INCH-POUND

MS27245R
27 March 2012
SUPERSEDING
MS27245P
27 November 2003

DETAIL SPECIFICATION SHEET

RELAYS, ELECTROMAGNETIC, 10 AMPERES, 2 PDT TYPE I, HERMETICALLY SEALED

INACTIVE FOR NEW DESIGN AFTER 5 JUNE 1987. NO SUPERSEDING SPECIFICATION. FOR NEW DESIGN, USE MIL-PRF-83536/9,10, 11.

This specification is approved for use by all Departments and Agencies of the Department of Defense.

The requirements for acquiring the relay described herein shall consist of this specification and the latest issue of MIL-PRF-6106.

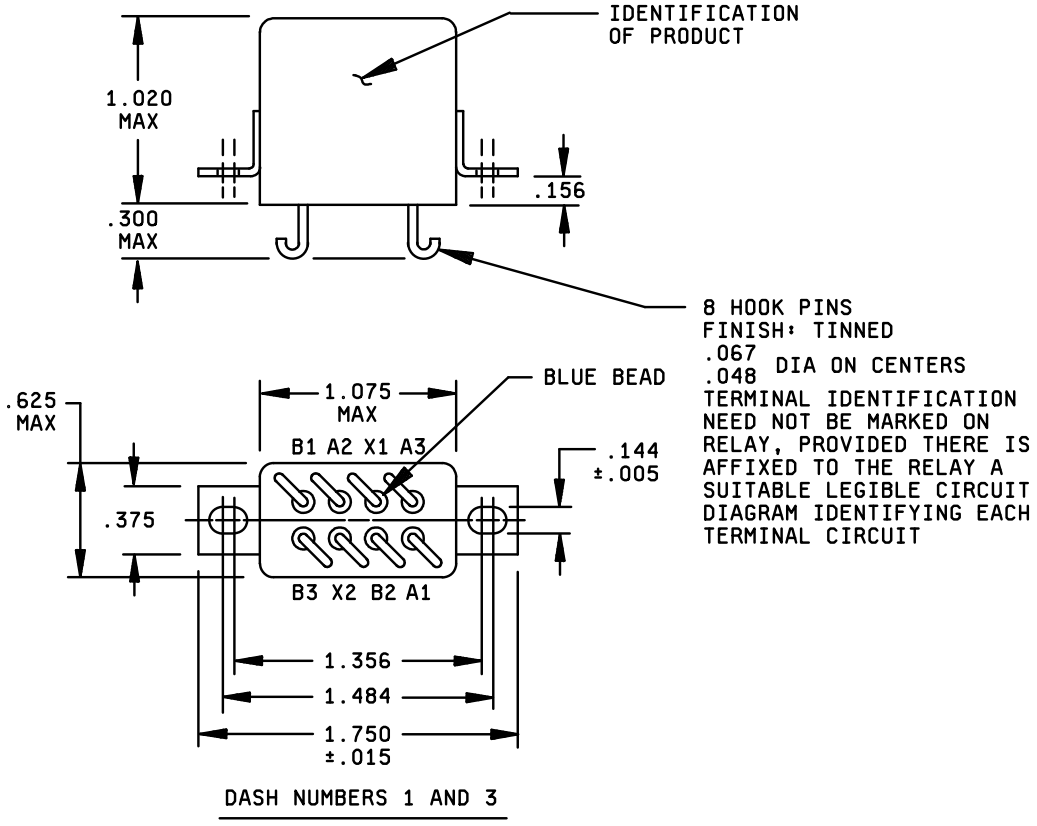

FIGURE 1. Dimensions and configuration.

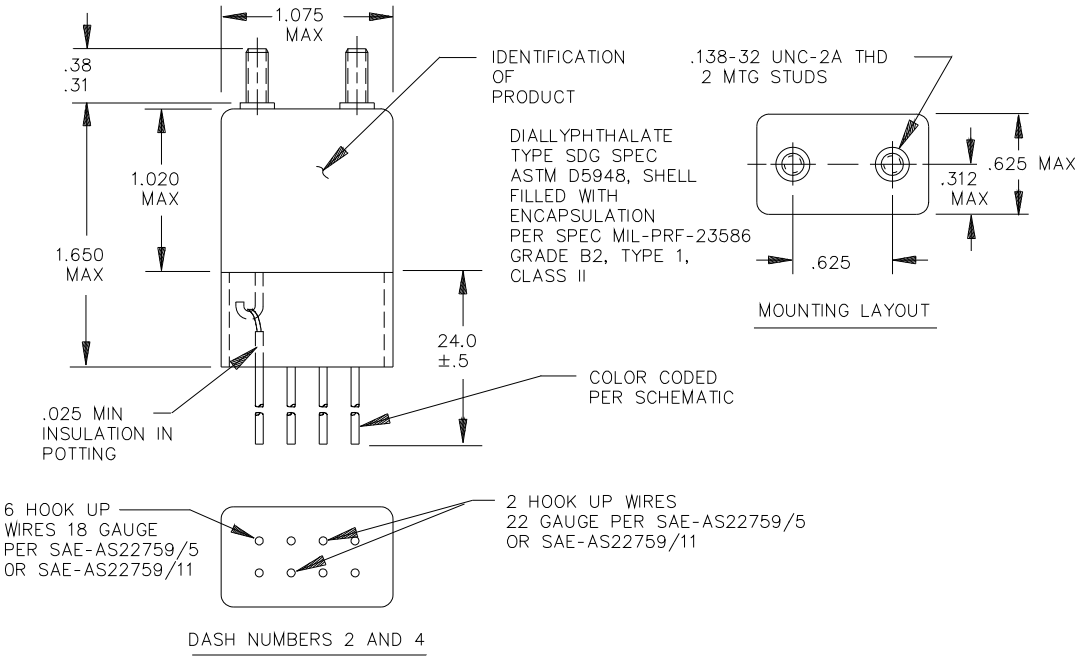

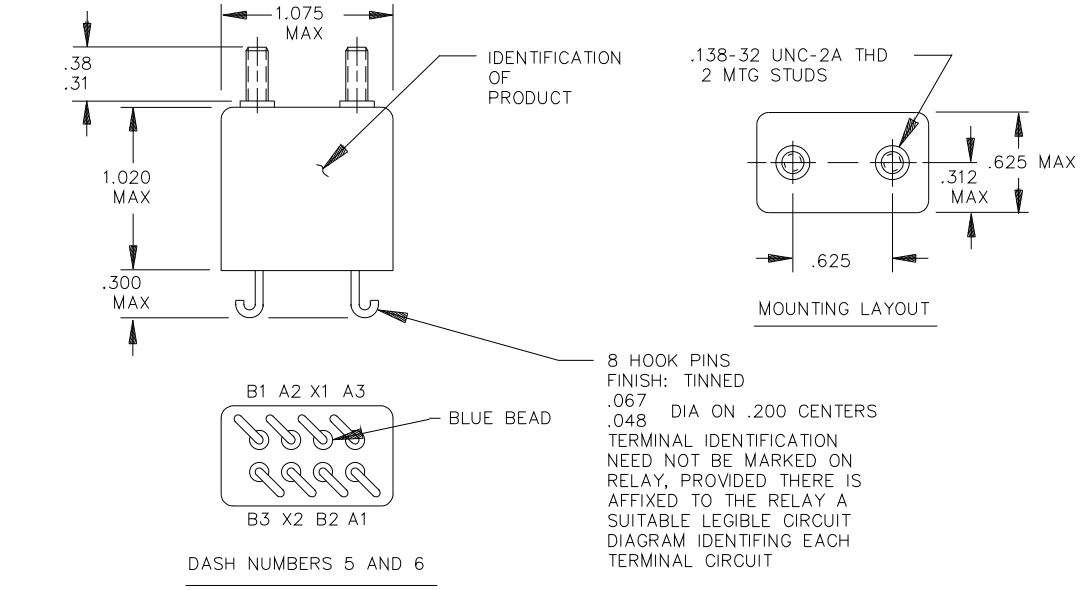

FIGURE 1. Dimensions and configurations - Continued

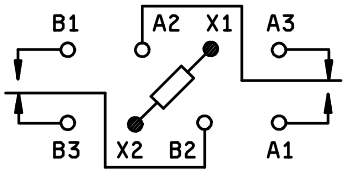

CIRCUIT DIAGRAM
(DASH NUMBERS 1,3,5 AND 6)

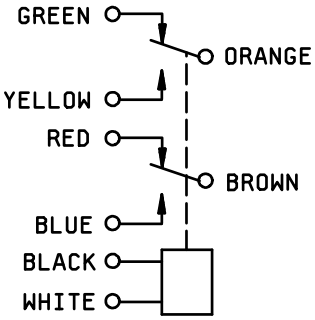

CIRCUIT DIAGRAM
(DASH NUMBERS 2 AND 4)

Inches	mm	Inches	mm	Inches	mm	Inches	mm
.005	0.13	.156	3.96	.38	9.7	1.020	25.91
.015	0.38	.25	6.4	.5	13.	1.356	34.44
.048	1.22	.257	6.53	.515	13.08	1.485	37.69
.067	1.70	.300	7.62	.625	15.88	1.650	41.91
.138	3.51	.31	7.9	1.000	25.40	1.750	44.45
.144	3.66	.375	9.52	1.015	25.78	24.0	610.

NOTES:
1. Dimensions are in inches.
2. Metric equivalents are given for general information only.
3. Unless otherwise specified, tolerance is ±.010 (0.25 mm).

FIGURE 1. Dimensions and configurations - Continued.

REQUIREMENTS:

Dimensions, and configurations: See figure 1.

ENVIRONMENTAL CHARACTERISTICS:

Temperature range: -70°C and +125°C.

Maximum altitude rating: 80,000 feet.

Shock g-level: 50 g's.

Duration: 11 ms.

Max duration contact opening: 10 μs.

Vibration - sinusoidal:

G-level: 20 g's.

Frequency range: 10 - 2,000 Hz.

Acceleration: 15 g's.

ELECTRICAL CHARACTERISTICS (SEE TABLES I, II, III, AND IV).

Insulation resistance, initial: 100 megohms.

After life or environmental tests: 50 megohms.

Dielectric strength (sea level):

	Initial	After life tests
Coil to case	1,000 V rms	1,000 V rms
Aux contacts	N/A	N/A
All other points	1,250 V rms	1,000 V rms

Dielectric strength (altitude): 80,000 feet.

	Initial	After life tests
Coil to case	N/A	350 V rms
Aux contacts	N/A	
All other points	N/A	350 V rms

Dash numbers and general characteristics: See table I.

Maximum contact drop initial: 0.150 volt (dash numbers 1 and 3), 0.375 volt (dash numbers 2, 4, 5, and 6).

After life test: 0.175 volt (dash numbers 1 and 3), 0.375 volt (dash numbers 2, 4, 5, and 6).

Overload current: 20 amperes, 28 V dc.

Rupture current: 40 amperes, 115 V ac, 400 Hz.

Duty rating: Continuous.

CONFORMANCE INSPECTION:

Performance of groups B and C tests are not applicable.

Group A acceptance reports shall be submitted to the qualifying activity on a yearly basis in order to retain qualification for this military specification sheet.

Qualification by similarity: See MIL-PRF-6106.

TABLE I. Dash numbers and characteristics.

PIN number MS27245-	Type	Coil	Terminal type	Mounting socket	Auxiliary contacts	Max weight in pounds
1	I	dc	Plug-in	Flange	N/A	0.08
2	I	dc	Plug-in	Stud	N/A	0.23
1/ 3	I	dc	Plug-in	Flange	N/A	0.08
4	I	dc	Printed wire (PW)	Stud	N/A	0.23
5	I	dc	Solder hook	Stud	N/A	0.23
6	I	dc	Solder hook	Stud	N/A	0.23

1/ All tests specified in each subgroup of the Group A inspection table of MIL-PRF-6106 are applicable to -3.

TABLE II. Operating characteristics.

PIN MS 27245-	Coil data											Time - (milliseconds maximum)					
	Coil	Nominal			Max		Max pick-up voltage			Hold vol-tage 2/	Drop out volt-age 2/	Oper-ate 3/	Rel-ease 4/	Contact Bounce			
														Main		Aux	
		Volts 1/	Freq Hz	Ω Res ±10%	Volts	Amp	Nor-mal 2/	High temp test	Cont cur-rent test					NO	NC	NO	NC
MS27245-1	X1,X2	28	dc	300	29	.12	18	18	19.8	7.0	1.0	10	10	2	5	---	---
MS27245-2	X1,X2	28	dc	300	29	.12	18	18	19.8	7.0	1.0	10	10	2	5	---	---
MS27245-3	X1,X2	28	dc	300	29	.12	18	18	19.8	7.0	1.0	10	10	2	5	---	---
MS27245-4	X1,X2	28	dc	300	29	.12	18	18	19.8	7.0	1.0	10	10	2	5	4	4
MS27245-5	X1,X2	28	dc	300	29	.12	18	18	19.8	7.0	1.0	10	10	2	5	---	---
MS27245-6	X1,X2	28	dc	300	29	.12	18	18	19.8	7.0	1.0	10	10	2	5	---	---

1/ Caution: Use of any coil voltage less than nominal coil voltage will compromise the operation of the relay.
2/ Over the temperature range.
3/ With rated coil voltage.
4/ From rated coil voltage.

TABLE III. Rated contact load (amperes per pole) (case grounded) (-1 and -3).

Type of load	Life operating cycles x 10^3	28 V dc				115 V ac, 1 phase				115/200 V ac, 3 phase 1/				See appropriate notes
		Main		Aux		Main		Aux		Main		Aux		
		NO	NC	NO	NC	400 Hz	60 Hz	400 Hz	60 Hz	400 Hz	60 Hz	400 Hz	60 Hz	
Resistive	100	10	10			10				10				
Inductive	100	4	4			4				4				
Inductive														
Motor	100	3	3			3				3				
Lamp	100	2	2			2				2				
Transfer load														2/
Mechanical life reduced current	400	2.5	2.5											
Mixed loads	50													3/

1/ 115/200 V ac for 60 Hz ratings, absence of value indicates relay is not rated for 3-phase applications.
2/ Transfer load indicates relay is suitable for transfer between unsynchronized ac power supplies at rating indicated.
3/ Minimum current ratings 0.1 ampere resistive, 0.3 ampere inductive, and 0.5 ampere resistive are applicable in accordance with acquisition specifications except monitored to a 3 ohm contact resistance.

TABLE IV. Rated contact load (amperes per pole) (case grounded) (-2, -4, -5, and -6).

Type of load	Life operating cycles x 10^3	28 V dc				115 V ac, 1 phase				115/200 V ac, 3 phase 1/ (Not applicable to -2 and -6)				See appropriate notes
		Main		Aux		Main		Aux		Main		Aux		
		NO	NC	NO	NC	400 Hz	60 Hz	400 Hz	60 Hz	400 Hz	60 Hz	400 Hz	60 Hz	
Resistive	50	10	10			10				10				
Inductive	50	6	6			6				4				
Inductive														
Motor	50	4	4			4				4				
Lamp	50	2	2			2				2				
Transfer load														2/
Mechanical life reduced current	400	2.5	2.5											
Mixed loads	50													3/

1/ 115/200 V ac for 60 Hz ratings, absence of value indicates relay is not rated for 3-phase applications.
2/ Transfer load indicates relay is suitable for transfer between unsynchronized ac power supplies at rating indicated.
3/ Minimum current ratings 0.1 ampere resistive, 0.3 ampere inductive, and 0.5 ampere resistive are applicable in accordance with acquisition specifications except monitored to a 3 ohm contact resistance.

Referenced documents. In addition to MIL-PRF-6106, this document references the following:

MIL-PRF-23586 SAE-AS22759/5 SAE-AS22759/11 ASTM-D5948

Custodians:
NAVY - EC
Air Force - 85
DLA - CC

Review activities:
Navy - AS

Preparing activity:
DLA - CC

(Project 5945-2012-008)

NOTE: The activities listed above were interested in this document as of the date of this document. Since organizations and responsibilities can change, you should verify the currency of the information above using the ASSIST Online database at https://assist.daps.dla.mil/.