INCH-POUND

MS27243M
8 October 2014
SUPERSEDING
MS27243L
13 November 2012

DETAIL SPECIFICATION SHEET

RELAY, 10 AMP, 4PDT, SEALED, CLASS O

This specification is approved for use by all Departments and Agencies of the Department of Defense.

The requirements for acquiring the relay described herein shall consist of this specification and the latest issue of MIL-PRF-6106.

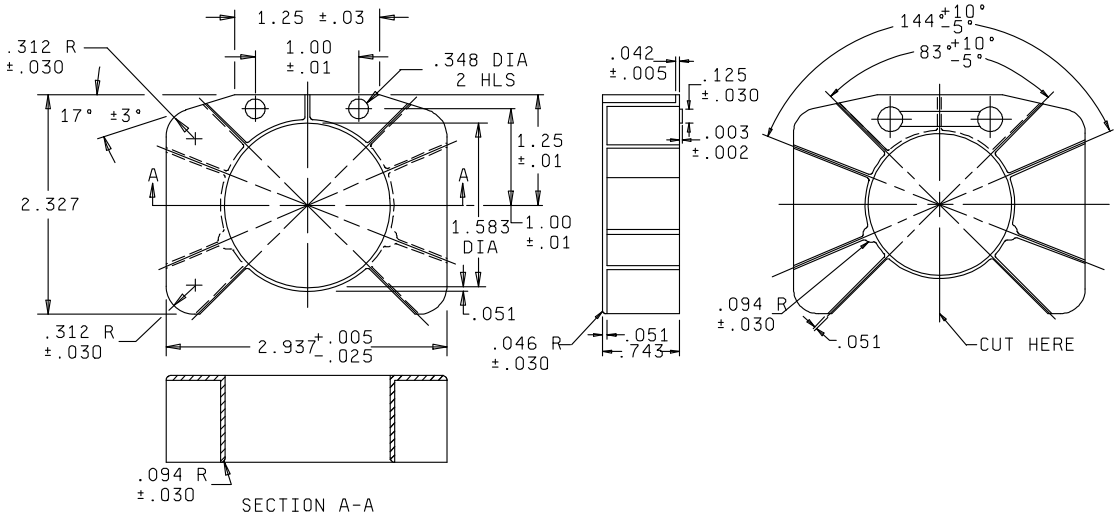

Terminal cover dash number	For use with relay
-1	MS24376-A1 -A2 -D1 -D2 MS24143-D1 -D2

FIGURE 1. Configurations and dimensions.

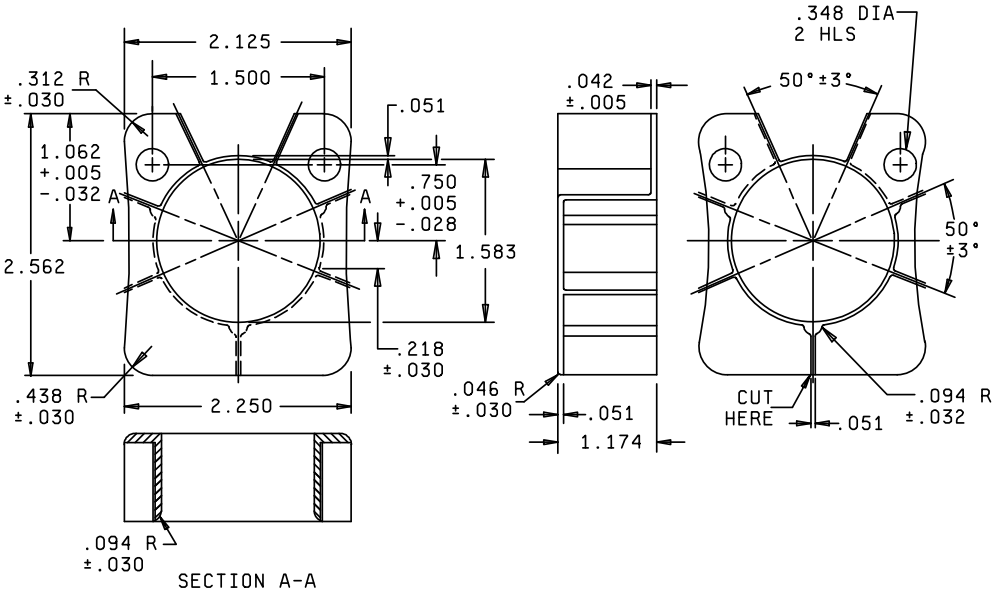

Terminal cover dash number	For use with relay
-2	MS24141-D1 -D2 MS24183-D1

FIGURE 1. Configurations and dimensions - Continued.

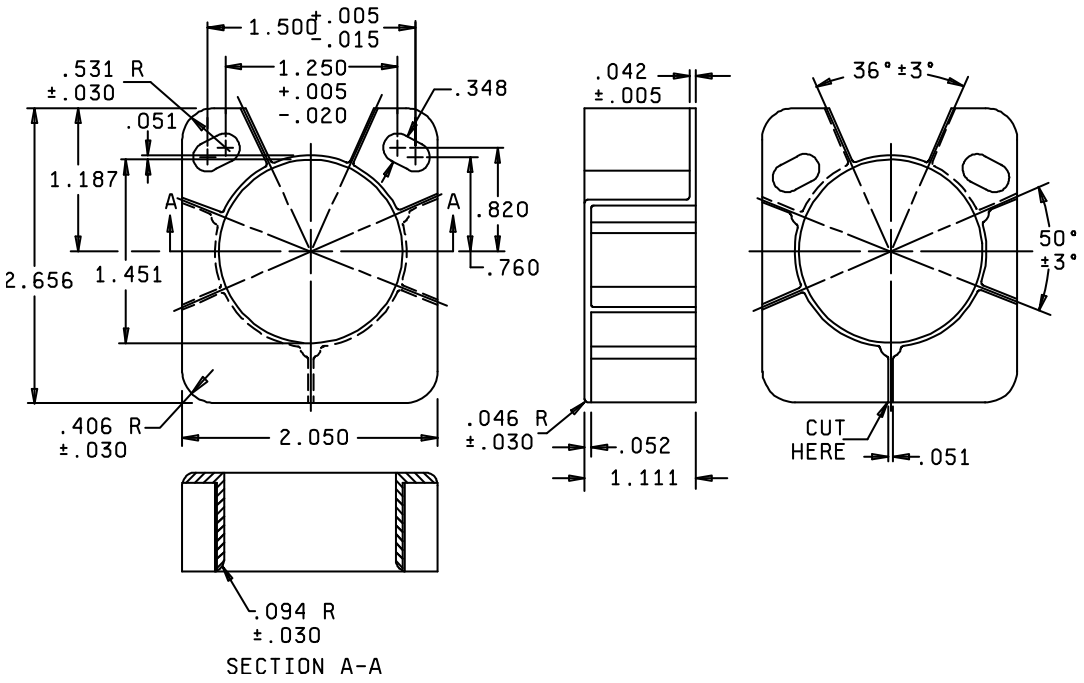

Terminal cover dash number	For use with relay
-3	MS24140-1 -2 -D1 -D2 MS24182-1 -D1

FIGURE 1. Configurations and dimensions - Continued.

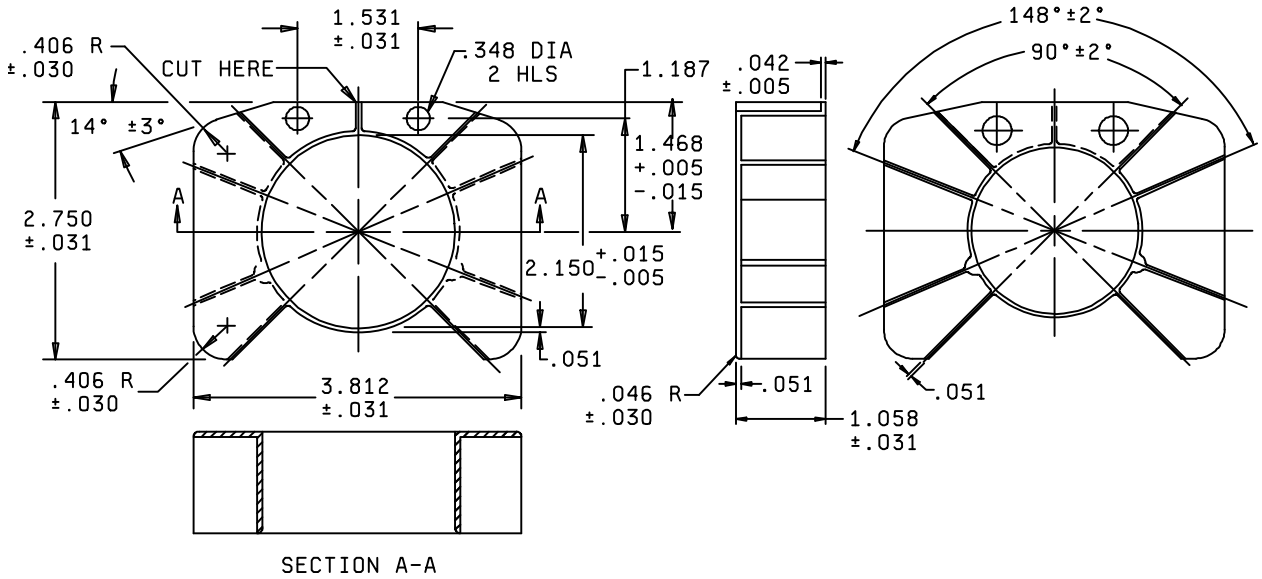

Terminal cover dash number	For use with relay
-4	MS24168-D1 -D2

FIGURE 1. Configurations and dimensions - Continued.

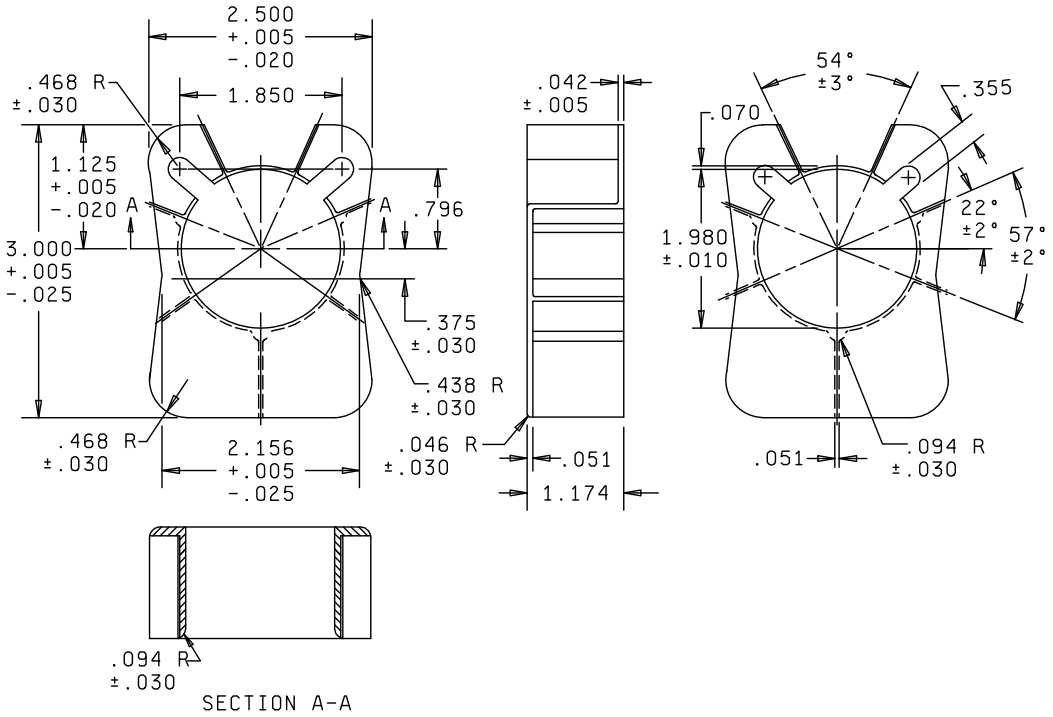

Terminal cover dash number	For use with relay
-5	MS24142-D1 -D2 MS24184-D2

FIGURE 1. Configurations and dimensions - Continued.

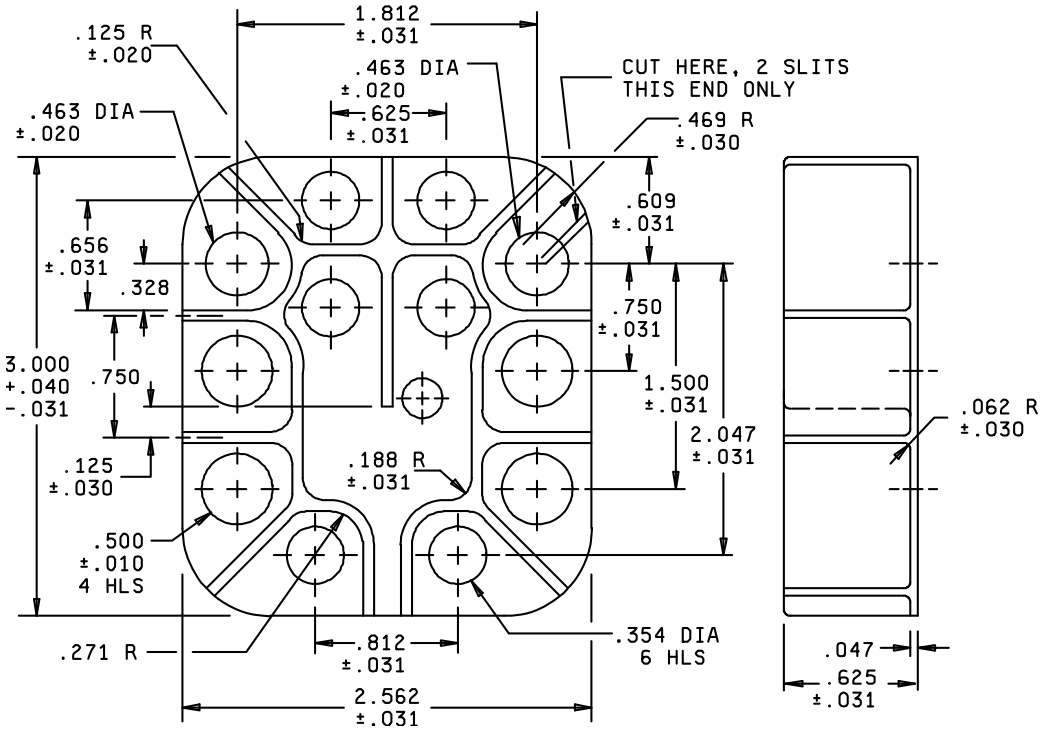

Terminal cover dash number	For use with relay
-6	MS27222-1 -2 MS27997-D1 -D2

FIGURE 1. Configurations and dimensions - Continued.

Inches	mm	Inches	mm	Inches	mm	Inches	mm
.002	0.05	.094	2.39	.531	13.49	1.531	38.89
.003	0.08	.125	3.18	.609	15.47	1.583	40.21
.005	0.13	.188	4.78	.625	15.88	1.850	46.99
.010	0.25	.218	5.54	.743	18.87	1.980	50.29
.01	0.3	.271	6.88	.750	19.05	2.047	51.99
.015	0.38	.312	7.92	.796	20.22	2.050	52.07
.020	0.51	.328	8.33	.812	20.62	2.150	54.61
.025	0.64	.348	8.84	1.000	25.40	2.250	57.15
.030	0.76	.354	8.99	1.058	26.87	2.327	59.11
.042	1.07	.355	9.02	1.062	26.97	2.562	65.07
.046	1.17	.375	9.52	1.111	28.22	2.656	67.46
.047	1.19	.406	10.31	1.174	29.82	2.750	69.85
.051	1.30	.438	11.13	1.187	30.15	2.937	74.60
.052	1.32	.463	11.76	1.250	31.75	3.000	76.20
.062	1.57	.468	11.89	1.468	37.29	3.812	96.82
.070	1.78	.500	12.70	1.500	38.10		

NOTES:
1. Dimensions are in inches.
2. Metric equivalents are given for general information only.
3. Unless otherwise specified, tolerance is ±.010 (0.25 mm).

FIGURE 1. Configurations and dimensions - Continued.

REQUIREMENTS

Dimensions and configurations: See figure 1.

Material: Nylon in accordance with ASTM-D4066, natural color.

Qualification: The qualifying requirements excluding examination of product and tests specified by MIL-PRF-6106 are not applicable to items covered by this specification.

Part or Identifying Number (PIN): MS27243 (plus dash number from figure 1).

Referenced documents. In addition to MIL-PRF-6106, this document references the following:

ASTM-D4066 MS24376 MS24143 MS24141 MS24183 MS24140 MS24182 MS24168 MS24142 MS24184

MS27222 MS27997

Changes from previous issue. The margins of this specification are marked with vertical lines to indicate where changes from the previous issue were made. This was done as a convenience only and the Government assumes no liability whatsoever for any inaccuracies in these notations. Bidders and contractors are cautioned to evaluate the requirements of this document based on the entire content irrespective of the marginal notations and relationship to the previous issue.

Custodians:
Navy – AS
Air Force - 85
DLA - CC

Review activity:
Air Force - 99

Preparing activity:
DLA - CC

(Project 5945-2014-022)

NOTE: The activities listed above were interested in this document as of the date of this document. Since organizations and responsibilities can change, you should verify the currency of the information above using the ASSIST Online database at https://assist.dla.mil.