INCH-POUND

MS25270L
26 June 2012
SUPERSEDING
MS25270K
27 November 2003

DETAIL SPECIFICATION SHEET

RELAYS, ELECTROMAGNETIC, 5 AMPERES, 6 PDT, TYPE I, POTTED LEAD, HERMETICALLY SEALED

INACTIVE FOR NEW DESIGN AFTER 5 JUN 1987. NO SUPERSEDING SPECIFICATION.

This specification is approved for use by all Departments and Agencies of the Department of Defense.

The requirements for acquiring the relay described herein shall consist of this specification and the latest issue of MIL-PRF-6106.

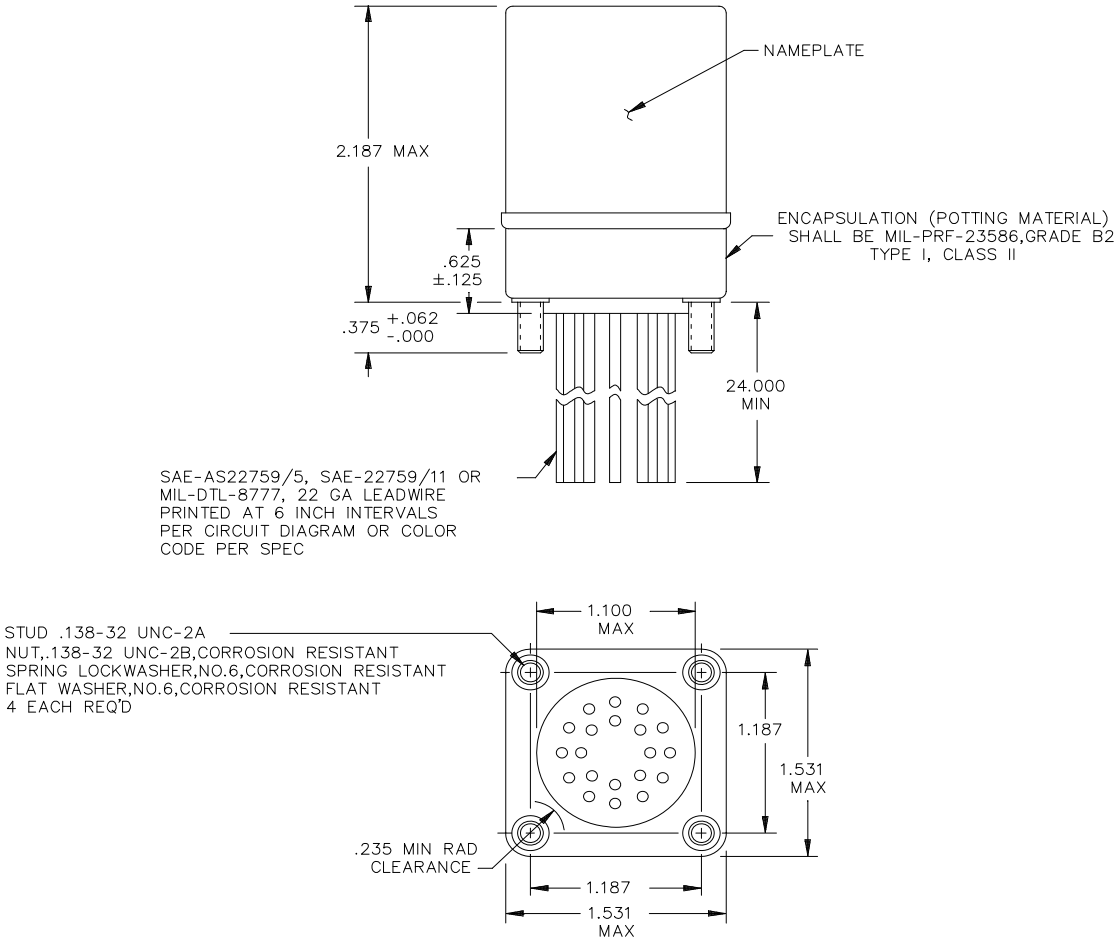

FIGURE 1. Dimensions and configurations.

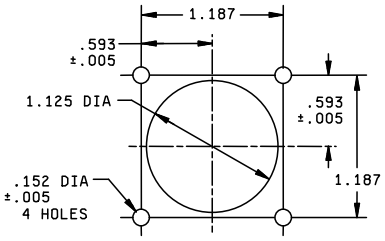

MOUNTING HOLE LAYOUT

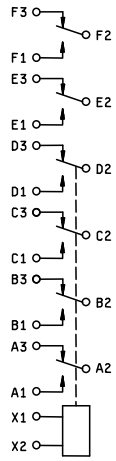

CIRCUIT D1-A1
SEE NOTE 5

NOTES:

1/ Dimensions are in inches.
2/ Metric equivalents are given for general information only.
3/ Unless otherwise specified, tolerance is ±.010 (0.25 mm).
4/ Terminal numbers need not appear on relay header provided there is affixed to the relay a suitable legible circuit diagram that permanently and positively identifies each terminal location specified hereon.
5/ The use of diodes on ac relays is optional. Actual application must be shown on label.
6/ In the event of conflict between the text of this specification and the references cited herein, the text of this specification shall take precedence.

Inches	mm
.005	0.13
.062	1.57
.125	3.18
.152	3.86
.235	5.97
.375	9.53
.025	15.88
1.100	27.94
1.187	30.15
1.531	38.89
2.187	55.55
24.00	609.60

FIGURE 1. Dimensions and configurations – Continued.

TABLE I. Dash numbers and characteristics.

Dash number MS25270-	Type	Coil	Terminal type	Mounting or mating socket	Max weight in pounds
D1	I	dc	Lead	Stud	.67
A1	I	ac	Lead	Stud	.67

TABLE II. Operating characteristics.

PIN MS25270-	Coil data											Time - milliseconds max					
	Coil	Rated			Max		1/ Max pick-up voltage			Hold voltage 2/	Drop out voltage 2/	Operate 3/	Release 4/	Contact Bounce			
														Main		Aux	
		Volts 1/	Freq Hz	Ω Res	Volts	Amp	Normal 2/	High temp test	Cont current test					NO	NC	NO	NC
D1	X1, X2	28	dc	N/A	29	0.18	18	19.8	22.5	7.0	1.5	20	20	2	2	N/A	N/A
A1	X1, X2	115	400 5/	N/A	122	0.04	90	95	103	30	5.0	25	50	2	2	N/A	N/A

1/ CAUTION: Use of any coil voltage less than rated coil voltage will compromise the operation of the relay.
2/ Over the temperature range.
3/ With nominal coil voltage.
4/ From nominal coil voltage.
5/ MS25270-A1 may be used on 60 Hz if maximum ambient temperature is +85°C (maximum coil current shall be 0.044 ampere).

TABLE III. Rated contact load (amperes per pole) (case grounded).

Type of load	Life operating cycles x 10^3	28 V dc				115 V ac, 1 phase				115/200 V ac, 3 phase 1/				See appropriate notes
		Main		Aux		Main		Aux		Main		Aux		
		NO	NC	NO	NC	400 Hz	60 Hz	400 Hz	60 Hz	400 Hz	60 Hz	400 Hz	60 Hz	
Resistive	100	5	5			5	4							
Inductive	100													
Inductive	20	3	3			3	2							
Motor	100	1.5	1.5			1.5	1							
Lamp	100	0.8	0.8			0.8	0.6							
Transfer load														2/
Mechanical life reduced current	400	1.25	1.25			1.25	1							
Mixed loads	Applicable per specification													

1/ Absence of value indicates relay is not rated for 3-phase application.
2/ Transfer load indicates relay is suitable for transfer between unsynchronized ac power supplies at rating indicated.

Environmental characteristics.

Temperature range	-70°C to +125°C
Max altitude rating	80,000 ft
Shock G-level	25 g's
Duration	11 ms
Max duration contact opening	10 µs
Vibration - sinusoidal (see chart below)	
G-level	10 g's
Frequency range	5-1,500 Hz

Vibration - random	
Applicable spec	N/A
Power spectral density	N/A
RMS G min	N/A
Frequency range	N/A
Curve	N/A
High shock	N/A
Acceleration	15 g's

Electrical characteristics.

Minimum insulation resistance, initial	100 megohms.
After life or environmental tests	50 megohms.

Dielectric strength (sea level).

	Initial	After life tests
Coil to case	1,050 V rms	1,000 V rms
Aux contacts		
All other points	1,050 V rms	1,000 V rms

Dielectric strength (altitude).

	80,000 ft
Coil to case	1,000 V rms
Aux contacts	
All other points	1,000 V rms

Max contact drop initial	0.150 volt.
After life test	0.175 volt.
Overload current	20 amperes.
Rupture current	25 amperes.
Duty rating	Continuous.
RFI specification	MIL-STD-461

(Applicable to coil circuits of ac operated relays).

Conformance inspection.

Performance of groups B and C tests are not applicable.

Group A acceptance reports shall be submitted to the preparing activity on a yearly basis in order to retain qualification for this military standard sheet.

Qualification by similarity: See MIL-PRF-6106.

NOTES

Changes from previous issue. The margins of this specification are marked with vertical lines to indicate where changes from the previous issue were made. This was done as a convenience only and the Government assumes no liability whatsoever for any inaccuracies in these notations. Bidders and contractors are cautioned to evaluate the requirements of this document based on the entire content irrespective of the marginal notations and relationship to the last previous issue.

Referenced documents. In addition to MIL-PRF-6106, this document references the following:

MIL-DTL-8777 MIL-PRF-23586 SAE-AS22759/5 SAE-AS22759/11 MIL-STD-461

Custodians:
Navy - AS
Air Force - 85
DLA - CC

Review activities:
Navy - EC

Preparing activity:
DLA - CC

(Project 5945-2012-009)

NOTE: The activities listed above were interested in this document as of the date of this document. Since organizations and responsibilities can change, you should verify the currency of the information above using the ASSIST Online database at https://assist.dla.mil/.