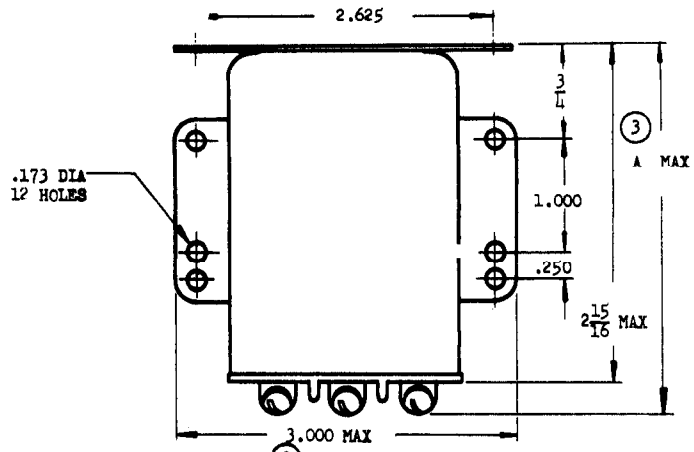

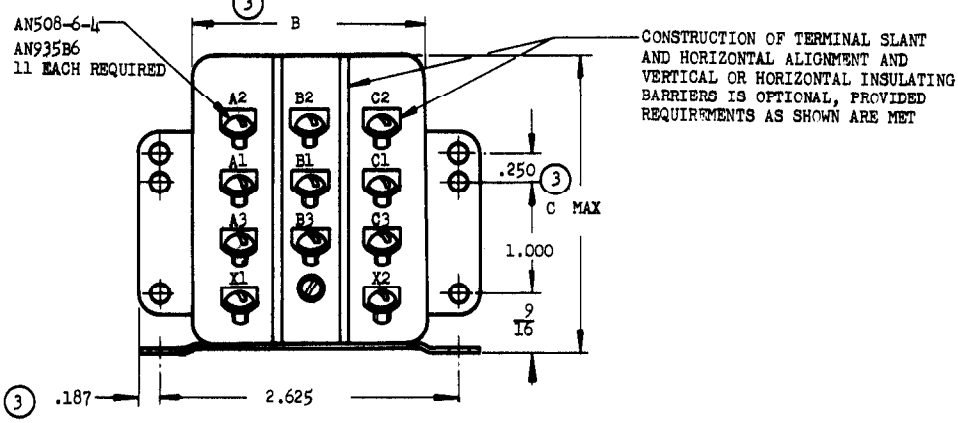

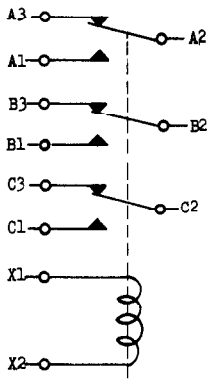

CIRCUIT

DETAIL REQUIREMENTS:

(A)	MAXIMUM OPERATING VOLTAGE	29 VOLTS
(B)	PICK-UP VOLTAGE	18 VOLTS
(C)	DROP-OUT VOLTAGE	7 VOLTS +0, -5.5
(D)	RATED LOAD: (PER POLE)	

LOAD	NORMALLY OPEN	NORMALLY CLOSED
RESISTIVE DC	10 AMP	10 AMP
RESISTIVE AC 400 CYCLES 115 VOLTS	10 AMP	10 AMP
INDUCTIVE	10 AMP	10 AMP
MOTOR	6 AMP	6 AMP

(E)	COIL CURRENT	0.35 AMP MAX
(F)	MINIMUM OPERATING PERIOD	3 HOURS
(G)	MINIMUM OPERATING CYCLES	50,000
(3) (H)	MAXIMUM WEIGHT	0.8 POUND
(I)	RATED DUTY	CONTINUOUS
(J)	NOMINAL COIL VOLTAGE	28 VOLTS

(3)

AN PART NO.	A (MAX)	B (MAX)	C (MAX)
AN3312-1	3-5/32	2-7/64	2-5/8
AN3312-2	3-5/16	2-13/64	2-11/16

INACTIVE FOR DESIGN AFTER 14 MARCH 1955. USE MS25024.

(3) PART NUMBER AN3312-2 RELAY SHALL MEET MINIMUM CURRENT REQUIREMENTS ESTABLISHED IN THE PROCUREMENT SPECIFICATION.

FOR DEFINITION AND APPLICATION OF DRAWING STATUS NOTES, SEE ANA BULLETIN NO. 337.

DIMENSIONS IN INCHES. UNLESS OTHERWISE SPECIFIED, TOLERANCES: FRACTIONS ±1/64, DECIMALS ±.010.

OVERLOAD, RUPTURE, AND CONTACT DROP TESTS OF SPECIFICATION MIL-R-6106 ARE NOT APPLICABLE TO PART NUMBER AN3312-1 RELAY.

APPROVED 10 Jul 50 REVISED (1) 14 Mar 55 (2) 10 Apr 56 (3) 27 Jul 56

PROCUREMENT SPECIFICATION	AIR FORCE-NAVY AERONAUTICAL STANDARD	AN3312
MIL-R-6106	RELAY, 10 AMP, 3PDT, SEALED, CLASS O	

SUPERSEDES USAF DRAWING 50B7503

NOTE: This drawing was approved by joint action of the Air Personnel Navy Departments as the Air Force-Navy standard for this product. This drawing supersedes all concurrent standard drawings for the same product and shall become effective for the procurement of aeronautical supplies, or for use in any design, not later than 6 months after the latest date of approval shown.

⚠ ⚠: When Government drawings, specifications, or other data are used for any purpose other than in connection with a definitely related Government procurement operation, the United States Government thereby incurs no responsibility, nor any obligation whatsoever; and the fact that the Government may have formulated, furnished, or in any way supplied the said drawings, specifications, or other data is not to be regarded by implication or otherwise as in any manner licensing the holder or any other person or corporation, or conveying any rights or permission to manufacture, use, or sell any patented invention that may in any way be related thereto.