INCH-POUND

MIL-PRF-55339C
w/ AMENDMENT 1
16 April 2008
SUPERSEDING
MIL-PRF-55339C
3 August 2005

PERFORMANCE SPECIFICATION

ADAPTERS, CONNECTORS, COAXIAL, RADIO FREQUENCY, (BETWEEN SERIES AND WITHIN SERIES), GENERAL SPECIFICATION FOR

This specification is approved for use by all Departments and Agencies of the Department of Defense.

1. SCOPE

1.1 Scope. This specification covers the performance requirements and tests for between series and within series, radio frequency (RF), coaxial connector adapters.

1.2 Classification. Adapters consist of the following classes with the Part Identifying Number (PIN), as specified (see 3.1).

a. Class 1 – A class 1 adapter is an adapter which is intended to provide superior RF performance at specified frequencies, and for which all RF characteristics are completely defined.

b. Class 2 – A class 2 adapter is intended to provide mechanical connection within an RF circuit providing specified RF performance.

1.2.1 PIN. The PIN consists of the letter “M” followed by the basic specification sheet number. The first digit in the dash number designates the material and finish of the adapter body (shell); i.e., “0” for silver plated brass, “3” for passivated corrosion-resistant steel, “4” for gold plated copper beryllium, “6” to be used between series SMA and other series (SMA body to be corrosion resistant steel and the other series to be brass), or "7" for nickel plated brass. Succeeding digits will be assigned to designate the former ‘UG’ number or a nonsignificant number, as applicable.

Example:

M55339/ 01 - XXXXX

General specification

Specification sheet

Dash number from specification sheet

Comments, suggestions, or questions on this document should be addressed to Defense Supply Center Columbus, ATTN: VAI, P.O. Box 3990, Columbus OH 43218-3990 or email to RFConnectors@dscc.dla.mil. Since contact information can change, you may want to verify the currency of this address information using the ASSIST Online database at http://assist.daps.dla.mil.

AMSC N/A FSC 5935

2. APPLICABLE DOCUMENTS

2.1 General. The documents listed in this section are specified in sections 3, 4, or 5 of this specification. This section does not include documents cited in other sections of this specification or recommended for additional information or as examples. While every effort has been made to ensure the completeness of this list, document users are cautioned that they must meet all specified requirements of documents cited in sections 3, 4, or 5 of this specification, whether or not they are listed.

2.2 Government documents.

2.2.1 Specifications, standards, and handbooks. The following specifications, standards, and handbooks form a part of this document to the extent specified herein. Unless otherwise specified, the issues of these documents are those cited in the solicitation or contract.

FEDERAL STANDARDS

FED-STD-H28 - Screw-Thread Standards for Federal Services.

COMMERCIAL ITEM DESCRIPTIONS

A-A-59588 - Rubber, Silicone.

DEPARTMENT OF DEFENSE SPECIFICATIONS

MIL-PRF-39012 - Connectors, Coaxial, Radio Frequency, General Specification For

DEPARTMENT OF DEFENSE STANDARDS

MIL-STD-130 - Identification Marking of U.S. Military Property.
MIL-STD-202 - Electronic and Electrical Component Parts.
MIL-STD-348 - Radio Frequency Connector Interfaces For MIL-C-3643, MIL-C-3650, MIL-C-3655, MIL-C-25516, MIL-C-26637, MIL-PRF-39012, MIL-PRF-49142, MIL-PRF-55339, MIL-C-83517.
MIL-STD-889 - Dissimilar Metals.

(Copies of these documents are available online at http://assist.daps.dla.mil/quicksearch/ or http://assist.daps.dla.mil or from the Standardization Documents Order Desk, 700 Robbins Avenue, Building 4D, Philadelphia, PA 19111-5094.)

2.3 Non-Government publications. The following documents form a part of this document to the extent specified herein. Unless otherwise specified, the issues of these documents are those cited in the solicitation or contract.

ASTM INTERNATIONAL

ASTM A342/A342M - Standard Test Methods for Permeability of Feebly Magnetic Materials
ASTM A484/B484M - Steel, Bars, Billets and Forgings, Stainless
ASTM A582/B582M - Free-Machining Stainless and Heat-Resisting Steel Bars
ASTM B16/B16M - Rod, Brass, Free-Cutting, Bar and Shapes for use in Screw Machines
ASTM B36/B36M - Plate, Brass, Sheet, Strip, and Rolled Bar
ASTM B88 - Tube, Water, Seamless Copper
ASTM B121/B121M - Plate, Leaded Brass, Sheet, Strip, and Rolled Bar

ASTM B124/B124M - Copper and Copper Alloy Forging Rod, Bar, and Shapes
ASTM B139/B139M - Rod, Phosphor Bronze, Bar, and Shapes
ASTM B152/B152M - Copper Sheet, Strip, Plate, and Rolled Bar
ASTM B194 - Copper-Beryllium Alloy Plate, Sheet, Strip and Rolled Bar
ASTM B196/B196M - Rod and Bar, Copper-Beryllium Alloy
ASTM B197/B197M - Wire, Alloy, Copper-Beryllium
ASTM B455 - Standard Specification for Copper-Zinc-Lead Alloy (Leaded-Brass) Extruded Shapes.
ASTM B488 - Gold for Engineering Uses, Electrodeposited Coatings of
ASTM B700 - Electrodeposited Coatings of Silver for Engineering Uses
ASTM D2116 - Molding and Extrusion Materials, FEP-Fluorocarbon
ASTM D4894 - Polytetrafluoroethylene (PTFE) Grandular Molding and RAM Extrusion Materials
ASTM D4895 - Polytetrafluoroethylene (PTFE) Resins Produced From Dispersion

(Copies of these documents are available from http://www.astm.org or ASTM International, P.O. Box C700, 100 Barr Harbor Drive, West Conshohocken, PA 19428-2959.)

ASME INTERNATIONAL

ASME B46.1 – Surface Texture (Surface Roughness, Waviness, and Lay.

(Copies of these documents are available online at http://www.asme.org or from the ASME International, Three Park Avenue, New York, NY 10016-5990.)

INSTITUTE OF ELECTRICAL AND ELECTRONICS ENGINEERS, INC. (IEEE)

IEEE 287 – Standard For Precision Coaxial Connectors.

(Copies of these documents are available online from http://www.corporate-communication@ieee.org or from the IEEE Operations Center, 445 Hoes Lane, Piscataway, New Jersey 08854-1331.)

SAE INTERNATIONAL

SAE-AMS-QQ-N-290 - Nickel Plating (Electrodepositied).
SAE-AMS2700 - Steels, Passivation of Corrosion Resistant.

(Copies of these documents are available online at http://www.sae.org or from the SAE World Headquarters, 400 Commonwealth Drive, Warrendale, PA 15096-0001.)

2.4 Order of precedence. In the event of a conflict between the text of this document and the references cited herein (except for related specification sheets), the text of this document takes precedence. Nothing in this document, however, supersedes applicable laws and regulations unless a specific exemption has been obtained.

3. REQUIREMENTS

3.1 Specification sheets. The individual item requirements shall be as specified herein and in accordance with the applicable specification sheets. In the event of any conflict between requirements of this specification and the specification sheet, the latter shall govern.

3.2 Qualification. Adapters furnished under this specification shall be products that are authorized by the qualifying activity for listing on the applicable qualified products list before contact award (see 4.3, 6.3)

3.3 Critical interface material. Material shall be specified herein and in table I. If materials other than those specified are used, the contractor shall certify to the qualifying activity that the substitute material enables the adapters to meet the requirements of this specification. Acceptance or approval of any constituent material shall not be construed as a guaranty of the acceptance of the product. When a definite material is not specified, a material shall be used which will enable the adapters to meet the requirements of this specification. Any substitute materials shall be non-hazardous and permit the adapter to meet the requirements of section 3 of this specification.

TABLE I. Materials.

Component material	Applicable specification
Steel	ASTM A484/B484M, ASTM A582/B582M
Brass	ASTM B16/B16M, ASTM B36/B36M, ASTM B121/B121M
Copper beryllium	ASTM B194, ASTM B196/B196M, ASTM B197/B197M, ASTM B455
Phosphor bronze	ASTM B139/B139M
Soft copper	ASTM B152/B152M
Copper	ASTM B88, ASTM B124/B124M
PTFE fluorocarbon	ASTM D4894 and ASTM D4895
FEP fluorocarbon	ASTM D2116
Silicon rubber	A-A-59588

3.3.1 Critical interface materials and finish. Unless otherwise specified (see 3.1), adapter center contacts and bodies shall be plated in the following manner in order to meet the requirements of this specification and avoid detrimental interactions between dissimilar metals.

3.3.1.1 Center contacts. The male pin shall be plated to a minimum gold thickness of 50 micro inches (1.27 micro meters) in accordance with ASTM B488, type II code C, class 1.27, over 50 micro inches (1.27 micro meters) minimum of nickel in accordance with SAE-AMS-QQ-N-290, class 1, measured anywhere along the mating surface, for all series. The socket contact shall be plated to a minimum of 50 micro inches (1.27 micro meters) of gold in accordance with ASTM B488, type II, code C, class 1.27, over 50 micro inches minimum of nickel in accordance with SAE-AMS-QQ-N-290, class 1, including the I.D., measured at a depth of .040 inch (1.01mm) minimum. The plating on non-significant surfaces in the I.D. shall be of sufficient thickness to ensure plating continuity and uniform utility and protection. This plating may consist of an underplate only. A silver underplate shall not be permitted on any contact, pin or socket.

3.3.1.2 Adapter bodies. All brass bodied adapters shall be silver plated in accordance with ASTM B700 to a minimum thickness of 0.000200 inch (0.005 mm) over a copper underplate, or nickel plated in accordance with SAE-AMS-QQ-N-290, 0.000200 inch (0.005mm), minimum. All copper beryllium bodied adapters shall be gold plated to a minimum thickness of 50 micro inches (1.27 μm) in accordance with ASTM B488, type II, code C, class 1.27 over a copper flash. All corrosion resistant steel bodied adapters shall be passivated in accordance with SAE-AMS2700, unless otherwise specified (see 3.1). NOTE: Ferrous or nickel alloys shall not be used on brass or copper beryllium bodied adapters (i.e., coupling nut, etc.).

3.3.2 Dissimilar metals. Dissimilar metals between which an electromotive couple may exist shall not be placed in contact with each other. Reference is made to MIL-STD-889 for definition of dissimilar metals.

3.3.3 Nonmagnetic materials. All parts (except hermetic sealed adapters and connector hardware) shall be made from materials which are classed nonmagnetic (see 3.9).

3.3.4 Spring members. Unless otherwise specified (see 3.1), center contact spring members shall be made of copper beryllium.

3.3.5 Recycled, recovered, or environmentally preferable materials. Recycled, recovered, or environmentally preferable materials should be used to the maximum extent possible, provided that the material meets or exceeds the operational and maintenance requirements, and promotes economically and advantageous life cycle costs.

3.4 Configuration and features. Adapters shall be of the configuration and physical dimensions specified (see 3.1). The nominal impedance, working voltage, frequency range, and temperature range shall be as specified (see 3.1).

3.4.1 Mating (visual indication). When applicable, a visual means for indicating complete mating shall be as specified (see 3.1).

3.4.2 Screw threads. Screw threads shall be in accordance with FED-STD-H28 unless otherwise specified (see 3.1).

3.4.3 Adapter interfaces. Adapter interfaces shall be in accordance with MIL-STD-348 unless otherwise specified (see 3.1).

3.5 Center contact retention. When adapters are tested as specified in 4.5.2, the center contacts shall withstand the axial force specified (see 3.1). The center contact shall meet the mating interface dimensions. When a torque requirement is specified (see 3.1) there shall be no rotation of the center contact.

3.6 Force to engage/disengage (see 4.5.3).

3.6.1 Bayonet and threaded types. When tested as specified in 4.5.3.1, the torque necessary to completely couple or uncouple the adapters shall not exceed that specified (see 3.1). Also the longitudinal force necessary to initiate the engaging or disengaging cycle shall not exceed that specified (see 3.1).

3.6.2 “Push on” adapter types (with or without detents). When tested as specified in 4.5.3.2, the forces necessary to fully engage or disengage the adapter shall not exceed that specified (see 3.1).

3.7 Coupling proof torque (threaded adapters). When tested as specified in 4.5.4, the coupling mechanism shall not be dislodged, and the adapter shall meet requirements of 3.6.1. The interface dimensions of the adapter shall remain as specified (see MIL-STD-348).

3.8 Mating characteristics. When adapters are tested as specified in 4.5.5, the mating dimensions shall be gauged as specified (see 3.1) and the dimensions shall remain within the specified tolerances (see 3.1).

3.9 Permeability of nonmagnetic materials. When adapters (except hermetic sealed and connector hardware) are tested as specified in4.5.6 , the permeability (Mu) shall be less than 2.0.

3.10 Hermetic seal (pressurized adapters only). When adapters are tested as specified in 4.5.7, the leakage rate shall not exceed that specified (see 3.1).

3.10.1 Leakage (pressurized adapters only). When adapters are tested as specified in 4.5.7.1, there shall be no leakage as detected by escaping air bubbles.

3.11 Insulation resistance. When adapters are tested as specified in 4.5.8 , the insulation resistance shall not be less than that specified (see 3.1).

3.12 Voltage standing wave ratio (VSWR). When adapters are tested as specified in 4.5.9, the VSWR shall not exceed that specified over the frequency range specified (see 3.1).

3.13 RF leakage. When adapters are tested as specified in 4.5.10, the total leakage shall not exceed that specified (see 3.1).

3.14 RF insertion loss. When adapters are tested as specified in 4.5.11, the insertion loss shall not exceed that specified (see 3.1).

3.15 Adapter durability. When adapters are tested as specified in 4.5.12, they shall show no evidence of severe mechanical damage and the coupling device shall remain functional. Adapters shall meet the applicable requirements of 3.6 and 3.8.

3.16 Dielectric withstanding voltage. When adapters are tested as specified in 4.5.13, there shall be no evidence of breakdown.

3.17 Contact resistance. When adapters are tested as specified in 4.5.14, the contact resistance of the center contact and outer contact shall be as specified (see 3.1).

3.18 Vibration. When adapters are tested as specified in 4.5.15, there shall be no electrical interruptions exceeding 1 microsecond (μs), or as otherwise specified (see 3.1). There shall be no evidence of visual mechanical damage after the test, and the contact resistance of the center contact shall not exceed the specified amount (see 3.1 and 3.17).

3.19 Shock (specified pulse). When adapters are tested as specified in 4.5.16, there shall be no electrical interruptions exceeding 1 μs unless otherwise specified (see 3.1). There shall be no evidence of visual or mechanical damage after the test, and the contact resistance of the center contact shall not exceed the specified amount (see 3.1).

3.20 Thermal shock. After testing as specified in 4.5.17, there shall be no evidence of visual mechanical damage to the adapter and it shall meet the dielectric withstanding voltage requirement (see 3.16), and the contact resistance specified for the center contact shall not be exceeded (see 3.1 and 3.17).

3.21 Moisture resistance. When adapters are tested as specified in 4.5.18 , there shall be no evidence of damage. They shall withstand the dielectric withstanding voltage specified (see 3.16), and the insulation resistance shall not be less than that specified (see 3.11).

3.22 Corona level. When adapters are tested as specified in 4.5.19, at the altitude and voltage specified (see 3.1), there shall be no evidence of sustained corona discharge.

3.23 RF high potential withstanding voltage. When adapters are tested as specified in 4.5.20, there shall be no breakdown, and the leakage current specified shall not be exceeded (see 3.1).

3.24 Corrosion (Salt spray). When adapters are tested as specified in 4.5.21, there shall be no exposure of the base metal on the interface or mating surface, and they shall meet the requirements of 3.6.1 or 3.6.2 as applicable.

3.25 Coupling mechanism retention force. When tested as specified in 4.5.22, the coupling mechanism shall not be dislodged from the adapter and shall be capable of meeting the requirements of 3.6.1 immediately after the test.

3.26 Marking. Adapters and associated fittings shall be permanently and legibly marked in accordance with the general marking requirements of MIL-STD-130 with the PIN (see 1.2.1), manufacturer's federal supply code, and final assembly date code. The marking location is optional; when practicable, a location should be picked that will allow the marking to be visible after installation. Marking is required on all parts manufactured to this specification unless specifically excepted (see 3.1).

3.27 Workmanship. Adapters and associated fittings shall be processed in such a manner as to be uniform in quality and shall be free from sharp edges, burrs and other defects that will affect life, serviceability or appearance.

3.28 Safety wire hole pullout. When applicable (see 3.1), adapters are to be tested as specified in 4.5.23. There shall be no evidence of hole tear out.

4. VERIFICATION

4.1 Classification of inspections. The inspection requirements specified herein are classified as follows:

a. Qualification inspection (see 4.3).
b. Conformance inspection (see 4.4).
c. Periodic inspection (see 4.4.2).

4.2 Inspection conditions. Unless otherwise specified, all inspections shall be performed in accordance with the test conditions specified in the "GENERAL REQUIREMENTS" of MIL-STD-202. For each test of threaded coupling connectors, where the test is performed on mated pairs, the pair shall be torqued to the specified value (see 3.1).

4.3 Qualification inspection. Qualification inspection shall be performed at a laboratory acceptable to the Government (see 6.3) on sample units produced with equipment and procedures normally used in production.

4.3.1 Sample size. Ten class 1 adapters of the same PIN, or six class 2 adapters of the same PIN, shall be subjected to the qualification inspection.

4.3.2 Group qualification. For group qualification of all series of adapters covered by this specification (see 3.1). The Government reserves the right to authorize performance of any or all qualification inspections of additional types in the group that are considered necessary for qualification within each group.

4.3.3 Inspection routine. The sample shall be subjected to the inspections specified in table II. All sample units shall be subjected to the inspection of group I. The sample units shall then be divided equally into two groups of 5 units (class 1) or three units each (class 2) and subjected to the inspection for their particular group and in the sequence given for that group.

4.3.4 Failures. One or more failures shall be cause for refusal to grant qualification approval.

4.3.5 Retention of qualification. To retain qualification, the contractor shall verify in coordination with the qualifying activity the capability of manufacturing products which meet the performance requirements of this specification. Refer to the qualifying activity for the guidelines necessary to retain qualification to this particular specification. The contractor shall immediately notify the qualifying activity at any time that the inspection data indicates failure of the qualified product to meet the performance requirements of this specification.

NOTE: In the event that no production occurred during the reporting period, a report shall be submitted certifying that the company still has the capabilities and facilities necessary to produce the item. If during 3 consecutive reporting periods there has been no production, the manufacturer may be required, at the discretion of the qualifying activity, to submit a representative product from each group, as defined by 4.3.2 to testing in accordance with the qualification inspection requirements.

4.3.6 Extension of qualification. Manufacturers who have products listed on QPL-39012 and produce adapters of the same series, may apply to the qualifying activity for extension of qualification to this specification, provided the interfacial coupling, materials and plating of the adapter and connectors are identical, and the adapter successfully meets the requirements of groups I and II in table II.

TABLE II. Qualification inspection.

Inspection	Requirement paragraph	Test method paragraph
Group I		
Visual and dimensional inspection:		
Visual inspection	3.1, 3.3, 3.4 3.26 and 3.27	4.5.1.1
Dimensional inspection	3.1	4.5.1.2
Center contact retention	3.5	4.5.2
Force to engage/disengage	3.6	4.5.3
Coupling proof torque (threaded adapters)	3.7	4.5.4
Mating characteristics	3.8	4.5.5
Permeability (not applicable to hermetic-sealed adapters)	3.9	4.5.6
Workmanship	3.27	4.5.1.1
Hermetic seal (pressurized adapters only)	3.10	4.5.7
Leakage (pressurized adapters only)	3.10.1	4.5.7.1
Insulation resistance	3.11	4.5.8
Group II		
VSWR	3.12	4.5.9
RF leakage 1/	3.13	4.5.10
RF insertion loss 1/	3.14	4.5.11
Adapter durability	3.15	4.5.12
Force to engage/disengage	3.6	4.5.3
Coupling proof torque (threaded adapters)	3.7	4.5.4
Mating characteristics	3.8	4.5.5
VSWR	3.12	4.5.9
Dielectric withstanding voltage	3.16	4.5.13
Group III		
Contact resistance (center contact)	3.17	4.5.14
Vibration, high frequency 1/	3.18	4.5.15
Contact resistance (center contact)	3.17	4.5.14
Shock (specified pulse) 1/	3.19	4.5.16
Contact resistance (center contact)	3.17	4.5.14
Dielectric withstanding voltage	3.16	4.5.13
Contact resistance (center contact)	3.17	4.5.14
Thermal shock (hermetic sealed adapters)	3.20	4.5.17
Dielectric withstanding voltage	3.16	4.5.13
Contact resistance (center contact)	3.17	4.5.14
Moisture resistance	3.21	4.5.18
Dielectric withstanding voltage	3.16	4.5.13
Corona level 1/	3.22	4.5.19
Hermetic seal (pressurized adapters only)	3.10	4.5.7
Leakage (pressurized adapters only)	3.10.1	4.5.7.1
RF high potential withstanding voltage 1/	3.23	4.5.20
Corrosion (Salt spray)	3.24	4.5.21
Force to engage/disengage	3.6	4.5.3
Coupling mechanism retention force (when applicable see 3.1)	3.25	4.5.22
Force to engage/disengage	3.6	4.5.3

1/ These tests to be performed only during initial qualification as long as the qualifying design and manufacturing process has not been changed.

4.4 Conformance inspection.

4.4.1 Inspection of product for delivery. Inspection of product for delivery shall consist of groups A and B inspection.

4.4.1.1 Inspection lot. An inspection lot shall consist of all adapters of the same PIN produced under essentially the same conditions, and offered for inspection at one time.

4.4.1.2 Group A inspection. Group A inspection shall consist of the inspections specified in table III in the order shown.

4.4.1.2.1 Sampling plan (group A). Table III, tests shall be performed on a production lot basis. Samples shall be selected in accordance with table IV. If one or more defects are found, the lot shall be screened for that particular defect and defects removed. A new sample of parts shall be selected in accordance with table IV and all group A tests again performed. If one or more defects are found in the second sample, the lot shall be rejected and shall not be supplied to this specification.

TABLE III. Group A inspection.

Inspection	Requirement paragraph	Test method paragraph	Sampling procedure
Visual inspection	3.1, 3.3, 3.4 3.26 and 3.27	4.5.1.1	
Dimensional inspection	3.1	4.5.1.2	See table IV
Hermetic seal	3.10	4.5.7	
Leakage	3.10.1	4.5.7.1	
Dielectric withstanding voltage	3.16	4.5.13	

4.4.1.2.2 Visual inspection (group A inspection). Each adapter shall be visually examined for completeness, workmanship, and identification requirements. Attention shall be given to those assemblies that require a gasket to determine the condition of the gasket. Gaskets missing, twisted, buckled, kinked, or damaged in any way shall be cause for rejection.

TABLE IV. Group A Sampling Plan.

Lot size	Visual and mechanical inspection
1 to 19	All
20 to 280	20
281 to 1,200	47
1,201 to 3,200	53
3,201 to 10,000	68
10,001 to 35,000	77
35,001 to 150,000	96
150,001 to 500,000	119
500,001 and over	143

4.4.1.3 Group B inspection. Group B inspection shall consist of the inspections specified in table V in the order shown, and shall be made on sample units which have been subjected to and passed the group A inspection. Adapters having identical piece parts may be combined for lot purposes and shall be in proportion to the quantity of each PIN numbered adapter produced.

4.4.1.3.1 Group B sampling plan. A sample of parts shall be randomly selected in accordance with table VI. If one or more defects are found, the lot shall be screened for that particular defect and defects removed. After screening and removal of defects, a new sample of parts shall be randomly selected and subjected to all tests in accordance with table V. If one or more defects are found in the second sample, the lot shall be rejected and shall not be supplied to this specification.

TABLE V. Group B Inspection.

Inspection	Requirement paragraph	Test method paragraph
Center contact retention	3.5	4.5.2
Force to engage/disengage	3.6	4.5.3
Coupling proof torque (threaded adapters)	3.7	4.5.4
Force to engage/disengage (threaded adapters)	3.6.1	4.5.3.1
Mating characteristics	3.8	4.5.5
Permeability (not applicable to hermetic-sealed adapters or connector hardware)	3.9	4.5.6
Insulation resistance	3.11	4.5.8
VSWR	3.12	4.5.9
Contact resistance (center and outer contacts)	3.17	4.5.14

TABLE VI. Group B Sampling Plan.

Lot size	Sample size	VSWR sample size
1 to 4	All	1
5 to 15	5	1
16 to 90	5	3
91 to 150	11	3
151 to 280	13	3
281 to 500	16	3
501 to 1,200	19	5
1,201 to 3,200	23	5
3,201 to 10,000	29	5
10,001 to 35,000	35	5
35,001 and over	40	8

4.4.1.3.2 Disposition of sample units. Sample units which have passed all the group B inspection may be delivered on the contract or purchase order, if the lot is accepted. Any adapter deformed or otherwise damaged during testing shall not be delivered on the contract or order.

4.4.2 Periodic inspection. Periodic inspection shall consist of group C. Except where the results of these inspections show noncompliance with the applicable requirements (see 4.4.2.1.4), delivery of products which have passed groups A and B shall not be delayed pending the results of these periodic inspections.

4.4.2.1 Group C inspection. Group C inspection shall consist of the inspections specified in table VII, in the order shown. Group C inspection shall be made on sample units selected from inspection lots which have passed the groups A and B inspection.

4.4.2.1.1 Sampling plan. Six sample units of the same PIN shall be selected from the first lot produced after the date of notification of qualification. Thereafter, six sample units of the same part number shall be selected from current production after 200,000 adapters have been produced, or not less than once every three years, whichever occurs first. The sample units shall be divided equally and subjected to the inspections of the two subgroups.

4.4.2.1.2 Failures. If one or more sample units fail to pass group C inspection, the lot shall be considered to have failed.

4.4.2.1.3 Disposition of sample units. Sample units which have been subjected to group C inspection shall not be delivered on the contract or order.

4.4.2.1.4 Noncompliance. If a sample fails to pass group C inspection, the manufacturer shall notify the qualifying activity and the cognizant inspection activity of such failure and take corrective action on the materials or processes, or both, as warranted, and on all units of product which can be corrected and which are manufactured under essentially the same materials and processes, and which are considered subjected to the same failure. Acceptance and shipment of the product shall be discontinued until corrective action, acceptable to the qualifying activity has been taken. After the corrective action has been taken, group C inspection shall be repeated on additional sample units (all tests and examinations, or the test which the original sample failed, at the option of the qualifying activity). Groups A and B inspections may be reinstituted; however, final acceptance and shipment shall be withheld until the group C inspection has shown that the corrective action was successful. In the event of failure after reinspection, information concerning the failure shall be furnished to the cognizant inspection activity and the qualifying activity.

TABLE VII. Group C inspection. 1/

Inspection	Requirement Paragraph	Test method paragraph
Subgroup 1		
VSWR	3.12	4.5.9
RF leakage 2/	3.13	4.5.10
RF insertion loss 2/	3.14	4.5.11
Durability	3.15	4.5.12
Force to engage/disengage	3.6	4.5.3
Coupling proof torque	3.7	4.5.4
Mating characteristics	3.8	4.5.5
VSWR	3.12	4.5.9
Dielectric withstanding voltage	3.16	4.5.13
Subgroup 2		
Contact resistance (center and outer contacts)	3.17	4.5.14
Vibration, high frequency 2/	3.18	4.5.15
Contact resistance (center contact)	3.17	4.5.14
Shock (specified pulse) 2/	3.19	4.5.16
Contact resistance (center contact)	3.17	4.5.14
Dielectric withstanding voltage	3.16	4.5.13
Contact resistance (center contact)	3.17	4.5.14
Thermal shock (hermetic-sealed adapters)	3.20	4.5.17
Dielectric withstanding voltage	3.16	4.5.13
Contact resistance (center contact)	3.17	4.5.14
Moisture resistance	3.21	4.5.18
Dielectric withstanding voltage	3.16	4.5.13
Corona level 2/	3.22	4.5.19
Hermetic seal	3.10	4.5.7
Leakage	3.10.1	4.5.7.1
RF high potential withstanding voltage 2/	3.23	4.5.20
Corrosion (salt spray)	3.24	4.5.21
Force to engage/disengage	3.6	4.5.3
Coupling mechanism retention force	3.25	4.5.22
Force to engage/disengage	3.6	4.5.3

1/ Manufacturers who have products listed on QPL-39012 and produce adapters of the same series, may apply to the qualifying activity for a waiver in performing group C, subgroup 2, retention testing, providing the interfacial coupling, materials and plating of the adapter and connector are identical.

2/ These tests are to be performed during initial qualification only, as long as the qualifying design, materials and manufacturing process has not been changed.

4.5 Methods of inspection.

4.5.1 Test methods. The following identified tests and test methods assure adapter integrity within typical operating conditions and applications. Alternate commercial industry standard test methods are allowed; however when an alternate method is used, the qualifying activity must be notified prior to the performance of the test. The test methods described herein are proven methods and shall be the referee method in case of dispute.

4.5.1.1 Visual and mechanical examination. Adapters and associated fittings shall be examined to verify that the design, construction, physical dimensions, assembly instructions, marking and workmanship are in accordance with the applicable requirements (see 3.1, 3.3, 3.4, 3.26, and 3.27).

4.5.1.2 Dimensional examination. Mating dimensions shall be examined by mating the adapter with its applicable mating gauges or other suitable means acceptable to the Government.

NOTE: The documents listed in supplement 1 show the overall dimensions of the connector when assembled to the appropriate cable, and the detail mating dimensions at the interface. No other dimensions or details will be shown. The cable-end construction and other dimensions are controlled by performance requirements of the specification, i.e., cable retention, VSWR, RF leakage, etc., with cable in place.

4.5.2 Center contact retention (see 3.5). An axial force (see 3.1) shall be applied to the center contact of an unmated adapter. This force shall be applied at a rate of approximately 1 pound (4.448 N) per second until the specified force has been reached. The force shall be applied for a minimum period of 5 seconds. After removal of specified force, the axial location of the center contact at each end shall be determined. Each mating end of the adapter shall be tested. The torque specified (see 3.1) shall be applied to the center contact of an unmated adapter for a minimum period of 10 seconds. Each mated end of the adapter shall be tested.

4.5.3 Force to engage/disengage (see 3.6).

4.5.3.1 Bayonet and threaded types (see 3.6.1). The adapter shall be engaged with its mating standard part (see 3.1). During the entire coupling/uncoupling cycle (until the adapter is fully engaged/disengaged) the forces and/or torques necessary shall not exceed those specified (see 3.1). A thread coupled adapter is fully engaged with its mating standard part when their reference planes (see 3.1) coincide. A bayonet coupled adapter is fully engaged with its mating standard part when the bayonet studs have passed the detent and their reference planes coincide. No additional tightening torque shall be applied. The mating standard part is a steel jig containing the critical interface dimensions finished to the tolerances specified, or a qualified mating connector with the approval of the qualifying activity (see 3.1). Its spring members when applicable shall be heat treated beryllium copper. The surface finish or mating surfaces shall be 16 microinches maximum, in accordance with ASME B46.1.

4.5.3.2 “Push-on” connector types (see 3.6.2). The adapter under test shall be engaged with its standard mating part (gauge). During this engaging cycle the force necessary to fully engage the adapters shall not exceed that specified (see 3.1). Upon completion of engagement, an opposite force necessary for disengagement shall be applied. This force shall be within the limits specified, and shall include any unlatching forces required.

4.5.4 Coupling proof torque (see 3.7). The adapter under test shall be engaged with its mating standard part (gauge) and the coupling nut tightened to the torque value specified (see 3.1). After one minute the connector under test and its mating standard part shall be disengaged.

4.5.5 Mating characteristics (see 3.8). After insertion of the specified oversize pin the specified number of times (see 3.1), the contact to be tested shall be held rigid by means of a suitable jig or fixture, or a qualified mating connector with the approval of the qualifying activity. A gauge containing the test pin or test ring and a suitable force indicating dial shall be aligned to within 0.004 TIR of any plane passing through the axis of the contact under test. Engagement or withdrawal of the test pin or test ring shall be made smoothly and at such a rate that the dial does not bounce or otherwise give a false reading. The test pin or test ring may be chamfered to facilitate entry, but the specified engagement length shall not include the chamfer length and the finish shall be as specified and in accordance with ASME B46.1.

4.5.6 Permeability of nonmagnetic materials (see 3.9). The permeability of the adapter shall be measured with an indicator conforming to ASTM A342/A342M.

4.5.7 Hermetic seal (see 3.10). The unmated adapters shall be tested in accordance with method 112, MIL-STD-202. The following details shall apply:

a. Method of mounting – in its normal manner in specified mounting hole (see 3.1).
b. Test condition letter. C.
c. Procedure number. I.
d. Leakage rate sensitivity: 10^{-8} cubic centimeters per second.

4.5.7.1 Leakage (pressurized) (see 3.10.1). The unmated adapter shall be mounted in its normal manner in the specified mounting hole (see 3.1) on a closed container. The specified air pressure (see 3.1) shall be applied to the interior of the container. The exposed portion of the adapter under pressure shall be fully immersed in water or alcohol-water mixture and observed for 1 minute minimum.

4.5.8 Insulation resistance (see 3.11). Adapters shall be tested in accordance with method 302, test condition B of MIL-STD-202. Measured between the center contact and body.

4.5.9 VSWR (see 3.12). The VSWR shall be measured in accordance with the following procedure or a method acceptable to the Government. In the event of dispute the method outlined herein shall be used. Diagrams for the swept frequency VSWR system check out and measurement procedures are shown on figure 1.

In the basic measurement setup on figure 1, detector 1 provides a feedback signal to the swept RF source in order to normalize the output signal of detector 2. The frequency-amplitude characteristics of detectors 1 and 2 should be matched within .5 dB.

To measure VSWR several sweeps are made with the slotted line probe incrementally positioned over at least a half wave length at the lowest frequency of interest. In this manner an X-Y display is generated whose upper and lower envelope limits represent maximum and minimum amplitudes of the standing wave for each frequency in the test band. A base line may be generated by making a sweep with no input to the measurement channel amplifier. The resultant X-Y display is calibrated according to the characteristics of the measurement channel detector and amplifier, e.g., linear, square law, logarithmic, etc. VSWR shall be measured with each end of the adapter under test as input.

The VSWR test system is checked out by successively terminating the slotted line with the elements shown in steps 1, 2, and 3 sweeping the frequency over the specified test band (see 3.1). In step 1 the system VSWR shall be less than 1.02 + .004 F (F measured in GHz). In steps 2 and 3, the system VSWR shall be as specified (see 3.1).

The standard precision adapter interface shall conform to IEEE 287. Item 6 (standard precision adapters) shall not exceed the specified VSWR requirements (see 3.1). Standard test adapter designs shall be approved by the military qualifying agency.

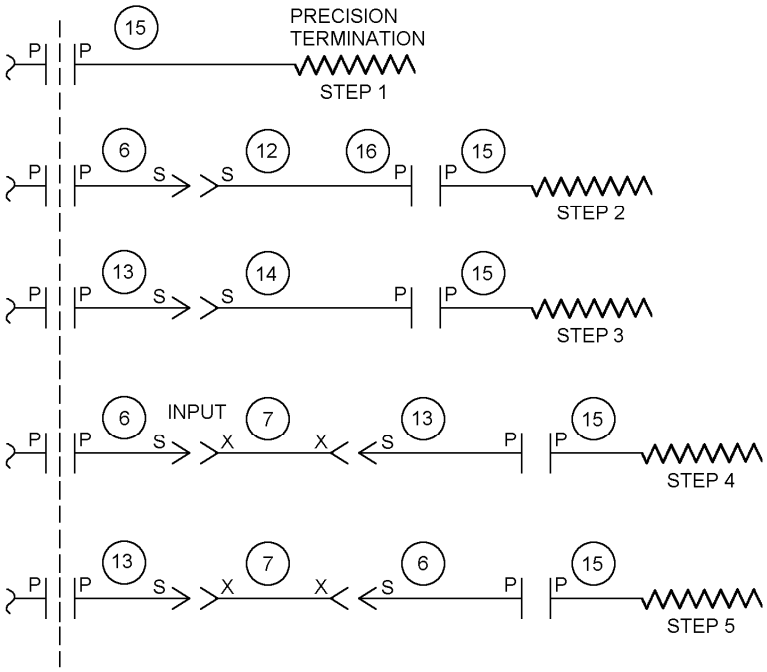

1. SWEPT RF SOURCE
2. ISOLATING DEVICE
3. RF PROBE OR POWER DIVIDER
4. ISOLATING DEVICE
5. SLOTTED LINE WITH PRECISION HERMAPHRODITIC OUTPUT CONNECTOR RESIDUAL VSWR LESS THAN 1.006 +.003F (F IN GHz)
6. STANDARD PRECISION ADAPTER HAVING STANDARD TEST CONNECTOR INTERFACE (SEE MIL-STD-348) COMPATIBLE WITH INPUT CONNECTOR INTERFACE OF ADAPTER UNDER TEST
7. ADAPTER UNDER TEST
8. DETECTOR NO. 2
9. AMPLIFIER
10. X - Y DISPLAY
11. DETECTOR NO. 1
12. STANDARD PRECISION ADAPTER HAVING STANDARD TEST CONNECTOR INTERFACE COMPATIBLE WITH ITEM 6
13. STANDARD PRECISION ADAPTER HAVING STANDARD TEST CONNECTOR INTERFACE COMPATIBLE WITH OUTPUT CONNECTOR INTERFACE OF ADAPTER UNDER TEST
14. STANDARD PRECISION ADAPTER HAVING STANDARD TEST CONNECTOR INTERFACE COMPATIBLE WITH ITEM 13
15. PRECISION HERMAPHRODITIC TERMINATION. VSWR LESS THAN 1.009 +.002 (F IN GHz)

FIGURE 1. Swept frequency VSWR test.

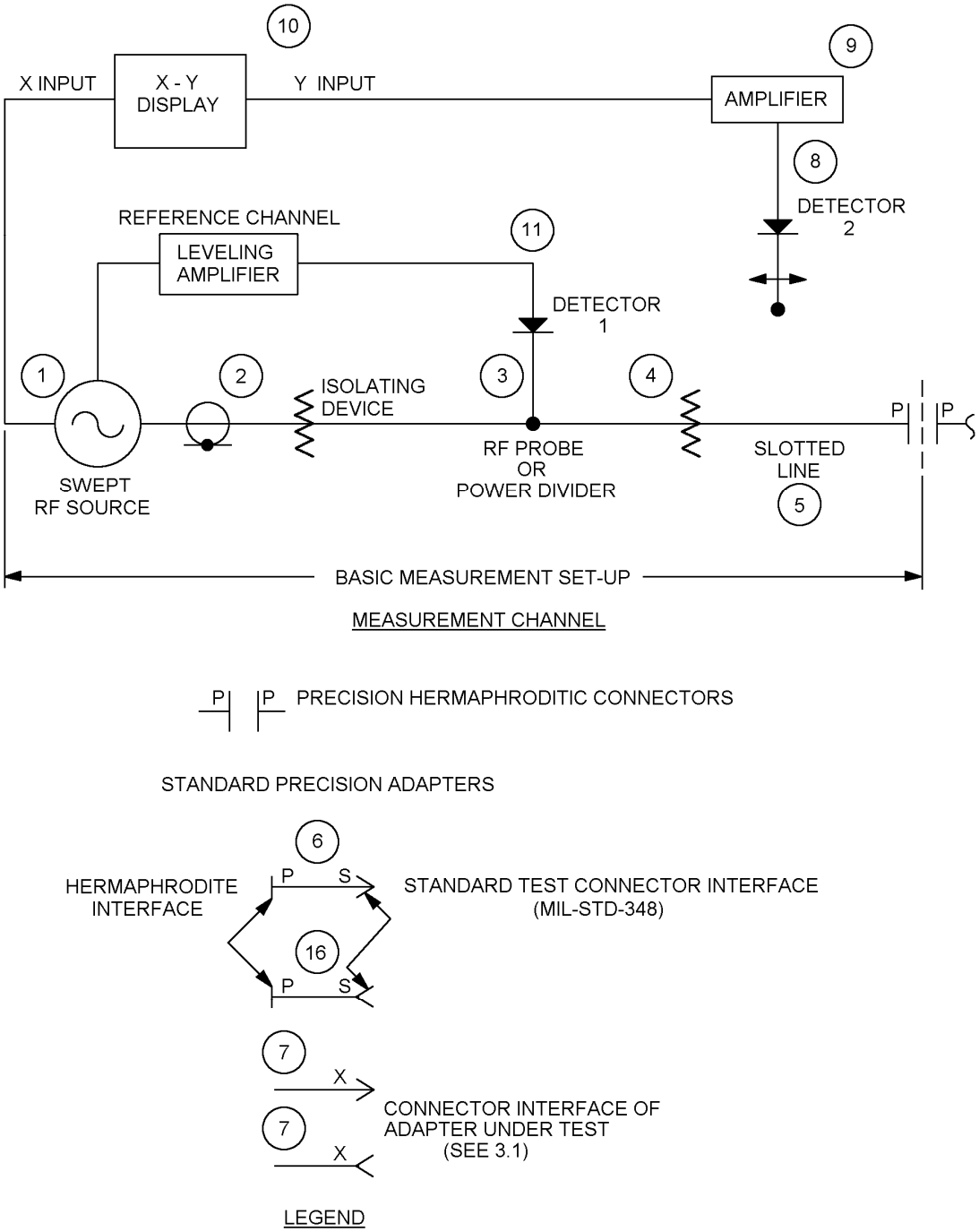

FIGURE 1. Swept frequency VSWR test – Continued.

4.5.10 RF leakage (see 3.13). The mating adapter pair to be tested shall be assembled as shown on figure 2 and tested as shown on figure 3. The brass tubing shall be machined to attach to the hermaphroditic cable connectors. This test setup between 500 MHz and 11 GHz, shall have a dynamic range from –20 dBm to better than –100 dBm or a difference of 90 dB. Using +20 dBm RF source with 10 dB isolation, an additional 30dB range can be obtained by use of attenuator pads or a step attenuator producing a total range of 120 dB. The shorting plunger is adjusted to produce a maximum reading in the detector with the triaxial assembly inserted. To check the residual RF leakage of the standard test connectors, the following three-step checkout procedure shall be performed:

Step 1 – Items 1 and 2 on figure 4 shall be inserted in the triaxial assembly. The RF leakage at the frequency of interest of this combination shall be measured.

Step 2 – Items 1, 3, 4, and 2 shall be inserted in the triaxial assembly as shown on figure 4, and the RF leakage shall be measured.

Step 3 – Items 1, 6, 5, and 2 shall be inserted in the triaxial assembly, and the RF leakage shall be measured.

To perform the measurement on the adapter under test, items 1, 3, 7, 5, and 2 on figure 4 shall be inserted in the triaxial assembly and the total RF leakage of the adapter at both its interfaces shall be measured.

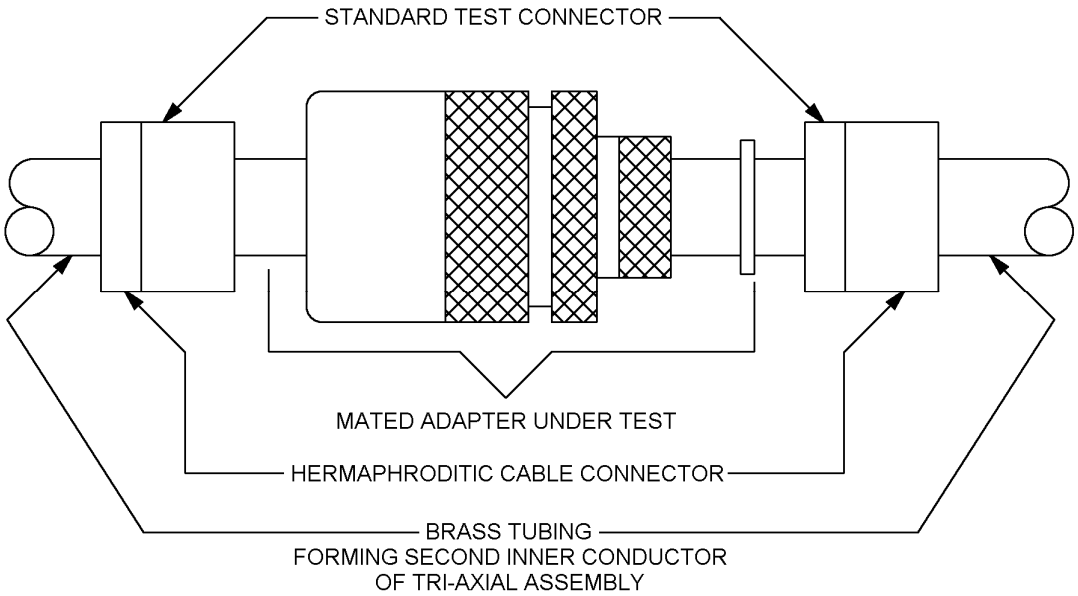

FIGURE 2. Triaxial test assembly for RF leakage.

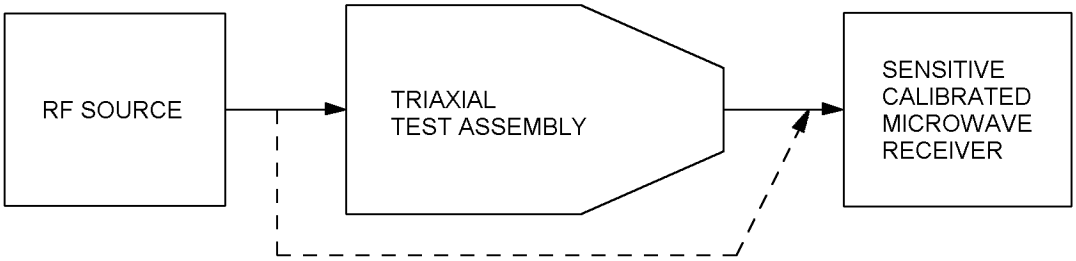

FIGURE 3. Triaxial test set-up for RF leakage.

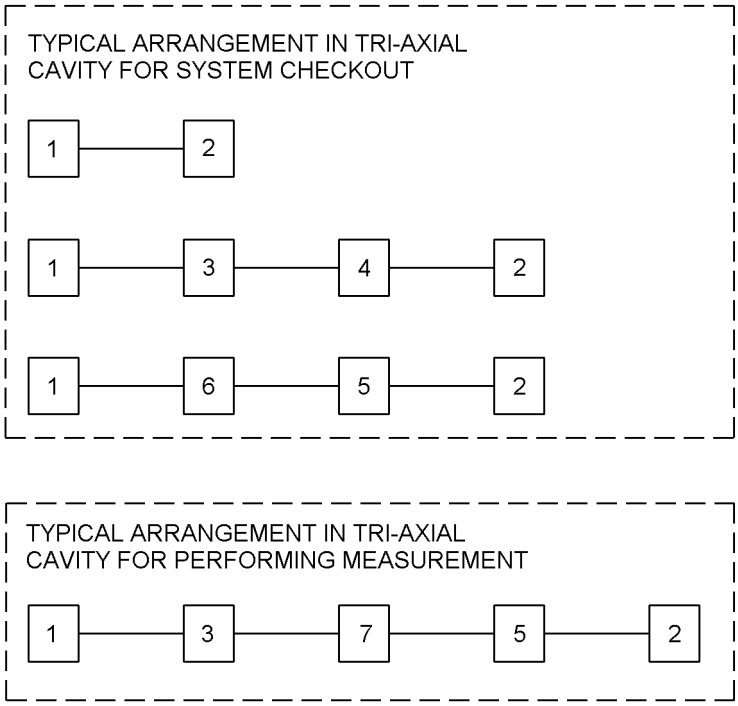

ITEM:

1. Cable connector with hermaphroditic output fitting.
2. Cable connector with hermaphroditic input fitting compatible with output fitting of item 1.
3. Standard test connector with hermaphroditic input fitting compatible with output fitting of item 1, and output interface compatible with input interface of adapter to be tested.
4. Standard test connector of opposite sex to item 3, and hermaphroditic output fitting compatible with input fitting of item 2.
5. Standard test connector with hermaphroditic output fitting compatible with input fitting of item 2, and input interface compatible with output interface of adapter to be tested.
6. Standard test connector of opposite sex to item 5, and hermaphroditic input fitting compatible with output fitting of item 1.
7. Adapter to be tested.

FIGURE 4. Typical triaxial arrangement.

4.5.11 RF insertion loss (see 3.14). The adapter shall be tested as shown on figure 5. Included in the insertion loss of the adapter is the reflection and dissipating loss of two standard test connectors – one for each interface of the adapter under test. Before performing the measurement on the adapter under test, the following two-step checkout procedure shall be performed:

Step 1 – The insertion loss of item 1 and 2 on figure 5 shall be measured.

Step 2 – The insertion loss of items 4 and 3 shall be measured.

To perform the measurement on the adapter under test, items 1, 5, and 3 shall be inserted as shown, and the insertion loss shall be measured.

Note: Slotted line with low residual reflection, hermaphroditic output fitting compatible with tuner #3 input fitting. VSWR less than 1.006 + .003F (F in GHz).

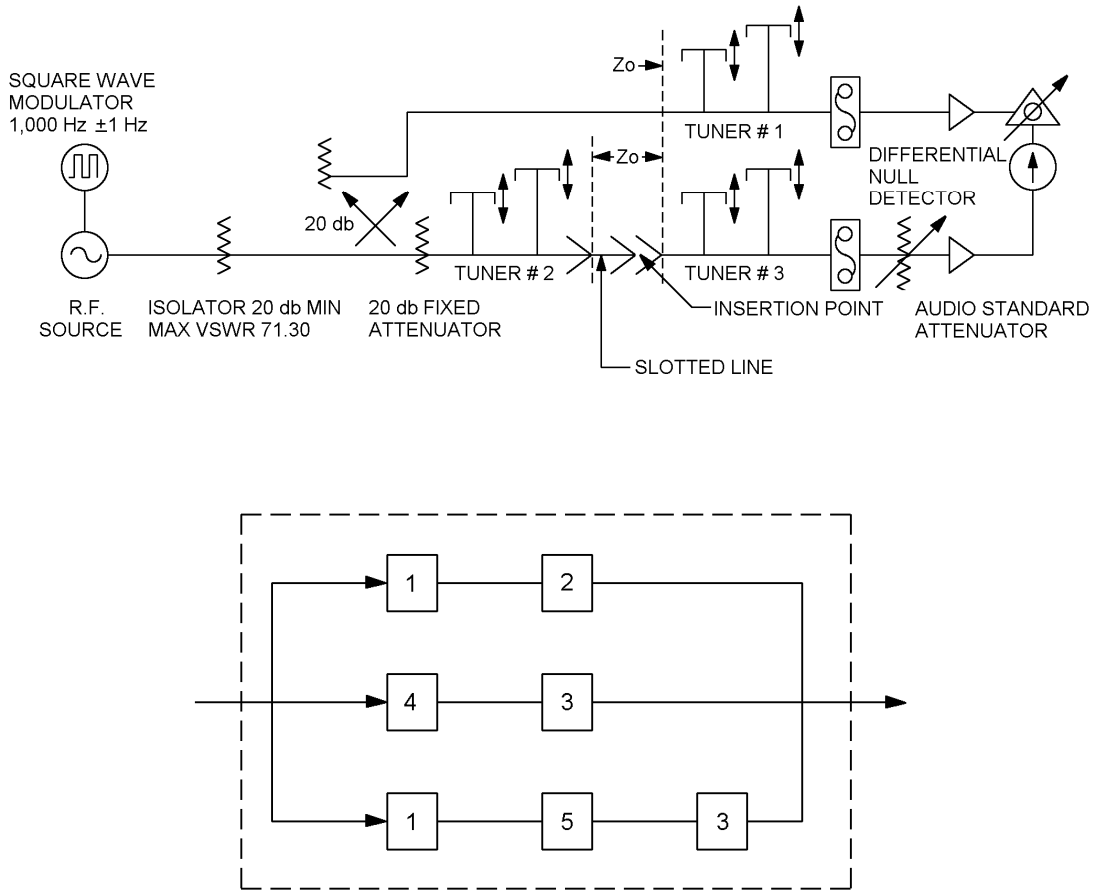

FIGURE 5. Method of insertion loss and rated connector pair.

ITEM:

1. Standard test connector with hermaphroditic input fitting compatible with output fitting of slotted line, and output interface compatible with input interface of adapter to be tested.
2. Standard test connector of opposite sex to item 1 and hermaphroditic output fitting compatible with input fitting of tuner #3.
3. Standard test connector with hermaphroditic output fitting compatible with input fitting of tuner #3 and input interface compatible without output interface of adapter to be tested.
4. Standard test connector of opposite sex to item 3 and hermaphroditic input fitting compatible with output fitting of the slotted line.
5. Adapter under test.

FIGURE 5. Method of insertion loss measurement of rated connector pair - Continued.

4.5.12 Durability (see 3.15). Each adapter under test shall be mated with a typical production connector in accordance with this specification. The adapter shall be subjected to the number of cycles of mating and unmating specified (see 3.1). The adapter and its mating part shall be completely engaged and completely disengaged during this cycle. Lubrication of the threads or rotational parts shall not be employed for this test unless specified (see 3.1). It is permissible to shake or blow debris from the threads or interface surfaces at intervals of not less than 50 cycles. Solvents or tools shall not be used for cleaning.

4.5.13 Dielectric withstanding voltage (see 3.16). Adapters tested in accordance with method 301 of MIL-STD-202. The following details shall apply:

a. Special preparations or conditions.

(1) The maximum relative humidity shall be 50 percent. When facilities are not available at this test condition, adapters are tested at room ambient relative humidity. In case of dispute, if the test has been made at room ambient relative humidity, retest shall be made at 50 percent maximum relative humidity.
(2) Precautions shall be taken to prevent air-gap voltage breakdowns.
(3) The voltage shall be metered on the high side of the transformer.

b. Magnitude of test voltage (see 3.1): The voltage shall be instantaneously applied.

c. Nature of potential: Alternating current.

d. Points of application of test voltage: Between the center contact and body.

4.5.14 Contact resistance (see 3.17). The contact resistance of the mated outer contacts and the contact resistance of the mated inner contacts shall be measured, as applicable, as specified herein. The coupling mechanism shall be removed when measuring contact resistance of the outer contacts. The test set-up shall be as shown on figure 6. The test shall be performed as follows:

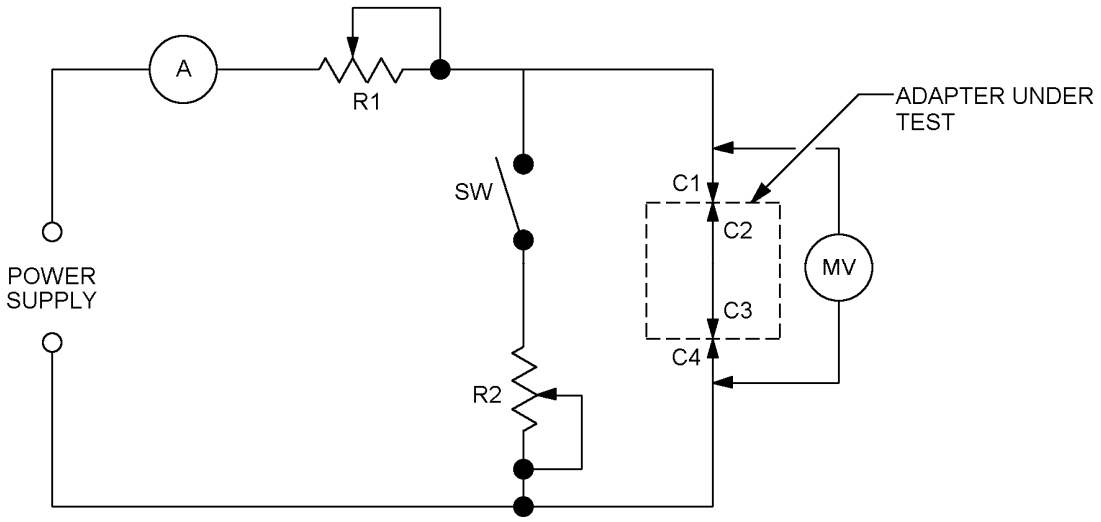

a. Remove contacts C2 – C3 from the measuring circuit.
b. Close switch (SW).
c. Adjust resistor (R2) for a voltmeter (VM) reading of 50 millivolts.
d. Connect contacts C2 – C3 to the measuring circuit.
e. Check to see that the voltage drops significantly prior to opening the switch in (f).
f. Open switch (SW).
g. Adjust resistor (R1) for a circuit current of 1 ampere.
h. Measure the voltage drop across contacts C1 – C4 and call this “e”.
i. Compute contact resistance as follows:
Contact resistance (milliohms) = e (in millivolts) ÷1 ampere.

A – Ammeter (0-1 ampere)
R1 – Variable resistor (0-15 ohms).
Sw – Switch (contact resistance <.01 ohm).
R2 – Variable resistor (0-0.1 ohm)
Vm – Voltmeter.
Power supply – DC 10 volts at 1 ampere.

FIGURE 6. Diagram for contact resistance.

4.5.15 Vibration, high frequency (see 3.18). The mated adapter shall be tested in accordance with method 204 of MIL-STD-202. The following details and exceptions shall apply: Contacts may be connected in series.

a. Mating connector – Cabled connector in accordance with MIL-PRF-39012.
b. Mounting of specimens – The adapter shall be mounted by its normal mounting device and engaged by its normal coupling mechanism; safety wire shall not be used. Adapters having no provisions for mounting may be held to the jig (see figure 7) by a suitable clamp.
c. Electrical load – At least 100 milliamperes shall be flowing through each set of contacts.
d. Test condition – B.
e. Measurements – During vibration, continuity of the center and outer contacts shall be monitored with a detector capable of detecting interruptions of 1 microsecond or greater duration.

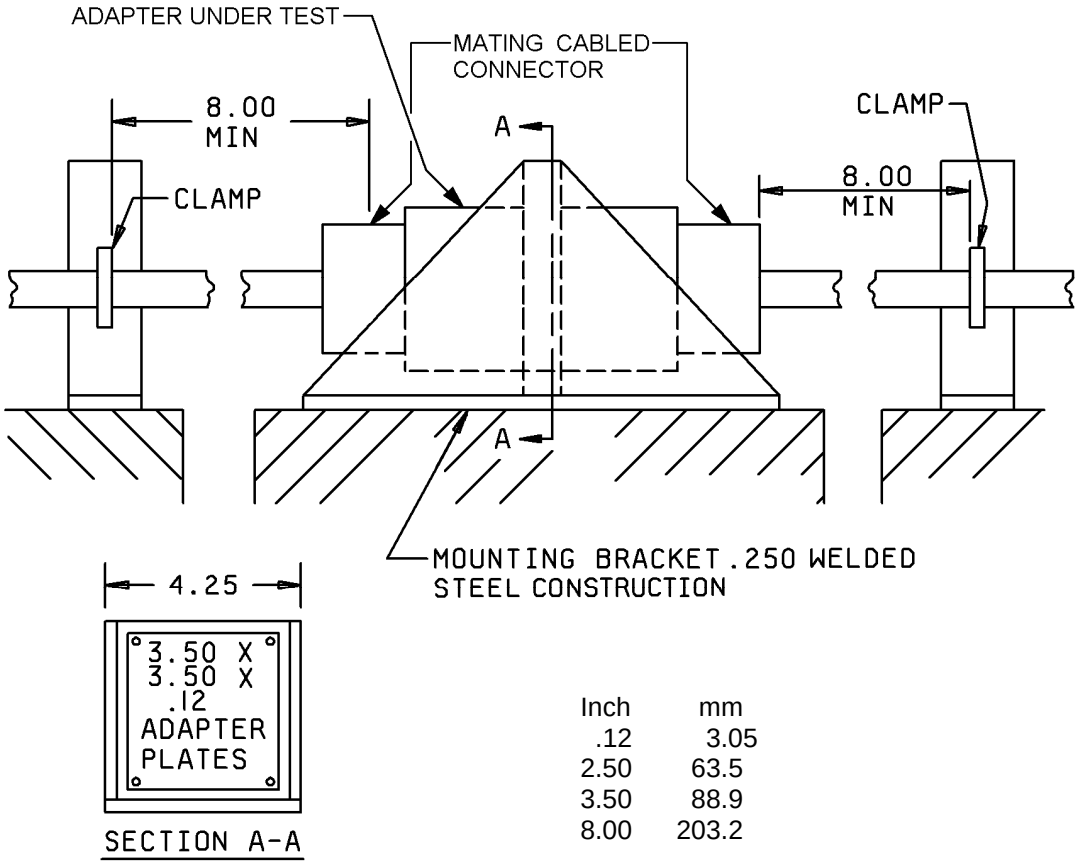

Inch	mm
.12	3.05
2.50	63.5
3.50	88.9
8.00	203.2

FIGURE 7. Vibration testing set-up.

4.5.16 Shock (specified pulse) (see 3.19). The adapter shall be tested in accordance with method 213 of MIL-STD-202. The following exceptions and details shall apply:

a. Mating connector – Cabled connector per MIL-PRF-39012.

b. Mounting – Panel or bulkhead adapters shall be mounted by normal means. All other adapters shall be rigidly clamped to the shock table.

c. Test condition letter – As specified (see 3.1). Three shocks in each of three mutually perpendicular planes shall be applied; one of which shall be parallel to the axis of the adapter.

d. Measurements during shock – Continuity shall be monitored with a detector capable of detecting interruptions of 1 microsecond or greater in duration.

4.5.17 Thermal shock (see 3.20). Adapters shall be tested in accordance with method 107 of MIL-STD-202. The following details shall apply:

a. Test condition letter (see 3.1).
b. Measurements before and after cycling – Not applicable.

4.5.18 Moisture resistance (see 3.21). The adapter shall be tested in accordance with method 106, MIL-STD-202. The following exceptions and conditions shall apply:

a. Mating connector – Cabled connector in accordance with MIL-PRF-39012.
b. Initial measurements – Not applicable.
c. Loading voltage – Not applicable.
d. Number of cycles – 10 continuous cycles except step 7b (vibration) shall be omitted.
e. Final measurements – After the final cycle and within 5 minutes after removal from high humidity, insulation resistance shall be measured as specified in 4.5.8 .

4.5.19 Corona level (see 3.22). The test sample shall be connected to a mating connector and arranged in a suitable test circuit such as indicated on figure 8. Components of the test circuit shall be corona free to the extent that a discharge of five picocoulombs or less can be measured when the 60 Hz test potential is increased to the value specified at the reduced pressure specified (see 3.1). The type of cable and length of cable used shall be as specified (see 3.1). No grease or similar compounds shall be used in or on the test item. After the sample is purged of air, the 60 Hz voltage shall be slowly increased until the detector, operated at a sensitivity of five picocoulombs, indicates a sustained corona discharge. The voltage shall then be decreased until corona is at the five picocoulombs level or less. The latter value is being the corona level of the connector under test. The contractor may, at his own option, use a corona detector (which has been approved by the Government) for performing the test in lieu of the test set up on figure 8.

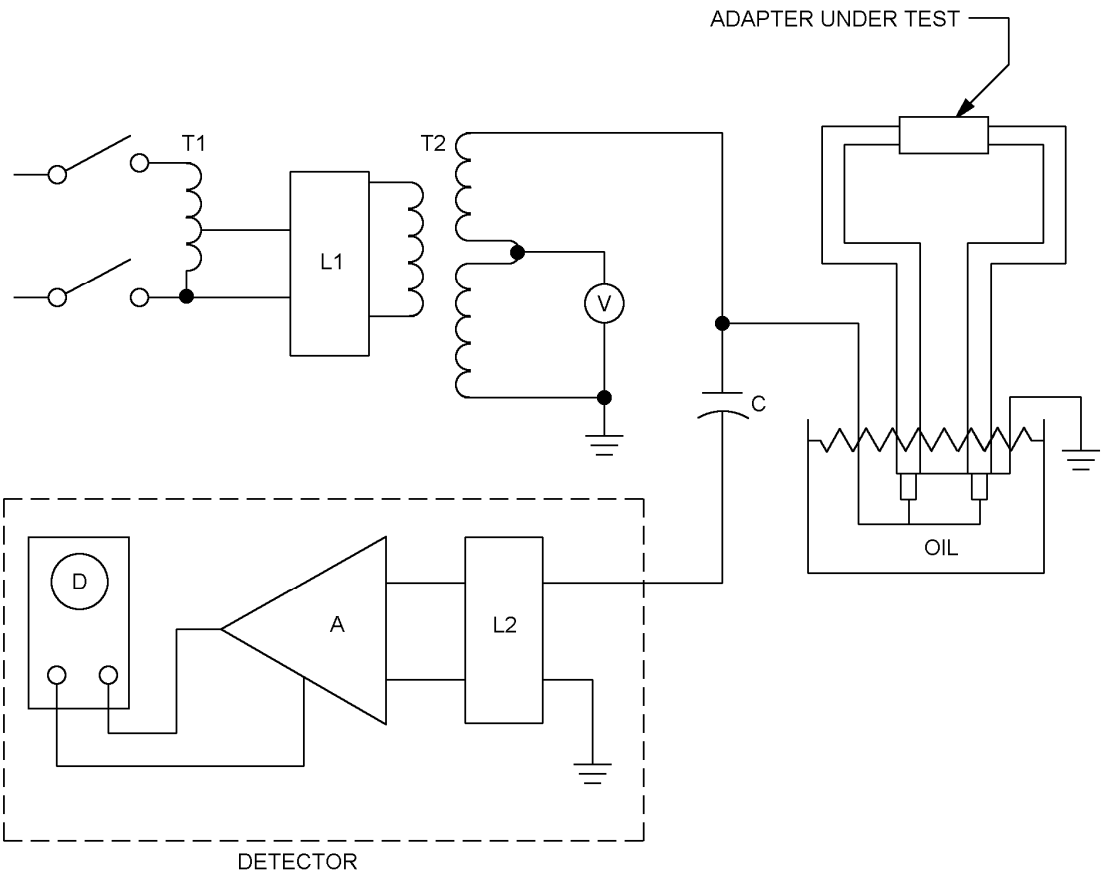

C – Corona free coupling capacitor (see note 1).
D – Discharge display.
L1 – Input line filter (see note 2).
L2 – 10-50 kHz detector input filter.
A – Detector amplifier.
T1 – 0-130 V variable transformer.
T2 – High voltage transformer (corona free – less than 5 picocoulombs).
V – Voltmeter.

NOTES:
1. Equal to or greater than total circuit capacitance.
2. 100 dB 14 kHz to 10 GHz.

FIGURE 8. Equipment and schematic for measuring corona level.

4.5.20 RF high potential withstanding voltage (see 3.23). The adapter shall be mated to a cabled connector in accordance with MIL-PRF-39012 (the cable shall be approximately 2 inches long). This assembly shall then be inserted into the high impedance circuit as shown on figure 9, or equivalent, and instantaneously subjected to the RF voltage and frequency specified (see 3.1) between the center contact and body of the adapters. The duration of the test shall be 1 minute. The RF voltage source shall be frequency stabilized and shall have an approximate pure sine wave output with minimum harmonic content. Means shall be provided to indicate disruptive discharge.

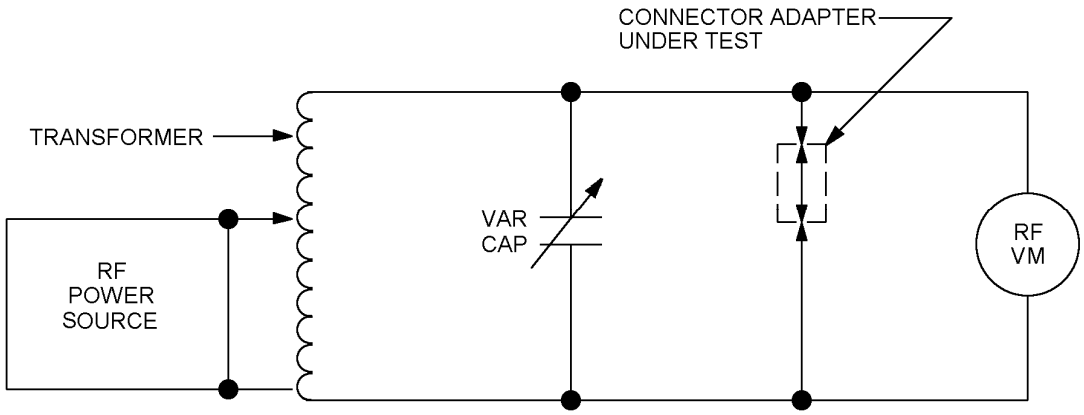

FIGURE 9. Circuit diagram for RF high potential withstanding voltage.

4.5.21 Corrosion (see 3.24). Adapters shall be tested in accordance with method 101 of MIL-STD-202. The following details and exceptions shall apply:

a. Test condition letter: B.
b. Salt solution: 5 percent.

After exposure, adapters shall be washed, shaken and lightly brushed as specified in method 101 of MIL-STD-202 and then permitted to dry for 24 hours at 40°C. Adapters shall then be examined for evidence of corrosion, pitting, and ease of coupling.

4.5.22 Coupling mechanism retention forces (see 3.25). The adapter body and coupling mechanism shall be respectively secured to the lower and upper jaws of a tensile tester in an appropriate manner. A tensile load shall be applied at a rate of approximately 100 pounds/minute up to the force as specified and held at that value for one minute (see 3.1). During the one minute of steadily applied force, the coupling mechanism shall be rotated with respect to the adapter body, two full revolutions in each direction.

4.5.23 Safety wire hole pullout (see 3.28). A single strand of safety wire shall be looped through the safety wire hole and secured to itself. Forces of 15 pounds (67 Newtons) minimum shall be applied to the safety wire pulling away from the adapter. One pull shall be parallel to the adapter axis and one pull perpendicular to the adapter axis (see figure 10). The safety wire shall be corrosion resistant steel .020 inch diameter (24 gauge) or .015 inch diameter, (27 gauge). This test is to be conducted under static conditions. All holes are to be tested individually.

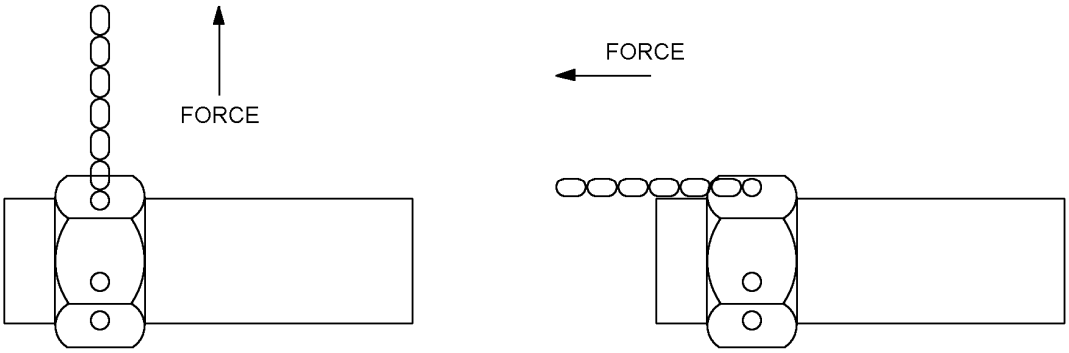

FIGURE 10. Safety wire hole pullout procedure.

5. PACKAGING

5.1 Packaging. For acquisition purposes, the packaging requirements shall be as specified in the contract or order (see 6.2). When actual packaging of materiel is to be performed by DoD or in-house personnel, these personnel need to contact the responsible packaging activity to ascertain packaging requirements. Packaging requirements are maintained by the Inventory Control Point's packaging activities within the Military Service or Defense Agency, or within the military serivice's system commands. Packaging data retrieval is available from the managing Military Department's or Defense Agency's automated packaging files, CD-ROM products, or by contacting the responsible packaging activity.

6. NOTES
(This section contains information of a general or explanatory nature that may be helpful, but is not mandatory.)

6.1 Intended use. Connectors and fittings covered by this specification are intended for use in radiofrequency application up to the frequency specified (see 3.1).

6.2 Acquisition requirements. Acquisition documents should specify the following:

a. Title, number and date of this specification.

b. Title, number and date of the applicable detail specification.

c. Packaging requirements (see 5.1).

d. The complete PIN of the adapter or fitting ordered.

6.3 Qualification. With respect to products requiring qualification, awards will be made only for products which are, at the time of award of contact, qualified for inclusion in the applicable Qualified Products List QPL No. 55339 whether or not such products have actually been so listed by that date. The attention of the contractors is called to this requirement, and manufacturers are urged to arrange to have the products that they propose to offer to the Federal Government tested for qualification in order that they may be eligible to be awarded contracts or orders for the products covered by this specification. Information pertaining to qualification of products may be obtained from Defense Supply Center Columbus (DSCC-VQ), P.O. Box 3990, Columbus, Ohio 43218-3990.

6.4 Changes from previous issue. The margins of this specification are marked with vertical lines to indicate where changes from the previous issue were made. This was done as a convenience only and the Government assumes no liability whatsoever for any inaccuracies in these notations. Bidders and contractors are cautioned to evaluate the requirements of this document based on the entire content irrespective of the marginal notations and relationship to the last previous issue.

6.5 Subject term (key word) listing:
Copper beryllium
Silver

6.6 Environmentally preferable material. Environmentally preferable materials should be used to the maximum extent possible to meet the requirements of this specification. As of the dating of this document, the U.S. Environmentally Protection Agency (EPA) is focusing efforts on reducing 31 priority chemicals. The list of chemicals is available on their website at http://www.epa.gov/epaoswer/hazwaste/minimize/chemlist.htm. Further information is available at the following EPA site: http://www.epa.gov/epaoswer/hazwaste/minimize/. Included in the EPA list of 31 priority chemicals are cadmium, lead, and mercury. Use of the materials on the list should be minimized or eliminated unless needed to meet the requirements specified herein (see section 3).

CONCLUDING MATERIAL

Custodians:
Army – CR
Navy – EC
Air Force – 11
NASA – NA
DLA - CC

Review activities:
Army – AR, AT, MI
Navy – AS, MC, OS, SH
Air Force – 19, 99

Preparing activity:
DLA – CC

(Project 5935-2007-129)

NOTE: The activities listed above were interested in this document as of the date of this document. Since organizations and responsibilities can change, you should verify the currency of the information above using the ASSIST Online database at http://assist.daps.dla.mil .