INCH-POUND
MIL-PRF-39035E
w/ Amendment 2
24 April 2014
SUPERSEDING
MIL-PRF-39035E
w/ Amendment 1
28 January 2011

PERFORMANCE SPECIFICATION

RESISTOR, VARIABLE, NONWIREWOUND (ADJUSTMENT TYPE), NONESTABLISHED RELIABILITY, AND ESTABLISHED RELIABILITY, GENERAL SPECIFICATION FOR

This specification is approved by all Departments and Agencies of the Department of Defense.

* Characteristics C and H are inactive for new design.

1. SCOPE

1.1 Scope. This specification covers the general requirements for nonestablished reliability (non-ER) and established reliability (ER), multiturn lead-screw actuated, and single-turn, nonwirewound, variable resistors with a contact bearing uniformly over the surface of the entire resistive element, when positioned by an actuator. These resistors are capable of full-load operation (when the maximum resistance is engaged), at a maximum temperature of 150°C, with a resistance tolerance of ±10 percent. The ER resistors will have life failure rate levels ranging from 1.0 to 0.001 percent per 1,000 hours (see 1.2.1.5). These failure rate levels are established at a 60 percent confidence level maintained at 10 percent producer's risk on the basis of the life tests.

1.2 Classification.

1.2.1 Part or Identifying Number (PIN). The PIN is in the following form, and as specified (see 3.1).

RJR24	F	P	102	M
Style (1.2.1.1)	Characteristic (1.2.1.2)	Terminals (1.2.1.3)	Resistance (1.2.1.4)	Product level designator (1.2.1.5)

1.2.1.1 Style. The style is identified by the three letter symbol "RJR" followed by a two-digit number; the letters identify, adjustment type, nonwirewound, variable resistors, and the number identifies the physical size.

1.2.1.1.1 Performance requirements. Performance requirements are identified in accordance with table I.

Comments, suggestions, or questions on this document should be addressed to: DLA Land and Maritime, ATTN: VAT, Post Office Box 3990, Columbus, Ohio 43218-3990 or by email Resistor@dla.mil. Since contact information can change, you may want to verify the currency of this address information using the ASSIST Online database at https://assist.dla.mil/.

1.2.1.2 Characteristic. The characteristic is identified by a single letter which identifies the resistance-temperature characteristic, maximum ambient temperature at rated wattage, and maximum ambient operating temperature (zero load) in accordance with table I.

1.2.1.3 Terminals. The terminals are identified by a single letter in accordance with table II.

* TABLE I. Performance requirements.

Requirement		Characteristic		
		C 1/	F	H 1/
Maximum resistance-temperature characteristic	Percent/^{O}C Parts/million/^{O}C	±.025 ±250	±.010 ±100	±.005 ±50
Maximum ambient temperature at rated load		85°C	85°C	85°C
Maximum ambient temperature at zero load derating		150°C	150°C	150°C
Contact resistance variation		See notes		
		Maximum percent change in total resistance		
Thermal shock		2	1	1
Moisture resistance		2	1	1
Shock (specified pulse)		1	1	1
Vibration, high frequency		1	1	1
Resistance to soldering heat		1	1	1
Life (2,000 hours)		3	3	3
Life (10,000 hours)		5	5	5
Low temperature operation		2	1	1
Low temperature storage		2	1	1
High temperature Storage		3	3	3
Rotational life		2	2	2
Conditioning		2	1.5	1

1/ Inactive for new design.

NOTES:
1. Where 1 percent or less is specified for total resistance change, it will be considered as ±(1 percent +0.05 ohm).
2. For characteristic C, the contact resistance variation must be 3 percent or 20 ohms, whichever is greater.
3. For characteristics F and H, the contact resistance variation must be 3 percent or 3 ohms, whichever is greater.

TABLE II. Terminals.

Symbol	Type of terminal
L	Flexible, insulated-wire leads.
P	Printed-circuit pins.
W 1/	Printed-circuit pins (edge mounted).
X 2/	Printed-circuit pins (edge mounted, alternate configuration).
Y 3/	Printed-circuit pins (staggered).

1/ Available only in essentially square styles. Pins extend from the edge 180° away from the operating shaft, and are parallel to the longitudinal axis of the operating shaft.
2/ Available only in essentially square styles. Pins extend from the edge 90° away from the operating shaft, and are perpendicular to the longitudinal axis of the operating shaft.
3/ Applicable to style RJR12 (Inactive for new design) only.

* 1.2.1.4 Resistance. The nominal total value expressed in ohms is identified by a three digit number; the first two digits represent significant figures and the last digit specifies the number of zeros to follow. The following are examples of symbols for resistance values.

100	=	10 ohms	103	=	10,000 ohms
101	=	100 ohms	104	=	100,000 ohms
102	=	1,000 ohms	105	=	1,000,000 ohms

1.2.1.5 Product level designator. The product level designation as shown in table III is signified by a single letter (M, P, R, S, or C), which identifies the product level for which the resistor is qualified.

TABLE III. Product level designator.

Product level designator	Product level 1/
C	Non-ER
M	1.0
P	0.1
R	0.01
S	0.001

1/ FR in percent/1,000 hours.

2. APPLICABLE DOCUMENTS

2.1 General. The documents listed in this section are specified in sections 3 and 4 of this specification. This section does not include documents cited in other sections of this specification or recommended for additional information or as examples. While every effort has been made to ensure the completeness of this list, document users are cautioned that they must meet all specified requirements documents cited in sections 3 and 4 of this specification, whether or not they are listed.

2.2 Government documents.

2.2.1 Specifications, standards, and handbooks. The following specifications, standards, and handbooks form a part of this document to the extent specified herein. Unless otherwise specified, the issues of these documents are those cited in the solicitation or contract (see 6.2).

DEPARTMENT OF DEFENSE SPECIFICATION

MIL-PRF-39035/1	-	Resistors, Variable, Nonwirewound (Adjustment Type, Lead Screw Actuated), Nonestablished Reliability, and Established Reliability, Style RJR12. INACTIVE FOR NEW DESIGN
MIL-PRF-39035/2	-	Resistors, Variable, Nonwirewound (Adjustment Type, Lead Screw Actuated), Nonestablished Reliability, and Established Reliability, Style RJR24.
MIL-PRF-39035/3	-	Resistors, Variable, Nonwirewound (Adjustment Type, Lead Screw Actuated), Nonestablished Reliability, and Established Reliability, Style RJR26.
MIL-PRF-39035/4	-	Resistors, Variable, Nonwirewound (Adjustment Type, Single Turn), Nonestablished Reliability, and Established Reliability, Style RJR50.

DEPARTMENT OF DEFENSE STANDARDS

MIL-STD-202	-	Tests Methods for Electronic and Electrical Components Parts.
MIL-STD-690	-	Failure Rate Sampling Plans and Procedures.
MIL-STD-790	-	Established Reliability and High Reliability Qualified Products List (QPL) Systems for Electrical, Electronic, and Fiber Optic Parts Specifications.
MIL-STD-1285	-	Marking of Electrical and Electronic Parts.

* (Copies of these documents are available online at http://quicksearch.dla.mil).

2.3 Non-Government publications. The following documents form a part of this document to the extent specified herein. Unless otherwise specified, the issues of the documents are those cited in the solicitation or contract (see 6.2).

* TECHAMERICA

EIA-554-1	-	Assessment of Outgoing Nonconforming Levels in Parts Per Million (PPM).
EIA-557	-	Statistical Process Control Systems (SPC).

* (Copies of these documents are available online at www.techamerica.org).

2.4 Order of precedence. Unless otherwise noted herein or in the contract, in the event of a conflict between the text of this document and the references cited herein (except for related specification sheets), the text of this document takes precedence. Nothing in this document, however, supersedes applicable laws and regulations unless a specific exemption has been obtained.

3. REQUIREMENTS

3.1 Specification sheets. The individual item requirements shall be as specified herein and in accordance with the applicable specification sheet. In the event of any conflict between the requirements of this specification and the specification sheet, the latter shall govern (see 6.2).

3.2 Qualification. Resistors furnished under this specification shall be products that are authorized by the qualifying activity for listing on the applicable Qualified Products List (QPL) before contract award (see 4.4 and 6.3). In addition, the manufacturer shall obtain certification from the qualifying activity that the QPL system requirements of 3.3 and 6.3 have been met and are being maintained. Authorized distributors that are approved to MIL-STD-790 distributors requirements by the QPL manufacturer are listed in the QPL.

3.3 QPL system. The manufacturer shall establish and maintain a QPL system for parts covered by this specification. Requirements for this system are specified in MIL-STD-790 (all product levels) and MIL-STD-690 (ER parts only). In addition, the manufacturer shall also establish A Statistical Process Control (SPC) and Part Per Million (ppm) system that meets the requirements as described in 3.3.1 and 3.3.2 respectively.

3.3.1 SPC system. As part of the overall MIL-STD-790 QPL system, the manufacturer shall establish a SPC system that meets the requirements of EIA-557. Typical manufacturing processes for application of SPC include, printing of resistance elements, molding operation, lead attachment, and assembly. The reliability of resistors finished under this specification shall be established and maintained in accordance with the requirements and procedures specified in MIL-STD-790 and MIL-STD-690 with details and exceptions specified in 4.2, 4.4.4, and 4.7.

3.3.2 PPM system. As part of the overall MIL-STD-790 QPL system, the manufacturer shall establish a ppm system for assessing the average outgoing quality of lots in accordance with EIA-554-1 and 4.6.4. Data exclusion, in accordance with EIA-554-1, may be used with approval of the qualifying activity. The ppm system shall identify the ppm rate at the end of each month and shall be based on a six month moving average. PPM and total resistance shall be assessed for each style. Style reporting may include both non-ER and ER style combinations.

3.4 Material. The material shall be as specified herein. However, when a definite material is not specified, a material shall be used which will enable the resistors to meet the performance requirements of this specification. Acceptance or approval of any constituent material shall not be construed as a guaranty of the acceptance of the finished product.

3.4.1 Ferrous materials. Unless specifically approved by the Government, the use of ferrous material, with the exception of corrosion-resistant steel and resistance-element material, is prohibited.

3.4.2 Pure tin. The use of pure tin, as an underplate or final finish, is prohibited both internally and externally. Tin content of resistor components and solder shall not exceed 97 percent, by mass. Tin shall be alloyed with a minimum of 3 percent lead, by mass (see 6.12.1).

3.5 Interface and physical dimension requirements. The resistors shall meet the interface and physical dimensions specified (see 3.1).

3.5.1 Resistance element. The resistance element shall be nonwirewound on a form which shall not char or break down as a result of the tests specified herein. The element shall be characterized by a continuous nature of the surface area, or multiple paths of the resistance element to be contacted. Contact must be made over a continuous and unbroken resistance path.

3.5.2 Protective housing or enclosure. The resistance element of completed resistors shall be protected by a housing, or an enclosure, or both, which shall completely cover the exterior of the resistance element. The protective enclosure shall be free from holes, fissures, chips, or other faults, and shall be such as to minimize the establishment of leakage paths between the terminals, resulting from collection of moisture film on the exterior surface of the housing or enclosure. If the housing is made from a metal or metal alloy, it shall be properly protected against corrosion and all fasteners shall be plated. Unplated copper-alloy metals shall not be used in contact with aluminum.

3.5.3 Terminals. Terminals shall be as specified in table II. Connections of terminals to the resistance element shall be mechanically strong. All terminals shall be fastened securely. Terminals shall be protected by a corrosion resistant metallic coating, and all terminals or exposed portions of insulated wire shall be treated to facilitate soldering.

3.5.3.1 Terminal identification and circuit diagram.

3.5.3.1.1 Terminal identification.

3.5.3.1.1.1 Terminals (applicable to all terminals except L). Terminal identification shall be by one of two methods: The numerals designating terminal identification may be marked adjacent to the terminals, or circuit diagram (see 3.5.3.1.2) may be used, provided that such identification clearly indicates the applicable terminals.

3.5.3.1.1.2 Terminal L type resistors. For terminal type L resistors, the insulation of the flexible leads shall be color-coded as shown on figure 1.

3.5.3.1.2 Circuit diagram. The circuit diagram shall be marked on any surface of the resistor in a legible manner, as shown on figure 1.

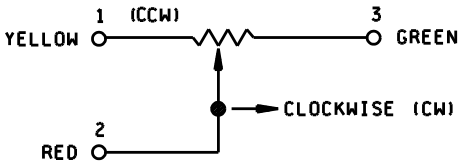

FIGURE 1. Circuit diagram

3.5.3.1.3 Legibility. Marking shall remain legible after all tests.

3.5.4 Securing of screw-thread assemblies. Screw-thread assemblies shall not loosen as a result of the tests specified herein.

3.5.5 Operating shaft. The operating shaft shall be of corrosion-resistant material with the head insulated from all electrical parts of the resistor.

3.5.6 Contact-arm assembly. Contact pressure on the resistance element shall be maintained by positive pressure and shall permit smooth electrical and mechanical control of the resistor over the entire range. The moving contact shall have continuous electrical contact with its terminal throughout the entire mechanical travel and shall be insulated from the operating shaft head and case.

3.5.7 Mechanical limits.

3.5.7.1 Clutches (applicable only to multiturn adjustment type units, unless otherwise specified). Clutches shall be furnished to permit the contact arm to idle at either end of the resistance element without electrical or mechanical malfunction (see 3.1 and 3.16.2).

3.5.7.2 Stops (applicable to single turn units, unless otherwise specified). Stops employed to limit the mechanical rotation of the contact arm assembly may be part of, but shall not complete an electrical circuit (see 3.1 and 3.16.3).

3.5.8 Riveting. When riveting is required, the operation shall be carefully performed to insure that the rivets are tight and satisfactorily headed. Riveting shall not be used in assembling two or more current-carrying parts to an insulating material.

3.5.9 Flux and cleaning agents. Flux for soldering of electrical connections shall be resin or resin and alcohol. No acid or acid salts shall be used in preparation for or during soldering; however, exception is permitted for preliminary tinning of electrical connections and for tinning or soldering of mechanical joints not used to complete electrical circuits. Acid or acid salts shall not be used where they can come in contact with insulation material. Where acid or acid salts are used, as permitted herein, they shall be completely neutralized and removed immediately after use.

3.5.10 Process. Soldering connections shall be neat. There shall be no sharp points or rough surfaces resulting from insufficient heating. The solder shall feather out to a thin edge, indicating proper flowing and wetting action, and shall not be crystallized, overheated, or underheated. The minimum necessary amount of flux and solder shall be used for electrical connections. Excess resin shall be removed without damage to the solder connection. Insulation material that has been subjected to heating during the solder operation shall be undamaged and parts fastened thereto shall not have become loosened.

3.5.11 Solder dip (retinning) leads (not applicable to terminal L). The manufacturer (or his authorized category B or C distributor) may solder dip/retin the leads of product supplied to this specification provided the solder dip process (see appendix A) has been approved by the qualifying activity.

3.5.11.1 Welding and brazing. Where welding and brazing is employed, the electrical connections shall be mechanically secure and electrically continuous after welding and brazing. Where brazing is employed only, substantially noncorrosive fluxes shall be used, unless it can be shown that corrosive elements have been satisfactorily removed after brazing.

* 3.5.12 Mechanical damage. When resistors are inspected for mechanical damage, the resistor shall be inspected for but not limited to shaft head chipping, operating shaft not turning, screws that are loose or falling out, and cracking of the epoxy where the leads exit the unit.

3.6 Power rating. The resistors shall have a power rating based on continuous full-load operation at the ambient temperature specified (see 3.1 and figure 2). The power rating is dependent on the ability of the resistors to meet the life requirements specified in 3.30. For temperatures in excess of those specified, the load shall be derated as shown on figure 2. Power ratings as specified (see 3.1) are applicable only when the maximum resistance is engaged in the circuit. The power rating is reduced in approximately the same proportion as the resistance.

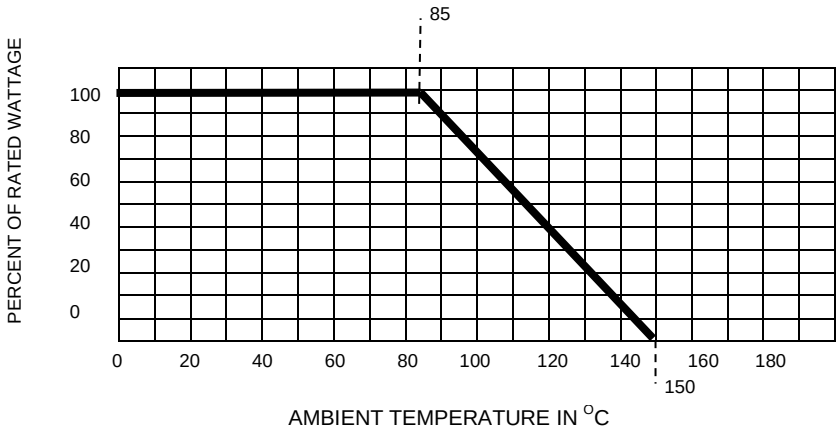

FIGURE 2. Derating curve for high-ambient temperatures.

3.7 Voltage rating. The theoretically calculated rated continuous working voltage or the voltage equivalent to power rating (rated wattage) shall be determined from the following formula:

$$E = \sqrt{PR}$$

Where:

E = Rated dc or rms ac continuous working voltage at commercial-line frequency and waveform.
P = Power rating (see 3.1).
R = Nominal resistance (see 3.1).

In no case shall the rated dc or rms continuous working voltage be greater than the applicable maximum value (see 3.1).

3.8 Conditioning. When resistors are tested as specified in 4.8.2, there shall be no mechanical damage (see 3.5.12). The change in total resistance shall not exceed ±2 percent for characteristic C, ±1.5 percent for characteristic F, and ±1 percent for characteristic H.

3.9 Contact resistance variation. When measured as specified in 4.8.3, the contact resistance variation shall not exceed ±3 percent or 20 ohms for characteristic C, and ±3 percent or 3 ohms for characteristics F and H, which ever is greater.

3.10 Integrity of shaft (not applicable to style RJR32). When resistors are tested as specified in 4.8.4, there shall be no evidence of shaft breakage, and the shaft shall remain in one piece.

3.11 DC resistance.

3.11.1 Total resistance. When measured as specified in 4.8.5.1, the total direct current (dc) resistance shall not deviate from the specified nominal resistance (see 3.1), by more than ±10 percent.

3.11.2 End resistance. When measured as specified in 4.8.5.2, the end resistance for all characteristics shall not exceed 2 ohms or ±2 percent of the total resistance, which ever is greater.

3.11.3 Resistance value deviations. All maximum deviations as specified in this section are to be considered absolute limits with the exception of the contact resistance adjustments.

3.12 Immersion (not applicable to L terminals). When resistors are tested as specified in 4.8.6, no continuous stream of bubbles shall emanate from any concentrated point of the resistor. When resistors are subjected to the dye penetrant test, there shall be no evidence of dye in the internal cavities.

3.13 Actual effective electrical travel. When resistors are tested as specified in 4.8.7, the number of turns of the operating shaft necessary for the contact arm to traverse the resistance element shall be as specified (see 3.1).

3.14 Dielectric withstanding voltage. When resistors are tested as specified in 4.8.8, there shall be no evidence of damage, arcing, or breakdown. The leakage current shall not exceed one milliampere.

3.15 Insulation resistance. When resistors are tested as specified in 4.8.9, the dry insulation resistance shall not be less than 1,000 megohms.

3.16 Torque.

3.16.1 Operating. When resistors are tested as specified in 4.8.10.1, the minimum torque required to move the contact arm shall be 0.05 ounce-inch and the maximum torque required shall be as specified (see 3.1).

3.16.2 Clutch (applicable only to multiturn adjustment type units, unless otherwise specified). When resistors are tested as specified in 4.8.10.2, the contact arm shall idle against the stop without electrical discontinuity or evidence of mechanical damage (see 3.5.12). The travel of the contact arm shall also be capable of reversing direction.

3.16.3 Stops (applicable only to single turn units, unless otherwise specified). When resistors are tested as specified in 4.8.10.3, they shall withstand the stop torque specified (see 3.1), without damage to the contact arm or stop.

3.17 Thermal shock. When resistors are tested as specified in 4.8.11, the change in total resistance shall not exceed ±2 percent for characteristic C, and ±1 percent for characteristics F and H. The change in setting stability shall not exceed ±1 percent. There shall be no electrical discontinuity or evidence of mechanical damage (see 3.5.12).

3.18 Solderability (not applicable to terminal L). When resistors are tested as specified in 4.8.13, they shall meet the criteria for wire-lead terminal evaluation in the test method.

3.19 Resistance-temperature characteristic. When resistors are tested as specified in 4.8.14, the resistance-temperature characteristics shall be referred to an ambient temperature of 25°C. Resistors shall not exceed the applicable values specified in table I.

3.20 Moisture resistance. When resistors are tested as specified in 4.8.15, resistors shall meet the following requirements:

Total resistance:	Change shall not exceed ±2 percent for characteristic C, and ±1 percent for characteristics F and H.
Insulation resistance:	Shall not be less than 100 megohms.
Visual examination:	There shall be no evidence of mechanical damage(see 3.5.12).

3.21 Setability. When resistors are tested as specified in 4.8.16, the setability shall be ±1 percent maximum.

3.22 Shock (specified pulse). When resistors are tested as specified in 4.8.17, the change in total resistance shall not exceed ±1 percent. The change in setting stability shall not exceed ±1 percent. There shall be no electrical discontinuity or evidence of mechanical damage (see 3.5.12).

3.23 Vibration, high frequency. When resistors are tested as specified in 4.8.18, there shall be no electrical discontinuity, and resistors shall meet the following requirements:

Setting stability:	Change shall not exceed ±1 percent.
Total resistance:	Change shall not exceed ±1 percent.
Visual examination:	There shall be no evidence of mechanical damage (see 3.5.12).

3.24 Salt spray (corrosion). When resistors are tested as specified in 4.8.19, there shall be no appreciable corrosion which will affect the life or serviceability. If the base metal is corroded, it shall be considered a defect.

3.25 Resistance to soldering heat. When resistors are tested as specified in 4.8.20, the change in total resistance shall not exceed ±1 percent. There shall be no evidence of mechanical damage (see 3.5.12).

3.26 Low temperature operation. When resistors are tested as specified 4.8.21, resistors shall meet the following requirements:

Setting stability:	Change shall not exceed ±2 percent.
Total resistance:	Change shall not exceed ±2 percent for characteristic C, and ±1 percent for characteristics F and H.
Visual examination:	There shall be no evidence of mechanical damage (see 3.5.12).

3.27 High temperature exposure. When tested as specified in 4.8.22, resistors shall meet the following requirements:

Setting stability:	Change shall not exceed ±2 percent.
Total resistance:	Change shall not exceed ±3 percent.
Dielectric withstanding voltage:	As specified in 3.14. (atmospheric pressure).
Insulation resistance:	Shall not be less than 1,000 megohms.
Visual examination:	There shall be no evidence of mechanical damage (see 3.5.12).

3.28 Rotational life. When the resistors are tested as specified in 4.8.23, the change in total resistance shall not exceed ±2 percent, and there shall be no mechanical damage (see 3.5.12). The failure of one pair of units being tested shall not count as a failure for the companion unit.

3.29 Terminal strength. When the resistors are tested as specified in 4.8.24, there shall be no evidence of mechanical damage (see 3.5.12), and resistors shall be electrically continuous.

3.30 Life.

3.30.1 Qualification. When the resistors are tested as specified in 4.8.25, there shall be no evidence of mechanical damage (see 3.5.12). The change in resistance between the initial measurement and any of the succeeding measurements shall not exceed ±3 percent.

3.30.2 Failure-rate level determination. When the resistors are tested as specified in 4.8.25, there shall be no evidence of mechanical damage (see 3.5.12) to the resistance element, or enclosure. The change in resistance between the initial measurement and any of the succeeding measurements shall not exceed ±5 percent. This single failure criterion shall be applicable to all measurements during the life test for purposes of determining failure rate level qualification and is applicable as a parallel requirement with 3.30.1 to the measurements made during the life test specified for the qualification inspection.

3.31 Resistance to solvents. When the resistors are tested as specified in 4.8.26, there shall be no evidence of mechanical damage (see 3.5.12) and the markings shall remain legible.

3.32 Low temperature storage (qualification only). When the resistors are tested as specified in 4.8.27, the change in total resistance shall not exceed ±2 percent for characteristic C, and ±1 percent for characteristics F and H.

3.33 Marking.

3.33.1 Full marking. The resistors shall be marked with the PIN (see 3.1), and "JAN" brand. In addition, the resistor shall be dated and source coded in accordance with MIL-STD-1285. Where the date coding does not provide specific lot identification, the manufacturer shall mark the resistor with the lot code symbol. Where required, the PIN may appear on two lines as shown in the following example:

RJR24F
P102M

Marking shall remain legible at the end of all tests.

3.33.2 Minimum marking. When the physical size of the resistor style precludes the marking of the information required by 3.33.1, the minimum marking shall be as specified in the specification sheet (see 3.1). Marking shall remain legible at the end of all tests. In those cases where full marking requirements are not on the resistor body, the full marking shall be marked on the unit package.

* 3.33.3 JAN and J marking. The United States Government has adopted, and is exercising legitimate control over the certification marks "JAN" and "J", respectively, to indicate that items so marked or identified are manufactured to, and meet all the requirements of specifications. Accordingly, items acquired to, and meeting all of the criteria specified herein and in applicable specifications shall bear the certification mark "JAN" except that items too small to bear the certification mark "JAN" shall bear the letter "J". The "JAN" or "J" shall be placed immediately before the part number except that if such location would place a hardship on the manufacturer in connection with such marking, the "JAN" or "J" may be located on the first line above or below the part number. Items furnished under contracts or orders which either permit or require deviation from the conditions or requirements specified herein or in applicable specifications shall not bear "JAN" or "J". In the event an item fails to meet the requirements of this specification and the applicable specification sheets or associated specifications, the manufacturer shall remove the military part number and the "JAN" or the "J" from the sample tested and also from all items represented by the sample. The "JAN" or "J" certification mark shall not be used on products acquired to contractor drawings or specifications. The United States Government has obtained Certificate or Registration Number 504,860 for the certification mark "JAN", and Registration Number 2,577,735 for the certification mark “J”.

3.33.4 Supplying to higher FR levels. A manufacturer may supply to all higher failure rate levels than that to which he is qualified. Parts qualified and marked to lower failure rate levels, with procuring agency approval, are substitutable for higher rate level parts, and shall not be remarked unless specified in the contract or purchase order (see 6.2 and table IV).

TABLE IV. Failure rate substitution.

FR		FR substitution
S	(0.001)	
R	(0.01)	S
P	(0.1)	S, R
M	(1.0)	S, R, P
C	(non-ER)	S, R, P, M

3.33.5 Supplying to higher resistance temperature characteristics. Parts qualified and marked to lower resistance temperature characteristics, with procuring agency approval, are substitutable for higher resistance temperature characteristics and shall not be remarked unless specified in the contract or purchase order (see 6.2 and table V).

TABLE V. Characteristic substitution.

*

Characteristic		Characteristic substitution
Symbol	percent/^{O}C	
H 1/	±50	-
F	±100	H
C 1/	±250	H, F

1/ Inactive for new design.

* 3.34 Recycled, recovered, environmentally preferable, or biobased materials. Recycled, recovered, environmentally preferable, or biobased materials should be used to the maximum extent possible provided that the material meets or exceeds the operational and maintenance requirements, and promotes economically advantageous life cycle costs.

3.35 Workmanship. Resistors shall be processed in such a manner as to be uniform in quality, and shall be free from holes, fissures, chip, corrosion, and malformation. The terminals shall be unbroken and not crushed or nicked; and the resistors shall be free from other defects that will affect life, serviceability, or appearance.

4. VERIFICATION

4.1 Classification of inspections. Inspection requirements specified herein are classified as follows:

a. Qualification inspection (see 4.4).

b. Verification of qualification (see 4.5).

c. Conformance inspection (see 4.6).

d. Periodic group B inspection (see 4.7).

4.2 Reliability and quality.

4.2.1 QPL system. The manufacturer shall establish and maintain a QPL system in accordance with 3.3. Evidence of such compliance is a perquisite for qualification and verification of qualification.

4.2.1 SPC system. The SPC program shall be established and maintained in accordance with EIA-557. Evidence of such compliance shall be a perquisite for qualification and verification of qualification.

4.3 Inspections, conditions and precautions.

4.3.1 Inspection. Unless otherwise specified herein, all inspections shall be performed in accordance with the test conditions specified in the "GENERAL REQUIREMENTS" of MIL-STD-202.

4.3.2 Precautions. Adequate precautions shall be taken during inspection to prevent condensation of moisture on resistors. Precautions shall also be taken to prevent damage by heat when soldering resistor leads to terminals.

4.4 Qualification inspection. Qualification inspection shall be performed at a laboratory acceptable to the Government (see 6.3), on sample units produced with equipment and procedures normally used in production.

4.4.1 Sample. The number of sample units comprising a sample of resistors to be submitted for qualification inspection shall be as specified in appendix A of this specification. The sample shall be taken at random from a production run and shall be produced with equipment and procedures normally used in production. Each resistor style shall be qualified separately.

4.4.2 Test routine (see appendix A). Sample units shall be subjected to the qualification inspection specified in table VII in the order shown. Sample test routine shall be as indicated in appendix A. The qualification of other than "P" type terminals shall be only applicable at the time of the original submission (see appendix A). The manufacturer shall not submit all of one terminal type at original submission and request qualification extension to a different terminal by partial submission at a later date. The qualification life sample shall be continued on test for 10,000 hours. The requirement of A.3.2 in appendix A shall apply for FR data accumulation.

4.4.3 Defectives. Defective specimens in excess of the quantities allowed in table VI shall be cause for refusal to grant qualification.

4.4.4 FR qualification. FR qualification shall be in accordance with the general and detail requirements of MIL-STD-690 and the following details:

a. Procedure I - Qualification at the initial FR level. Level M (1.0 percent) of FRSP-60 shall apply. Sample units shall be subjected to the qualification inspection specified in group VII of table VI (see 4.4.2). Entire life test sample shall continue on test to 10,000 hours as specified in 4.8.25, upon completion of the 2,000 hour qualification.

b. Procedure II - Extension of qualification to lower FR levels. To extend qualification to the R level (0.01 percent) and S (0.001 percent) FR levels, unit hours from two or more styles of similar construction may be combined.

c. Procedure III - Maintenance of FR level qualification. Maintenance period B of FRSP-10 shall apply. Regardless of the number of production lots produced during this period, the specified number of unit hours shall be accumulated to maintain qualification (see 4.7.2.1). For FR levels M, P, R, and S unit hours from all lead types may be combined.

4.4.5 PPM level verification. The contractor is responsible for establishing a quality system to assess the ppm level of lots that are subjected to group A inspections. The ppm defect level shall be based on a 6-month average.

4.5 Verification of qualification. Every 6 months, the manufacturer shall provide verification of qualification to the qualifying activity. Continued qualification is based on meeting the following requirements.

a. MIL-STD-790 program.

b. Design of resistor has not been modified.

c. Lot rejection for group A (subgroup 1 and subgroup 3) does not exceed 10 percent or one lot, whichever is greater.

d. Periodic group B inspection.

e. FR levels.

f. PPM assessment (NOTE: Grouping of style is permitted).

g. Continued qualification to non-ER (C) shall be based on continued maintenance of qualification for the ER part (minimum “M” FR level maintained).

TABLE VI. Qualification inspection. 1/

Inspection	Requirement paragraph	Test method paragraph	Number of sample to be inspected 2/		Number of defectives allowed 3/
Group I 4/			All sample units		N/A
Conditioning	3.8	4.8.2			
Contact resistance variation	3.9	4.8.3			
Immersion	3.12	4.8.6			
Group IA 4/			All sample units except for Group II		N/A
Visual and mechanical examination 5/	3.1, 3.3, to 3.3.2 incl., 3.4 to 3.5.11 incl., and 3.33 to 3.34 incl.	4.8.1			
Actual effective electrical travel	3.13	4.8.7			
End resistance	3.11.2	4.8.5.2			
Dielectric withstanding voltage	3.14	4.8.8			
Insulation resistance	3.15	4.8.9			
Torque	3.16	4.8.10			
Thermal shock	3.17	4.8.11			
Group II					
Solderability	3.18	4.8.13	6	any value	0
Group III			12	6 highest 6 lowest	1
Resistance temperature characteristic	3.19	4.8.14			
Moisture resistance	3.20	4.8.15			
Contact resistance variation	3.9	4.8.3			
Group IV			12		
Setability	3.21	4.8.16			
Shock (specified pulse)	3.22	4.8.17			
Vibration, high frequency	3.23	4.8.18			
Contact resistance variation	3.9	4.8.3			
Salt spray (corrosion)	3.24	4.8.19			
Group V			12		
Resistance to soldering heat	3.25	4.8.20			
Low temperature operation	3.26	4.8.21			
Low temperature storage	3.32	4.8.27			
High temperature exposure	3.27	4.8.22			
Contact resistance variation	3.9	4.8.3			
Integrity of shaft	3.10	4.8.4			
Group VI			12		
Rotational life	3.28	4.8.23			
Contact resistance variation	3.9	4.8.3			
Terminal strength	3.29	4.8.24			
Group VII			102	51 highest 51 lowest	1
Life	3.30	4.8.25			
Group VIII					
Resistance to solvents	3.31	4.8.26	3	any value	0

1/ Group I tests need not be performed if manufacturer presents certified data proving that tests have been previously performed on the qualification sample units.
2/ See appendix for details.
3/ Failure of one resistor in one or more tests of a group shall be charged as single defective.
4/ Nondestructive tests.
5/ Marking shall be considered defective only if illegible or missing.

4.6 Conformance inspection.

4.6.1 Inspection of product for delivery.

4.6.1.1 Non-ER resistors. Inspection of product for delivery shall consist of the requirements in 4.6.3.1.

4.6.1.2 ER resistors. Inspection of product for delivery shall consist of group A inspection.

4.6.2 Inspection and production lot.

4.6.2.1 Inspection lot. An inspection lot as far as practicable shall consist of all resistors of the same style, characteristic, and protective enclosure or coating and manufacturer under essentially the same process and conditions during a manufacturing period of 1 month maximum. For purposes of lot formation all terminal types may be included in the same lot; however, all lead types which are combined shall have the same method of terminal attachment. All leads in the lot shall be represented in a similar proportion by samples selected for inspection. Non-ER and ER lots shall be kept separate.

4.6.2.2 Production lot. A production lot shall consist of resistors of the same characteristic, style, nominal resistance value, resistance tolerance, and terminal style. Manufacture of all parts in the lot shall have been started, processed, assembled, and tested as a group. Lot identity shall be maintained through the manufacturing cycle. Non-ER and ER lots shall be kept separate.

4.6.3 Group A inspection.

4.6.3.1 Non-ER resistors. The manufacturer shall establish and maintain an inspection system to verify resistors meet visual/mechanical, contact resistance variation, total resistance, immersion, and solderability requirements. In-line or process control may be part of such a system. The inspection system shall also include criteria for lot rejection and corrective actions. The inspection system shall be verified under the overall MIL-STD-790 QPL system. NOTE: Since the non-ER (C level) is the ER design without the mandatory conformance inspection and FR level assessment, this product is still expected to meet the environmental qualification type requirements (e.g., moisture resistance, shock, vibration, etc.)

4.6.3.2 ER resistors. Group A inspection shall consist of the inspections specified in table VII, in the order shown.

4.6.3.2.1 Subgroup 1 tests. Subgroup 1 tests shall be performed on a production lot basis on 100 percent of the product supplied under this specification. Resistors that are out of resistance tolerance, or which experience a change in resistance greater than that permitted for the tests of this subgroup shall be removed from the lot. Only lots having not more than 10-percent rejects or one resistor, whichever is greater due to exceeding the specified resistance change limit, as a result of subgroup 1 tests shall not be furnished on orders. Corrective action shall be taken on such values and new pieces furnished.

TABLE VII. Group A inspection.

Inspection	Requirement paragraph	Test method paragraph	Sampling procedure
Subgroup 1 1/ 2/ Conditioning Contact resistance variation Total resistance 3/ Immersion	 3.8 3.9 3.11.1 3.12	 4.8.2 4.8.3 4.8.5.1 4.8.6	100 percent inspection
Subgroup 2 4/ Visual examination	3.33 to 3.34	4.8.1	See 4.6.3.2.3
Subgroup 3 5/ 6/ End resistance Actual effective electrical travel Dielectric withstanding voltage Insulation resistance Torque Thermal shock	 3.11.2 3.13 3.14 3.15 3.16 3.17	 4.8.5.2 4.8.7 4.8.8 4.8.9 4.8.10 4.8.11	See 4.6.3.2.4
Subgroup 4 5/ 7/ Solderability	3.18	4.8.13	See 4.6.3.2.5

1/ 100 percent solder dip may be performed prior to immersion (see appendix A).

2/ At the manufacturer's option, the determination of resistance change may be by any method which is within the accuracy requirements of this specification.

3/ Resistors shall meet this specified initial resistance tolerance. The resistance measurement made upon completion of the power conditioning test may be used if a measurement was made which can, without conversion, be directly related to nominal resistance value and tolerance.

4/ The manufacturer may request the deletion of the subgroup 2 visual examination test, provided an in-line or process control system for assessing and assuring the applicable requirements of the visual examination test can be validated and approved by the qualifying activity. Deletion of the test does not relieve the manufacturer from meeting this test requirement in case of dispute. If the design, material, construction, or processing of the part is changed, or if there are any quality problems, the qualifying activity may require resumption of the test.

5/ At the option of the manufacturer, subgroup 2, subgroup 3, and subgroup 4 may be performed concurrently with a separate set of samples.

6/ If the manufacturer can demonstrate that this test has been performed for 6 months with zero failures, the frequency of this test, with the approval of the qualifying activity, can be performed on an annual basis. If the design, material, construction, or processing of the part is changed, or if there are any quality problems or failures, the qualifying activity may require resumption of the original test frequency.

7/ The manufacturer may request the deletion of the subgroup 4 solderability test, provided an in-line or process control system for assessing and assuring the solderability of leads can be validated and approved by the qualifying activity. Deletion of the test does not relieve the manufacturer from meeting this test requirement in case of dispute. If the design, material, construction, or processing of the part is changed or if there are any quality problems, the qualifying activity may require resumption of the test.

4.6.3.2.2 Manufacturer's production inspection. If the manufacturer performs tests equal to or more stringent than those specified in group I, subgroup 1, table VI, as the final step of this production process, group A, subgroup 1 inspection may be waived and the data resulting from the manufacturer's production tests may be used instead. Authority to waive the subgroup 1 inspection shall be granted by the qualifying activity only. The following criteria must be complied with:

a. Tests are identical to or more stringent than those specified for subgroup 1 tests.

b. One hundred percent of the product supplied these tests.

c. Failure criteria are identical to, or more stringent than, those specified for subgroup 1 tests.

d. Lot rejection criteria are identical to, or more stringent than, those specified for subgroup 1 tests.

e. Once approved, future changes require approval from the qualifying activity.

4.6.3.2.3 Subgroup 2 tests. The subgroup 2 tests shall be performed on an inspection lot basis for ER parts. A random sample of resistors shall be selected in accordance with table VIII. In the event of one or more failures, the lot is rejected. The rejected lot may be re-screened and the defects removed and resubmitted to table VIII sample plan. If one or more defects are found in this second sample, the lot is rejected and shall not be supplied to this specification. (NOTE: This corrective action applies to the original quality defect found. If another defect type is found in the second sample, a re-screen for that defect is also permitted).

4.6.3.2.4 Subgroup 3 tests. Subgroup 3 shall be performed on an inspection lot basis for ER parts. A sample of 13 parts shall be randomly selected. If one or more defects are found, the lot shall be rescreened and defects removed. A new sample of 13 parts shall be randomly selected. If one or more defects are found in this second sample, the lot shall be rejected and shall not be supplied to this specification.

TABLE VIII. Sampling plans for ppm categories.

Lot size			Sample size ppm	Sample size subgroup 2
1	to	13	100 percent	100 percent
14	to	152	100 percent	13
126	to	150	125	13
151	to	280	125	20
281	to	500	125	29
501	to	1,200	125	34
1,201	to	3,200	125	42
3,201	to	10,000	125	50
10,001	to	35,000	294	60
35,001	to	150,000	294	74
15,0001	to	500,000	345	90
500,001	and over		435	102

4.6.3.2.5 Subgroup 4 (solderability). The subgroup 4 tests shall be performed on an inspection lot basis for ER parts. A sample shall be selected from each lot in accordance with table IX. As an option, the manufacturer may use electrical rejects from the subgroup 1 tests for all or part of the sample. If there are one or more defects, the lot is rejected. The manufacturer may use one of the following options for corrective action:

a. Each production lot that was used to form the failed inspection lot shall be individually submitted to the solderability test. Production lots that pass the solderability test are available for shipment. Production lots failing the solderability test can be submitted to the solder dip procedure in 4.6.3.2.5b.

b. The lot is submitted to a 100 percent solder dip using an approved solder dip process in accordance with the appendix A. A subsequent solderability test shall then be performed. If the lot passes, it is available for shipment; if the lot fails, the manufacturer may perform the hot solder dip one additional time. If the lot fails to pass, the lot is considered rejected and shall not be supplied to this specification.

TABLE IX. Solderability sampling plan.

Lot size	Sample size
1 to 3,200	5
3,201 to 10,000	8
10,001 to 35,000	13
35,001 and over	20

4.6.3.2.5.1 Disposition of samples. The solderability test is considered a destructive test and samples submitted to the solderability test shall not be supplied to this specification.

4.6.4 PPM assessment (non-ER and ER). The manufacturer shall establish and maintain a system for assessing the average outgoing quality in ppm of lots supplied to this specification. This ppm assessment should be based on inspections performed on each inspection lot, verify that resistors meet total resistance, and tolerance requirements (i.e., ppm). For ER resistors, this inspection shall occur after the group A, subgroup 1, 100 percent screens have been completed. In the event of one or more failures, the lot is rejected.

4.6.4.1 Sampling plan. Minimum sample sizes for inspection lots shall be selected in accordance with table IX. For non-ER resistors, the sampling system and plan used for the group A inspection (see 4.6.3.1) may be the basis for assessing ppm.

4.6.4.2 Rejected lots. Any rejected lot shall be segregated from new lots and those lots that have passed ppm assessment. A rejected lot may be rescreened for the quality characteristics found defective in the sample and any defects removed. A new second sample shall be randomly selected. If one or more defects are found, this lot is rejected and shall not be supplied to this specification.

4.6.4.3 PPM calculations. PPM calculations shall be based on the accumulated results of the initial sample. Calculations and exclusion shall be in accordance with EIA-554-1 and qualifying activity approval. (Note: PPM calculations shall not be based on the second sample submission for a rejected lot as described in 4.6.4.2).

4.7 Periodic group B inspection (ER only). Periodic inspection shall consist of group B inspection tests specified in table X, in the order shown. They shall be performed on sample units selected from lots that have passed the group A inspection. Except where the results of this inspection show noncompliance with the applicable requirements (see 4.7.5), delivery of products which have passed group A inspection shall not be delayed pending the results of periodic inspections.

TABLE X. Group B inspection.

Inspection	Requirement paragraph	Test method paragraph	Number of samples		Number of defectives
Quarterly Subgroup 1 Life	3.30	4.8.25	See 4.7.2.1		See 4.7.2.1
Quarterly Subgroup 2 1/ Resistance temperature characteristic Moisture resistance Contact resistance variation	3.19 3.20 3.9	4.8.14 4.8.15 4.8.3	12	6 highest 6 lowest	1
Quarterly Subgroup 3 2/ Rotational life Contact resistance variation Terminal strength	3.28 3.9 3.29	4.8.23 4.8.3 4.8.24	12		
Semiannually Subgroup 1 Resistance to soldering heat 1/ Immersion High temperature exposure 2/ Contact resistance variation 2/ Integrity of shaft 1/	3.25 3.12 3.27 3.9 3.10	4.8.20 4.8.6 4.8.22 4.8.3 4.8.4	12		1
Semiannually Subgroup 2 2/ Setability Low temperature operation Shock (specified pulse) Vibration, high frequency	3.21 3.26 3.22 3.23	4.8.16 4.8.21 4.8.17 4.8.18	12		
Semiannually Subgroup 3 1/ Resistance to solvents	3.31	4.8.26	3 any value		0

1/ If the manufacturer can demonstrate that this test has been performed for five consecutive times with zero failures, the frequency of this test, with approval of the qualifying activity, can be performed on an annual basis. If the design, material, construction, or processing of the part is changed, or if there are any quality problems or failures, the qualifying activity may require resumption of the original test frequency.

2/ If the manufacturer can demonstrate that this test has been performed for five consecutive times with zero failures, these tests, with approval of the qualifying activity, can be deleted. The manufacturer however, shall perform these tests every three years after the deletion as part of long term design verification. If the design, material, construction, or processing of the part is changed, or if there are any problems, the qualifying activity may require resumption of the specified testing. Deletion of testing does not relieve the manufacturer from meeting the test requirement in case of dispute.

4.7.1 Sampling plan. If more than 1,000 resistors of any style or style grouping are produced over the maintenance period, the group B tests shall be performed as specified. If the production rate is less than 1,000 resistors for any style or style grouping over the maintenance period then the monthly, quarterly, or semi-annual group B inspection may be postponed until at least 1,000 resistors of that style or style grouping are produced (except for the monthly life test). In any case, the monthly tests shall be performed at least once every 3 months. The quarterly tests shall be performed at least every 6 months and the semi-annual tests shall be performed at least once every year. This is waived if the semi-annual tests shall be performed at least once every year. This requirement is waived if the manufacturer has obtained a reduced inspection status through the qualifying activity.

All qualified styles may be grouped together in a single sample. This can be accomplished by proportion based on manufacturing percentages by styles, equally divided by style, or by establishing an alternating style sequence. In order to incorporate a style sample grouping, a written description must be presented and approved by the qualifying activity. This plan must assure that the grouping only combines styles of the same basic design, encapsulation material, and the same element type.

4.7.2 Quarterly.

4.7.2.1 Subgroup 1. Samples shall be accumulated from each inspection lot and placed on extended life (see 4.8.25) of for the full 10,000 hour life test. A sufficient number of samples shall be selected from each lot by the manufacturer so that the maintenance of FR requirements are complied with, within the specified maintenance period. In any event, a minimum of 5 samples shall be selected from each lot. As far as practicable, the manufacturer shall select the resistance values so that all resistance decades produced during the maintenance period are represented.

4.7.2.2 Subgroup 2 and subgroup 3. Quarterly, the specified number of sample units shall be subjected to the tests specified in table X.

4.7.3 Semiannual. Sample units and tests shall be as specified in table X.

4.7.4 Disposition of sample units. Sample units which have been subjected to group B inspection shall not be delivered on the contract or purchase order.

4.7.5 Noncompliance. If a sample fails to pass group B inspection, the manufacturer shall notify the qualifying activity and the cognizant inspection activity of such a failure and take corrective action on the materials or processes, or both, as warranted, and on all units of product which can be corrected and which were manufactured under essentially same materials and processes, and which are considered subject to the same failure. For ER level, acceptance and shipment of the product shall be discontinued until corrective action; acceptable to the qualifying activity has been taken. For C level, stop shipment may not be necessary depending on the nature of the failure. After corrective action has been taken, group B inspection shall be repeated on additional sample units (all inspections, or the inspection which the original sample failed, at the option of the qualifying activity). Group A inspection may be reinstituted; however, final acceptance and shipment shall be withheld until the group B inspection has shown that the corrective action was successful.

4.8 Methods of inspection.

4.8.1 Visual and mechanical examination. Resistors shall be examined to verify that the materials, design, construction, physical dimensions, marking, and workmanship are in accordance with the applicable requirements (see 3.1, 3.3, to 3.3.2 inclusive, 3.4 to 3.5.11 inclusive, and 3.33 to 3.34 inclusive).

4.8.2 Conditioning (see 3.8). Resistors shall be conditioned in accordance with method 108 of MIL-STD-202. The following details and exceptions shall apply:

a. Method of mounting: Supported by their terminals (resistors not mounted on life test chassis). Resistors shall be so arranged that the temperature of any one resistor shall not appreciably influence the temperature of any other resistor. There shall be no undue draft on the resistors.

b. Temperature and tolerance: $25^{O}C$, $+10^{O}C$, $-5^{O}C$.

c. Initial measurements: Initial total resistance shall be measured at $25^{O}C$, $+10^{O}C$, $-5^{O}C$ after mounting as specified in 4.8.5.1. This initial measurement shall be used as the reference temperature for all subsequent measurements.

d. Operating condition: DC continuous working voltage or a continuous working voltage from an ac supply at commercial line frequency and waveform equivalent to 1.5 times the specified wattage (see 3.1), shall be applied between the end terminals intermittently 1.5 hours "on" and 0.5 hour "off" for a minimum of 50 hours +8 hours, -0 hours at a temperature of $25^{O}C$, $+10^{O}C$, $-5^{O}C$. Each resistor shall dissipate 1.5 times the rated wattage, but not to exceed the maximum voltage specified for each style (see 3.1).

e. Measurement after conditioning: Total resistance shall be measured at the end of the 50 hours+8 hours, -0 hours as specified in 4.8.5.1 after load has been removed and the resistors stabilized.

f. Examination after conditioning: Resistors shall be examined for evidence of mechanical damage (see 3.5.12).

g. Test duration: 50 hours +8 hours, -0 hours.

4.8.3 Contact resistance variation (see 3.9). Contact resistance variation shall be measured with the measuring circuit shown on figure 3, or its equivalent. The operating shaft shall be rotated in both directions through 90 percent of the actual effective-electrical travel for a total of 6 cycles. If the product passes on any one of the first three cycles, then the product is acceptable. Only the last 3 cycles shall count in determining whether or not a contact resistance variation is observed at least twice in the same location, exclusive of the roll-on or roll-off points where the contact arm moves from the termination, on or off, the resistance element. Group A, subgroup 1, product acceptance may be determined based on one cycle minimum where compliance to the specification is demonstrated. The rate of rotation of the operating shaft shall be such that the wiper completes 1 cycle in 5 seconds, minimum, to 2 minutes, maximum.

4.8.4 Integrity of shaft (see 3.10).

4.8.4.1 Mounting. Resistors shall be mounted on an appropriate mounting fixture with their bodies restrained from movement.

4.8.4.2 Pull force. A force of 5 pounds (for styles RJR12 and RJR24) and 2 pounds (for styles RJR26 and RJR28) shall be applied along the axis of the operating shaft, away from the body of the resistor. The force shall be maintained for a minimum of 1 minute.

4.8.4.3 Perpendicular force. A force of 2 pounds shall be applied in a direction perpendicular to the axis of the operating shaft for a minimum of 1 minute.

4.8.4.4 Examination after test. Resistors shall be examined for evidence of shaft breakage.

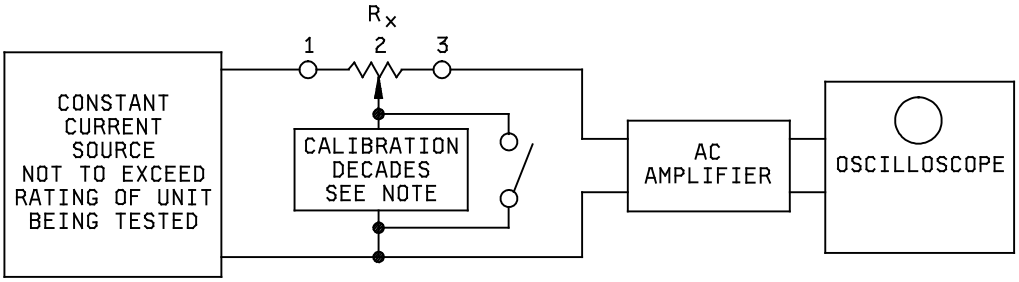

R_X:	Test specimen.
Oscilloscope bandwidth:	100 Hz to 50 kHz.
Minimum input impedance:	At least 10 times the nominal resistance being tested.

NOTE: At the calibration of the decade, terminals 1 and 2 must be coincident. Calibration decade is to be set for the contact-resistance (CRV) level of the specified nominal resistance being tested.

FIGURE 3. Contact resistance variation measuring circuit.

4.8.5 DC resistance (see 3.11). Resistors shall be tested in accordance with method 303 of MIL-STD-202. The following details shall apply:

a. Measuring apparatus: Different types of measuring test equipment (multimeters, bridges, or equivalent) are permitted to used, provided the equipment is the same model, or if it can be shown that the performance of the equipment is equivalent to or better.

b. Test voltage: Measurements of resistance shall be made by using the test voltages specified in table XI. The test voltage chosen, whether it be the maximum or a lower voltage which would still provide the sensitivity required, shall be applied across the terminals of the resistor. This same voltage shall be used whenever a subsequent resistance measurement is made.

TABLE XI. DC resistance test voltage. 1/

Total resistance, nominal (in ohms)					Maximum test voltage (in volts)
	10	to	100	Incl.	1.0
over	100	to	1,000	Incl.	3.0
over	1,000	to	10,000	Incl.	10.0
over	10,000	to	0.1 megohm	Incl.	30.0
over	0.1 megohm				100.0

1/ The critical resistance value is the maximum standard resistance value which will dissipate full wattage when the maximum continuous working voltage is applied.

4.8.5.1 Total resistance. Total resistance shall be measured as specified in 4.8.5, between the resistance-element end terminals (terminals 1 and 3 on figure 1), with contact arm positioned against a stop. The positioning of the contact arm and terminal shall be the same for all subsequent measurements of the total resistance on the same specimen (see 3.11.1).

4.8.5.2 End resistance. The contact arm shall be positioned at the extreme counterclockwise limit of mechanical travel, and the resistance shall be measured as specified in 4.8.5 between the contact arm and the corresponding end terminal. The contact arm shall then be positioned at the extreme clockwise limit of the mechanical travel, and the resistance shall be measured as specified in 4.8.5 between the contact arm and the corresponding end terminal. During this test, precaution shall be taken to insure that rated current of the resistance element is not exceeded. Clockwise signifies the direction of rotation of the operating shaft when the resistor is viewed from the shaft end (see 3.11.2).

4.8.6 Immersion (not applicable to L type terminations) (see 3.12). The surface shall be cleaned of any foreign matter immediately before immersion.

a. Precondition: The resistors shall be preconditioned in an oven at 125°C ±5°C for 13 ±2 minutes, or use a fluorocarbon bath maintained at 125°C ±5°C for a period of 1.5 ±0.5 minutes. Upon completion of precondition, allow resistors to stabilize to room temperature for approximately 13 ±2 minutes.

b. Immersion: Resistors shall be tested in accordance with the following procedure:

(1). The resistors shall be immersed (not to exceed 30 samples) into a bath of fluorocarbon held at 85 ^{O}C +5 ^{O}C, -0 ^{O}C for a period of 60 seconds ±5 seconds (stabilization & observation cycle). The resistors under test shall be completely submerged in the bath, with no part at a depth of less than 1 inch (2.54 cm).

(2). Following the stabilization cycle, the resistor shall remain submerged and be shaken for a maximum of 5 seconds (Agitation & trapped air removal cycle).

(3). The resistors shall remain in the bath for a period of 60 seconds ±5 seconds to complete the test. (Final observation cycle; Total test time = 125 seconds, nominal). During the test sequence, visually examine resistors for inadequate seals, as evidenced by a continuous stream of bubbles emanating from any concentrated point on the resistor.

(4). If all resistor test samples pass immersion requirements as outlined in 3.12, Isolate 5 random resistors for Part C preconditioning and dye penetrant test.

c. Dye penetrant verification: A five piece sample of the product exhibiting inconclusive evidence of compliance to immersion requirements (see 3.12), shall be preconditioned in an oven stabilized at 125°C ±5°C for 13 ±2 minutes, or preconditioned in a fluorocarbon bath maintained at 125°C ±5°C for 1 minute ±5 seconds and immediately upon removal (within 5 seconds), shall be submerged in a dye penetrant solution for 30 seconds minimum. The dye penetrant solution shall consist of 0.1 grams per liter, or equivalent, of a soluble stain dye such as crystal violet dissolved in deionized water maintained at room ambient. Upon removal from the dye solution, the sample shall be held at room temperature until external surfaces are dry. The sample shall be carefully opened and examined under 10X to 30X for evidence of dye penetration into the sealed cavity. Evidence of such penetration verifies loss of immersion seal, and lack of such evidence verifies compliance to the requirements.

4.8.7 Actual effective electrical travel (see 3.13). The actual effective electrical travel shall be measured by placing the resistor in a suitable device and circuit which will indicate both angular position of the operating shaft and voltage output. The actual effective electrical travel will be the number of turns or degrees of the operating shaft in which a change in contact-arm position gives a measurable change in voltage output.

4.8.8 Dielectric withstanding voltage (see 3.14).

4.8.8.1 Atmospheric pressure. The resistors shall be tested in accordance with method 301 of MIL-STD-202. The following details shall apply:

a. Special preparations: The resistors shall be mounted on metal plates of sufficient size to extend beyond the resistor extremities, and in such a manner that measurements can be made between the terminals tied together and any other external metal parts.

b. Magnitude of test voltage: As specified in 3.1.

c. Nature of potential: From an alternating-current (ac) supply at commercial-line frequency and waveform. This potential shall be applied for 1 minute.

d. Points of application of test voltage: Between the terminals connected together and all external metal portions of the resistors and metal-mounting plate.

e. Examinations and measurements: During the tests, the leakage current shall be monitored and the resistors examined for evidence of arcing and breakdown. At the conclusion of the test, resistors shall be examined for evidence of damage.

4.8.8.2 Barometric pressure. Resistors shall be tested in accordance with method 105 of MIL-STD-202. The following details and exceptions shall apply:

a. Method of mounting: As specified in 4.8.8.1a.

b. Test condition: C.

c. Period of time at reduced pressure prior to application of potential: 1 minute.

d. Test during subjection to reduced pressure: Voltage as specified (see 3.1) from an ac supply at commercial line frequency and waveform shall be applied for 1 minute.

e. Points of application: As specified in 4.8.8.1d.

f. Examinations and measurements: As specified in 4.8.8.1e.

4.8.9 Insulation resistance (see 3.15). Resistors shall be tested in accordance with method 302 of MIL-STD-202. The following details shall apply:

a. Test condition: A or B, whichever is more practicable.

b. Special preparation: As specified in 4.8.8.1a.

c. Points of measurement: As specified in 4.8.8.1d.

4.8.10 Torque.

4.8.10.1 Operating (see 3.16.1). The torque required to move the contact arm on the resistance element shall be determined at approximately 10 percent, 50 percent, and 90 percent of actual effective-electrical travel by the torque-wrench method or by any other method approved by the Qualifying Activity.

4.8.10.2 Clutch (see 3.16.2). The contact arm shall be adjusted to each extreme limit of mechanical travel, and sufficient torque shall be applied to the lead-screw actuator to permit the contact arm to idle for 25 complete mechanical turns of the lead-screw actuator. During idle, a suitable electrical indicating device connected between the contact-arm terminal and the adjacent end terminal shall be observed for electrical continuity. After idle, the operating shaft shall be rotated in the opposite direction and the indicating device observed to determine if the contact arm reversed direction.

4.8.10.3 Stop (when applicable) (see 3.16.3). Resistors shall be mounted by their normal mounting means. The contact arm shall then be rotated to each extreme limit of mechanical rotation, and the specified torque (see 3.1), applied through the operating shaft to the stop.

4.8.11 Thermal shock (see 3.17). Resistors shall be tested in accordance with method 107 of MIL-STD-202. The following details and exceptions shall apply:

a. Test condition: F.

b. Measurements before cycling: Total resistance and setting stability shall be in as specified in 4.8.5.1 and 4.8.12, respectively.

c. Measurements after cycling: Setting stability, total resistance, and continuity shall be measured as specified in 4.8.12 and 4.8.5.1, respectively. Continuity of the contact arm shall be verified by connecting a vacuum-tube voltmeter or suitable indicating device, between the contact arm terminal and the counterclockwise end terminal. The applied voltage shall be in accordance with table XI.

d. Examination after test: Resistors shall be examined for evidence of mechanical damage (see 3.5.12).

4.8.12 Setting stability. The contact arm shall be set at approximately 40 percent of the actual effective electrical travel. An adequate dc test potential shall be applied between the end terminals. The voltage between the end terminals, and the voltage between one end terminal and the contact arm, shall be measured and applied to the following formula:

$$\text{Setting in percent} = \frac{E_1 \times 100}{E_2}$$

Where:
E_1 = Voltage across one end terminal and the contact arm terminal.
E_2 = Voltage across the end terminals.

The difference between the initial measurements made before the environmental test and the measurement made after the test indicates the setting stability in percent.

4.8.13 Solderability (see 3.18). Resistors shall be tested in accordance with method 208 of MIL-STD-202. All pin terminals of each resistor shall be tested.

4.8.14 Resistance-temperature characteristic (see 3.19). Resistors shall be tested in accordance with method 304 of MIL-STD-202. The following details shall apply:

a. Test temperatures: As specified in table XII.

b. Measurements at the end of each period: Total resistance shall be measured as specified in 4.8.5.1, (wiper against stop, measured through end terminals) at temperature maintained during the period.

TABLE XII. Resistance-temperature characteristics.

Sequence	Temperature in ^{O}C ($\pm$ 3°C)
1	25 1/
2 2/	-15
3	-55
4	25 1/
5 2/	62
6	150

1/ This temperature shall be considered the reference temperature for each of the succeeding temperatures.

2/ Not applicable in conformance inspection.

Note: At the option of the manufacturer, the reverse sequence may be as follows:

1. 25 $\pm$ 3°C
2. 65 $\pm$ 3°C
3. 150 $\pm$ 3°C
4. 25 $\pm$ 3°C
5. -25 $\pm$ 3°C
6. -55 $\pm$ 3°C

4.8.15 Moisture resistance (see 3.20). The resistors shall be tested in accordance with method 106 of MIL-STD-202. The following details and exceptions shall apply:

a. Mounting: Resistors shall be clamped or otherwise mounted with terminals exposed on a stainless-steel panel of sufficient size to extend beyond the resistor extremities, and in such a manner as to allow electrical connections to be made to the terminals.

b. Initial measurement: Immediately following the initial drying period, total resistance shall be measured as specified in 4.8.5.1.

c. Polarization and loading voltage: The resistors shall be divided into two equal groups; one group shall be subjected to polarization and the other group to load.

(1) Polarization: During steps 1 to 6 inclusive, a 100 volt dc potential shall be applied with the positive lead connected to the resistor terminals tied together, and the negative lead connected to the mounting plate.

(2) Loading voltage: During the first 2 hours of steps 1 and 4, a dc test potential equivalent to 100 percent rated wattage shall be applied to the resistors.

d. Test procedure: The moisture resistance cycling requirements shall be as follows: For qualification inspection - 20 cycles; For group B inspection - 10 cycles. Every 6 months, the group B quarterly test shall be - 20 cycles.

e. Final measurements: Upon completion of step 6 of the final cycle, the resistors shall be removed from the chamber and air dried for one-half hour at room ambient conditions. Samples shall not be subjected to forced air drying. The total resistance and insulation resistance shall then be measured as specified in 4.8.5.1 and 4.8.9, respectively. The subsequent 24-hour conditioning period and measurements do not apply.

f. Examination after test: Resistors shall be examined for evidence of mechanical damage (see 3.5.12).

g. Steps 7A and 7B: Steps 7A and 7B are not applicable to this specification.

4.8.16 Setability (see 3.21). The resistor wiper shall be set at approximately 30 percent, 50 percent, and 75 percent of mechanical rotation. A dc voltage of up to 2.5 volts shall be applied across the end terminals, and the wiper shall then be adjusted smoothly without abrupt voltage change at each test point. The setability error shall be within the limits specified.

4.8.17 Shock (specified pulse) (see 3.22). Resistors shall be tested in accordance with method 213 of MIL-STD-202. The following details and exceptions shall apply:

a. Mounting: Resistors shall be mounted by their normal mounting means, with their bodies restrained from movement, on an appropriate mounting fixture.

b. Test leads: Test leads used during this test shall be no larger than AWG size 22 stranded wire, so that the influence of the test lead on the resistor will be held to a minimum. The test lead length shall be no longer than necessary.

c. Measurements before shock: Total resistance and setting stability shall be measured as specified in 4.8.5.1 and 4.8.12.

d. Test condition: I.

e. Measurements during shock: Each resistor shall be monitored to determine electrical discontinuity of the resistance element, and between the contact arm and element, by a method that shall at least be sensitive enough to monitor or register, automatically, any electrical discontinuity of 0.1 millisecond or greater duration.

f. Measurements after shock: Setting stability and total resistance shall be measured as specified in 4.8.12 and 4.8.5.1, respectively.

g. Examination after shock: Resistors shall be examined for evidence of mechanical damage (see 3.5.12).

4.8.18 Vibration, high frequency (see 3.23). Resistors shall be tested in accordance with method 204 of MIL-STD-202. The following details and exceptions shall apply:

a. Mounting: As specified in 4.8.17a.

b. Test leads: As specified in 4.8.17b.

c. Measurements before vibration: As specified in 4.8.17c.

d. Test condition: D.

e. Measurements during vibration: As specified in 4.8.17e.

f. Measurements after vibration: As specified in 4.8.17f.

g. Examination after vibration: Resistors shall be examined for evidence of mechanical damage (see 3.5.12).

4.8.19 Salt spray (corrosion) (see 3.24). The resistors shall be tested in accordance with method 101 of MIL-STD-202. The following details shall apply:

a. Special mounting: As specified in 4.8.15a.

b. Test condition: A.

c. Examination after exposure: Resistors shall be examined for corrosion and mechanical operation.

4.8.20 Resistance to soldering heat (not applicable to L type terminals) (see 3.25). The resistors shall be tested in accordance with method 210 of MIL-STD-202. The following details shall apply:

a. Measurement before test: Total resistance shall be measured as specified in 4.8.5.1.

b. Test condition: C - except time shall be 10 seconds ±1 second.

c. Measurement after test: One hour after completion of test, the total resistance shall be measured as specified in 4.8.5.1. Resistors shall be examined for evidence of mechanical damage (see 3.5.12).

4.8.21 Low temperature operation (see 3.26).

4.8.21.1 Mounting. The resistors shall be mounted in such a manner as to allow electrical connections to be made to the terminals.

4.8.21.2 Procedure. Total resistance shall be measured as specified in 4.8.5.1. The resistors shall be placed in a chamber at room temperature. The temperature shall be gradually decreased to -55°C +0°C, -5°C within a period of not less than 1.5 hours. For conformance inspection only, and at the option of the manufacturer, the resistors may be placed in the chamber when the chamber is already at the extreme low temperature. After one hour of stabilization at this temperature, setting stability shall be measured as specified in 4.8.12. Full rated continuous working voltage (see 3.1 and 3.7) shall be applied for 45 minutes. The resistors may be loaded individually or in parallel. Fifteen minutes, +5 minutes, -0 minutes after removal of voltage, setting stability shall be measured as specified in 4.8.12. The temperature in the chamber shall be gradually increased to room temperature within a period of not more than 8 hours. The resistors shall be removed from the chamber, and maintained at a temperature of 25°C ± 5°C for a period of approximately 24 hours. Total resistance shall be measured as specified in 4.8.5.1. Resistors shall then be examined for evidence of mechanical damage (see 3.5.12).

4.8.22 High temperature exposure (see 3.27).

4.8.22.1 Mounting. The resistors shall be mounted in such a manner as to allow electrical connections to be made to the terminals.

4.8.22.2 Procedure. Total resistance and setting stability shall be measured as specified in 4.8.5.1 and 4.8.12, respectively. The resistors shall be exposed to an ambient temperature of 150°C +5°C, -0°C for a period of 1,000 hours ±8 hours. Not less than 2 hours after the end of the exposure period, setting stability and total resistance shall be measured as specified in 4.8.12 and 4.8.5.1, respectively. Dielectric withstanding voltage (at atmospheric pressure), and insulation resistance shall be measured as specified in 4.8.8.1 and 4.8.9, respectively. Resistors shall then be examined for evidence of mechanical damage (see 3.5.12).

4.8.23 Rotational life (see 3.28).

4.8.23.1 Mounting. Resistors shall be suitably mounted in such a manner as to allow electrical connections to be made to the terminals and concurrent contact arm actuation of each “pair” of resistors. The resistors, ganged in pairs, and each pair shall be connected in series, as shown on figure 4, so that a nominally constant current flows through the resistors, irrespective of the contact-arm position during the turning of the lead screw actuators.

4.8.23.2 Procedure. Total resistance shall be measured as specified in 4.8.5.1. A dc potential, equivalent to that required to dissipate rated wattage across the entire resistive element of resistors having the same nominal total resistance as those under test, shall then be applied as shown on figure 4. The operating shaft shall be continuously cycled through 90 percent to 100 percent of the actual effective electrical travel, at the rate of one cycle for 2.5 minutes, for the multiturn units and 5 seconds to 2 minutes for single turn units, for a total of 200 cycles. A cycle shall consist of travel through 90 to 100 percent of actual effective electrical travel and return to the starting point. At no time during this test shall the contact arm be allowed to idle at either end of the travel. After rotation, total resistance shall be measured as specified in 4.8.5.1. Resistors shall be examined for evidence of mechanical damage (see 3.5.12).

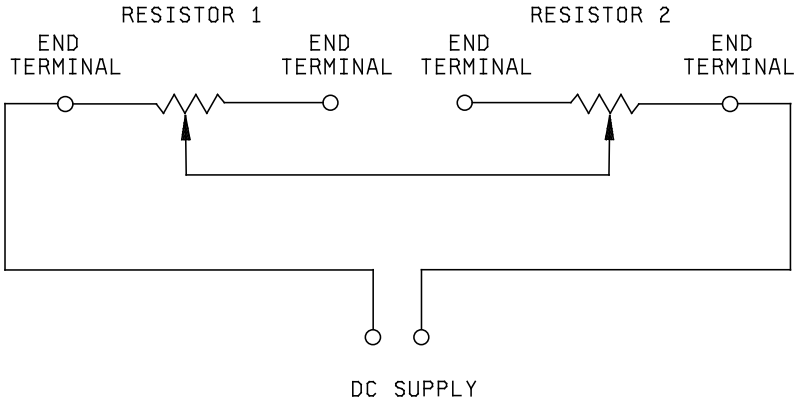

FIGURE 4. Rotational life test circuit.

4.8.24 Terminal strength (see 3.29).

4.8.24.1 Pull (applicable to all terminal types). Resistors shall be tested in accordance with method 211 of MIL-STD-202. The following details and exception shall apply:

a. Test condition: A. Applied force - 2 pounds. Resistors clamped by the resistor body, force applied to each lead individually.

b. Measurement after test: Resistors shall be examined for evidence of mechanical damage (see 3.5.12), and tested for electrical continuity.

4.8.24.2 Push (applicable to all terminals except type L). Resistors shall be tested in accordance with method 211 of MIL-STD-202. The following details and exceptions shall apply:

a. Test condition: A, except force shall be applied in the direction toward the resistor body, force applied to each terminal individually.

b. Measurement after test: Resistors shall be examined for evidence of mechanical damage (see 3.5.12), and tested for electrical continuity.

4.8.24.3 Bend (applicable to terminal types P, W, X, and Y only). Resistors shall be firmly clamped and each terminal shall be bent through 90° at a point .125 inch from the body of the resistor, with the radius of curvature at the bend approximately .03125 inch. The pin shall be returned to the original position, bent 90° in the opposite direction, and again returned to the original position. At the conclusion of the test, the resistors shall be examined for evidence of mechanical damage (see 3.5.12) and tested for electrical continuity.

4.8.25 Life (see 3.30). Resistors shall be tested in accordance with method 108 of MIL-STD-202. The following details and exceptions shall apply:

a. Method of mounting: Resistors shall be mounted by their normal mounting means on a .0625-inch thick, glass base, epoxy laminate. The resistors shall be so arranged that the temperature of any one resistor shall not appreciably influence the temperature of any other resistor. There shall be no undue draft over the resistors.

b. Test temperature and tolerance: $85^{O}C \pm 5^{O}C$.

c. Initial measurement: Total resistance shall be measured as specified in 4.8.5.1.

d. Operating conditions: Rated dc or ac working voltage at commercial line frequency and waveform (see 3.1) shall be applied intermittently to terminals 1 and 3 of the resistor, 1.5 hours "on" and 0.5 hours "off" the time duration specified in 4.8.25f at the test temperature. Each resistor shall dissipate rated wattage, but shall not exceed maximum voltage. Adequate precaution shall be taken to maintain the constant voltage on the resistor.

e. Test condition: 2,000 hours for qualification with all samples continued to 10,000 hours.

f. Measurements during test:

(1) Qualification inspection: Resistance (see 4.8.5), shall be measured at the end of the 0.5 hour "off" periods after 168 hours +72 hours, -24 hours; 504 hours +72 hours, -24 hours; 1,008 hours +72 hours, -24 hours; and 2,016 hours +96 hours, -24 hours have elapsed. Units continued on test shall be measured at intervals above 2,000 hours in accordance with 4.8.25f(2).

(2) Extended life testing: Resistance (see 4.8.5), shall be measured at the end of the 0.5 hour "off" periods after 168 hours +72 hours, -24 hours; 504 hours +72 hours, -24 hours; 1,008 hours +72 hours, -24 hours; 2,016 hours +96 hours, -24 hours; and every 2,000 hours +96 hours, -24 hours thereafter until the required extended life period (10,000 hours +120 hours, -0 hours) have elapsed. Measurements shall be made as near as possible to the specified time but may be adjusted so that measurements need not be made during other than normal working days.

g. Examination after test: Resistors shall be examined for evidence of mechanical damage (see 3.5.12).

4.8.26 Resistance to solvents (see 3.31). Resistors shall be tested in accordance with method 215 of MIL-STD-202. The following details shall apply:

a. The marked portion of the resistor body shall be brushed.

b. The number of sample units shall be as specified in tables VI and X, as applicable.

c. Resistors shall be examined for evidence of mechanical damage (see 3.5.12) and legibility of markings.

4.8.27 Low temperature storage (see 3.32).

4.8.27.1 Mounting. Resistors shall be mounted by their normal mounting means and in such a position with respect to the air stream that the mounting offers substantially no obstruction to the flow of air across and around the resistors.

4.8.27.2 Procedure. Total resistance shall be measured as specified in 4.8.5.1. Within one hour after this measurement, the resistor shall be placed in a cold chamber at a temperature of -65°C $\pm$ 2^{O}C for a period of 24 hours $\pm$ 4 hours. The resistors shall then be removed from the chamber and maintained at a temperature of 25°C $\pm$ 5°C until thermal stabilization is achieved. Total resistance shall then be measured as specified in 4.8.5.1. Resistors shall then be examined for evidence of mechanical damage (see 3.5.12).

5. PACKAGING

5.1 Packaging. For acquisition purposes, the packaging requirements shall be as specified in the contract or order (see 6.2). When packaging of materiel is to be performed by DoD or in-house contractor personnel, these personnel need to contact the responsible packaging activity to ascertain packaging requirements. Packaging requirements are maintained by the Inventory Control Point's packaging activity within the Military Service or Defense Agency, or within the military services system commands. Packaging data retrieval is available from the managing Military Department's or Defense Agency's automated packaging files, CD-ROM products, or by contacting the responsible packaging activity.

6. NOTES

(This section contains information of a general or explanatory nature that may be helpful, but is not mandatory.)

6.1 Intended use. Resistors covered by this specification are intended for use in electronic equipment, and are used for matching, balancing, adjusting circuit variables in computers, telemetering equipment, and other critical applications. Resistors covered by this specification are unique due to the fact that these devices must be able to operate satisfactorily in military systems under the following demanding conditions: 20Gs of high frequency vibration, 100 Gs of shock (specified pulse), undergo moisture resistance, setability and salt corrosion test. In addition these military requirements are verified under a qualification system. Commercial components are not designed to withstand these military environmental conditions.

6.2 Acquisition requirements. Acquisition documents should specify the following:

a. Title, number, and date of this specification, and the complete PIN (see 1.2).

b. Unless otherwise specified (see 2.1), the versions of the individual documents referenced will be those in effect on the date of release of the solicitation.

c. Packaging instructions (see 5.1).

d. Allowable substitution (see 3.33.4 and 3.33.5).

e. Terminal lead lengths requirements (applicable to MIL-PRF-39035/2 (RJR24) only).

* 6.3 Qualification. With respect to products requiring qualification, awards will be made only for products which are, at the time of award of contract, qualified for inclusion in the Qualified Products List QPL-39035 whether or not such products have actually been so listed by that date. The attention of the contractors is called to these requirements, and manufacturers are urged to arrange to have the products that they propose to offer to the Federal Government tested for qualification in order that they may be eligible to be awarded contracts or orders for the products covered by this specification. Information pertaining to qualification of products may be obtained from DLA Land and Maritime, ATTN: VQP, P.O. Box 3990, Columbus, Ohio 43218-3990; http://www.landandmaritime.dla.mil/programs/qmlqpl/. An online listing of products qualified to this specification may be found in the Qualified Products Database (QPD) at https://assist.dla.mil.

6.4 Selection and use information. Equipment designers should refer to MIL-HDBK-199, "Resistors, Selection and Use of", for a selection of standard resistor types and values for new equipment design. All applications and use information concerning these resistors are also provided in MIL-HDBK-199.

6.5 High resistance and voltages. Where voltages higher than 250 volts rms are present between the resistor circuit and grounded surface on which the resistor is mounted, or where the dc resistance is so high that the insulation resistance to ground is an important factor, secondary insulation to withstand the conditions should be provided between the resistor and mounting or between the mounting and ground.

6.6 Mounting of resistors. Resistors should not be mounted by their flexible wire leads. Mounting hardware should be used. Printed circuit types are frequently terminal mounted, although brackets may be necessary for a high shock and vibration environment.

6.7 Resistance temperature characteristic. Consideration should be given to temperature rise and ambient temperature of resistors under operation, in order to allow for the change in resistance due to resistance temperature characteristic.

6.8 Reduction of power rating. When only a portion of the resistance element is engaged, the wattage is reduced in directly the same proportion as the resistance.

6.9 Stacking of resistors. When stacking of resistors, care should be taken to compensate for the added rise in temperature by derating the wattage rating accordingly.

6.10 MIL-PRF-22097 substitution data. Resistors of this specification, regardless of the their failure rate designation, are substitutes for resistors of the same resistance value, tolerance, and performance characteristics specified in the inactive for design detail specification of MIL-R-22097 as follows:

Substitute specification	Specification sheets inactive for new design
MIL-PRF-39035/1	MIL- PRF-22097/2
MIL-PRF-39035/2	MIL- PRF-22097/4
MIL-PRF-39035/3	MIL- PRF-22097/5
MIL-PRF-39035/4	MIL- PRF-22097/6

6.11 Contact corrosion. Contact corrosion may develop at the point where the wiper makes contact with the element, if a current of 25 microamps or greater is not maintained.

6.12 Retinning leads. If retinning (hot solder dip) of the leads is required, see appendix.

6.12.1 Tin whisker growth. The use of alloys with tin content greater than 97 percent, by mass, may exhibit tin whisker growth problems after manufacture. Tin whiskers may occur anytime from a day to years after manufacture and can develop under typical operating conditions, on products that use such materials. Conformal coatings applied over top of a whisker-prone surface will not prevent the formation of tin whiskers. Alloys of 3 percent lead, by mass, have shown to inhibit the growth of tin whiskers. For additional information on this matter, refer to ASTM-B545 (Standard Specification for Electrodeposited Coatings of Tin).

6.13 Subject term (key word) listings.

Ohmic
Potentiometer
Resistance
Trimmer
Multiturn

6.14 Environmentally preferable material. Environmentally preferable materials should be used to the maximum extent possible to meet the requirements of this specification. As of the dating of this document, the U.S. Environmentally Protection Agency (EPA) is focusing efforts on reducing 31 priority chemicals. The list of chemicals and additional information is available on their website: http://www.epa.gov/osw/hazard/wastemin/priority.htm. Use of the materials on the list should be minimized or eliminated unless needed to meet the requirements specified herein (see section 3).

6.15 Amendment notification. The margins of this specification are marked with asterisk to indicate modification generated by this amendment. This was done as a convenience only and the Government assumes no liability whatsoever for any inaccuracies in these notations. Bidders and contractors are cautioned to evaluate the requirements of this document based on the entire content irrespective of the marginal notations.

APPENDIX A

PROCEDURE FOR QUALIFICATION INSPECTION

A.1 SCOPE

A.1.1 Scope. This appendix details the procedures for submission of samples for qualification inspection of resistors covered by this specification. The procedure for extending qualification of the required sample to other resistors covered by this specification is also outlined herein. This is a mandatory part of the specification. The information contained herein is intended for compliance.

A.2 APPLICABLE DOCUMENTS

A.2.1 General. The documents listed in this section are specified in sections 3, 4 and 5 of this specification. This section does not include documents cited in other sections of this specification or recommended for additional information or as examples. While every effort has been made to ensure the completeness of this list, document users are cautioned that they must meet all specified requirements documents cited in sections 3, 4 and 5 of this specification, whether or not they are listed.

A.2.2 Government documents.

A.2.2.1 Specifications, standards, and handbooks. The following specifications, standards, and handbooks form a part of this document to the extent specified herein. Unless otherwise specified, the issues of these documents are those cited in the solicitation (see 6.2).

DEPARTMENT OF DEFENSE STANDARDS

MIL-STD-1276 - Leads for Electronic Component Parts

* (Copies of these documents are available online at http://quicksearch.dla.mil).

A.2.3 Order of precedence. Unless otherwise noted herein or in the contract, in the event of a conflict between the text of this document and the references cited herein (except for related specification sheets), the text of this document takes precedence unless otherwise noted. Nothing in this document, however, supersedes applicable laws and regulations unless a specific exemption has been obtained.

A.3. SUBMISSION

A.3.1 Product levels. Qualification of the C (non-ER) level is predicated upon meeting the ER qualification requirements for FR level M (see A.4.1) and the completion of the qualification lot through the 10,000 hour life test. The procedure for submitting samples to become qualified to the initial FR level M is specified in A.3.2 of this appendix.

A.3.2 Sample. The sample size and test routine for each style shall be as indicated in table A-I. After qualification has been granted, no change shall be made in materials, design, or construction without prior notification to the qualifying activity.

A.4. EXTENT OF QUALIFICATION

A.4.1 Extent of qualification. The resistance range included in the qualification of any one resistor style will be between the highest and lowest resistance values inspected. Qualification of characteristic H is basis for qualification of F and C, qualification of characteristic F is basis for qualification of characteristic C. Characteristic C qualifies characteristic C only. Qualification of one terminal type may be extended to other terminal types provided the internal construction is the same and additional testing is performed in accordance with table A-I. The extent of qualification between FR levels shall be specified in table A-II.

APPENDIX A

TABLE A-I. Qualification, sample size and test routine.

Extension of qualification	Resistance Value	Quantity	Terminal type tested 1/ 2/	Test routine
Single terminal type submission over a range of resistance	Highest	24	L,P,W, X, Y and D	Group I, IA. All samples then divided equally for group III through group VI inclusive
	Lowest	24		
	Highest	6		Group II
	Highest	51		Group I, IA and group VII
	Lowest	51		
		3		Group I, IA and group VII. (any value, any terminal type)
P, W, X and Y type over a range of resistances	Highest	24	P (or Y)	Group I, IA. All samples then divided equally for group III through group VI inclusive
	Lowest	24	P (or Y)	
	Highest	6	P (or Y)	Group II
	Lowest	6	(W or X)	
	Highest	24	(W or X)	Group I, IA. All samples then divided equally for group III through group VI inclusive
	Highest	25	P (or Y)	Group I, IA and group VII
	Lowest	26	P (or Y)	
	Highest	25	(W or X)	
	Lowest	26	(W or X)	
		4		Group I, IA and group VII
L, P and Y type over a range of resistances	Highest	24	P (or Y)	Group I, IA. All samples then divided equally for group III through group VI inclusive
	Lowest	24	P (or Y)	
	Highest	6	P (or Y)	Group II
	Highest	24	L	Group I, IA. All samples then divided equally for group III through group VI inclusive
	Highest	25	L	Group I, IA and group VII
	Lowest	26	L	
	Highest	25	P (or Y)	
	Lowest	26	P (or Y)	
		3		Group I, IA and group VII. (any value, any terminal type)
L, P, W, X and Y type over a range of resistances	Highest	24	L,P,W, X, Y and D	Group I, IA. All samples then divided equally for group III through group VI inclusive
	Lowest	24	P (or Y)	
	Highest	6	P (or Y)	Group II
	Highest	6	A, B, W (or X)	
	Highest	24	L	Group I, IA. All samples then divided equally for group III through group VI inclusive
	Highest	24	A, B, W (or X)	
	Highest	17	L	Group I, IA and group VII
	Highest	17	P (or Y)	
	Highest	17	A, B, W (or X)	
	Lowest	17	L	
	Lowest	17	P (or Y)	
	Lowest	17	A, B, W (or X)	
		3		Group I, IA and group VII. (any value, any terminal type)

1/ Terminal type "X" will qualify "W" and conversely "W" will qualify "X".
2/ Terminal type "P" will qualify "Y" and conversely "Y" will qualify "P" by subjecting six sample units of any resistance value to visual and mechanical examination.

TABLE A-II. Extension of qualification between product levels.

Product level designator	Product level
C	
M	C
P	C, M
R	C, M, P
S	C, M, P, R

A.5. SOLDER DIP (RETINNING) LEADS

A.5.1 Solder dip (retinning) leads (not applicable to terminal L). The manufacturer (or his authorized category B or C distributor) may solder dip/retin the leads of product supplied to this specification provided the solder dip process (A.5.2) or an equivalent process has been approved by the qualifying activity.

A.5.2 Qualifying Activity Approval. Approval of the solder dip process will be based on one of the following options:

a. When the original lead finish qualified was hot solder dip lead finish 52 of MIL-STD-1276 (Note: The 200 microinch maximum thickness is not applicable). The manufacturer shall use the same solder dip process for retinning as is used in the original manufacture of the product.

b. When the lead originally qualified was not hot solder dip lead finish 52 of MIL-STD-1276 as prescribed in A.5.2a, approval for the process to be used for solder dip shall be based on the following test procedure:

(1) Thirty samples of any resistance value for each style and lead finish are subjected to the manufacturer's solder dip process. Following the solder dip process, the resistors are subjected to the dc resistance test (and other group A electricals). No defects are allowed.

(2) Ten of the 30 samples are then subjected to the solderability test. No defects are allowed.

(3) The remaining 20 samples are subjected to the resistance to solder heat test followed by the moisture resistance test (or hermetic seal test if the device is hermetically sealed). No defects are allowed.

(Note: Solder dip of gold plated leads is not allowed).

APPENDIX A

A.5.3 Solder dip/retinning options. The manufacturer (or authorized category B or C distributor) may solder dip/retin as follows:

a. After the 100 percent group A screening tests. Unless otherwise approved (see 4.6.3.2.2) for lot subjected to this process, electrical measurements are required in accordance with group A, subgroup 1 (Note: The manufacturer may solder dip/retin prior to the 100 percent electrical measurements of the group A, subgroup 1 tests). The Percentage Defective Allowable (PDA) for the electrical measurements shall be as for the subgroup 1 tests.

b. As a corrective action, if the lot fails the group A solderability test: For lots subjected to this process, electrical measurements are required in accordance with group A, subgroup 2 (ppm). (NOTE: Results from this test shall not be used for ppm calculation.)

c. After the group A inspection has been completed: Following the solder dip/retinning process, the electrical measurements required in group A, subgroup 1, 100 percent screening test shall be repeated on 100 percent of the lot. The PDA for the electrical measurements shall be as for the subgroup 1 tests. Following these tests, the manufacturer shall submit the lot to the group A solderability test as specified in 4.8.13.

Custodians:
Army - CR
Navy - EC
Air Force - 85
DLA - CC

Preparing activity:
DLA - CC

Review activities:
Army - AR, AT, AV, CR4, MI
Navy - AS, MC, OS
Air Force - 19, 99

(Project 5905-2014-008)

NOTE: The activities listed above were interested in this document as of the date of this document. Since organizations and responsibilities can change, you should verify the currency of the information above using the ASSIST Online database at https:/assist.dla.mil.