INCH-POUND
MIL-PRF-39022/12B
26 March 2015
SUPERSEDING
MIL-PRF-39022/12A
25 January 2008

PERFORMANCE SPECIFICATION SHEET

CAPACITOR, FIXED, METALLIZED PLASTIC FILM DIELECTRIC, ALTERNATING CURRENT (RMS), (HERMETICALLY SEALED IN METAL CASES), ESTABLISHED RELIABILITY, STYLE CHR26 (UNINSULATED)

This specification sheet is approved for use by all Departments and Agencies of the Department of Defense.

The requirements for acquiring the product described herein shall consist of this specification sheet and MIL-PRF-39022.

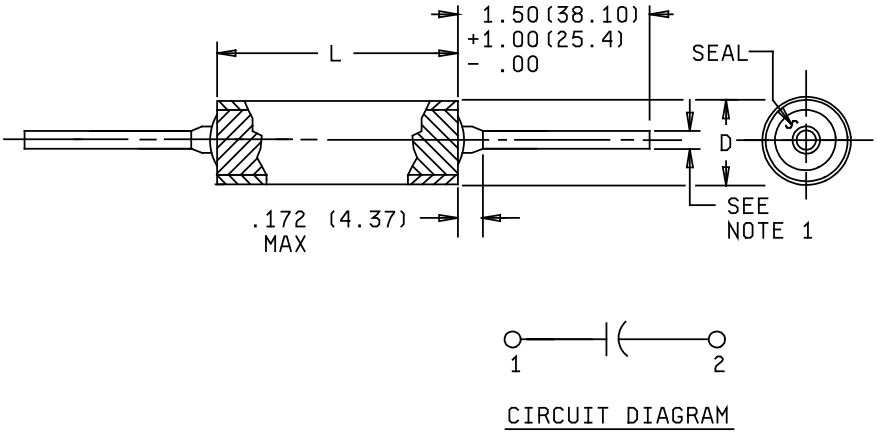

NOTES:
1. Number 20 AWG wire .032 inch ± .002 inch (0.81 mm ± 0.05 mm) for case diameter of .312 inch (7.92 mm). Number 18 AWG wire .040 inch ± .002 inch (1.02 mm ± 0.05 mm) for case diameter of .400 inch (10.16 mm) and over.
2. See table I for additional dimensions.
3. Dimensions are in inches.
4. Metric equivalents are given for general information only.
5. Metric equivalents are in parentheses.
6. Lead length may be a minimum of 1.0 inch (25.4 mm) long for use in tape and reel packaging when specified in the ordering data.

FIGURE 1. Dimensions and configuration.

REQUIREMENTS:

Dimensions and configuration: See figure 1 and table I.

Case material: Nonmagnetic (end seal may be of magnetic material).

Capacitance value: See table I.

Capacitance tolerance: ±10 percent.

Rated voltage: RMS sine wave ac at 60 Hz through 400 Hz (see table I).

Dielectric material: Normally polyphenylene sulfide.

Operating temperature range: -55°C to +85°C.

Failure rate level: M (1.0 percent), P (0.1 percent), R (0.01 percent), and S (0.001 percent).

Thermal shock: Method 107 of MIL-STD-202, condition A.

Seal:

For unimpregnated units: Method 112 of MIL-STD-202, condition A, except at +85°C +4°C, -0°C.

For impregnated units: One hour at rated temperature with no evidence of leakage.

Dielectric withstanding voltage (DWV): Method 301 of MIL-STD-202.

Terminal to terminal: 140 percent of rated ac voltage (V rms at 60 Hz) on voltages of ≤ 300 volts; 120 percent of rated ac voltage (V rms at 60 Hz) on voltages of ≥ 350 volts.

Terminals to case: 900 V rms (at 60 Hz).

Insulation resistance (IR): Method 302 of MIL-STD-202, condition A.

Terminal to terminal: See table II.

Terminal to case: 10,000 megohms, minimum.

Capacitance: Method 305 of MIL-STD-202.

Dissipation factor (DF):

At +25°C: 0.3 percent maximum.

At +85°C: 0.6 percent maximum.

Barometric pressure (reduced) for qualification only: Method 105 of MIL-STD-202.

120 percent of rated ac voltage (400 Hz) at .82 inch of mercury (80,000 feet). See MIL-PRF-39022 for voltage limitations.

Vibration, high frequency: Method 204 of MIL-STD-202, condition B (15 G).

Salt atmosphere (corrosion): Method 101 of MIL-STD-202, condition B (48 hours).

Salt solution: 5 percent.

TABLE I. Electrical characteristics, dimensions, and dash numbers.

AC rated voltage Volts (rms)	Capacitance value (μF)	Dimension, nominal 1/ (inches)		Dash number Failure rate level for (%/1,000 hr)			
		D ± .062	L + .031 - .051	M (1.0)	P (0.1)	R (0.01)	S (0.001)
400	.010	.312 (7.92)	1.125 (28.58)	1171	1191	1211	1231
400	.012	.400 (10.16)	1.125 (28.58)	1270	1290	1310	1330
400	.015	.400 (10.16)	1.125 (28.58)	1172	1192	1212	1232
400	.018	.400 (10.16)	1.125 (28.58)	1271	1291	1311	1331
400	.022	.400 (10.16)	1.125 (28.58)	1173	1193	1213	1233
400	.027	.400 (10.16)	1.375 (34.93)	1272	1292	1312	1332
400	.033	.400 (10.16)	1.375 (34.93)	1174	1194	1214	1234
400	.039	.562 (14.27)	1.125 (28.58)	1273	1293	1313	1333
400	.047	.562 (14.27)	1.125 (28.58)	1175	1195	1215	1235
400	.056	.562 (14.27)	1.375 (34.93)	1274	1294	1314	1334
400	.068	.562 (14.27)	1.375 (34.93)	1176	1196	1216	1236
400	.082	.562 (14.27)	1.625 (41.28)	1275	1295	1315	1336
400	.10	.562 (14.27)	1.625 (41.28)	1177	1197	1217	1237
390	.12	.670 (17.02)	1.625 (41.28)	1178	1198	1218	1238
390	.15	.670 (17.02)	1.625 (41.28)	1179	1199	1219	1239
385	.18	.670 (17.02)	1.875 (47.63)	1276	1296	1316	1336
385	.22	.670 (17.02)	1.875 (47.63)	1180	1200	1220	1240
380	.27	.750 (19.05)	2.375 (60.33)	1277	1297	1317	1337
380	.33	.750 (19.05)	2.375 (60.33)	1183	1203	1223	1243
370	.39	1.000 (25.40)	1.875 (47.63)	1278	1298	1318	1338
370	.47	1.000 (25.40)	1.875 (47.63)	1181	1201	1221	1241
350	.56	1.000 (25.40)	2.375 (60.33)	1279	1299	1319	1339
350	.68	1.000 (25.40)	2.375 (60.33)	1182	1202	1222	1242
300	.10	.500 (12.70)	1.125 (28.58)	1044	1074	1104	1134
300	.12	.562 (14.27)	1.375 (34.93)	1340	1360	1380	1400
300	.15	.562 (14.27)	1.375 (34.93)	1045	1075	1105	1135
300	.18	.562 (14.27)	1.625 (41.28)	1341	1361	1381	1401
300	.22	.562 (14.27)	1.625 (41.28)	1046	1076	1106	1136
300	.27	.562 (14.27)	1.875 (47.63)	1342	1362	1382	1402
300	.33	.562 (14.27)	1.875 (47.63)	1047	1077	1107	1137
300	.39	.670 (17.02)	1.625 (41.28)	1343	1363	1383	1403
300	.47	.670 (17.02)	1.625 (41.28)	1048	1078	1108	1138
295	.56	.750 (19.05)	1.875 (47.63)	1344	1364	1384	1404
290	.68	.750 (19.05)	1.875 (47.63)	1049	1079	1109	1139
280	.82	.750 (19.05)	2.125 (53.98)	1345	1365	1385	1405
270	1.00	.750 (19.05)	2.125 (53.98)	1050	1080	1110	1140
235	1.50	1.000 (25.40)	1.875 (47.63)	1051	1081	1111	1141
200	2.20	1.000 (25.40)	2.625 (66.68)	1052	1082	1112	1142
165	.10	.312 (7.92)	.875 (22.23)	1031	1061	1091	1121
165	.12	.312 (7.92)	1.125 (28.58)	1346	1366	1386	1406
165	.15	.312 (7.92)	1.125 (28.58)	1032	1062	1092	1122
165	.18	.400 (10.16)	.875 (22.23)	1347	1367	1387	1407
165	.22	.400 (10.16)	.875 (22.23)	1033	1063	1093	1123
165	.27	.400 (10.16)	1.125 (28.58)	1348	1368	1388	1408
165	.33	.400 (10.16)	1.125 (28.58)	1034	1064	1094	1124
165	.39	.400 (10.16)	1.375 (34.93)	1349	1369	1389	1409
165	.47	.400 (10.16)	1.375 (34.93)	1035	1065	1095	1125
165	.56	.562 (14.27)	1.125 (28.58)	1350	1370	1390	1410
165	.68	.562 (14.27)	1.125 (28.58)	1036	1066	1096	1126

See footnote at end of table.

TABLE I. Electrical characteristics, dimensions, and dash numbers - Continued.

AC rated voltage Volts (rms)	Capacitance value (μF)	Dimension, nominal 1/ (inches)		Dash number Failure rate level for (%/1,000 hr)			
		D ± .062	L + .031 - .051	M (1.0)	P (0.1)	R (0.01)	S (0.001)
165	.82	.562 (14.27)	1.375 (34.93)	1351	1371	1391	1411
165	1.00	.562 (14.27)	1.375 (34.93)	1037	1067	1097	1127
155	1.50	.562 (14.27)	1.625 (41.28)	1038	1068	1098	1128
150	2.20	.670 (17.02)	1.625 (41.28)	1039	1069	1099	1129
145	2.50	.670 (17.02)	1.875 (47.63)	1352	1372	1392	1412
140	3.30	.750 (19.05)	1.875 (47.63)	1040	1070	1100	1130
135	4.00	.750 (19.05)	2.125 (53.98)	1353	1373	1393	1413
130	4.70	.750 (19.05)	2.375 (60.33)	1041	1071	1101	1131
110	6.80	1.000 (25.40)	1.875 (47.63)	1042	1072	1102	1132
100	8.00	1.000 (25.40)	2.125 (53.98)	1354	1374	1394	1414
90	9.00	1.000 (25.40)	2.375 (60.33)	1355	1375	1395	1415
80	10.00	1.000 (25.40)	2.625 (66.68)	1043	1073	1103	1133

1/ Metric equivalents are in parentheses.

TABLE II. Insulation resistance.

In megohms:	
At +25°C ± 3°C (need not exceed) - - - - - - -	50,000
At +85°C +4°C, -0°C (need not exceed) - - -	10,000
In megohms x microfarads (minimum):	
At +25°C ± 3°C -	25,000
At +85°C +4°C, -0°C - - - - - - - - - - - - - - - -	5,000

Immersion: Method 104 of MIL-STD-202, condition C.

DWV:

Terminal to terminal: 140 percent of rated voltage on voltages of ≤ 300 volts; 120 percent of rated voltage on voltages of ≥ 350 volts.

Terminals to case: 900 V rms (60 Hz).

IR:

Terminal to terminal: Not less than 33.3 percent of value specified in table II.

Terminals to case: 5,000 megohms, minimum.

Capacitance: Within ± 10 percent of initial value.

DF: Not to exceed 110 percent of initial limit.

Solderability: Method 208 of MIL-STD-202.

Shock (specified pulse): Method 213 of MIL-STD-202, condition I. DC voltage equivalent to rms rating shall be applied.

Resistance to soldering heat: Method 210 of MIL-STD-202, condition C, except the time shall be 10 seconds ± 1 second.

IR: See table II.

Capacitance: Within ± 5 percent of initial value.

DF: Not more than 1.0 percent.

Moisture resistance: Method 106 of MIL-STD-202.

DWV, IR, Capacitance, and DF: Same as for immersion.

Terminal strength: Method 211 of MIL-STD-202, conditions A and D.

Condition A: Applied force 5 pounds.

Condition D: 3 rotations of 360 degrees.

Low temperature and capacitance change with temperature:

Low temperature: -55°C +0°C, -3°C for 48 hours ± 4 hours with rated voltage applied.

Capacitance change with temperature:

At -55°C +0°C, -3°C: ±3 percent, maximum.

At +85°C +4°C, -0°C: ±3 percent maximum.

Fungus: Method 508 of MIL-STD-810.

Life: Method 108 of MIL-STD-202.

Qualification:

Accelerated conditions: 140 percent of rated ac voltage (400 Hz) for 2,000 +72, -0 hours on voltages of ≤ 300 volts; 120 percent of rated ac voltage (400 Hz) for 2,000 +72, -0 hours on voltages of ≥ 350 volts.

Rated conditions: 100 percent of rated voltage for 10,000 +96, -0 hours.

DF (at +85°C +4°C, -0°C) between 24 and 48 hours of test: Not greater than initial limit.

During last 48 hours of test: Not greater than 0.75 percent.

IR:

Terminal to terminal: Not less than 1,000 megohm/microfarads. Need not exceed 5,000 megohms.

Terminals to case: 5,000 megohms, minimum.

Capacitance: Within ± 10 percent of initial value.

DF (at +25°C ± 3°C after life): Not greater than 0.75 percent.

Quality conformance: 240 hours at accelerated conditions and meet the requirements for qualification test.

Extended life:

Accelerated conditions: 1,760 +72, -0 hours.

Marking: In accordance with MIL-PRF-39022.

Part or Identifying Number (PIN): M39022/12- (dash number from table I).

Changes from previous issue: The margins of this specification are marked with vertical lines to indicate where changes from the previous issue were made. This was done as a convenience only and the Government assumes no liability whatsoever for any inaccuracies in these notations. Bidders and contractors are cautioned to evaluate the requirements of this document based on the entire content irrespective of the marginal notations and relationship to the last previous issue.

Referenced documents: In addition to MIL-PRF-39022, this document also references MIL-STD-202 and MIL-STD-810.

Custodians:
Army - CR
Navy - EC
Air Force - 85
DLA - CC

Preparing activity:
DLA - CC

(Project 5910-2015-011)

Review activities:
Army - AR
Navy - AS, MC, OS, SH
Air Force - 19

NOTE: The activities listed above were interested in this document as of the date of this document. Since organizations and responsibilities can change, you should verify the currency of the information above using the ASSIST Online database at https://assist.dla.mil.