INCH-POUND
MIL-PRF-39019F
14 May 2010
SUPERSEDING
MIL-PRF-39019E
08 February 2008

PERFORMANCE SPECIFICATION

CIRCUIT BREAKERS, MAGNETIC, LOW-POWER SEALED, TRIP-FREE GENERAL SPECIFICATION FOR

This specification is approved for use by all Departments and Agencies of the Department of Defense.

1. SCOPE

1.1 Scope. This specification covers the requirements and test procedures for single and multipole, trip-free, sealed, low-power, magnetic circuit breakers with current ratings of 0.050 amperes to 20.0 amperes inclusive, up to and including 240 volts, 60 hertz (Hz) and 400 Hz alternating current (ac), and 50 volts direct current (dc) (see 6.1 and 6.7). These circuit breakers may also include auxiliary contacts (see 6.6.1) and terminals for monitoring circuits. Designers are CAUTIONED that these circuit breakers may contain a pure tin finish on some of the component parts (see 6.5).

1.2 Part or Identifying Number (PIN). The PIN will consist of the letter “M”, the basic number of the specification sheet, and an assigned dash number (see 3.1), as shown in the following example:

M	39019/XX	-XXX
Designator	Specification sheet number	Dash number (see 3.1 for details)

2. APPLICABLE DOCUMENTS

2.1 General. The documents listed in this section are specified in sections 3, 4 or 5 of this specification. This section does not include documents cited in other sections of this specification or recommended for additional information or as examples. While every effort has been made to ensure the completeness of this list, document users are cautioned that they must meet all specified requirements of documents cited in sections 3, 4 or 5 of this specification, whether or not they are listed.

2.2 Government documents.

2.2.1 Specifications, standards, and handbooks. The following specifications, standards, and handbooks form a part of this document to the extent specified herein. Unless otherwise specified, the issues of these documents are those cited in the solicitation or contract (see 6.2).

FEDERAL SPECIFICATIONS

TT-I-735 - Isopropyl Alcohol.

FEDERAL STANDARDS

FED-STD-H28 - Screw-Thread Standards for Federal Services.

Comments, suggestions, or questions on this document should be addressed to: US Army Communications-Electronics RDEC, ATTN: RDER-PRT, Fort Monmouth, NJ 07703-5023 or emailed to Robert.Francis@us.army.mil. Since contact information can change, you may want to verify the currency of this address information using the ASSIST Online database at https://assist.daps.dla.mil.

DEPARTMENT OF DEFENSE SPECIFICATIONS

(See supplement 1 for list of specification sheets.)

DEPARTMENT OF DEFENSE STANDARDS

MIL-STD-202	-	Test Methods for Electronic and Electrical Component Parts
MIL-STD-1285	-	Marking of Electrical and Electronic Parts.

(Copies of these documents are available online at https://assist.daps.dla.mil/quicksearch/ or https://assist.daps.dla.mil/ or from the Standardization Document Order Desk, 700 Robbins Avenue, Building 4D, Philadelphia, PA 19111-5094).

2.3 Non-Government publications. The following documents form a part of this document to the extent specified herein. Unless otherwise specified, the issues of these documents are those cited in the solicitation or contract (see 6.2).

AMERICAN NATIONAL STANDARDS INSTITUTE (ANSI)

NCSL-Z540.3	-	Calibration Laboratories and Measuring and Test Equipment - General Requirements.

INTERNATIONAL ORGANIZATION FOR STANDARDS (ISO)

ISO 10012	-	Measurement management systems - Requirements for measurement processes and measuring equipment.

(A Copy of this document is available from http://www.ansi.org/ or the American National Standards Institute (ANSI), 11 West 42nd Street, New York, NY 10036-8002).

INSTITUTE OF ELECTRICAL AND ELECTRONIC ENGINEERS, INC. (IEEE)

IEEE STD 315-1975	-	Graphic Symbols for Electrical and Electronic Diagrams.

(A Copy of this document is available from http://www.ieee.org or from the Institute of Electrical and Electronic Engineers (IEEE), IEEE Operations Center, 445 Hoes Lane, P. O. Box 1331, Piscataway, NJ 08855-1331, Phone: +1 732 981 0060, Fax: +1 732 981 1721.)

2.4 Order of precedence. Unless otherwise noted herein or in the contract, in the event of a conflict between the text of this document and the references cited herein (except for related specification sheets) the text of this document takes precedence. Nothing in this document, however, supersedes applicable laws and regulations unless a specific exemption has been obtained.

3. REQUIREMENTS

3.1 Specification sheets. The individual item requirements shall be as specified herein and in accordance with the applicable specification sheet. In the event of any conflict between the requirements of this specification and the specification sheet, the latter shall govern.

3.2 Qualification. Circuit breakers furnished under this specification shall be products that are authorized by the qualifying activity for listing on the applicable qualified products list before contract award (see 4.5 and 6.3).

3.3 Material. Material shall be used which will enable the circuit breakers to conform to the performance requirements of this specification. Acceptance or approval of any constituent material shall not be construed as a guaranty of the acceptance of the finished product.

3.3.1 Metals. Metals shall be of a corrosion-resistant type or shall be suitably plated or treated to resist corrosion (see 3.21). Cadmium and zinc plating shall not be used.

3.3.1.1 Dissimilar metals. When dissimilar metals are used in intimate contact with each other, protection against electrolysis and corrosion shall be provided. The use of dissimilar metals in contact, which tend toward active electrolytic corrosion (particularly brass, copper, or steel used in contact with aluminum or aluminum alloy), is not acceptable. However, metal plating or metal spraying of dissimilar base metals to provide similar or suitable abutting surfaces is permitted. The use of dissimilar metals separated by a suitable insulating material is also permitted. Dissimilar metals are defined in 6.4.

3.3.2 Fungus resistance. Materials used shall be non-nutrient to fungus growth.

3.3.3 Solder and soldering flux. The solder and solder flux shall be of such a quality as to enable the circuit breaker to meet the performance requirements of this specification.

3.4 Interface and physical dimensions. Circuit breakers shall be of the interface and physical dimensions specified (see 3.1).

3.4.1 Trip-free feature. Circuit breakers shall be so designed that the circuit cannot be maintained closed by physically holding the lever in the closed position when any pole is carrying overload currents which would normally automatically trip the breaker to the open position.

3.4.2 Trip indication. Circuit breakers shall be so designed that when the circuit breaker contacts open automatically on overload, the actuating lever shall indicate the operation by moving to the "off" ("trip") position.

3.4.3 Attitude. Circuit breakers shall be constructed to trip within maximum and minimum limits of the specified trip times (see 3.9 and 3.13) when mounted on a vertical panel (normal mounting means) (see 4.8.6).

3.4.4 Actuating lever. The exposed portion of the actuating lever shall have a smooth, nonglare, metallic finish and shall be insulated from all current-carrying parts. Multipole circuit breakers (see 6.6.3) shall be configured so that it will be impossible by any manipulation of the actuating lever to close less than the total number of contacts. The actuating lever shall point in the direction of the mounting bushing keyway when the circuit breaker is in the "closed " ("on") position. The actuator shall not work to an intermediate position, give a false trip indication, or be removable from the circuit breaker.

3.4.5 Panel seal. The panel seal shall effectively seal the circuit breaker to the mounting panel.

3.4.6 Mounting hardware. Mounting hardware shall be as specified (see 3.1). Circuit breakers shall be furnished with a nonturn device. Each circuit breaker shall be furnished with a tab or plate which fits over the mounting bushing and into the keyway slot. The tab or plate shall be marked with “on” on the side where the keyway slot is located and “off” on the side opposite the keyway slot. For direct Government procurement, the hardware shall be assembled in proper order as specified (see 3.1).

3.4.7 Threaded parts. Screw threads on removable threaded parts shall be in accordance with FED-STD-H28. Threading of nonmetallic parts shall not be permitted.

3.4.8 Terminals.

3.4.8.1 Line and load terminals. The main line and load terminals shall be mounted as specified (see 3.1). Load terminals will be on the side of the keyway and line terminals will be on the side opposite of the keyway. Each terminal shall be capable of carrying rated current and voltage per pole of the circuit breaker. The terminals shall be hook style for configuration 1 and screw terminals for configuration 2.

3.4.8.2 Auxiliary contact terminals. When specified (see 3.1), circuit breakers shall be provided with auxiliary contacts (see 6.6.1) of the single-pole, double-throw type and three auxiliary contact terminals, which, unless otherwise specified (see 3.1), shall be capable of carrying 0.5 ampere tungsten lamp load at 50 volts dc or 120 volts ac. There shall be one common terminal (designated by symbol "C"), one terminal to indicate auxiliary contacts which are normally open (designated by symbol "NO") when the main circuit breaker contacts are open, and one terminal to indicate auxiliary contacts which are normally closed (designated by symbol "NC") when the main circuit breaker contacts are open, regardless of lever position. Terminal location, style, and design shall be as specified (see 3.1).

3.4.8.3 Solderability of hook terminals. Hook terminals shall be treated to facilitate soldering. Coating such as hot solder dip is acceptable.

3.4.9 Reset mechanism. The reset mechanism shall be so designed that retaining the actuator in the closed position after automatic tripping occurs shall not adversely affect subsequent performance of the circuit breaker.

3.4.10 Tamper-proof calibration. Circuit breakers shall be so sealed that tampering with the calibration is not possible without dismantling the device or breaking the seal.

3.4.11 Soldering. When soldering is employed, only noncorrosive fluxes shall be used. Solder shall not be used primarily for obtaining mechanical strength. Electrical connections shall be mechanically secure before, and electrically continuous after, soldering.

3.4.12 Welding and brazing. When welding or brazing is employed, the electrical connections shall be mechanically secure and electrically continuous after welding or brazing. When brazing is employed, only noncorrosive fluxes shall be used.

3.4.13 Voltage and frequency rating. Circuit breakers shall be designed to have identical load ratings at all voltages up to and including 50 V dc and 240 V ac, 60 Hz and 400 Hz (see 3.1 and 6.7).

3.4.14 Continuous current carrying capacity. Circuit breakers shall be capable of continuously carrying the rated current as specified (see 3.1).

3.4.15 Circuit diagram. The circuit diagram shall be as specified (see 3.1).

3.5 Solderability. When circuit breakers are tested as specified in 4.8.2, 95 percent of the total length of fillet, which is between the standard wrap wire and the terminal, shall be tangent to the surface of the terminal being tested. There shall be no pinholes, voids, etc. A ragged or interrupted line at the point of tangency between the fillet and the terminal under test shall be considered a defect. After the test there shall be no evidence of fracture, loosening of parts, or any other mechanical failure of the circuit breakers.

3.6 Dielectric withstanding voltage. When circuit breakers are tested as specified in 4.8.3, the leakage current shall not exceed 0.5 milliampere and there shall be no evidence of flashover, mechanical damage, arcing, or breakdown.

3.7 Insulation resistance. When circuit breakers are tested as specified in 4.8.4, the insulation resistance shall not be less than 100 megohms.

3.8 Resistance or impedance. Circuit breakers shall be tested as follows:

a. Main contacts: When circuit breakers are tested as specified in 4.8.5a, the resistance or impedance of the main contacts shall not exceed the maximum values specified (see 3.1).

b. Auxiliary contacts: When circuit breakers are tested as specified in 4.8.5b, the initial contact resistance shall not exceed 0.1 ohm.

3.9 Calibration. When circuit breakers are tested as specified in 4.8.6, the tripping times (see 6.6.6) shall not exceed the limits shown in table I for the applicable time delay specified (see 3.1 and 6.6.5). In multipole circuit breakers, all poles shall trip upon application of overload on any pole or combination of poles. When tested for high inrush, circuit breakers shall not trip.

3.10 Actuating lever (see 4.8.7).

3.10.1 Lever strength. When circuit breakers are tested as specified in 4.8.7.1, there shall be no evidence of mechanical damage.

3.10.2 Lever operating force. When circuit breakers are tested as specified in 4.8.7.2, the applied force necessary to operate the lever in either direction shall not exceed the following:

One-pole breaker - 4 pounds.
Two-pole breaker - 7 pounds.
Three-pole breaker - 10 pounds.

3.11 Seal. When circuit breakers are tested as specified in 4.8.8, there shall be no visible air bubbles indicative of leakage.

3.12 Panel seal. When circuit breakers are tested as specified in 4.8.9, there shall be no visible air bubbles indicative of leakage.

TABLE I. Calibration tripping times (seconds) at 25°C ±2°C.

Percent of rated current	Time delay A (fast)		Time delay B (slow)		Time delay C (nondelay)	
	Min	Max	Min	Max	Min	Max
100	No trip 1 hour	No trip 1 hour	No trip 1 hour	No trip 1 hour	No trip 1 hour	No trip 1 hour
135	0.2	7.0	3.0	60.0	N/A	0.1
200	0.055	0.95	0.5	9.0	N/A	0.05
400	Inst 1/	0.24	Inst	1.75	N/A	N/A
600	Inst	0.13	Inst	0.6	N/A	N/A
800	Inst	0.06	Inst	0.1 2/	N/A	N/A
800 at 60 Hz and dc 3/	No trip	No trip	No trip	No trip	N/A	N/A
1400 at 400 Hz 3/	No trip	No trip	No trip	No trip	N/A	N/A

1/ Instantaneous (Inst) is defined as less than 0.015 second.
2/ This time is extended to 0.3 second for dc and 400 Hz when the high inrush design is incorporated.
3/ This test applicable only to breakers with high inrush design. See 3.9 and 4.8.6 for requirements.

3.13 High temperature and low temperature operation. When circuit breakers are tested as specified in 4.8.10, there shall be no evidence of mechanical damage and tripping time shall not exceed the limits shown in table II for the applicable time delay specified (see 3.1). Circuit breakers shall also meet the following requirements when tested under the conditions specified in 4.8.10.

a. Dielectric withstanding voltage (see 3.6).

b. Insulation resistance (see 3.7).

c. Seal (see 3.11).

d. Panel seal (see 3.12).

TABLE II. High-temperature and low-temperature tripping times (seconds).

Percent of rated current	Time delay A (fast)		Time delay B (slow)		Time delay C (nondelay)	
	-40°C ±2°C	+100°C ±2°C	-40°C ±2°C	+100°C ±2°C	-40°C ±2°C	+100°C ±2°C
	Max	Min	Max	Min	Max	Min
100	No trip 1 hour	No trip 1 hour	No trip 1 hour	No trip 1 hour	No trip 1 hour	No trip 1 hour
135	400.0	0.10	500.0	0.4	50.0	N/A
150 1/	800.0	N/A	1,000.0	N/A	25.0	N/A
200	5.0	0.015	25.0	0.04	5.0	N/A
400	0.7	Inst 2/	10.0	Inst	N/A	N/A
600	0.5	Inst	2.0	Inst	N/A	N/A
800	0.06	Inst	0.1 3/	Inst	N/A	N/A
800 at 60 Hz and dc 4/	No trip	No trip	No trip	No trip	N/A	N/A
1400 at 400 Hz 4/	No trip	No trip	No trip	No trip	N/A	N/A

1/ This test performed at -55°C ±2°C.
2/ Instantaneous (Inst) is defined as less than 0.015 second.
3/ This time is extended to 0.3 second for dc and 400 Hz when the high inrush design is incorporated.
4/ This test applicable only to breakers with high inrush design.

3.14 Endurance. When circuit breakers are tested as specified in 4.8.11, no contact shall fail to open or close its individual circuit in proper sequence and there shall be no evidence of mechanical damage or loosening of parts. Circuit breakers shall also meet the following requirements.

a. Dielectric withstanding voltage (see 3.6).

b. Insulation resistance (see 3.7).

c. Calibration (see 3.9).

d. Seal (see 3.11).

e. Auxiliary contact resistance (see 4.8.5b): Contact resistance shall not exceed 0.4 ohm.

3.15 Terminal strength. When circuit breakers are tested as specified in 4.8.12, there shall be no short circuiting, breakage, loosening, or rotation of terminals, and no damage to the circuit breaker body or seal.

3.16 Vibration, high frequency. When circuit breakers are tested as specified in 4.8.13, main circuit breaker contacts shall not trip. There shall be no closing of open main or auxiliary contacts, nor opening of closed main or auxiliary contacts in excess of 10 microseconds duration, nor shall there be any evidence of mechanical or electrical damage.

3.17 Moisture resistance. When circuit breakers are tested as specified in 4.8.14, the change in resistance or impedance between the initial and final recorded measurements shall not exceed 10 percent for circuit breaker current ratings of less than 5.0 amperes, and 25 percent for current ratings of 5.0 amperes and greater (see 3.1). The insulation resistance shall be a minimum of 1 megohm (wet) at the end of the tenth cycle and a minimum of 100 megohms at the end of the 24 hour drying period, and there shall be no evidence of mechanical damage. Circuit breakers shall also meet the following requirements.

a. Dielectric withstanding voltage (see 3.6).

b. Calibration (see 3.9).

c. Seal (see 3.11).

d. Panel seal (see 3.12).

3.18 Thermal shock. When circuit breakers are tested as specified in 4.8.15, there shall be no evidence of mechanical damage.

3.19 Shock (specified pulse). When circuit breakers are tested as specified in 4.8.16, main circuit breaker contacts shall not trip. There shall be no closing of open main or auxiliary contacts, nor opening of closed main or auxiliary contacts in excess of 10 microseconds duration, nor shall there be any evidence of mechanical or electrical damage.

3.20 Trip-free calibration. When circuit breakers are tested as specified in 4.8.17, tripping times shall be as specified in 3.9. After the circuit breaker has tripped, the contacts shall not automatically return to the closed position even momentarily. Subsequent performance of the circuit breaker shall not be adversely affected. The auxiliary contacts shall indicate the main contact condition even when the lever is held in the closed position.

3.21 Salt atmosphere (corrosion). When circuit breakers are tested as specified in 4.8.18, there shall be no evidence of excessive corrosion (see 3.3.1). Excessive corrosion is defined as that which interferes with the electrical or mechanical performance, or, in the case of plated metals, corrosion which has passed through the plating and attacked the base metal. There shall be no warping, cracking, or other damage to the circuit breaker. After the test, the mounting hardware shall be readily removable. Circuit breakers shall also meet the following requirements.

a. Dielectric withstanding voltage (see 3.6).

b. Calibration (see 3.9).

c. Seal (see 3.11).

d. Panel seal (see 3.12).

3.22 Barometric pressure (reduced). When circuit breakers are tested as specified in 4.8.19, the leakage current shall not exceed 0.1 milliampere and there shall be no evidence of flashover, mechanical damage, arcing, or breakdown.

3.23 Temperature rise. When circuit breakers are tested as specified in 4.8.20, they shall not trip. The temperature rise of the terminals shall not exceed 25°C for 10.0 ampere breakers and below and 35°C for breakers over 10.0 amperes.

3.24 Interrupting capacity. When tested as specified in 4.8.21, circuit breakers shall trip automatically and the indicating fuse shall not open. There shall be no dielectric breakdown, and when applicable (see 3.1 and 3.4.8.2), the auxiliary contacts shall operate, indicating position of the main contacts. Circuit breakers shall also meet the following requirements.

a. Dielectric withstanding voltage (see 3.6)

b. Calibration at 200 percent of rated current (see 3.9).

c. Insulation resistance (see 3.7).

d. Seal (see 3.11).

3.25 Marking (see 3.1).

3.25.1 Identification marking. The following information shall be marked on the circuit breaker in accordance with MIL-STD-1285, as a minimum:

a. Part number (see 3.1).

b. Current rating, voltage, and operating frequency (see 3.1).

c. Supplier's name or code symbol and date code.

d. Circuit diagram using symbols in accordance with IEEE STD 315-1975.

e. Terminals shall be permanently identified in accordance with figure 1. Terminals not used need not be identified.

3.25.2 Other marking. The main "LINE" terminal (see 6.6.2) and, where applicable, the auxiliary contact terminals (see 3.4.8.2) shall be clearly and permanently marked on each unit.

3.25.3 Resistance to solvents. When circuit breakers are tested as specified in 4.8.1.1, the marking shall remain legible and there shall be no blistering or peeling in the marking area.

3.26 Recycled, recovered, or environmentally preferable materials. Recycled, recovered, or environmentally preferable materials should be used to the maximum extent possible, provided that the material meets or exceeds the operational and maintenance requirements, and promotes economically advantageous life cycle costs.

3.27 Workmanship. Circuit breakers shall be processed in such a manner as to be free from cracked or displaced parts, sharp edges, burrs, and other defects which will affect life, serviceability, or appearance.

4. VERIFICATION

4.1 Classification of inspection. The inspection requirements specified herein are classified as follows:

a. Qualification inspection (see 4.4).

b. Verification of qualification (see 4.5)

c. Conformance inspection (see 4.6).

d. Periodic group B inspection (see 4.7).

4.2 Test equipment and inspection facilities. The manufacturer shall establish and maintain a calibration system in accordance with NCSL-Z540.3, ISO 10012, or equivalent system as approved by the qualifying activity.

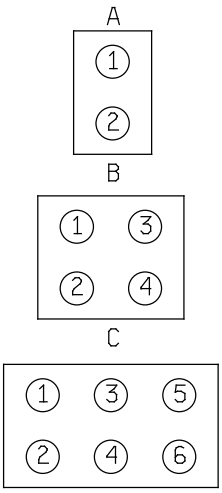

NOTE: All views are rear face of circuit breaker with keyway up.

FIGURE 1. Terminal symbols and identification numbers.

4.3 Inspection conditions. Unless otherwise specified herein, all inspections shall be performed in accordance with the test conditions specified in the "GENERAL REQUIREMENTS" of MIL-STD-202.

4.3.1 Power supply. Unless otherwise specified herein, the power supply shall have no more than 10 percent regulation at twice the specified load current. A dc power supply shall have no more than 5 percent voltage ripple. An ac power supply shall be within 1 percent of the specified frequency and shall be sinusoidal with a form factor between 0.95 and 1.25.

4.4 Qualification inspection. Qualification inspection shall be performed at a laboratory acceptable to the Government (see 6.3) on sample units produced with equipment and procedures normally used in production.

4.4.1 Sample size. The number of circuit breakers to be subjected to qualification inspection shall be as specified in the appendix to this specification.

4.4.2 Inspection routine. Sample units, grouped as specified in the appendix, shall be subjected to the qualification inspection specified in table III, in the order shown. All 36 sample units shall be subjected to the inspection of group I. Then the 36 sample units shall be allocated as follows into six 6-unit groups, as specified in the appendix, and subjected to the inspection for their particular group.

Group II:	One 6-unit group covering the highest current rating.
Group III, IV, and V:	One 6-unit group each; each 6-unit group uniformly composed of circuit breakers at either the highest or lowest current rating at the option of the supplier.
Group VI	One 6-unit group covering the highest current rating and one 6-unit group covering the lowest current rating.

4.4.2.1 Time delay C. Six sample units (three each at the highest and lowest current rating) shall be subjected to the inspection specified in table III.

4.4.3 Failures. One or more failures shall be cause for refusal to grant qualification approval.

4.5 Verification of qualification. To retain qualification, the contractor shall provide verification to the qualifying activity for the following items every 12 months:

a. Design of the circuit breaker has not changed.

b. Verification that the conformance inspections have been performed on inspection lots supplied to the requirements of this specification.

c. Verification that the periodic inspections have been performed as applicable. The inspections shall consist of the examinations and tests specified in table IV in the order shown. If test results indicate nonconformance with specification requirements, and corrective action acceptable to the qualifying activity has not been taken, action may be taken to remove the failing product from the QPL.

In the event that no production has occurred in this period, the contractor shall still verify to the qualifying activity that the capacity to manufacture and test QPL circuit breakers still exists and that the contractor wants to remain on the QPL.

4.5.1 Failures. If one or more sample units fail to pass verification of qualification inspection, the sample shall be considered to have failed.

4.5.2 Disposition of sample units. Sample units which have been subjected to the inspections in table IV shall not be delivered on the contract or order.

TABLE III. Qualification inspection.

Inspection	Requirement paragraph	Method paragraph
Group I (all sample units) 1/		
Visual and mechanical examination 2/	3.1, 3.3 to 3.4.15 inclusive, 3.25 and 3.27.	4.8.1
Solderability (3 sample units only)	3.5	4.8.2
Dielectric withstanding voltage	3.6	4.8.3
Insulation resistance	3.7	4.8.4
Resistance or impedance	3.8	4.8.5
Calibration	3.9	4.8.6.1
Lever strength	3.10.1	4.8.7.1
Lever operating force	3.10.2	4.8.7.2
Seal	3.11	4.8.8.1
Panel seal	3.12	4.8.9
Resistance to solvents (4 sample units only)	3.25.3	4.8.1.1
Group II (6 sample units)		
High-temperature and low-temperature operation	3.13	4.8.10
Endurance	3.14	4.8.11
Group III (6 sample units)		
Terminal strength	3.15	4.8.12
Vibration, high frequency	3.16	4.8.13
Moisture resistance	3.17	4.8.14
Group IV (6 sample units)		
Thermal shock	3.18	4.8.15
Shock (specified pulse)	3.19	4.8.16
Moisture resistance	3.17	4.8.14
Group V (6 sample units) 3/		
Trip-free calibration	3.20	4.8.17
Salt atmosphere (corrosion)	3.21	4.8.18
Barometric pressure (reduced)	3.22	4.8.19
Group VI (12 sample units)		
Temperature rise	3.23	4.8.20
Interrupting capacity	3.24	4.8.21

1/ Nondestructive examinations and tests.
2/ Dimensional measurements will be made on two units only.
3/ After completion of group V tests, one circuit breaker of the group shall be opened and examined internally in accordance with 4.8.1.

TABLE IV. Verification of qualification inspection.

Inspection 1/, 3/	Part number	Requirement paragraph	Test method paragraph	Number of samples
1st quarter Dimensions, lever strength, operating force, and shock	M39019/02-200 M39019/02-257 M39019/04-301 M39019/04-339 M39019/06-202 M39019/06-259	3.1, 3.4, 3.10.1, 3.10.2, 3.19	4.8.1, 4.8.7.1, 4.8.7.2, 4.8.16	1 1 1 1 1 1
2nd quarter Dimensions, solderability, and vibration	M39019/02-301 M39019/02-339 M39019/04-200 M39019/04-257 M39019/06-202 M39019/06-259	3.1, 3.4, 3.5, 3.16	4.8.1, 4.8.2, 4.8.13	1 1 1 1 1 1
3rd quarter Dimensions, trip-free calibration, and salt atmosphere	M39019/02-202 M39019/02-259 M39019/04-202 M39019/04-259 M39019/06-300 M39019/06-338	3.1, 3.4, 3.20, 3.21	4.8.1, 4.8.17, 4.8.18	1 1 1 1 1 1
4th quarter 2/	M39019/02-200 M39019/02-257 M39019/04-301 M39019/04-339 M39019/06-202 M39019/06-259	3.1, 3.4, 3.13, 3.14, 3.17, 3.23, 3.24	4.8.1, 4.8.10, 4.8.11, 4.8.14, 4.8.20, 4.8.21	1 1 1 1 1 1

1/ Dimensions taken shall be variables data. Dimensional verification may be waived with approval from the qualifying activity if the contractor can demonstrate that these tests have been performed for three consecutive periods with zero failures.

2/ High-low temperature operation, endurance and dimensions shall be performed the 4th quarter of the first year, moisture resistance and dimensions shall be performed the 4th quarter of the second year, and temperature rise, interrupting capacity and dimensions shall be performed the 4th quarter of the 3rd year. After the third year, the sequence repeats.

3/ If the contractor can demonstrate that these tests have been performed for three consecutive periods with zero failures, the frequency of these tests may be reduced after approval by the qualifying activity. (i.e.; each quarterly test would become an annual test taking 6 years to complete a total cycle). If the design, material, construction, or processing of the circuit breakers change, or if there are any quality problems or failures, the qualifying activity may require resumption of the original test frequency.

4.6 Conformance inspection.

4.6.1 Inspection of product for delivery. Inspection of product for delivery shall consist of group A inspection.

4.6.1.1 Inspection lot. An inspection lot shall consist of all the circuit breakers covered by a single specification sheet produced under essentially the same conditions, and offered for inspection at one time. In addition, circuit breakers, similar in design and number of poles except for the presence of auxiliary contact terminals, may be combined to form a lot, provided that a proportional quantity of a sample units with and without auxiliary contact terminals are incorporated into the sample.

4.6.1.1.1 Group A inspection. Group A inspection shall consist of the examinations and tests specified in table V.

4.6.1.1.1.1 Sampling plan. Group A inspection shall be on an inspection lot basis. Samples shall be selected in accordance with table VI, based on the inspection lot. If there are one or more failures, the inspection lot shall be considered to have failed.

4.6.1.1.2 Rejected lots. If an inspection lot is rejected, the supplier may rework the lot to correct the defects or 100 percent inspect the lot and remove all defective parts. Reworked lots shall be resubmitted for inspection. Such lots shall be separated from new lots and shall be clearly identified as reinspected lots. If one or more defects are found in this second sample, the lot shall be rejected and shall not be supplied to this specification.

4.6.1.1.3 Disposition of sample units. Sample units which have passed all the group A inspection may be delivered on the contract or order if the lot is accepted and the sample units are still within specified electrical tolerances.

TABLE V. Group A inspection.

Inspection	Requirement paragraph	Test method paragraph
Marking	3.25-3.25.2	4.8.1
Workmanship	3.27	4.8.1
Dielectric withstanding voltage	3.6	4.8.3
Insulation resistance	3.7	4.8.4
Calibration	3.9	4.8.6.2
Seal	3.11	4.8.8.2

TABLE VI. Group A, zero defect sampling plan.

Lot size	Sample size
1 - 13	100 percent
14 - 150	13
151 - 280	20
281 - 500	29
501 - 1,200	34
1,201 - 3,200	42
3,200 - 10,000	50
10,001 - 35,000	60
35,001 - 150,000	74
150,001 - 500,000	90
500,001 and up	102

4.7 Periodic group B inspection. Periodic inspection shall consist of group B inspection. Except where the results of these inspections show noncompliance with the applicable requirements (see 4.7.1.4), delivery of products which have passed group A inspection shall not be delayed pending the results of these qualification verification inspections.

4.7.1 Group B inspection. Group B inspection shall consist of the examinations and tests specified in table III, in the order shown. Group B inspection shall be made on sample units selected from inspection lots which have passed the group A inspection. Contractors that have successfully retained the qualification products listing in accordance with 4.5 shall not be required to perform group B inspection.

4.7.1.1 Sampling plan. Eighteen sample units shall be selected from those covered by a single specification sheet, 24 months after the date of notification of qualification, and after each subsequent 24 month period. When periodic inspection is performed for circuit breakers covered by two specification sheets which are identical, except that one covers circuit breakers with auxiliary contact terminals, equal quantities of sample units with and without auxiliary contacts shall be selected. The 18 sample units shall be composed of six groups of three each. Each three unit group shall be composed of circuit breakers specified by the qualifying activity.

4.7.1.2 Failures. If one or more sample units fail to pass group B inspection, the sample shall be considered to have failed.

4.7.1.3 Disposition of sample units. Sample units which have been subjected to group B inspection shall not be delivered on the contract or order.

4.7.1.4 Noncompliance. If a sample fails to pass group B inspection, the supplier shall take corrective action on the materials or processes, or both, as warranted, and on all units of product which can be corrected and which were manufactured under essentially the same conditions, with essentially the same materials, processes, etc., and which are considered subject to the same failure. Acceptance of the product shall be discontinued until corrective action, acceptable to the Government, has been taken. After the corrective action has been taken, group B inspection shall be repeated on additional sample units (all inspection, or the inspection which the original sample failed, at the option of the Government). Group A inspection may be reinstituted; however, final acceptance shall be withheld until the group B reinspection has shown that the corrective action was successful. In the event of failure after reinspection, information concerning the failure and the corrective action taken shall be furnished to the cognizant inspection activity and the qualifying activity.

4.8 Method of examination and test.

4.8.1 Visual and mechanical examination. Circuit breakers shall be examined to verify that dissimilar metals, interface, physical dimensions, marking, and workmanship are in accordance with the applicable requirements (see 3.1, 3.3 to 3.4.15 inclusive, 3.25 and 3.27.).

4.8.1.1 Resistance to solvents (see 3.25.3). Circuit breakers shall be tested in accordance with the resistance to solvents test, method 215 of MIL-STD-202. The following details and exceptions shall apply.

a. Portion to be brushed: All marking.

b. Number of specimens to be tested: Four; two in solution of 2.1c (terpene) and two in isopropyl alcohol, American Chemical Society (ACS) reagent grade, or isopropyl alcohol in accordance with TT-I-735, grade A or B.

c. Examination: Specimens shall be examined for legibility of marking.

4.8.2 Solderability (see 3.5). Circuit breakers shall be tested in accordance with method 208 of MIL-STD-202. The following details and exceptions shall apply.

a. Number of terminations to be tested: All terminals of each circuit breaker tested.

b. Examination of terminations: Method for evaluation of lugs and tabs shall apply.

4.8.3 Dielectric withstanding voltage (see 3.6). Circuit breakers shall be tested in accordance with method 301 of MIL-STD-202. The following details shall apply.

a. Magnitude of test voltage: 1,250 volts (rms), for points of application 4.8.3c(1), 4.8.3c(2), and 4.8.3c(3); 500 volts (rms), for points of application 4.8.3c(4) and 4.8.3c(5). Duration of application shall be 1 minute for qualification and group B tests; 5 seconds for group A tests.

   Alternate method: Magnitude of test voltage may be increased to 1,500 volts (rms) for points of application 4.8.3c(1), 4.8.3c(2), and 4.8.3c(3); 600 volts (rms) for points of application 4.8.3c(4) and 4.8.3c(5). The time for this application is 1 second.

b. Nature of potential: AC.

c. Points of application of test voltage:

   (1) Between all main circuit breaker terminals tied together and actuating lever and case tied together, with circuit breaker main contacts in closed and open positions.

   (2) Between all auxiliary contact terminals tied together and main circuit breaker terminals tied together, with circuit breaker main contacts in closed and open positions.

   (3) Between poles of multiple pole breakers with the line terminal of each pole tied to the corresponding load terminal of that pole, with circuit breaker main contacts in closed and open positions.

   (4) Between all auxiliary contact terminals tied together and actuating lever and case tied together, with circuit breaker main contacts in closed and open positions.

   (5) Between each open pair of auxiliary contact terminals, with circuit breaker main contacts in closed and open positions.

   (6) Optional points of application: When test is specified to all main circuit breaker terminals tied together, the test may be applied to individual poles.

d. Measurement during test: The circuit shall be continuously monitored during application of the test voltage to determine if the leakage current exceeds 0.5mA.

e. Examination after test: Circuit breakers shall be examined for evidence of flashover, mechanical damage, arcing, breakdown, and excessive current flow.

4.8.4 Insulation resistance (see 3.7). Circuit breakers shall be tested in accordance with method 302 of MIL-STD-202. The following details shall apply.

a. Test condition: A.

b. Point of measurement:

(1) Between all main circuit breaker terminals tied together and actuating lever and case tied together, with circuit breaker main contacts in closed and open positions.

(2) Between all auxiliary contact terminals tied together and main circuit breaker terminals tied together, with circuit breaker main contacts in closed and open positions.

(3) Between poles of multiple pole breakers with the line terminal of each pole tied to the corresponding load terminal of that pole, with circuit breaker main contacts in closed and open positions.

(4) Between all auxiliary contact terminals tied together and actuating lever and case tied together, with circuit breaker main contacts in closed and open positions.

(5) Between each open pair of auxiliary contact terminals, with circuit breaker main contacts in closed and open positions.

(6) Optional points of application: When test is specified to all main circuit breaker terminals tied together, the test may be applied to individual poles.

4.8.5 Resistance or impedance (see 3.8). Circuit breakers shall be tested as follows:

a. Main contacts: Samples shall be divided as evenly as possible (with respect to current rating) into three groups for testing at dc, 60 Hz, and 400 Hz. With the circuit breakers mounted in their normal vertical position, the resistance or impedance shall be measured between main terminals of each pole at 100 percent rated current, and applicable frequency (see 3.1), using the voltmeter-ammeter method. These measurements shall be made and recorded after the circuit breaker has been subjected to these conditions for 1 hour.

b. Auxiliary contacts: Auxiliary contact resistance shall be measured using the voltmeter-ammeter method using a 20 V ac or dc source with limiting resistance to 0.5 ampere. The initial measurement shall be made in the "as received" condition.

4.8.6 Calibration (see 3.9).

4.8.6.1 Method I (used for qualification inspection).

4.8.6.1.1 Time delay A and time delay B. Circuit breakers shall be mounted by their normal mounting means and tested in the vertical mounting position. Circuit breakers shall be connected as shown on figure 2 and conditioned for 1 hour at 100 percent of rated current, rated voltage, and rated frequency. Tripping times shall then be measured when circuit breakers are subjected to the following percentages of applied rated current applied as a step function: 100, 135, 200, 400, 600, and 800. The sample units shall be divided as evenly as possible (with respect to current rating and time delay) into three groups for testing at the following voltages and frequencies: 50 V dc, 240 V ac at 60 Hz, and 240 V ac at 400 Hz. There shall be sufficient time (not less than 10 minutes) between each application of current to permit proper cooling of the circuit breaker. Circuit breakers rated for high inrush shall also be mounted in three mutually perpendicular directions and while mounted in each position shall be subjected to a half wave of a 60 Hz waveform the peak value of which is 800 percent of the rms and DC rated load current and a half wave of a 60Hz or 400 Hz waveform the peak value of which is 1400 percent of the rms and DC rated load current. Normally tests shall be conducted within the rated operating voltage. However, if the inherent resistance or impedance of the circuit breaker precludes attainment of the required percentages of overload current at the rated operating voltage, for the purpose of determining tripping times and high inrush capabilities, the voltage shall be increased as necessary, up to a maximum of 40 percent. If the specified overload current cannot be obtained with a maximum increase in voltage

of 40 percent, tests of these particular overload levels shall be omitted with qualification activity approval. Each section of multipole breakers shall be subjected to the calibration current specified, with remaining pole or poles passing no current.

4.8.6.1.2 Time delay C. Circuit breakers shall be tested as specified in 4.8.6.1.1, except the circuit breakers shall only be subjected to 100 percent, 135 percent, and 200 percent of rated current.

4.8.6.2 Method II (used for group A inspection, high-temperature and low-temperature operation, endurance, moisture resistance, and interrupting capacity and trip-free calibration).

4.8.6.2.1 Time delay A and time delay B. Circuit breakers shall be tested as specified in 4.8.6.1.1, except the circuit breakers shall be tested when mounted in the vertical plane and only 135 percent and 200 percent of rated current shall be applied. The sample units shall be divided as evenly as possible (with respect to current rating and time delay) into three groups for testing at the following current types and frequencies: dc, ac at 60Hz, and ac at 400Hz. The applied voltage shall be at a level sufficient to maintain the specified percent of rated current during testing. Circuit breakers rated for high inrush shall be subjected to a half wave of the 60 Hz waveform or a half wave of the 400 Hz waveform, (see 3.1).

4.8.6.2.2 Time delay C. Circuit breakers shall be tested as specified in 4.8.6.1.2, except the circuit breakers shall be tested when mounted in the vertical plane only and shall only be subjected to 135 percent and 200 percent of rated current.

4.8.7 Actuating lever (see 3.10).

4.8.7.1 Lever strength (see 3.10.1). Circuit breakers shall have a 10-pound load applied to the tip of the actuating lever for 1 minute under each of the following conditions:

a. Normal to the lever axis in the plane of lever travel at each extreme position of the lever.

b. Normal to the lever axis and normal to the plane of lever travel at each extreme position of the lever.

c. Coaxial with the lever axis toward the lever pivot throughout the entire range of lever travel.

d. Coaxial with the lever axis away from the lever pivot throughout the entire range of lever travel.

Circuit breakers shall be examined for evidence of mechanical damage.

4.8.7.2 Lever operating force (see 3.10.2). The force necessary to operate the actuating lever shall be applied in both operating directions at the rounded tip of the lever. The force shall be applied normal to the lever axis and in the plane of lever travel. The magnitude of the force required to operate the lever shall be determined.

4.8.8 Seal (see 3.11).

4.8.8.1 Seal (used for qualification and retention of qualification) (see 3.11). Circuit breakers shall be immersed to a depth not exceeding 10 inches in tap water which may contain a wetting agent. The absolute pressure of the air above the water shall then be reduced to 2.5 inches of mercury and maintained for 1 minute or until air bubbles cease to flow, whichever is longer. During immersion, observation shall be made for any visible air bubbles indicative of leakage emanating from the circuit breakers, either in the form of continuous stream or as bubbles emanating at regular intervals. Bubbles which are determined to be the result of entrapped air on the exterior parts of the immersed circuit breakers shall not be considered a leak.

4.8.8.2 Seal (used for group A inspection) (see 3.11). Circuit breakers shall be immersed to a depth not exceeding 10 inches in tap water which may contain a wetting agent. The manufacturer may, with approval of the qualifying activity, use an alternate liquid provided there is verification that it is equivalent to tap water. In case of dispute, tap water is the referee. During immersion, observation shall be made for any visible air bubbles indicative of leakage emanating from the circuit breakers, either in the form of continuous stream or as bubbles emanating at regular intervals. Bubbles which are determined to be the result of entrapped air on the exterior parts of the immersed circuit breakers shall not be considered a leak.

4.8.9 Panel seal (see 3.12). Circuit breakers shall be secured by their normal mounting means to a suitable test jig. A suggested test jig is shown on figure 3. The test jig shall be immersed in a water-filled glass container containing a wetting agent, with the circuit breaker completely submerged. An air pressure of 15 pounds per square inch shall be applied to the test jig for approximately one-half hour. The circuit breaker and connection to the test jig shall be observed for any visible air bubbles indicative of leakage, either in the form of a continuous stream or as bubbles emanating at regular intervals. The test shall then be repeated by applying air pressure in the opposite direction by reversing the cover.

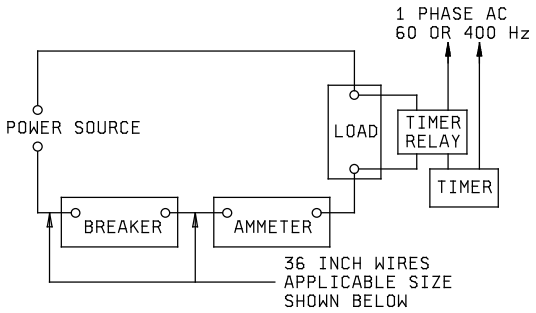

Circuit breaker capacity (amperes)	Wire size (AWG designation)
Less than 6	18
7 to 10 inclusive	16
11 to 15 inclusive	14
16 to 20 inclusive	12

Ammeter: Accuracy within .5 of 1 percent.

FIGURE 2. Suggested calibration test circuit.

4.8.10 High temperature and low temperature operation (see 3.13). Circuit breakers shall be conditioned for 2 hours at -40°C ±2°C, at which temperature the calibration test shall be performed in accordance with 4.8.6.2. Without a warming period, circuit breakers shall then be conditioned for 1 hour at -55°C ±2°C at which temperature the calibration test shall be performed in accordance with 4.8.6.2, except the percent of current needed to trip the circuit breaker shall be 150 instead of 135. While still maintained at -55°C ±2°C, the insulation resistance test shall be performed in accordance with 4.8.4. Circuit breakers shall then be conditioned for 2 hours at 100°C ±2°C, at which temperature the calibration test shall be performed in accordance with 4.8.6.2. While still maintained at 100°C ±2°C, the dielectric withstanding voltage and insulation resistance tests shall be performed in accordance with 4.8.3 and 4.8.4, respectively. Circuit breakers shall be examined for evidence of mechanical damage. Circuit breakers shall then be subjected to the seal test and panel seal test in accordance with 4.8.8 and 4.8.9, respectively.

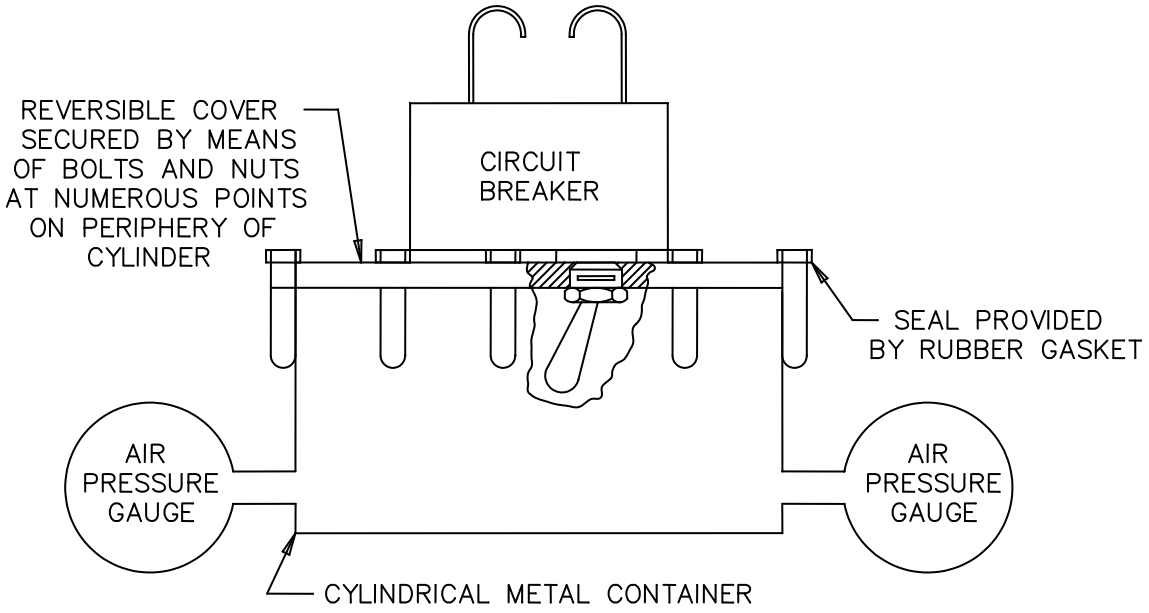

FIGURE 3. Suggested test jig for panel seal test.

4.8.11 Endurance (see 3.14). Circuit breakers shall be subjected to 10,000 mechanically performed make and break operations with the circuit breaker energized to 100 percent of rated current, at 240 V ac, 400 Hz throughout the cycling period, at a rate not to exceed six operations per minute. Circuit breakers shall be continuously monitored and recorded to determine whether any contact has failed to open or close its individual circuit in the proper sequence. Half of the sample units shall be tested with the specified inductive load and half with the specified resistive load (see 4.8.11.1).

Circuit breakers shall be connected as shown in the following diagram:

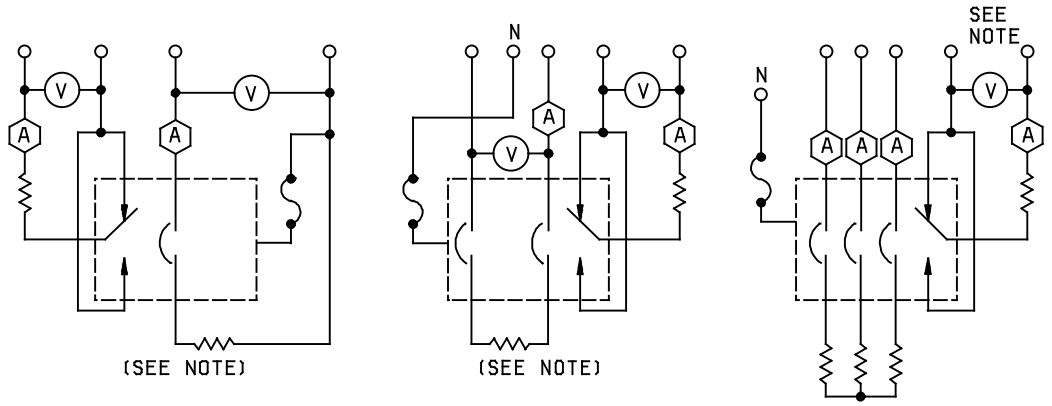

NOTE: This portion of the diagram applies only to circuit breakers with auxiliary contacts.

Each pole of the multiple breakers shall be simultaneously subjected to the required load. When applicable, the auxiliary contacts shall also make and break the specified load (see 3.4.8.2). An operating cycle is defined as the mechanical closing and opening of the breaker, and the ratio of "on" time to "off" time shall be less than 1 to 5. The mechanical operation shall simulate manual operation of the breaker, including overtravel, if any (see 6.6.4). All exposed metal parts of the circuit breaker, except terminals, shall be maintained at the power source ground or neutral through a normal blow fuse rated at 5 percent of the test load or 100 milliamperes, whichever is greater. Connection to the circuit breaker shall be made to one side of the power source for half of the cycles, and to the other side for the other half of the cycles. The fuse shall be observed during the test to determine if failure occurs prior to conclusion of the test. Circuit breakers shall be examined for evidence of mechanical damage or loosening of parts. Following the test, circuit breakers shall be subjected to the following tests.

a. Dielectric withstanding voltage (see 4.8.3).

b. Insulation resistance (see 4.8.4).

c. Calibration (see 4.8.6.2).

d. Seal (see 4.8.8).

e. Auxiliary contact resistance (see 4.8.5b). Contact resistance shall not exceed 0.4 ohm.

4.8.11.1 Loads. For ac inductive loads, the power factor shall be 0.75 to 0.80. For ac resistive loads, the power factor shall be between 0.90 and unity.

4.8.12 Terminal strength (see 3.15). Circuit breakers shall be tested in accordance with method 211 of MIL-STD-202. The following details and exceptions shall apply.

a. Test condition: A.

b. Applied force: Main contact terminals: 4 1/2 pounds. Auxiliary contact terminals: 2.

c. Direction of force: Parallel to the longitudinal axis of the terminal, perpendicular to the longitudinal axis of the terminal, or in any other direction deemed most likely to cause failure. However, no terminal shall be tested in more than one direction.

d. Examinations after test: Circuit breakers shall be subjected to the seal test (see 4.8.8), and shall be examined to verify compliance with 3.15.

4.8.13 Vibration, high frequency (see 3.16). Circuit breakers shall be tested in accordance with method 204 of MIL-STD-202. The following details and exceptions shall apply.

a. Tests and measurements prior to vibration: Not applicable.

b. Test condition: C.

c. Mounting method: Normal mounting means.

d. Electrical load conditions: Half the circuit breakers shall be tested with the main contacts closed, while energized at 100 percent of rated current, at 12 volts dc. The other half of the circuit breakers shall be tested with the main contacts open and unenergized.

e. Measurements during vibration: Each circuit breaker shall be monitored to determine opening or closing of contacts in the "on" and "off" position.

f. Examination after vibration: Circuit breakers shall be examined for evidence of mechanical and electrical damage.

4.8.14 Moisture resistance (see 3.17). Circuit breakers shall be tested in accordance with method 106 of MIL-STD-202. The following details and exceptions shall apply.

a. Mounting: Mounted horizontally on a nickel plated brass panel.

b. Initial measurements: Immediately following the initial drying period, resistance or impedance shall be measured as specified in 4.8.5.

c. Electrical load conditions: During the first 2 hours of step 1 and step 4, circuit breakers shall be energized at rated current and at the applicable frequency (see 3.1).

d. Steps 7a and 7b are not applicable.

e. Final measurements: Upon completion of the 10th cycle and while still in the humidity chamber, insulation resistance and resistance or impedance shall be measured as specified in 4.8.4 and 4.8.5 respectively. After the 24 hour drying period, insulation resistance shall again be measured as specified in 4.8.4.

f. Examination after test: Examine for evidence of breaking, cracking, spalling, or loosening of terminals.

g. Tests after moisture resistance test: Circuit breakers shall be subjected to the following tests:

(1) Dielectric withstanding voltage (see 4.8.3).

(2) Calibration (see 4.8.6.2).

(3) Seal (4.8.8).

(4) Panel seal (see 4.8.9).

4.8.15 Thermal shock (see 3.18). Circuit breakers shall be tested in accordance with method 107 of MIL-STD-202. The following details shall apply.

a. Mounting: Normal mounting means and in such a manner that there is at least 1 inch of free air space around each circuit breaker.

b. Test condition: B.

c. Examination after cycling: Circuit breakers shall be examined for evidence of mechanical damage.

4.8.16 Shock (specified pulse) (see 3.19). Circuit breakers shall be tested in accordance with method 213 of MIL-STD-202. The following details shall apply.

a. Mounting method: Normal mounting means.

b. Test condition: I.

c. Electrical load conditions and measurements: Of the three shocks in each direction required, two shocks shall be performed with the circuit breaker energized at 100 percent of rated current at 12 volts dc, except that for the directions with the operating lever pivot up (table mount) and the operating lever pivot down (ceiling mount), no voltage or current shall be applied. Each energized shock shall be monitored to determine opening of the main or auxiliary circuit breaker contacts. The remaining shock in each direction shall be performed with the circuit breaker contacts open and unenergized and shall be monitored to determine closing of the main or auxiliary contacts.

d. Examination after shock (see 3.19): Circuit breakers shall be examined for evidence of mechanical and electrical damage.

4.8.17 Trip free calibration (see 3.20). The circuit breaker lever shall be physically held in the closed position and the breaker subjected to the calibration test as specified in 4.8.6.1.

4.8.18 Salt atmosphere (corrosion) (see 3.21). Circuit breakers shall be tested in accordance with method 101 of MIL-STD-202. The following details shall apply:

a. Test condition: B.

b. Examination after exposure: The mounting hardware shall be removed at the conclusion of the test. Circuit breakers shall be examined for corrosion or evidence of mechanical and electrical damage.

c. Tests after salt atmosphere test:

(1) Dielectric withstanding voltage (see 4.8.3).

(2) Calibration (see 4.8.6.2).

(3) Seal (4.8.8).

(4) Panel seal (see 4.8.9).

4.8.19 Barometric pressure (reduced) (see 3.22). Circuit breakers shall be tested in accordance with method 105 of MIL-STD-202. The following details shall apply:

a. Test condition: B.

b. Tests during subjection to reduced pressure: Dielectric withstanding voltage shall be performed as specified in 4.8.3, except the magnitude of test voltage shall be 500 volts (rms) for all points of application.

c. Examination after tests: As specified in 4.8.3e.

4.8.20 Temperature rise (see 3.23). Circuit breakers shall be connected with not less than 4 feet of No. 16 wire for ratings up to 5 amperes, No. 14 for ratings of 5 amperes through 15 amperes, and No. 12 for ratings above 15 amperes. Connections to the circuit breaker terminals shall be soldered. The temperature rise of the terminals shall be determined by the use of a thermocouple with a .0100 inch (0.254 mm) diameter (No. 30 AWG), or smaller wire. The thermocouple shall be cemented to the terminals, using minimum quantity of cement. One hundred percent rated current shall be applied to circuit breakers for 1 hour. Circuit breakers shall not trip and the terminal temperature rise shall not exceed the values specified in 3.23.

4.8.21 Interrupting capacity (see 3.24). The sample units shall be operated through interrupting cycles (ac or dc, as applicable) as specified herein. Circuit breakers shall be connected to the power source so that the applicable short circuit current specified below, at the corresponding open circuit voltage and frequency specified, is provided at the circuit breaker terminals. The power factor shall be 75 percent to 80 percent for the 60 Hz test and 30 percent to 80 percent for the 400 Hz test.

a. 500 amperes at 50 V dc ±2 V dc.

b. 300 amperes at 240 V ac ±5 V ac, 60 Hz or 400 Hz as applicable.

The sample units shall be divided as evenly as possible (with respect to time delay) into three groups. One group shall be tested at 50 V dc, one at 240 V ac, 60 Hz and one at 240 V ac, 400 Hz. The test circuit shown on figure 4 may be used as a guide and the two methods of interrupt as shown (designated by symbols "CO" and "OCO") shall apply. The circuit diagrams shown on figure 5 shall be used for the actual hook-up of circuit breakers under test. For dc operation, the circuit breakers shall be subjected to two operations (with all poles connected in the circuit), in which the circuit breaker is closed before initiation of the short circuit current (symbol "CO"), followed by one operation in which the fault is initiated first, and the circuit breaker is closed in to complete the fault (symbol "OCO"). For ac operations, single pole breakers shall be subjected to three operations in the following order: "CO", "OCO", "CO". For multiple pole breakers, each pole shall be subjected to one "CO" operation. This shall be followed by one "OCO" and one "CO" operation with all poles connected in the circuit. After each interrupt, the open circuit voltage specified shall be maintained across the breaker for a minimum of 5 seconds. There shall be sufficient time between each operation (not less than 10 minutes) to permit proper cooling of the circuit breaker. Circuit breakers that are not capable of being mechanically and electrically reset within 10 minutes shall be rejected. The circuit breakers shall be observed for automatic tripping and satisfactory operation of the auxiliary contacts. Following the last operation, circuit breakers shall be subjected to the following tests.

c. Dielectric withstanding voltage (see 4.8.3).

d. Calibration at 200 percent of rated current (see 4.8.6.2).

e. Insulation resistance (see 4.8.4).

f. Seal (see 4.8.8).

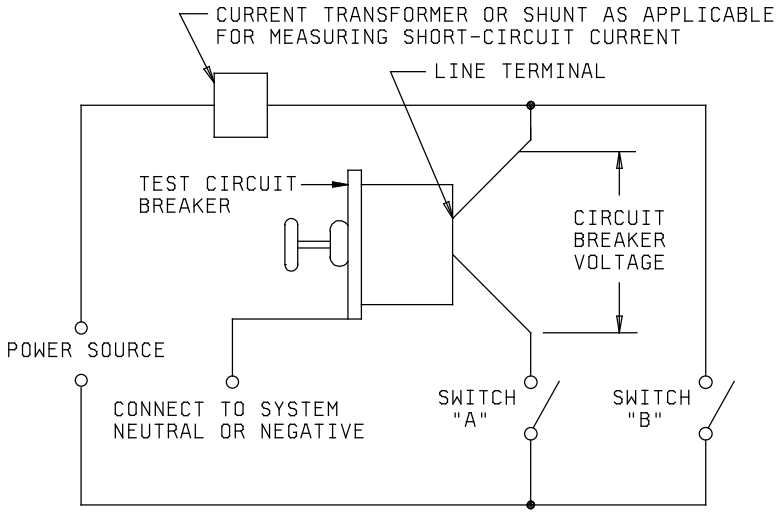

AC or DC short circuit interrupt test (symbol "CO")

Open test circuit breaker and switch "A".

Close switch "B" and determine if current capacity of circuit is in accordance with applicable requirement of test breaker.

Open switch "B".

Close test circuit breaker.

Close switch "A".

AC or DC close in interrupt test (symbol "OCO")

Open test circuit breaker and switch "A".

Close switch "B" and determine if current capacity of circuit is in accordance with applicable requirement of test breaker.

Open switch "B".

Close switch "A".

Close test circuit breaker.

Short circuit current shall be measured by a current transformer or shunt as indicated and suitable recording oscillograph. The voltage across the breaker shall be recorded simultaneously with short circuit current and at the point indicated.

FIGURE 4. Interrupting capacity test circuit.

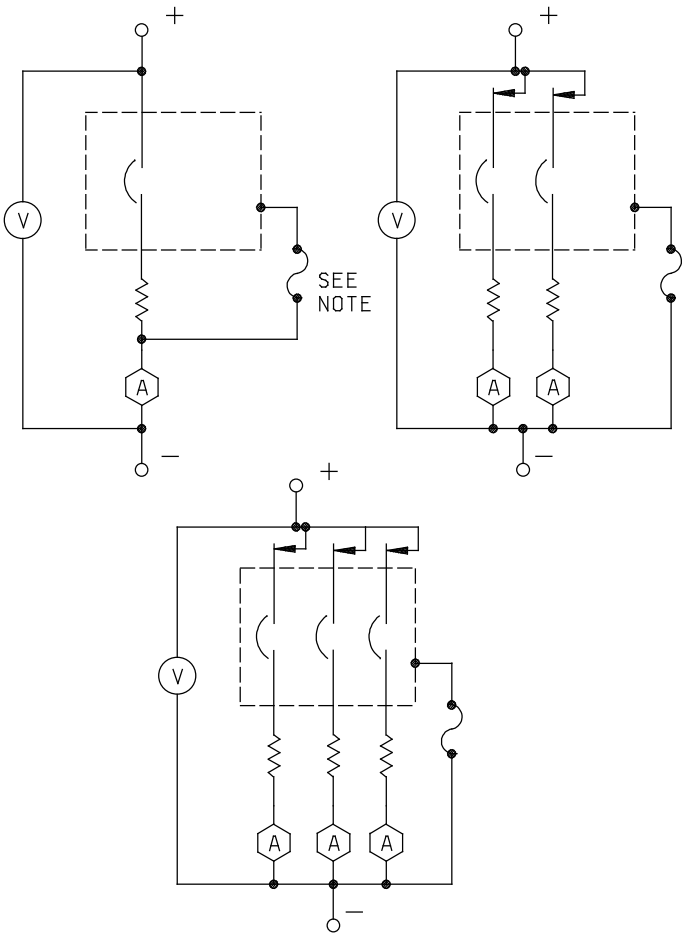

DC CIRCUIT WIRING DIAGRAMS

NOTE: Indicating fuse, 3 amperes, nontime delay.

FIGURE 5. Interrupting capacity test circuit wiring diagrams.

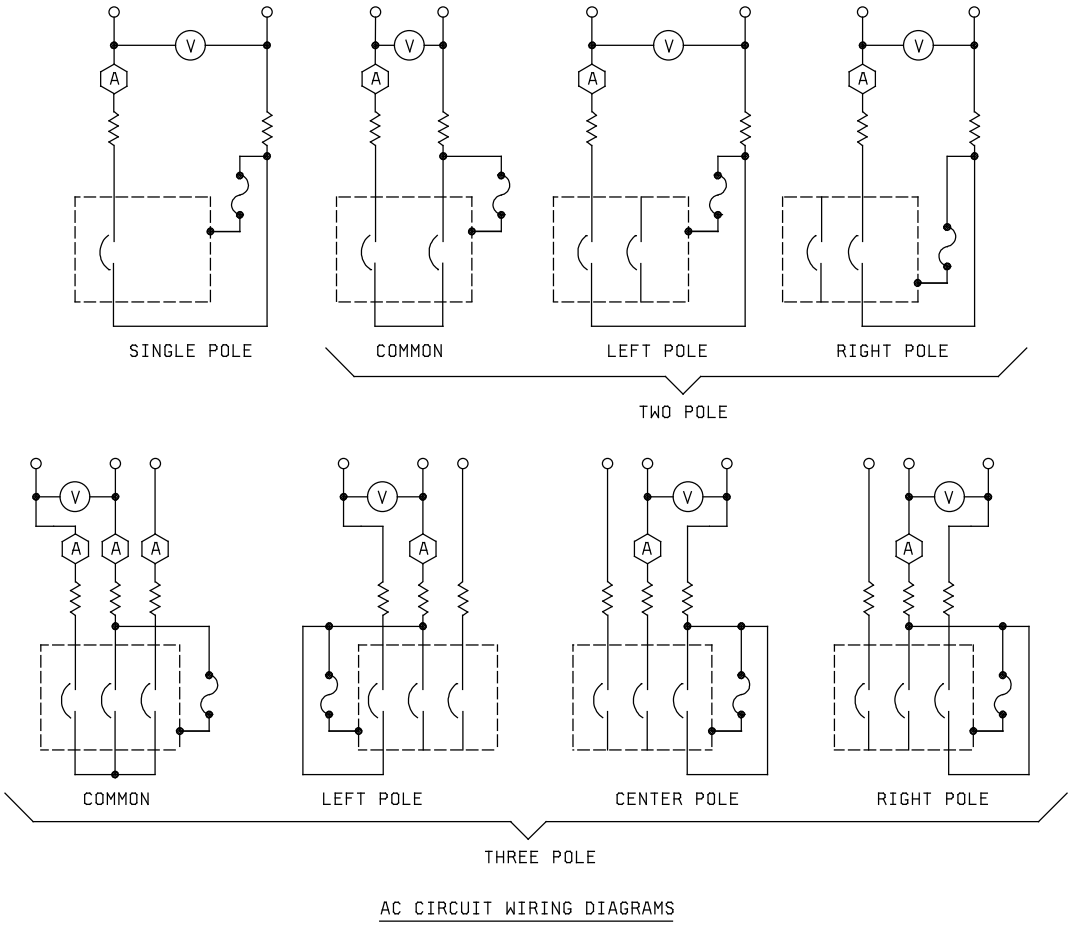

FIGURE 5. Interrupting capacity test circuit wiring diagrams - Continued.

5. PACKAGING.

5.1 Packaging. For acquisition purposes, the packaging requirements shall be as specified in the contract or order (see 6.2). When packaging of materiel is to be performed by DoD or in-house contractor personnel, these personnel need to contact the responsible packaging activity to ascertain packaging requirements. Packaging requirements are maintained by the Inventory Control Point's packaging activities within the Military Service or Defense Agency, or within the military service's system commands. Packaging data retrieval is available from the managing Military Department's or Defense Agency's automated packaging files, CD-ROM products, or by contacting the responsible packaging activity.

6. NOTES

(This section contains information of a general or explanatory nature that may be helpful, but is not mandatory.)

6.1 Intended use.

6.1.1 General. Circuit breakers covered by this specification are intended primarily for use in the protection of electronic circuits and should be used where starting inrushes of transient overloads are neither heavy nor prolonged and the equipment must have relatively fast protection. These circuit breakers are military unique in that they must operate satisfactorily under the following demanding conditions: Endurance testing of 10,000 mechanically performed make and break operations while energized to 100% of rated current, and they must be fully sealed when submersed in addition to being panel sealed. These requirements are verified under a qualification system. These circuit breakers should not be used in circuits (e.g., primary power circuits of electric systems) whose short circuit current potential is greater than the interrupting capacity of the breaker unless the circuit is properly protected by other means. These circuit breakers are not switches and should not be used as such (see Engineering Practice Study, "Using Circuit Breakers as Switches" for more information).

6.1.2 Derating. Circuit breakers should continuously carry normal load current; however, the value chosen should be the lowest rating that will not open the circuit breaker inadvertently. The following factors should be considered in selecting the proper current rating and time delay curve of a circuit breaker:

a. The average (steady state) conditions of the load.

b. The initial start-up current and duration of the current of the equipment to be protected.

c. Transient overloads and their duration.

d. Comparison of the time delay characteristics of the circuit breaker with the time current characteristics (including starting or overload surges) of the equipment, component, or wire.

6.2 Acquisition requirements. Acquisition documents must specify the following:

a. Title, number, and date of this specification, the applicable specification sheet, and the complete part number (see 3.1).

b. ASSIST Online database should be cited in the solicitation, and if required, the specific issue of individual documents referenced. If not otherwise specified, the versions of the individual documents referenced will be those in effect on the date of release of the solicitation (see 2.1).

c. Packaging requirements (see 5.1).

6.3 Qualification. With respect to products requiring qualification, awards will be made only for products which are, at the time of award of contract, qualified for inclusion in Qualified Products List QPL No. 39019 whether or not such products have actually been so listed by that date. The attention of the contractors is called to these requirements, and manufacturers are urged to arrange to have the products that they propose to offer to the Federal Government tested for qualification in order that they may be eligible to be awarded contracts or orders for the products covered by this specification. Information pertaining to qualification of products may be obtained from the Defense Supply Center Columbus, ATTN: DSCC-VQP, 3990 E. Broad Street, Columbus, OH 43218, online at http://www.dscc.dla.mil/programs/qmlqpl/.

6.3.1 Provisions governing qualification. Copies of SD-6, “Provisions Governing Qualification” may be obtained upon application to Defense Printing Service Detachment Office, Standardization Document Order Desk, Building 4D Customer Service, 700 Robbins Avenue, Philadelphia, PA 19111-5094.)

6.4 Intermetallic contact. The finishing of metallic areas to be placed in intimate contact by assembly presents a special problem, since intermetallic contact of dissimilar metals results in electrolytic couples that promote corrosion through galvanic action. To provide the required corrosion protection, intermetallic couples should be selected to meet the performance requirements of this specification.

6.5 Material and finishes. Pure tin finishes may result in tin whisker growth. The use of alloys with tin content greater than 97 percent, by mass, may exhibit tin whisker growth problems after manufacture. Tin whiskers may occur anytime from a day to years after manufacture and can develop under typical operating conditions, on products that use such materials. Conformal coatings applied over the top of a whisker-prone surface will not prevent the formation of tin whiskers. Alloys of 3 percent lead, by mass, have been shown to inhibit the growth of tin whiskers. For additional information on tin finish, refer to ASTM-B545 (Standard Specification for Electrodeposited Coatings of Tin), or for tin plating see ASTM-B545 and ASTM-B339.

6.6 Definitions.

6.6.1 Auxiliary contacts (see 1.1 and 3.4.8.2). Auxiliary contacts are those mechanically interlocked with and operated by the main contacts of the circuit breaker and intended for use in monitoring circuits for signaling, electrical interlocking, or other purposes.

6.6.2 Line terminal (see 3.4.8.1). The terminal attached to the isolated stationary main contact of the circuit breaker, with the breaker in the open or tripped position, is considered the line terminal. If both main contacts of a circuit are isolated, only one terminal is to be designated the line terminal.

6.6.3 Multipole circuit breaker (see 3.4.4). A multipole circuit breaker has two or more poles controlled by a single actuating member.

6.6.4 Overtravel (see 4.8.11). Overtravel is the distance between the normal operating "on" and "off" positions of the actuating lever and the extreme positions to which the lever may be moved in either direction.

6.6.5 Time delay (see 3.9). Time delay is the delay factor purposely designed into the tripping time of a circuit breaker.

6.6.6 Tripping time (see 3.9). Tripping time is the total interval of elapsed time from the instant of applying a given overcurrent to the circuit breaker to the completion of the interruption of the circuit.

6.6.7 Product line. Includes the entire production of all circuit breakers in the same basic sealed enclosures as those covered by this specification.

6.7 Warning. Potentially hazardous situations are inherent in some of the test procedures specified in this specification. Precautions should therefore be taken to ensure that test personnel are adequately protected and observe the necessary safety measures at all times.

6.8 Background information. Previous issues of this specification contained circuit breakers with five separate voltage/frequency ratings. It is now possible to supply one circuit breaker which will function properly at all five voltage/frequency ratings.

6.9 Subject (key word) listing.

Calibration
Contacts
Multipole
Panel seal
Single pole

6.10 Environmentally preferable material. Environmentally preferable materials should be used to the maximum extent possible to meet the requirements of this specification. As of the dating of this document, the U.S. Environmentally Protection Agency (EPA) is focusing efforts on reducing 31 priority chemicals. The list of chemicals and additional information is available on their website at http://www.epa.gov/osw/hazard/wastemin/priority.htm. Included in the list of 31 priority chemicals are cadmium, lead, and mercury. Use of the materials on the list should be minimized or eliminated unless needed to meet the requirements specified herein (see 3.3).

6.11 Changes from previous issue. The margins of this specification are marked with vertical lines to indicate where changes from the previous issue were made. This was done as a convenience only and the Government assumes no liability whatsoever for any inaccuracies in these notations. Bidders and contractors are cautioned to evaluate the requirements of this document based on the entire content irrespective of the marginal notations and relationship to the last previous issue.

APPENDIX A

PROCEDURE FOR QUALIFICATION INSPECTION

A.1 SCOPE

A.1.1 Scope. This appendix details the procedure to submit samples, with related data, for qualification inspection of circuit breakers covered by this specification. The procedure for extending qualification of the required sample to other circuit breakers covered by this specification is also included. This appendix is a mandatory part of the specification. The information contained herein is intended for compliance only.

A.2 APPLICABLE DOCUMENTS

This section is not applicable to this appendix.

A.3 SUBMISSION

A.3.1 Sample. Unless otherwise specified, 36 sample circuit breakers for each specification sheet for which qualification is sought, shall be submitted. When qualification is sought for two circuit breakers covered by two specification sheets that are identical, except that one covers circuit breakers with auxiliary contact terminals and the other covers circuit breakers without auxiliary contact terminals, the former shall be submitted. The 36 sample units shall be composed of six groups of six each.

Two of the 6-unit groups shall be of the highest current rating and one 6-unit group shall be of the lowest current rating. The other three 6-unit groups may be composed of the highest or lowest current rating at the option of the manufacturer; however, the sample units within each 6-unit group shall be either all of the highest current rating or all of the lowest current rating. Each 6-unit group shall be divided equally among the three time delays, i.e., A, B, and C. When qualification is sought for the high inrush feature, only circuit breakers of the high inrush design shall be submitted in delays A and B; the standard delay shall be submitted for delay C. No failures shall be allowed.

A.3.2 Certificate of material. When submitting samples for qualification, the manufacturer shall submit certification, in duplicate, that the materials used in their components are in accordance with the applicable specification requirements.

A.3.3 Description of items. The manufacturer shall submit a detailed description of the circuit breakers being submitted for qualification, including materials used for the envelope.

A.4 EXTENT OF QUALIFICATION

A.4.1 Current rating range. The current rating range included in the qualification of circuit breakers covered by any one specification sheet will be between the two extreme current ratings (highest and lowest) that pass the required qualification inspection. Qualification of circuit breakers with auxiliary contact terminals will also grant qualification to circuit breakers that are identical without auxiliary contact terminals. Qualification of circuit breakers with the high inrush feature will also grant qualification to circuit breakers that are identical without the high inrush feature.

A.4.2 Configuration types. Qualification of circuit breakers of the configuration 1 type will also grant qualification to circuit breakers that are of the configuration 2 type provided that the type 2 are subjected to and pass the group III qualification inspection tests in table III. Six sample units shall be selected from MIL-PRF-39019/6, configuration 2, and qualification will be extended to MIL-PRF-39019/1 through MIL-PRF-39019/6. Additionally, six samples may be selected from MIL-PRF-39019/4, configuration 2, and qualification will be extended to MIL-PRF-39019/1 through MIL-PRF-39019/4.

Custodians:
Army - CR
Navy - EC
Air Force - 85
DLA - CC

Review activities:
Army - AT, AV, MI
Navy - AS, MC
Air Force - 19, 99
NASA - NA

Preparing activity:
Army - CR

Agent:
DLA - CC

(Project 5925-2009-031)

NOTE: the activities listed above were interested in this document as of the date of this document. Since organizations and responsibilities can change, you should verify the currency of the information above using the ASSIST Online database at https://assist.daps.dla.mil.