INCH-POUND

MIL-PRF-39017G
w/ Amendment 2
9 October 2014
SUPERSEDING
MIL-PRF-39017G
w/ Amendment 1
5 June 2009

PERFORMANCE SPECIFICATION

RESISTOR, FIXED, FILM (INSULATED), NONESTABLISHED RELIABILITY, AND ESTABLISHED RELIABILITY, GENERAL SPECIFICATION FOR

This specification is approved for use by all Departments and Agencies of the Department of Defense.

1. SCOPE

1.1 Scope. This specification covers the general requirements for nonestablished reliability (non-ER) and established reliability (ER), insulated, film, fixed resistors. These resistors are capable of full load operation at an ambient temperature of 70°C and have a resistance temperature characteristic of 100 parts per million (PPM) and 350 PPM per degree Celsius (PPM/°C). The ER resistors have life failure rate (FR) levels ranging from 1.0 percent to 0.001 percent per 1,000 hours (see 1.2.1.4). These FR levels are established at a 60 percent confidence level on the basis of life tests. Designers are CAUTIONED on using these resistors in high power pulse applications (see 6.13.2).

1.2 Classification.

1.2.1 Part or Identifying Number (PIN). The PIN is in the following form, and as specified (see 3.1).

RLR20	C	1002	F	M
Style (1.2.1.1)	Terminal (1.2.1.2)	Resistance (1.2.1.5)	Resistance tolerance (1.2.1.3)	Product level Designator (1.2.1.4)

1.2.1.1 Style. The style is identified by the three-letter symbol "RLR" followed by a two-digit number; the letters identify insulate, film, fixed resistors, and the number identifies the size and power rating of the resistors.

1.2.1.1.1 Performance requirements. The performance requirements are identified in accordance with table I.

Comments, suggestions, or questions on this document should be addressed to: Army Standardization Program Lead Engineering Operations Division (PRD), ATTN: CERDEC, Pod 153, Bldg. 6010, Aberdeen Proving Ground, MD 21005 or emailed to usarmy.APG.cerdec.mbx.standardization-crx@mail.mil. Since contact information can change, you may want to verify the currency of this address information using the ASSIST Online database at https://assist.dla.mil.

AMSC N/A FSC 5905
DISTRIBUTION STATEMENT A. Approved for public release; distribution is unlimited.

TABLE I. Performance requirements.

Style	RLR05		RLR07		RLR20		RLR32	
Maximum resistance temperature characteristic in ppm/°C (Ref. to 25°C) (see 3.1)	±100 ppm/°C	±350 ppm/°C	±100 ppm/°C	±350 ppm/°C	±100 ppm/°C	±350 ppm/°C	±100 ppm/°C	±350 ppm/°C
Maximum ambient temperature at rated wattage (see figure 2)	70°C	70°C	70°C	70°C	70°C	70°C	70°C	70°C
Maximum ambient temperature at zero wattage (see figure 2)	150°C	125°C	150°C	125°C	150°C	125°C	150°C	125°C
Power rating and maximum dc or rms voltage	.125 W 200V	.125 W 200V	.25 W 250V	.25 W 250V	.5 W 350V	.5 W 350V	1 W 500V	1 W 500V
Resistance tolerance (in percent)	1, 2	2, 5, 10	1, 2	2, 5, 10	1, 2	2, 5, 10	1, 2	2, 5, 10
Minimum resistance (ohms)	2.7	1.1 M	1	11 M	1	3.3 M	1	3.0 M
Maximum resistance (ohms)	1 M	22 M	10 M	22 M	3.01 M	22 M	2.7 M	22 M
Maximum percent change in Resistance ±: 1/								
Power conditioning (3.8)	.5	1	.5	1	.5	1	.5	1
Thermal shock (3.10)	.25	1	.25	1	.25	1	.25	1
Low temperature storage (3.12)	.25	.5	.25	.5	.25	.5	.25	.5
Low temperature operation (3.13)	.25	.5	.25	.5	.25	.5	.25	.5
Short time overload (3.14)	.5	1	.5	1	.5	1	.5	1
Terminal strength (3.15)	.25	.5	.25	.5	.25	.5	.25	.5
Dielectric withstanding voltage (3.18)	.25	.25	.25	.25	.25	.25	.25	.25
Resistance to soldering heat (3.20)	.25	.5	.25	.5	.25	.5	.25	.5
Moisture resistance (3.21)	1	5	1	5	1	5	1	5
Shock (specified pulse) (3.22)	.5	.5	.5	.5	.5	.5	.5	.5
Vibration, high frequency (3.23)	.5	.5	.5	.5	.5	.5	.5	.5
Life (3.24)		4		4		4		4
High temperature exposure (3.25)	2	5	2	5	2	5	2	5
Insulation resistance - dry (3.19)	1,000 MΩ Min	1,000 MΩ Min	1,000 MΩ Min	1,000 MΩ Min	1,000 MΩ Min	1,000 MΩ Min	1,000 MΩ Min	1,000 MΩ Min
Insulation resistance - wet (3.21)	100 MΩ Min	100 MΩ Min	100 MΩ Min	100 MΩ Min	100 MΩ Min	100 MΩ Min	100 MΩ Min	100 MΩ Min

1/ Where total resistance change is 1.0 percent or less, it is considered as ±(___ percent +0.05 ohm).

1.2.1.2 Terminals. The terminals are identified by a single letter in accordance with table II.

TABLE II. Terminals.

Symbol	Type of terminal
C 1/	Solderable/weldable (type C41, C32, or C52 of MIL-STD-1276)

1/ The maximum thickness of 200 microinches is not applicable.

1.2.1.3 Resistance tolerance. The resistance tolerance is identified by a single letter in accordance with table III.

TABLE III. Resistance tolerance. 1/

Symbol	Resistance tolerance
	Percent (±)
F	1
G	2
J	5
K	10

1/ The resistance tolerance available is characteristic dependent (see 3.1).

1.2.1.4 Product level designator. The product level designator as shown in table IV is signified by a single letter (M, P, R, S or C), which identifies the product level for which the resistor is qualified.

TABLE IV. Product level designator.

Product level designator	Product level
C	Non-ER
M	1/ 1.0
P	1/ 0.1
R	1/ 0.01
S	1/ 0.001

1/ FR in percent/1,000 hours

1.2.1.5 Resistance. The nominal resistance expressed in ohms is identified by a resistance designation utilizing four digits. Minimum and maximum resistance values are as specified (see 3.1).

1.2.1.5.1 Four digit resistance designation. The four digit resistance designation is applicable to resistance tolerances “F” (1.0 percent), “G” (2.0 percent), “J” (5.0 percent), and “K” (10.0 percent). The nominal resistance identified by four digits; the first three digits represent significant figures and the last digit specifies the number of zeros to follow. When the value of resistance is less 100 ohms, or when fractional values of an ohm are required, the letter “R” is substituted for of the significant digits to represent the decimal point. When the letter “R” is used, succeeding digits of the group represent significant figures. The resistance value designations are shown in table V. Standard values for every decade follows the sequence demonstrated for 10 decade to 100 decade in table VI. Resistance values not listed in table VI for the appropriate resistance tolerance are considered as not conforming to the specification. Although resistance tolerances “G”, “J”, and “K” normally require less than three significant figures to adequately describe the true resistance value, for the purpose of this specification, the nominal value is three significant figures followed by the fourth digit to signify the number of zeros to follow.

TABLE V. Designation of resistance values for resistance-tolerances of 1.0, 2.0, 5.0, and 10.0 percent.

Designation	Resistance ohms
1R00 to 9R76 inclusive	1.00 to 9.76 inclusive
10R0 to 97R6 inclusive	10.0 to 97.6 inclusive
1000 to 9760 inclusive	100 to 976 inclusive
1001 to 9761 inclusive	1,000 to 9,760 inclusive
1002 to 9762 inclusive	10,000 to 97,600 inclusive
1003 to 9763 inclusive	100,000 to 976,000 inclusive
1004 to 9764 inclusive	1,000,000 to 9,760,000 inclusive
1005 to 9765 inclusive	10,000,000 to 97,600,000 inclusive

TABLE VI. Standard resistance value for 10 to 100 decade.

1.0	2.0 5.0	10.0		1.0	2.0 5.0	10.0		1.0	2.0 5.0	10.0		1.0	2.0 5.0	10.0
10.00	10.00	10.00		18.70				33.20				59.00		
10.20				19.10				34.00				60.40		
10.50				19.60				34.80				61.90		
10.70				20.00	20.00			35.70					62.00	
11.00	11.00			20.50					36.00			63.40		
11.30				21.00				36.50				64.90		
11.50				21.50				37.40				66.50		
11.80					22.00	22.00		38.30					68.00	68.00
	12.00	12.00		22.10					39.00	39.00		68.10		
12.10				22.60				39.20				69.80		
12.40				23.20				40.20				71.50		
12.70				23.70				41.20				73.20		
13.00	13.00				24.00			42.20				75.00	75.00	
13.30				24.30					43.00			76.80		
13.70				24.90				43.20				78.70		
14.00				25.50				44.20				80.60		
14.30				26.10				45.30					82.00	82.00
14.70				26.70				46.40				82.50		
15.00	15.00	15.00			27.00	27.00			47.00	47.00		84.50		
15.40				27.40				47.50				86.60		
15.80				28.00				48.70				88.70		
	16.00			28.70				49.90				90.90		
16.20				29.40					51.00				91.00	
16.50					30.00			51.10				93.10		
16.90				30.10				52.30				95.30		
17.40				30.90				53.60				97.60		
17.80				31.60				54.90						
	18.00	18.00		32.40					56.00	56.00				
18.20					33.00	33.00		56.20						
								57.60						

2. APPLICABLE DOCUMENTS

2.1 General. The documents listed in this section are specified in sections 3 and 4 of this specification. This section does not include documents cited in other sections of this specification or recommended for additional information or as examples. While every effort has been made to ensure the completeness of this list, document users are cautioned that they must meet all specified requirements documents cited in sections 3 and 4 of this specification, whether or not they are listed.

2.2 Government documents.

2.2.1 Specifications, standards, and handbooks. The following specifications, standards, and handbooks form a part of this document to the extent specified herein. Unless otherwise specified, the issues of these documents are those cited in the solicitation or contract.

DEPARTMENT OF DEFENSE SPECIFICATIONS

MIL-PRF-39017/1 - Resistors, Fixed, Film, (Insulated), Nonestablished Reliability and Established Reliability, Style RLR07.

MIL-PRF-39017/2 - Resistors, Fixed, Film, (Insulated), Nonestablished Reliability and Established Reliability, Style RLR20.

MIL-PRF-39017/3 - Resistors, Fixed, Film, (Insulated), Nonestablished Reliability and Established Reliability, Style RLR32.

MIL-PRF-39017/5 - Resistors, Fixed, Film, (Insulated), Nonestablished Reliability and Established Reliability, Style RLR05.

DEPARTMENT OF DEFENSE STANDARDS

MIL-STD-202 - Electronic and Electrical Component Parts, Test Methods for.

MIL-STD-690 - Failure Rate Sampling Plans and Procedures.

MIL-STD-790 - Standard Practice for Established Reliability and High Reliability Qualified Products List (QPL) Systems for Electrical, Electronic, and Fiber Optic Parts Specifications

MIL-STD-810 - Environmental Test Methods and Engineering Guidelines.

MIL-STD-1285 - Marking of Electrical and Electronic Parts.

* (Copies of these documents are available online at http://quicksearch.dla.mil.)

2.3 Non-government publications. The following documents form a part of this document to the extent specified herein. Unless otherwise specified, the issues of the documents which are those listed in the solicitation or contract.

AMERICAN NATIONAL STANDARD (ANS)

J-STD-004 - Requirements for Soldering Fluxes.

* (DoD activities may obtain copies online at http://quicksearch.dla.mil. Private sector and other Government agencies may purchases copies of this document online at http://www.ipc.org).

AMERICAN SOCIETY FOR TESTING AND MATERIALS (ASTM)

ASTM D1193 - Reagent Water.

* (Copies of these documents are available online at http://www.astm.org.)

* TECHAMERICA

EIA-554-1 - Assessment of Average Outgoing Quality Levels in Parts Per Million (PPM).
EIA-557 - Statistical Process Control Systems (SPC).

* (Copies of these documents are available online at http://www.techamerica.org/standards.)

* 2.4 Order of precedence. Unless otherwise noted herein or in the contract, in the event of a conflict between the text of this document and the references cited herein (except for related specification sheets), the text of this document takes precedence. Nothing in this document, however, supersedes applicable laws and regulations unless a specific exemption has been obtained.

3. REQUIREMENTS

3.1 Specification sheets. The individual item requirements shall be as specified herein and in accordance with the applicable specification sheet. In the event of any conflict between the requirements of this specification and the specification sheet, the latter shall govern (see 6.2).

3.2 Qualification. Resistors furnished under this specification shall be products that are authorized by the qualifying activity for listing on the applicable Qualified Products List (QPL) before contract award (see 4.4 and 6.3). In addition, the manufacturer shall obtain certification from the qualifying activity that the QPL system requirements of 3.3 and 4.2 have been met and are being maintained. Authorized distributors that are approved to MIL-STD-790 distributor requirements by the QPL manufacturer are listed in the QPL.

3.3 QPL system. The manufacturer shall establish and maintain a QPL system for parts covered by this specification. Requirements for this system are specified in MIL-STD-790 (all product levels) and MIL-STD-690 (ER part only). In addition, the manufacturer shall also establish a Statistical Process Control (SPC) and Part Per Million (PPM) system that meets the requirements as described in 3.3.1 and 3.3.2 respectively.

3.3.1 SPC system. As part of the overall MIL-STD-790 QPL system, the manufacturer shall establish a SPC system that meets the requirements of EIA-554-1. Typical manufacturing processes for application of SPC include film deposition, cap/lead attachment, laser trimming, encapsulation, and weld strength. In addition, the manufacturer shall demonstrate resistance temperature characteristic (RTC) control in the process.

3.3.2 PPM system. As part of the overall MIL-STD-790 QPL system, the manufacturer shall establish a PPM system for assessing the average outgoing quality of lots in accordance with EIA-554-1 and 4.6.4. Data exclusion, in accordance with EIA-554-1, may be used with approval of the qualifying activity. The PPM system shall identify the PPM rate at the end of each month and shall be based on a six month moving average. PPM and dc resistance shall be assessed for each style. Style reporting may include both non-ER and ER style combinations.

3.4 Material. Material shall be used which will enable the resistors to meet the performance requirements of this specification. Acceptance or approval of any constituent material shall not be construed as a guarantee of the acceptance of the finished product.

3.5 Interface and physical dimensions requirements. Resistors shall meet the interface, and physical dimensions specified (see 3.1). Each resistor shall consist of a film-type resistance element protected against exposure to humidity and temperature conditions by an enclosure or a coating of moisture-resistant, insulating material.

3.5.1 Aqueous-extract-conductivity. The manufacturer shall verify by certification that the aqueous-extract-conductivity, when determined as specified in 4.8.21 does not exceed the values shown below for the incoming materials for the part indicated:

Part	Maximum conductivity (siemens (mhos) per cm)
Core	0.5×10^{-6}

3.5.2 Films. Films shall be uniformly deposited.

3.5.3 Terminal leads. Terminal leads shall be of a solid conductor of the length and diameter specified (see 3.1). Manufacturers shall verify by certification that all leads conform to all requirements of type C of table II. The leads shall be capable of meeting the requirements of solderability (see 3.16 and figure 1). Terminal leads meeting requirements specified herein shall be considered solderable and weldable. At the option of the manufacturer, the terminals may be solder-coated or otherwise treated to meet the solderability requirements following the power conditioning test specified in 4.8.2.

3.5.3.1 Pure tin. The use of pure tin, as an underplate or final finish is prohibited both internally and externally. Tin content of resistor components and solder shall not exceed 97 percent, by mass. Tin shall be alloyed with a minimum of 3 percent lead, by mass (see 6.16).

3.5.3.2 Flux. Flux shall be of such a quality as to enable the resistors to meet all the requirements of this specification.

3.5.3.3 Solder dip (retinning) leads. The manufacturer (or his authorized category B or category C distributor) may solder dip/retin the leads of product supplied to this specification provided the solder dip process (see appendix) has been approved by the qualifying activity.

3.5.4 Weight. Resistors shall not exceed the maximum weight specified (see 3.1).

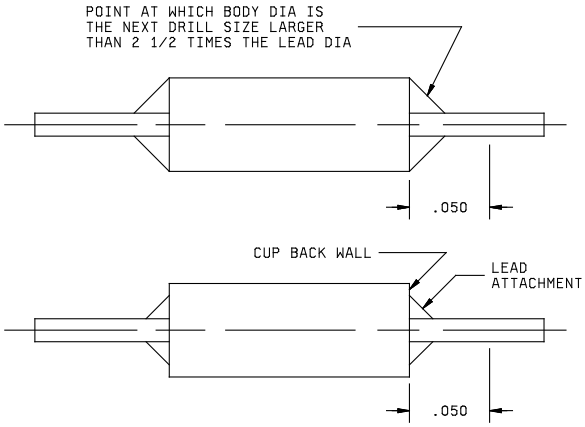

NOTE: Exposed copper or base metal due to lead attachment within .050 (1.27 mm) of the resistor body shall not be considered a reliability problem.

FIGURE 1. Solderability requirements.

3.6 Power rating. The resistors shall have a power rating as specified (see 3.1), based on continuous full-load operation at the ambient temperature of 70°C. This power rating is dependent on the ability of resistors to meet the life requirements specified in 3.24 (see 6.6). For temperatures in excess of those specified above, the load shall be derated as shown on figure 2.

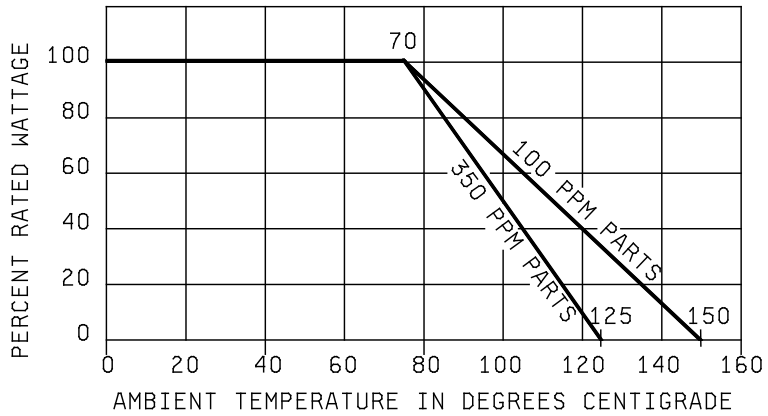

FIGURE 2. Derating curve for high ambient temperatures.

3.7 Voltage rating. Resistors shall have a rated direct current (dc) continuous working voltage or an approximate sine-wave root-mean-square (rms) alternating current (ac) continuous working voltage at commercial-line frequency and waveform corresponding to the power rating, as determined from the following formula:

$$E = \sqrt{(PR)}$$

Where:
E = Continuous rated dc or rms ac working voltage in volts.
P = Power rating (see 3.1).
R = Nominal resistance (see 3.1).

In no case shall the rated dc or rms ac continuous working voltage be greater than the applicable maximum value (see 3.1).

3.8 Power conditioning. When resistors are tested as specified in 4.8.2, there shall be no evidence of mechanical damage and the change in resistance shall not exceed ±(0.5 percent +0.05 ohm for 100 PPM) or ±(1 percent +0.05 ohm for 350 PPM).

3.9 DC resistance. When resistors are tested as specified in 4.8.3, the dc resistance shall be within the specified tolerance of the nominal resistance (see 1.2.1.5).

3.9.1 Resistance value deviations. All maximum deviations as specified in this section are to be considered absolute limits with the exception of the contact resistance adjustments.

3.10 Thermal shock. When resistors are tested as specified in 4.8.4, there shall be no evidence of mechanical damage, and the change in resistance shall not exceed ±(0.25 percent +0.05 ohm for 100 PPM) or ±(1.0 percent +0.05 ohm for 350 PPM).

3.11 Resistance temperature characteristic. When resistors are tested as specified in 4.8.5, the change in resistance at any temperature within the test temperature range, referred to an ambient temperature of 25°C, shall not exceed ±0.010 percent per degree Celsius (100 PPM/°C) or ±0.035 percent per degree Celsius (350 PPM/°C) as applicable.

3.12 Low temperature storage. When resistors are tested as specified in 4.8.6, there shall be no evidence of mechanical damage and the change in resistance between the initial and final measurements at 25°C ±5°C shall not exceed ±(0.25 percent +0.05 ohm for 100 PPM) or ±(0.5 percent +0.05 ohm for 350 PPM).

3.13 Low temperature operation. When resistors are tested as specified 4.8.7, they shall be no evidence of mechanical damage and the change in resistance between the initial and final measurements at 25°C ±5°C shall not exceed ±(0.25 percent +0.05 ohm for 100 PPM) or ±(0.5 percent +0.05 ohm for 350 PPM).

3.14 Short-time overload. When resistors are tested as specified in 4.8.8, there shall be no evidence of arcing, burning, or charring and the change in shall not exceed ±(0.5 percent +0.05 ohm for 100 PPM) or ±(1.0 percent +0.05 ohm for 350 PPM).

3.15 Terminal strength

3.15.1 Direct load. When resistors are tested as specified in 4.8.9, resistors shall withstand the specified load without mechanical damage and the change in resistance shall not exceed ±(0.25 percent +0.05 ohm for 100 PPM) or ±(0.5 percent +0.05 ohm for 350 PPM).

3.15.2 Twist. When resistors are tested as specified in 4.8.9.1, there shall be no evidence of breakage or other mechanical damage and the change in resistance shall not exceed ±(0.25 percent +0.05 ohm).

3.16 Solderability. When resistors are tested as specified in 4.8.10, they shall meet the criteria for wire lead terminal evaluation in the test method.

3.17 Resistance to solvents. When resistors are tested as specified in 4.8.11, there shall be no evidence of mechanical damage and the markings shall remain legible.

3.18 Dielectric withstanding voltage. When resistors are tested as specified in 4.8.12, there shall be no evidence of mechanical damage, arcing, or breakdown. The change in resistance shall not exceed ±(0.25 percent +0.05 ohm for 100 PPM and 350 PPM) The leakage current shall not exceed 1 milliampere at any time during the test.

3.19 Insulation resistance. When resistors are tested as specified in 4.8.13, the insulation resistance shall not be less than 1,000 megohms.

3.20 Resistance to soldering heat. When resistors are tested as specified in 4.8.14, there shall be no evidence of mechanical damage and the change in resistance shall not exceed ±(0.25 percent +0.05 ohm for 100 PPM) or ±(0.5 percent +0.05 ohm for 350 PPM).

3.21 Moisture resistance. When resistors are tested as specified in 4.8.15, there shall be no evidence of mechanical damage and the change in resistance between the initial and final measurements shall not exceed ±(1.0 percent +0.05 ohm for 100 PPM) or ±(5.0 percent +0.05 ohm for 350 PPM). The dielectric withstanding voltage shall be as specified in 3.18. The insulation resistance shall be not less than 100 megohms

3.22 Shock (specified pulse). When resistors are tested as specified in 4.8.16, there shall be no evidence of mechanical or electrical damage and the change in resistance shall not exceed ±(0.5 percent +0.05 ohm) following the vibration test of 3.23. There shall be no electrical discontinuity of 0.1 millisecond or greater duration during the test.

3.23 Vibration, high frequency. When resistors are tested as specified in 4.8.17, there shall be no evidence of mechanical or electrical damage and the change in resistance shall not exceed ±(0.5 percent +0.05 ohm) for 3.22 and 3.23 combined. There shall be no electrical discontinuity of 0.1 millisecond or greater duration during the test.

3.24 Life.

3.24.1 Qualification. When resistors are tested as specified in 4.8.18, there shall be no evidence of mechanical damage to the resistance element, coating, or enclosure. The change in resistance between the initial measurement and any of the succeeding measurements up to and including 2,000 hours shall not exceed ±2 percent.

3.24.2 FR level determination (extended FR test). When resistors are tested as specified in 4.8.18, the change in resistance between the initial measurement and any of the succeeding measurements up to and including 10,000 hours shall not exceed ±(4.0 percent +0.05 ohm). This single failure criterion shall be applicable to all measurements during the life test for purposes of determining FR level qualification (see 4.7.2).

3.25 High temperature exposure. When tested as specified in 4.8.19, there shall be no evidence of mechanical damage and the change in resistance shall not exceed ± (2.0 percent +0.05 ohm for 100 PPM) or ±(5.0 percent +0.05 ohm for 350 PPM).

3.26 Fungus. All external materials shall be nonnutrient to fungus growth or shall be suitably treated to retard fungus growth. The manufacturer shall verify by certification that all external materials are fungus resistant or shall test the resistors as specified in 4.8.20. There shall be no evidence of fungus growth on the external surfaces.

3.27 Marking.

3.27.1 Full marking. Resistors shall be marked with the PIN, JAN marking; date code, source code, and manufacturer's production lot code (see 6.2). Date and source code shall be in accordance with MIL-STD-1285. Marking shall remain legible at the end of all tests. The full marking shall be as shown in the following example:

12345 - Source code.
7333AJ - Date code, lot symbol, and JAN marking.
RLR32C - Style and terminal.
1002FM - Resistance, tolerance, and product level.

The date lot codes and lot symbols shall provide traceability through all production operations and shall represent a specific critical point consistently provided by the manufacturer. The common manufacturing record shall include the same date code as that on the parts covered by the record. Lot symbol shall be assigned as in accordance with MIL-STD-1285.

3.27.2 Minimum marking. When the physical size of the resistor precludes the marking of all the above in 3.27.1, the minimum marking required shall be as specified in the associated specification (see 3.1). In those cases where full marking requirements are not on the resistor body, the full marking shall be marked on the unit package (see section 5). Marking shall remain legible at the end of all tests.

* 3.27.3 JAN and J marking. The United States Government has adopted, and is exercising legitimate control over the certification marks "JAN" and "J", respectively, to indicate so marked or identified are manufactured to, and meet all the requirements of specifications. Accordingly, items acquired to, and meeting all of the criteria specified herein and in applicable specifications shall bear the certification mark "JAN" except that items too small to bear the certification mark "JAN" shall bear the letter "J". The "JAN" or "J" shall be placed immediately before the part number except that if such location would place a hardship on the manufacturer in connection with such marking, the "JAN" or "J" may be located on the first line above or below the part number. Items furnished under contracts or orders which either permit or require deviation from the conditions or requirements specified herein or in applicable specifications shall not bear "JAN" or "J". In the event item fails to meet the requirements of this specification and the applicable specification sheets or associated specifications, the manufacturer shall remove completely the military part number and the "JAN" or the "J" from the sample tested and also from all items represented by the sample. The "JAN" or "J" certification mark shall not be used on products acquired to contractor drawings or specifications. The United States Government has obtained Certificate of Registration Number 504,860 for the certification mark "JAN", and Registration Number 2,577,735 for the certification mark "J".

3.27.4 Supplying to higher product levels. A manufacturer may supply to all higher FR levels than that to which they are qualified. Parts qualified and marked to lower FR levels, with procuring agency approval, are substitutable for higher rate level parts, and shall not be remarked unless specified in the contract or purchase order (see 6.2 and table VII).

TABLE VII. Product level substitution.

Product level	Acceptable product level substitution
S (.001)	
R (.01)	S
P (0.1)	S, R
M (1.0)	S, R, P
C (non-ER)	S, R, P, M

3.27.5 Supplying lower resistance tolerances. Parts qualified and marked to more restrictive tolerance levels, with procuring agency approval, are substitutable for parts marked to higher tolerances levels and shall not be remarked unless specified in the contract or purchase order (see 6.2 and table VIII).

TABLE VIII. Resistance tolerance substitution.

Resistance tolerance	Acceptable resistance tolerance substitution
F	
G	F
J	F, G
K	F, G, J

* 3.28 Recycled, recovered, environmentally preferable, or biobased materials. Recycled, recovered, environmentally preferred, or biobased materials should be used to the maximum extent possible provided that the materials meets or exceeds the operational and maintenance requirements, and promotes economically advantageous life cycle costs.

3.29 Workmanship. Resistors shall be processed in such a manner as to be uniform in quality and shall be free any defects that will affect life, serviceability or appearance.

4. VERIFICATION

4.1 Classification of inspections. The inspection requirements specified herein are classified as follows:

a. Qualification inspection (see 4.4).

b. Verification of qualification (see 4.5).

c. Conformance inspection (see 4.6).

d. Periodic group C inspection (see 4.7).

4.2 Reliability and quality.

4.2.1 QPL system. The manufacturer shall establish and maintain a QPL system in accordance with 3.3. Evidence of such compliance is a prerequisite for qualification and retention of qualification.

4.2.2 SPC. A SPC program shall be establish and maintained in accordance with EIA-554-1. Evidence of such compliance shall be a prerequisite for qualification and verification of qualification.

4.3 Inspection conditions and precautions.

4.3.1 Inspection conditions. Unless otherwise specified herein, all inspections shall be performed in accordance with the test conditions specified in the "GENERAL REQUIREMENTS" OF MIL-STD-202.

4.3.2 Precautions. Adequate precautions shall be taken during inspection to prevent condensation of moisture on resistors, except during moisture resistance test. Precautions shall be taken to prevent damage by heat when soldering resistor leads to terminals.

4.4 Qualification inspection. Qualification inspection shall be performed at a laboratory acceptable to the Government (see 6.3).

4.4.1 Sample. The number of sample units comprising a sample of resistors to be submitted for qualification inspection shall be as specified in the appendix to this specification. The sample shall be taken at random from a production run and shall be produced with equipment and procedures normally used in production. With the exception of style RLR32, which shall be qualified separately (see 3.1).

4.4.2 Test routine. Sample units shall be subjected to the qualification inspection specified in table IX, in the order shown. All 294 sample units shall be subjected to the inspection of group I. The 294 sample units shall then be divided as specified in table IX for group III through VII inclusive, and subjected to the inspection for their particular group. Twelve additional samples shall be subjected to group II. An additional ten units shall be subjected to group VIII.

As an option, the manufacturer may develop a control procedure for minimum stabilization times required for RTC testing. This procedure shall detail specific time elements required to reach thermal and electrical stability for specific part designs. Documentation of this procedure and supporting results shall be submitted to the qualifying activity for approval. Upon approval by the qualifying activity, the manufacturer may use this procedure for minimum stabilization times for RTC testing.

4.4.3 Defectives. Defectives in excess of those allowed in table IX shall be cause for refusal to grant qualification approval.

TABLE IX. Qualification inspection.

Inspection	Number of sample units 1/	Requirement paragraph	Method paragraph	Number of defectives allowed 2/
Certification requirements 3/ Terminal leads Aqueous-extract-conductivity Fungus		 3.5.3 3.5.1 3.26	 4.8.21 4.8.20	
Group I 4/ Power conditioning DC resistance	All sample units 5/	3.8 3.9	4.8.2 4.8.3	Not applicable
Group IA 4/ Visual and mechanical inspection 6/	All sample unit 5/	3.1, 3.4, 3.5, 3.5.2 through 3.5.4 .inclusive, 3.27 and 3.28	4.8.1	0
Group II 7/ Solderability Resistance to solvents	12	3.16 3.17	4.8.10 4.8.11	0
Group III Thermal shock Resistance temperature characteristic Low temperature storage Low temperature operation Short-time overload Terminal strength	8/ 30 10 high 10 critical 10 low	 3.10 3.11 3.12 3.13 3.14 3.15	 4.8.4 4.8.5 4.8.6 4.8.7 4.8.8 4.8.9	1
Group IV Dielectric withstanding voltage Insulation resistance Thermal shock Resistance to soldering heat Moisture resistance	8/ 30 10 high 10 critical 10 low	 3.18 3.19 3.10 3.20 3.21	 4.8.12 4.8.13 4.8.4 4.8.14 4.8.15	
Group V Shock (specified pulse) Vibration, high frequency	8/ 30 10 high 10 critical 10 low	 3.22 3.23	 4.8.16 4.8.17	
Group VI Life	9/ 102 34 high 34 critical 34 low	3.24	4.8.18	1
Group VII High temperature exposure	9/ 102 34 high 34 critical 34 low	3.25	4.8.19	1
Group VIII 7/ Fungus	10	3.26	4.8.20	0

See footnotes on next page.

1/ See appendix for details.
2/ Failure of a single resistor in one or more tests of a group shall be charged as a single defective.
3/ The manufacturer shall verify by certification that these requirements have been met in fabricating resistors furnished to this specification. The fungus requirements are either by certification or performance (see group VIII).
4/ Tests shall not be performed if manufacturer presents certified data proving tests have been performed on the qualification sample units.
5/ All units shall meet group I requirements before being subjected to subsequent qualification test groups.
6/ Marking shall be considered defective only if illegible or missing. Marking shall remain legible at the end of all tests.
7/ Sample units for group II and group VIII shall not be subjected to group I.
8/ Where no critical value is specified, an additional 5 units of the highest value and 5 units of the lowest value shall be substituted.
9/ Where no critical value is specified, 51 units of the highest value and 51 units of the lowest value shall be substituted.

4.4.4 FR qualification. FR qualification shall be in accordance with the general and detail requirements of MIL-STD-690 and the following details:

a. Procedure I: Qualification at the initial FR level. Level M (1.0 percent of FRSP-60) shall apply. Sample units shall be subjected to the qualification inspection specified in group VI, table IX (see 4.4.2). Entire life test sample shall continue on test to 10,000 hours as specified in 4.8.18, upon completion of the 2,000 hour qualification.

b. Procedure II: Extension of qualification to lower FR levels. To extend qualification to the “R” (0.01 percent) and “S” (0.001 percent) FR level unit hours, two or more styles of similar construction may be combined.

c. Procedure III: Maintenance of FR level qualification. Maintenance period “A” of FRSP-10 shall apply. Regardless of the number of production lots produced during this period, the specified number of unit hours shall be accumulated to maintain qualification (see 4.7, periodic group C inspection).

4.5 Verification of qualification . Every 6 months, the manufacturer shall provide verification of qualification to the qualifying activity. Continued qualification is based on meeting the following requirements.

a. MIL-STD-790 program.

b. Design of resistor has not been modified.

c. Lot rejection for group A (subgroup 1 and subgroup 3) does not exceed 5 percent or one lot, whichever is greater.

d. Lot rejection for group B inspection does not exceed 5 percent or one lot, whichever is greater.

e. Periodic group C inspection.

f. FR levels.

g. PPM assessment (NOTE: Grouping of style is permitted).

h. Continued qualification to non-ER (“C”) shall be based on continued maintenance of qualification for the ER part (minimum “P” FR level maintained).

4.6 Conformance inspection.

4.6.1 Inspection of product for delivery.

4.6.1.1 Non-ER resistors. Inspection of product for delivery shall consist of the requirements in 4.6.3.1.

4.6.1.2 ER resistors. Inspection of product for delivery shall consist of group A and group B inspections. Group B inspection for preparation of delivery is not required when the qualifying activity has allowed group B testing to be performed annually (see table XIII).

4.6.2 Inspection and production lot.

4.6.2.1 Inspection lot. An inspection lot, as far as practicable, shall consist of all resistors of the same style, characteristic, and protective enclosure or coating and manufactured under essentially the same process and conditions during a manufacturing period of 1 month maximum. For purposes of lot formation all terminal types may be included in the same lot; however, all lead types which are combined shall have the same method of terminal attachment. All leads in the lot shall be represented in a similar proportion by samples selected for inspection. Non-ER and ER lots shall be kept separate.

4.6.2.2 Production lot. A production lot shall consist of all resistors of the same style, nominal resistance value, resistance tolerance, resistance temperature characteristic, and termination type. Manufacture of all parts in the lot shall have been started, processed, assembled, and tested as a group. Lot identity shall be maintained throughout the manufacturing cycle. Non-ER and ER lots shall be kept separate.

4.6.3 Group A inspection.

4.6.3.1 Non-ER resistors. The manufacturer shall establish and maintain an inspection system to verify resistors meet dc resistance, visual/mechanical, and solderability requirements. In-line or process control may be part of such a system. The inspection system shall also include criteria for lot rejection and corrective actions. The inspection system shall be verified under the overall MIL-STD-790 QPL system. NOTE: Since the non-ER (C level) is the ER design without the mandatory conformance inspection and FR level assessment, this product is still expected to meet the environmental qualification type requirements (e.g., moisture resistance, shock, vibration, etc.).

TABLE X. Group A inspection.

Inspection	Requirement paragraph	Method paragraph	Sampling procedure
Subgroup 1 1/ Power conditioning DC resistance 2/	 3.8 3.9	 4.8.2 4.8.3	 100 percent inspection
Subgroup 2 Visual inspection 3/	3.1, 3.4, 3.5.2 through, 3.5.3 inclusive, 3.27 and 3.28	4.8.1	See 4.6.3.2.3
Subgroup 3 Solderability 4/	3.16	4.8.10	See 4.6.3.2.4

1/ At the manufacturer's option, the determination of resistance change may be by any method which is within the accuracy requirements of this specification.

2/ Resistors shall meet this specified initial resistance tolerance. The resistance measurement made upon completion of the power conditioning test may be used if a measurement was made which can, without conversion, be directly related to nominal resistance value and tolerance.

3/ At the option of the manufacturer, marking inspection may be performed after group B inspection; however, if this is done, no defects shall be permitted. Marking shall remain legible at the end of all tests.

4/ The manufacturer may request the deletion of the subgroup 3 solderability test, provided an in-line or process control system for assessing and assuring the solderability of leads can be validated and approved by the qualifying activity. Deletion of the test does not relieve the manufacturer from meeting this test requirement in case of dispute. If the design, material, construction, or processing of the part is changed or if there are any quality problems, the qualifying activity may require resumption of the test.

4.6.3.2 ER resistors. Group A inspection shall consist of the inspections specified in table X, in the order shown.

4.6.3.2.1 Subgroup 1 tests. Subgroup 1 tests shall be performed on a production lot basis on 100 percent of the product supplied under this specification. Resistors that are out of resistance tolerance, or which experience a change in resistance greater than that permitted for the tests of this subgroup, shall be removed from the lot. Only lots having not more than 3 percent rejects on values up to 200 kilohms and 5 percent rejects on values of 200 kilohms to 3 megohms and 10 percent for values of 3 megohms and above, or one resistor, whichever is greater, due to exceeding the specified resistance change limit, as a result of subgroup 1 tests, shall be furnished on orders. Corrective action shall be taken on such values and new pieces furnished.

4.6.3.2.2 Manufacturer's production inspection. If the manufacturer performs tests equal to or more stringent than those specified in group A, subgroup 1, as the final step of this production process, group A, subgroup 1 inspection may be waived and the data resulting from the manufacturer's production tests may be used instead. Authority to waive the subgroup 1 inspection shall be granted by the qualifying activity only. The following criteria must be complied with:

a. Production tests are identical to or more stringent than those specified for subgroup 1 tests.

b. One hundred percent of the product supplied to these tests.

c. Failure criteria are identical to, or more stringent than, those specified for subgroup 1 tests.

d. Lot rejection criteria are identical to, or more stringent than, those specified for subgroup 1 tests.

e. Once approved, future changes require approval from the qualifying activity.

4.6.3.2.3 Subgroup 2 tests. The subgroup 2 tests shall be performed on an inspection lot basis for ER parts. A random sample of resistors shall be selected in accordance with table XI. In the event of one or more failures, the lot is rejected. The rejected lot may be rescreened and the defects removed and resubmitted to the table XI sample plan. If one or more defects are found in this second sample, the lot is rejected and shall not be supplied to this specification. (NOTE: This corrective action applies to the original quality defect found. If another defect type is found in the second sample, a rescreen for that defect is also permitted).

TABLE XI. Sampling plans for PPM categories.

Lot size	Sample size PPM	Sample size subgroup 2
1 - 13	100 percent	100 percent
14 - 125	100 percent	13
126 - 150	125	13
151 - 280	125	20
281 - 500	125	29
501 - 1,200	125	34
1,201 - 3,200	125	42
3,201 - 10,000	125	50
10,001 - 35,000	294	60
35,001 - 150,000	294	74
150,001 - 500,000	345	90
500,001 and over	435	102

4.6.3.2.4 Subgroup 3 (solderability). The subgroup 3 test shall be performed on an inspection lot basis for ER parts. A sample shall be selected from each lot in accordance with table XII. As an option, the manufacturer may use electrical rejects from the subgroup 1 test for all or part of the sample. If there are one or more defects, the lot is rejected. The manufacturer may use one of the following options for corrective action:

a. Each production lot that was used to form the failed inspection lot shall be individually submitted to the solderability test. Production lots that pass the solderability test are available for shipment. Production lots that fail can be submitted to the solder dip procedure in 4.6.3.2.4.b

TABLE XII. Solderability sampling plan.

Lot size	Sample size
1 to 3,200	5
3,201 to 10,000	8
10,001 to 35,000	13
35,001 and over	20

b. The failed lot is submitted to a 100 percent hot solder dip using an approved solder dip process in accordance with the appendix. A subsequent solderability test shall then be performed. If the lot passes, it is available for shipment; if the lot fails, the manufacturer may perform the hot solder dip one additional time. If the lot fails to pass, the lot is considered rejected and shall not be supplied to this specification.

4.6.3.2.4.1 Disposition of samples. The solderability test is considered a destructive test and samples submitted to the solderability test shall not be supplied on the contract.

4.6.4 PPM assessment (non-ER and ER). The manufacturer shall establish and maintain a system for assessing the average outgoing quality in PPM of lots supplied to this specification. This PPM assessment should be based on inspections performed on each inspection lot, verifying that resistors meet dc resistance, and tolerance requirements (i.e., PPM). For ER resistors, this inspection shall occur after the group A, subgroup 1, 100 percent screens have been completed. In the event of one or more failures, the lot is rejected.

4.6.4.1 Sampling plan. Minimum sample sizes for inspection lots shall be selected in accordance with table XI. For non-ER resistors, the sampling system and plan used for the group A inspection (see 4.6.3.1) may be the basis for assessing PPM.

4.6.4.2 Rejected lots. Any rejected lot shall be segregated from new lots and those lots that have passed PPM assessment. A rejected lot may be rescreened for the quality characteristics found defective in the sample and any defects removed. A new second sample shall be randomly selected. If one or more defects are found, this lot is rejected and shall not be supplied to this specification.

4.6.4.3 PPM calculations. PPM calculations shall be based on the accumulated results of the initial sample. Calculations and exclusion shall be in accordance with EIA-554-1 and qualifying activity approval. (NOTE: PPM calculations shall not be based on the second sample submission for a rejected lot as described 4.6.4.2).

4.6.5 Group B inspection. Group B inspection shall consist of the tests specified in table XIII, in the order shown. They shall be performed on sample lots that have been subjected to and have passed the group A inspection.

4.6.5.1 Sampling plan. All qualified styles may be grouped together in a single sample. This can be accomplished by proportion based on manufacturing percentages by style, equally divided by style or by establishing an alternating style sequence. In order to incorporate a style sampling grouping, a written description must be presented and approved by the qualifying activity. This plan must assure that the grouping only combines styles of the same design, encapsulation material and the same element type.

4.6.5.1.1 Subgroup 1. A sample of 13 parts shall then be randomly selected, if one or more defects are found, the lot shall be rescreened and defects removed. A new sample of 13 parts shall then be randomly selected, if one or more defects are found in the second sample, the lot shall be rejected and shall not be supplied to this specification.

4.6.5.1.2 Subgroup 2. A sample of 13 parts shall then be randomly selected, if one or more defects are found, the lot shall be rescreened and defects removed. A new sample of 13 parts shall then be randomly selected, if one or more defects are found in the second sample, the lot shall be rejected and shall not be supplied to this specification.

4.6.5.1.3 Subgroup 3. A sample of 8 parts shall then be randomly selected, if one or more defects are found, the lot shall be rescreened and defects removed. A new sample of 8 parts shall then be randomly selected, if one or more defects are found in the second sample, the lot shall be rejected and shall not be supplied to this specification.

4.6.5.2 Disposition of sample units. Sample units which have been subjected to group B, subgroup 1 and 2 inspections may be delivered on the acquisition document provided they are within resistance tolerance and meet requirements for visual and mechanical inspection. Sample units which have been subjected to subgroup 3 inspection shall not be supplied to this specification.

TABLE XIII. Group B inspection.

Test	Requirement paragraph	Method paragraph	Number of samples
Subgroup 1 1/ Visual and mechanical examination (when applicable)	3.1 and 3.27	4.8.1	13
Subgroup 2 2/ Resistance-temperature characteristic Short-time overload	3.11 3.14	4.8.5 4.8.8	13
Subgroup 3 2/ Resistance to solvents	3.17	4.8.11	8

1/ Only applicable when marking inspection is not performed in group A inspection. No defects shall be permitted. Marking shall remain legible at the end of all tests.

2/ If the manufacturer can demonstrate that this test has been performed for five consecutive times with zero failures, the frequency of this test, with the approval of the qualifying activity, can be performed on an annual basis. If the design, material, construction, or processing of the part is changed, or if there are any quality problems or failures, the qualifying activity may require resumption of the original test frequency.

4.7 Periodic group C inspection (ER only). Periodic inspection shall consist of group C inspection tests specified in table XIV, in the order shown. They shall be performed on sample units selected from lots that have passed the group A and group B inspections. Except where the results of these inspections show noncompliance with the applicable requirements (see 4.7.6), delivery of products which have passed group A and group B inspections shall not be delayed pending the results of these periodic inspections.

TABLE XIV. Group C inspection.

Inspection	Requirement paragraph	Method paragraph	Number of samples	Number of defectives
Monthly Subgroup 1 Life	3.24	4.8.18	See 4.7.2	
Monthly Subgroup 2 1/ Thermal shock Resistance to soldering heat Moisture resistance	 3.10 3.20 3.21	 4.8.4 4.8.14 4.8.15	10	1
Quarterly Subgroup 1 1/ Shock (specified pulse) Vibration, high frequency	 3.22 3.23	 4.8.16 4.8.17	10	1
Quarterly Subgroup 2 2/ Dielectric withstanding voltage Insulation resistance Low temperature storage Low temperature operation Terminal strength	 3.18 3.19 3.12 3.13 3.15	 4.8.12 4.8.13 4.8.6 4.8.7 4.8.9	10	
Semiannually 2/ High temperature exposure	3.25	4.8.19	102	1

1/ If the manufacturer can demonstrate that these tests have been performed for five consecutive times with zero failures, these tests, with the approval of the qualifying activity, can be deleted. The manufacturer however, shall perform these tests every three years after the deletion as part of long term design verification. If the design, material, construction, or processing of the part is changed, or if there are any problems, the qualifying activity may require resumption of the specified testing. Deletion of testing does not relieve the manufacturer from meeting the test requirement in case of dispute.

2/ If the manufacturer can demonstrate that this test has been performed for five consecutive times with zero failures, the frequency of this test, with the approval of the qualifying activity, can be performed on an annual basis. If the design, material, construction, or processing of the part is changed, or if there are any quality problems or failures, the qualifying activity may require resumption of the original test frequency.

4.7.1 Sampling plan. If more than 1,000 resistors of any style or style grouping are produced over the maintenance period, the group C tests shall be performed as specified. If the production rate is less than 1,000 resistors for any style or style grouping over the maintenance period then the monthly, quarterly, or semi-annual group C inspection may be postponed until at least 1,000 resistors of that style or style grouping are produced (except for the monthly life test). In any case, the monthly tests shall be performed at least once every 3 months. The quarterly tests shall be performed at least every 6 months and the semi-annual tests shall be performed at least once every year. This requirement is waived if the manufacturer has obtained a reduced inspection status through the qualifying activity.

All qualified styles may be grouped together in a single sample. This can be accomplished by proportion based on manufacturing percentages by style, equally divided by style, or by establishing an alternating style sequence. In order to incorporate a style sampling grouping, a written description must be presented and approved by the qualifying activity. This plan must assure that the grouping only combines styles of the same basic design, encapsulation material, and the same element type.

4.7.2 Monthly.

4.7.2.1 Subgroup 1. Test samples shall be selected for each inspection lot produced during a 1 month period. These samples shall be accumulated and placed on the life test as specified in 4.8.18, once a month, for the full 10,000 hour life test period. The test sample size shall be determined by the manufacturer so that the unit hours generated meets the maintenance of qualification requirements specified for the qualified FR level (see 4.4.4). In any event a minimum of 5 samples shall be selected from each lot. As far as practicable, the resistance values tested during a maintenance period shall be representative of all resistance decades produced during this period. The accumulated data shall be used for maintenance and extension of FR qualification.

4.7.2.2 Subgroup 2. Each month the tests specified in subgroup 2 shall be performed on sample units of each style and selected from lots produced during the previous month that have passed group A and group B inspection. For sample units without a critical value (see table XIV), ten sample units of the most populous, highest decade value produced during the period shall be inspected. One defective shall be allowed for each subgroup.

4.7.3 Quarterly. Every 3 month, ten sample units of each style and characteristic and of any resistance value shall be subjected to the tests specified in table XIV, in the order shown.

4.7.4 Semiannual. Sample units and tests shall be as specified in table XIV. The test sample shall include all styles allowed to combine for lot formation (see 4.6.2) as practicable. A complete separate sample shall be selected for each enclosure material.

4.7.5 Disposition of sample units. Sample units which have been subjected to group C inspection shall not be delivered on the contract or purchase order.

4.7.6 Noncompliance. If a sample fails to pass group C inspection, the manufacturer shall immediately notify the qualifying activity and the cognizant inspection activity of such failure and take corrective action on the materials or processes, or both, as warranted, and on all units of product which can be corrected and which were manufactured under essentially the same materials and processes and which are considered subject to the same failure. For ER level, acceptance and shipment of the product shall be discontinued until corrective action; acceptable to the qualifying activity has been taken. For C level, stop shipment may not be necessary depending on the nature of the failure. After the corrective action has been taken, group C inspection shall be repeated on additional sample units (all inspections, or the inspection which the original sample failed, at the option of the qualifying activity). Group A and group B inspections may be reinstituted; however, final acceptance and shipment shall be withheld until the group C inspection has shown that the corrective action was successful.

4.8 Methods of inspection.

4.8.1 Visual and mechanical inspection. Resistors shall be examined to verify that the materials, design, construction, physical dimensions, marking, and workmanship are in accordance with the applicable requirements (see 3.1, 3.4, 3.5 to 3.5.3 inclusive, and 3.27 to 3.28 inclusive). Visual aid for this requirement shall not exceed 10X.

4.8.2 Power conditioning (see 3.8).

4.8.2.1 Mounting.

4.8.2.1.1 Qualification inspection. Resistors shall be mounted horizontally in free space with no object closer than 3 inches to the resistor case, except the mounting base, which shall be no closer than 2 inches below the resistors. They shall be mounted in still air, with no circulation other than that caused by the heat of the resistors being operated. Test ambient temperature shall be 20°C to 45°C.

4.8.2.1.2 Conformance inspection. Resistors may be mounted in any position and allotted any size space as deemed necessary by the manufacturer. Forced air cooling may be used to maintain a test ambient temperature of 20°C to 45°C. The velocity of the forced air, if employed, shall not exceed 500 feet per minute. When forced air is employed, there shall be no direct impingement of the forced air supply upon the resistors.

4.8.2.2 Procedure. The load applied shall be 1.5X rated power for duration of 24 hours. The maximum voltage shall be as specified (see 3.1). The voltage applied may be ac or dc. DC resistance as specified in 4.8.3 shall be examined for evidence of arcing, burning, or charring.

4.8.3 DC resistance (see 3.9). Resistors shall be tested in accordance with method 303 of MIL-STD-202. The following details and exceptions shall apply:

a. Measuring apparatus: Different types of measuring test equipment (multimeters, bridges, or equivalent) are permitted to use on the initial and final readings of this test, provided the equipment is the same style, model, or if it can be shown that the performance of the equipment is equivalent to or better.

b. Measure energy for electronic test equipment: The measure energy applied to the unit under test shall not exceed 10 percent of the 25°C rated wattage times 1 second.

c. Test for bridges: Measurements of resistance shall be made using the test voltages specified in table XV. The test voltage chosen, whether it is the maximum or a lower voltage which would still provide the sensitivity required, shall be applied across the terminals of the resistor. This same voltage shall be used whenever a subsequent resistance measurement is made.

d. Temperature: The dc resistance test specified in group I of table IX shall be performed at 25°C ±2°C. For all other tests, unless otherwise specified herein, the temperature at which subsequent and final resistance measurements are made shall be within ±2°C of the temperature at which the first resistance measurement was made.

TABLE XV. DC resistance test voltages.

Resistance, nominal	Test potential
Ohms	Volts
4.3 to 9.1 inclusive	.0043 to .1 inclusive
10 to 91 inclusive	0.5 to 1 inclusive
100 to 910 inclusive	2.5 to 3 inclusive
1,000 to 9,100 inclusive	8 to 10 inclusive
10,000 to 91,000 inclusive	24 to 30 inclusive
0.1 megohms or higher	80 to 100 inclusive

4.8.4 Thermal shock (see 3.10). Resistors shall be tested in accordance with method 107 of MIL-STD-202. The following details and exceptions shall apply:

a. Special mounting:

(1) Qualification inspection: Resistors shall be mounted by means other than soldering.

(2) Conformance inspection: Resistors shall be mounted by means other than soldering or may be placed in trays. When trays are used, they must be designed to present a minimum of obstruction to the airstream. In no case shall the fixture prevent the specified ambient temperature from being achieved within 4 minutes after resistors are placed in chamber.

b. Measurements before cycling: DC resistance shall be measured as specified in 4.8.3.

c. Test condition letter:

(1) Qualification inspection: Test condition: F.

(2) Conformance inspection: Test condition B, except that the extreme low temperature shall be -55°C +0°C, -10°C. These extreme temperatures shall be achieved within 4 minutes after resistors are in the chamber.

d. Measurements after cycling: Within 3 hours after completion of the final cycle and as soon as the resistors stabilize at room temperature, dc resistance shall again be measured as specified in 4.8.3.

e. Inspection after test: Resistors shall be inspected for evidence of mechanical damage.

4.8.5 Resistance temperature characteristic (see 3.11). Resistors shall be tested in accordance with method 304 of MIL-STD-202. The following details and exception shall apply:

a. Test temperatures: As specified in table XVI.

TABLE XVI. Ambient temperature for resistance-temperature characteristics test.

Sequence	Temperature °C	
	Qualification inspection	Group B inspection 1/
	°C ±3	°C ±3
1	2/ 25	2/ 25
2	-15	-55
3	-55	2/ 25
4	2/ 25	3/ 150
5	65	
6	3/ 150	

1/ At the option of the manufacturer, the reverse sequence may be as follows:
1: 2/ 25 ± 3°C.
2: 3/ 150 ± 3°C.
3: 2/ 25 ± 3°C.
4: -55 ± 3°C.

2/ This temperature shall be considered the reference temperature for each of the succeeding temperatures.

3/ For ± 350 PPM parts, the maximum test temperature for the resistance-temperature coefficient shall be 125 ± 3°C (see 3.1).

4.8.6 Low temperature storage (see 3.12).

4.8.6.1 Mounting. Resistors shall be mounted in such a manner that there is a 1 inch of free air space around each resistor, and in such a position with respect to the air stream that the mounting offers substantially no obstruction to the flow of air across and around the resistors.

4.8.6.2 Procedure. DC resistance shall be measured as specified in 4.8.3. Within one hour after this measurement, the resistor shall be placed in a cold chamber at a temperature of -65°C ±2°C for a period of 24 hours ±4 hours. The resistors shall then be removed from the chamber and maintained at a temperature of 25°C ±5°C for a period of approximately 2 hours to 8 hours, the dc resistance shall again be measured as specified in 4.8.3. Resistors shall be examined for evidence of mechanical damage.

4.8.7 Low temperature operation (see 3.13).

4.8.7.1 Mounting. As specified in 4.8.4a.

4.8.7.2 Procedure. Following the final measurement of dc resistance as specified in 4.8.3, the resistors shall be placed in a cold chamber at room temperature. The temperature shall be gradually decreased to -55°C +0°C, -5°C within a period of not less than one and one-half hours or for more than 2 hours. At the option of the manufacturer, the resistors may be placed in the cold chamber when the chamber is already at the extreme low temperature. After one hour of stabilization at this temperature, the full rated continuous working voltage (see 3.7) shall be applied for 45 minutes. The resistors may be loaded individually or in parallel. Fifteen minutes +5 minutes, -0 minutes after removal of voltage, the temperature in the chamber shall be increased to room temperature within a period of not more than 8 hours. The resistors shall be removed from the chamber, and maintained at a temperature of 25°C ±5°C for a period not to exceed 24 hours. The dc resistance shall be measured as specified in 4.8.3. Resistors shall then be examined for evidence of mechanical damage.

4.8.8 Short-time overload (see 3.14).

4.8.8.1 Mounting.

4.8.8.1.1 Qualification inspection. Resistors shall be mounted horizontally in free space with no object closer than 3 inches to the resistor case, except the mounting base, which shall not be closer than 2 inches below the resistors. They shall be mounted in still air, with no circulation other than that caused by the heat of the resistors being operated.

4.8.8.1.2 Conformance inspection. Resistors may be mounted in any position and allotted any size space as deemed necessary by the manufacturer. Forced air cooling may be used to maintain a test ambient temperature of 25°C ±10°C. The velocity of the forced air, if employed, shall not exceed 500 feet per minute. When forced air is employed, there shall be no direct impingement of the forced air supply upon the resistors.

4.8.8.2 Procedure. DC resistance shall be measured as specified in 4.8.3. Following this measurement, a potential of 2.5 times the rated continuous working voltage, but not to exceed twice the maximum voltage (see 3.1), shall be applied for 5 seconds to the resistor terminals. Thirty minutes +5 minutes, -0 minutes after the removal of the test potential, the dc resistance shall be measured as specified in 4.8.3.

4.8.9 Terminal strength (see 3.15). Resistors shall be tested in accordance with method 211 of MIL-STD-202. The following details and exceptions shall apply:

a. Test condition: A (pull test).

b. Measurement after test: DC resistance shall be measured as specified in 4.8.3.

c. The resistors shall be clamped by one terminal lead.

d. The applied load shall be 5 pounds for styles RLR07, RLR20, and RLR32. For style RLR05 the applied load shall be 2 pounds

e. Examination after test: DC resistance shall be measured as specified in 4.8.3. Resistors shall be examined for evidence of mechanical damage (see 3.15.1).

4.8.9.1 Twist test. Resistors shall be tested in accordance with method 211 of MIL-STD-202. The following details shall apply:

a. Test condition: D.

b. Test to be performed following tests specified in 4.8.9.

c. Following the test dc resistance shall be measured as specified in 4.8.3, and the resistors shall be examined for evidence of breakage and other mechanical damage (see 3.15.2).

4.8.10 Solderability (see 3.16). Resistors shall be tested in accordance with method 208 of MIL-STD-202.

4.8.11 Resistance to solvent (see 3.17). Resistors shall be tested in accordance with method 215 of MIL-STD-202. The following details shall apply:

a. The marked portion of the resistor body shall be brushed.

b. The number of sample units shall be as specified in table IX and table XIII, as applicable.

c. Resistors shall be examined for mechanical damage and legibility of markings.

4.8.12 Dielectric withstanding voltage (see 3.18).

4.8.12.1 Atmospheric pressure. Resistors shall be tested in accordance with method 301 of MIL-STD-202. The following details and exceptions shall apply:

a. Special preparations: Resistors shall be placed in a conductive material which will conform to the resistor surface so that between 90 and 100 percent of the outer periphery is contacted. The conductive material shall be centered on the resistor body. Care should be taken that any part of the resistor lead is as far away from the conductive material as possible (see figure 3).

b. Initial measurement: DC resistance shall be measured as specified in 4.8.3.

c. Magnitude of test voltage: see 3.1.

d. Nature of potential: An alternating current (ac) supply at commercial line frequency (not more than 100 cycles per second) and waveform.

e. Duration of application of test voltage: 60 seconds.

f. Rate of application of test voltage: 100 volts per second.

g. Points of application of test voltage: Between the resistor terminals connected together and the conductive material (No longer mounted in a V-block).

h. Measurements after test: DC resistance shall be measured as specified in 4.8.3.

i. Examinations after test: Resistor shall be examined for evidence of mechanical damage, arcing, and breakdown.

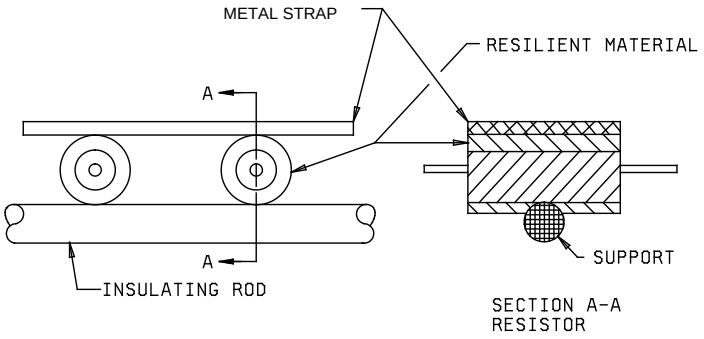

FIGURE 3. Resistor-contacting assembly for dielectric strength.

4.8.12.2 Barometric pressure. Resistors shall be tested in accordance with method 105 of MIL-STD-202. The following details and exceptions shall apply:

a. Method of mounting: As specified in 4.8.12.1a.

b. Initial measurement: DC resistance shall be measured as specified in 4.8.3.

c. Test condition: D.

d. Test voltages during subjection to reduced pressure: See 3.1.

e. Nature of potential: As specified in 4.8.12.1d.

f. Duration of application: 60 seconds.

g. Rate of applicable: 100 volts per second.

h. Points of application of test voltage: As specified in 4.8.12.1g.

i. Measurement after test: DC resistance shall be measured as specified in 4.8.3.

j. Examinations after test: As specified in 4.8.12.1i.

4.8.13 Insulation resistance (see 3.19). Resistors shall be tested in accordance with method 302 of MIL-STD-202. The following details and exceptions shall apply:

a. Special preparation: As specified in 4.8.15a.

b. Test condition: A or B, whichever is more practicable for styles RLR07, RLR20, and RLR32. For style RLR05, test condition A (100 volts) shall be used.

c. Points of measurement: Between the resistor terminals connected together and the mounting strap.

4.8.14 Resistance to soldering heat (see 3.20). Resistors shall be tested in accordance with method 210 of MIL-STD-202. The following details shall apply:

a. Measurement before test: DC resistance shall be measured as specified in 4.8.3.

b. Special preparation of the specimen: Both leads shall be dipped in type A flux in accordance with J-STD-004, and then dipped into solder, both for 5 seconds ±.5 second. The bath shall be maintained at 260°C ±5°C. The parts shall be immersed to within .075 inch ±.025 inch of the body.

c. Test condition: Test condition C, a board with a maximum area or 9 square inches shall be used and the leads shall not be cut.

d. Measurement after test: After completion of the cleaning process and following a minimum 3-hour cooling period, the dc resistance shall be measured as specified in 4.8.3.

e. Examination after test: Resistors shall be examined for evidence of mechanical damage.

4.8.15 Moisture resistance (see 3.21). Resistors shall be tested in accordance with method 106 of MIL-STD-202. The following details and exceptions shall apply:

a. Mounting: Resistors shall be soldered by their leads to standoff insulators on a panel so that there will be at least 1 inch of free air space around each resistor[1]. The spacing of the mounts shall be such that the length of each resistor lead is 0.375 inch ±0.063 inch when measured from the edge of the supporting terminal to the resistor body. Resistor leads may be formed, if necessary, so as not to compromise the seal of the resistor. In addition, one-half of the sample units shall be covered with a V-shape metal strap whose width is equal to the length of the resistor body as indicated on figure 4. The strap shall be made of a corrosion-resistant metal and shall be kept in contact with the resistor body by supporting the body as indicated on figure 4, with a nonconducting, noncorrosive support whose width is less than that of the body and which shall not act as a moisture trap. The mounting straps may be individual for each resistor or continuous for all resistors. These resistors with strapping shall be subjected to the polarization voltage.

b. Initial measurement: Following thermal stabilization (within 30 minutes after resistors have been removed from drying oven), dc resistance shall be measured as specified in 4.8.3.

c. Polarization and loading voltage:

(1) Polarization voltage: During steps 1 to 6 inclusive, a 100 volt dc potential shall be applied only to resistors which have a polarizing strap. This potential shall be applied with the positive lead connected to the resistor terminals tied together, and the negative lead connected to the polarizing strap.

(2) Loading voltage: During the first 2 hours of steps 1 and 4, a dc test potential equivalent to 100 percent rated dc continuous working voltage shall be applied to the resistors which do not have the polarizing strap specified in 4.8.15a.

1 Standoff insulators of polytetrafluoroethylene are preferred for use with resistors of high resistance values.

* d. Subcycle: Step 7a shall be performed during any five of the first nine cycles. Step 7b shall not be applicable. .

* e. Final measurements: Upon completion of step 6 of the final cycle, the resistors shall be held at the high humidity condition and a temperature of 25°C ±2°C for a period of 1 hour 30 minutes to 3 hours 30 minutes. Resistors shall be removed from the chamber and within 60 minutes, the dc resistance, dielectric withstanding voltage, and insulation resistance shall be measured in that order, as specified in 4.8.3, 4.8.12.1, and 4.8.13, respectively. Sample units shall not be subjected to forced air drying prior to or during these final measurements

f. Examination after test: Resistors shall be examined for evidence of mechanical damage.

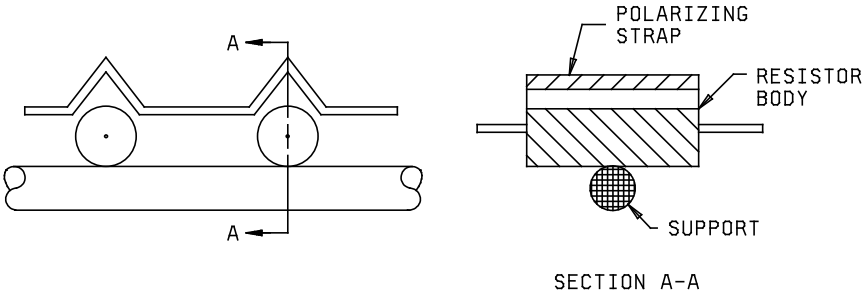

FIGURE 4. Mounting straps for moisture-resistance test for polarized units only.

4.8.16 Shock (specified pulse)(see 3.22). Resistors shall be tested in accordance with method 213 of MIL-STD-202. The following details and exceptions shall apply:

a. Special mounting means: Resistors shall be mounted on appropriate jig fixtures with their bodies restrained from movement and their leads supported at a distance of 0.25 inch from the resistor body. These fixtures shall be constructed in a manner to insure that the points of the resistor mounting supports will have the same motion as the shock table. Test leads used during this test shall be no larger than AWG size 22 stranded wire, so that the influence of the test lead on the resistor will be held to a minimum. The test lead length shall be no longer than necessary. In all cases, the resistors shall be mounted in relation to the test equipment in such a manner that the stress applied is in the direction which would be considered most detrimental.

b. Measurements before shock: DC resistance shall be measured as specified in 4.8.3.

c. Test condition: I.

d. Number and direction of applied shocks: The resistors shall be subjected to a total of ten shocks in each of two mutually perpendicular planes, one perpendicular and the other parallel to the longitudinal axis of the resistor.

e. Measurements during shock: Each resistor shall be monitored to determine electrical discontinuity, by a method which shall at least be sensitive enough to monitor or register, automatically, any electrical discontinuity of 0.1 millisecond or greater duration.

f. Examination after test: Resistors shall be examined for evidence of mechanical and electrical damage.

4.8.17 Vibration, high frequency (see 3.23). Resistors shall be tested in accordance with method 204 of MIL-STD-202. The following details and exceptions shall apply:

a. Mounting of specimens: Resistors shall be mounted on appropriate jig fixtures and supported by their leads at a distance of 0.25 inch from the resistor body. These fixtures shall be constructed in a manner to insure that the points of the resistor mounting supports will have the same motion as the vibration test table. The fixtures shall also be of a construction that will preclude any resonance in the fixture when subjected to vibration within the test frequency range, and the fixture shall be monitored for these features on the vibration table. Test leads used during this test shall be no larger than AWG size 22 stranded wire, so that the influence of the test lead on the resistor will be held to a minimum. The test lead length shall be no greater than is absolutely necessary. A shielded cable which may be necessary because of the field surrounding the vibration table shall be clamped to the resistor mounting jig.

b. Initial measurement: Use initial measurement of 4.8.16. (Requirement is 4.8.16 and 4.8.17 combined).

c. Test condition: D.

d. Direction of motion: In each of two mutually perpendicular directions, one perpendicular and the other parallel to the longitudinal axis of the resistor. Six hours in each direction for a total of 12 hours.

e. Measurements during test: Each resistor shall be monitored to determine electrical discontinuity, by a method which shall at least be sensitive enough to monitor or register, automatically, any electrical discontinuity of 0.1 millisecond or greater duration.

f. Measurements after vibration: DC resistance shall be measured as specified in 4.8.3.

g. Examination after test: Resistors shall be examined for evidence of mechanical and electrical damage.

4.8.18 Life (see 3.24). Resistors shall be tested in accordance with method 108 of MIL-STD-202. The following details and exceptions shall apply:

a. Method of mounting: Resistors shall be mounted on lightweight terminals. The effective length of each lead shall be 0.5 inch minimum. Resistors shall be soldered to the terminals. Resistors shall be so arranged that the temperature of any one resistor shall not appreciably influence the temperature of any other resistor.

b. Test temperature: 70°C +15°C, -5°C.

c. Initial measurement: Measurements may be made inside or outside the chamber.

(1) Inside the chamber: When measurements are to be made inside the chamber, the initial dc resistance shall be measured after mounting at the applicable test temperature after temperature stabilization and within 8 hours of exposure of the resistors to the test temperature. This initial measurement shall be used as the reference temperature for all subsequent measurements under the same conditions.

(2) Outside the chamber: When measurements are to be made outside the chamber, the initial dc resistance shall be measured after mounting at room temperature. This initial measurement shall be used as the reference temperature for all subsequent measurements under the same conditions.

d. Operating conditions: Rated dc continuous working voltage (RCWV), or filtered or nonfiltered full-wave rectified ac voltage shall be applied intermittently, one and one-half hours "on" and one-half hours "off" for the applicable number of hours (see 4.8.18f) and at the applicable test temperature. “On time” shall be three-fourths of the total elapsed time. Voltage shall be maintained within 5 percent of RCWV.

e. Test condition: 2,000 hours elapsed time for qualification with all samples continued to 10,000 hours; 10,000 hours for FR level inspection of group C.

f. Measurements during test:

(1) Qualification inspection: DC resistance shall be measured at the end of the 0.5 hour "off" periods after 250 hours +72 hours, -24 hours; 500 hours +72 hours, -24 hours; 1,000 hours +72 hours, -24 hours; and 2,000 hours +96 hours, -24 hours have elapsed.

(2) Extended life testing: DC resistance shall be measured at the end of the one-half hour "off" periods after 250 hours +72 hours, -24 hours; 500 hours +72 hours, -24 hours; 1,000 hours +72 hours, -24 hours; 2,000 hours +96 hours, -24 hours, and every 2,000 hours +96 hours, -24 hours thereafter, until the required 10,000 +120, -0 hours, have elapsed. Measurements shall be made as near as possible to the specified time but may be adjusted so that measurements need not be made during other than normal working days.

(3). Measurements outside of chamber: When measurements are made outside the chamber, resistors shall be outside of the chamber for a minimum of 45 minutes and stabilized at room temperature before measurement.

g. Examination after test: Resistors shall be examined for evidence of mechanical damage.

4.8.19 High temperature exposure (see 3.25).

a. Mounting: Resistors shall be mounted by means other than soldering or may be placed in trays. When trays are used, they must be designed to present a minimum construction to the airstream; so that the specified ambient temperature can be achieved throughout the chamber.

b. Initial measurements: DC resistors shall be measured as specified in 4.8.3 at room ambient conditions.

c. Procedure: Following initial resistance measurements resistors shall placed in a chamber maintained at 150°C, +15°C, -0°C for 100 PPM (125°C +15°C, -0°C for resistance temperature coefficient of 350 PPM) (see 3.1) for a period of 2,000 hours +72 hours, -0 hours with no load.

d. Measurements during test: At 250 hours +48 hours, -0 hours, resistor shall be removed from chamber and permitted to stabilize at room temperature and within 6 hours after removal, the dc resistance shall be measured as specified in 4.8.3. Resistors shall be examined for evidence of mechanical damage.

e. Final measurements: After removal from the test chamber resistors shall be permitted to stabilize at room ambient temperatures and within 6 hours after removal, the dc resistance shall be measured as specified in 4.8.3. Resistors shall be examined for evidence of mechanical damage.

4.8.20 Fungus (see 3.26). Resistors shall be tested in accordance with method 508 of MIL-STD-810.

4.8.21 Aqueous-extract-conductivity test procedure (see 3.5.1).

4.8.21.1 Outline of method. The sample is extracted with hot water. The conductivity of electrolytic surface contaminants is measures with a conductivity bridge or resistance indicator and compared with deionized or distilled water blank.

4.8.21.2 Apparatus.

4.8.21.2.1 Conductivity bridge. A conductivity bridge or resistance indicator shall be used with the capability of measuring resistance up to at least 2 megohms. Within the range of 0.3 megohms to 1 megohm inclusive, the accuracy of adjustment shall be within 5 percent.

4.8.21.2.2 Constant temperature bath. A water bath maintained at 25°C ±0.5°C. If the conductivity bridge as described in 4.8.21.2.1 is cable of automatic temperature compensation to within ±0.5°C, the water bath temperature shall be 25°C ±0.5°C.

4.8.21.2.3. Beakers. Two acid and alkali-resistant glass, 125 milliliter (ml), tall form beakers or any beakers of such dimension that the dip-type cell is immersed in 100 ml of liquid contained therein, the electrodes are fully covered.

4.8.21.2.4 Thermometer. A thermometer having a range of -5°C to +50°C inclusive, graduated in 0.1°C intervals (for constant temperature bath). Accuracy of thermometer shall be equal to or better than one-half of the graduations.

4.8.21.2.5 Conductivity cell. Either a platinum or gold electrode dip cell may be used. The dip-type cell must be securely mounted and adequately protected so that their relative positions shall not be affected by handling or moderate jarring.

Platinum cells. The area of each electrode shall not be less than 2 square centimeters (cm^2). The cell shall be so constructed that the electrodes shall be completely immersed upon dipping the cell into the liquid medium. The cell constant shall be 0.1 reciprocal cm. The electrodes shall be platinized (in accordance with 4.8.21.2.5.1) if the measurements are made at low frequency (60 cycles). At a frequency of 1,000 cycles, this precaution is unnecessary.

4.8.21.2.5.1 Preparation and calibration of conductivity cell (not applicable to gold cells). If unplatinized, clean a new cell with warm chromic-acid solution, wash thoroughly with distilled water, and rinse with alcohol and ether. If the electrodes are already platinized, omit the chromic-acid wash. To platinize the electrodes, immerse the cell in a solution of 310 grams (g) of chloroplatinic acid and 0.010 g of lead acetate in 100 ml of distilled water. Electrolyze, using a current density of 30mA per cm^2 for 8 minutes, reversing the current every 2 minutes. Wash the electrodes thoroughly with distilled water. To test for completeness of removal of electrolyte, immerse the cell in 50 ml of distilled water and measure the resistance initially and at the end of 10 minutes; if a decrease in resistance occurs, repeat the washing. Keep the cell immersed in distilled water when not in use. To determine the cell constant, place a beaker containing 0.01 molar potassium-chloride solution in the constant temperature bath maintained at 25°C ±0.5°C. After thermal equilibrium is established, measure the resistance of this solution. The cell constant "K" may be calculated as follows:

Where: K = C X R per cm.
R = resistance in ohms.
C = conductivity of the potassium-chloride solution.
(The value for C at 25°C is 1.41×10^{-3} ohms per cm.)

4.8.21.2.5.2 Calibration of gold conductivity cell (not applicable to platinum cells). Dip the conductivity cell into a 10 μmho per cm conductivity standard solution (potassium chloride type). Adjust calibration knob on the conductivity bridge to 10 μmho.

4.8.21.3 Reagents.

4.8.21.3.1 Reagent water. Either distilled or deionized water may be used. The water must meet type II reagent water in accordance with ASTM D1193 (minimum of 1 megohm - cm).

4.8.21.3.2 Potassium-chloride solution. Prepare a 0.01 molar solution with reagent grade potassium chloride which has been fried for 2 hours at 100°C. After cooling, dissolve 0.7455 g of the dried salt in distilled water and make up to 1 liter in a volumetric flask at 20°C.

4.8.21.4 Procedure.

a. Place an unbroken sample or samples with a minimum surface area of 50 square inches in a suitable breaker or flask so that a maximum of 100 ml of boiling distilled or deionized water will completely cover the sample. Prepare a blank, using a like amount of distilled or deionized water in the equivalent beaker, and with both sample and blank proceed as follows: Heat the content of the beaker to 90°C minimum for 5 minutes ±0.5 minutes. Care should be taken in this operation so that the sample remains unbroken.

b . Place the beakers in a water bath as described in 4.8.21.2.2 at 25°C.

c. As soon as thermal equilibrium is established, place the dip-type cell in the extract solution, making certain that the electrodes are completely immersed. Measure the resistance on the most sensitive scale of the bridge. Move the cell up and down in the solution several times and repeat the measurement until successive readings are constant. Before each measurement, rinse the cell thoroughly in distilled or deionized water and gently shake off any water on the surface.

e. Correct the conductivity of the extract solution for the blank using the following equation:

$$C_f = \{(C_{fs} - C_{is}) - (C_{fb} - C_{ib})\} * (5*V)/(100*I)$$

Where:

C_f = Conductivity of the sample tested.
C_{fs} = Final conductivity of the sample being tested.
C_{is} = Initial conductivity of the sample being tested.
C_{fb} = Final conductivity of the blank solution.
C_{ib} = Initial conductivity of the blank solution.
V = Actual volume of water used for extraction procedure (ml).
I = Actual surface area of sample tested (in^2).

4.8.21.5 Report. The conductivity shall be reported in microsiemens per cm for a sample having a minimum of 50 square inches surfaces area.

5. PACKAGING

5.1 Packaging. For acquisition purposes, the packaging requirements shall be as specified in the contract or order (see 6.2). When packaging of materiel is to be performed by DoD or in-house contractor personnel, these personnel need to contact the responsible packaging activity to ascertain packaging requirements. Packaging requirements are maintained by the Inventory Control Point's packaging activities within the Military Service or Defense Agency, or within the military service's system commands. Packaging data retrieval is available from the managing Military Department's or Defense Agency's automated packaging files, CD-ROM products, or by contacting the responsible packaging activity.

6. NOTES

(This section contains information of a general or explanatory nature that may be helpful, but is not mandatory).

6.1 Intended use. These film resistors described herein are intended to be used in electronic circuits where semiprecision characteristics and small sizes are required. These resistors are unique due to the fact that they must be able to operate satisfactorily in military systems that have passed tests as described in MIL-STD-202. Commercial components are not designed to withstand these military environmental conditions.

6.2 Acquisition requirements. Acquisition documents should specify the following:

a. Title, number, date of this specification, the applicable associated specification, and the complete PIN (see 1.2.1).

* b. Unless otherwise specified (see 2.1), the versions of the individual documents referenced will be those in effect on the date of release of the solicitation.

c. Packaging requirements (see 5.1).

d. Allowable substitution (see 3.27.4 and 3.27.5).

e. Lead length requirements for tape and reel packaging (see 3.1).

* 6.3 Qualification. With respect to products requiring qualification, awards will be made only for products which are, at the time of award or contract, qualified for inclusion in the Qualified Products List QPL-39017 whether or not such products have actually been so listed by that date. The attention of the contractors is called to these requirements, and manufacturers are urged to arrange to have the products that they propose to offer to the Federal Government tested for qualification in order that they may be eligible to be awarded contracts or orders for the products covered by this specification. The activity responsible for the qualified products list is the US Army Communications - Electronics RDEC, ATTN: RDER-PRO, Aberdeen Proving Ground, BLDG. 6010 K-130, C2/CNT East, MD 21005; however, information pertaining to qualification of products may be obtained from the DLA Land and Maritime, ATTN: VQP, Post Office Box 3990, Columbus, Ohio 43218-3990. An online listing of products qualified to this specification may be found in the Qualified Products Database (QPD) at https://assist.dla.mil.

6.4 Resistance tolerance. Designers should bear in mind that operation of these resistors under the ambient conditions for which military equipment is designed, may cause permanent or temporary changes in resistance sufficient to throw them out of their initial tolerance. In particular, operation at extreme temperatures may cause relatively large temporary changes in resistance.

6.4.1 Resistance tolerance by characteristic. The resistance tolerance available for resistance temperature characteristics 100 PPM and 350 PPM is 1 percent, 2 percent and 2 percent, 5 percents and 10 percent, respectively (see 3.1).

6.5 Maximum voltage. The maximum continuous working voltage specified for each of the styles (see 3.1) should in no case be exceeded, regardless of the theoretically calculated rated voltage (see 3.7).

6.6 Derating. The intention of this specification is to cover resistors capable of full-load operation at any ambient temperature up to 70°C. However, if it is desired to operate these resistors at ambient temperatures greater than 70°C, the resistors should be derated in accordance with figure 2. The slope of the derating curve is estimated and is not completely substantiated by test data; therefore it should be used only as an application guide.

6.7 Shelf life. Resistors are not expected to change in resistance more than 0.2 percent (average) per year under normal storage conditions (25°C ±10°C with a relative humidity not exceeding 90 percent).

6.8 Flammability. It should be note that this specification contains no requirements concerning the flammability of the material used in the construction of the resistor. Users should take this into consideration when a particular application involves this requirement.

6.9 Supersession data. The style of this specification supersedes other styles in accordance with table XVII.

TABLE XVII. Styles.

Styles in MIL-PRF-39017G	Supersedes styles in MIL-R-39017C	Supersedes styles in MIL-R-38101	Supersedes styles MIL-PRF-22684 (USAF)
RLR07	39017/1 (RLR07)	38101/21	(RL07-TX) 22684/5 (USAF)
RLR20	39017/2 (RLR20)	38101/22	(RL20-TX) 22684/6 (USAF)
RLR32 1/	39017/3 (RLR32)	38101/23	(RL32-TX) 22684/7 (USAF)

1/ FR level “M” is the equivalent level for supersession of the referenced MIL-PRF-22684 (USAF) style.

* 6.9.1 Supersession data. Resistor style RL42-TX in accordance with MIL-PRF-22684/8 and DLA Land and Maritime drawing 97004 are substitute for resistor style RLR42 and RLR62 in MIL-R-39017/4 and MIL-PRF-39017/6, which have been canceled.

6.9.2 Resistance. Resistors specified with a 2 percent resistance tolerance by this specification supersede and are interchangeable with resistors of the same resistance value, tolerance, style, and performance characteristics specified in MIL-R-39017B as listed in table XVIII.

TABLE XVIII. Designation of resistance values.

Resistance designations		Resistance
MIL-PRF-39017D	MIL-R-39017B	
10R0 to 91R0 inclusive	100 to 910 inclusive	10.0 to 91.0
1000 to 9100 inclusive	101 to 911 inclusive	100 to 910
1001 to 9101 inclusive	102 to 912 inclusive	1,000 to 9,100
1002 to 9102 inclusive	103 to 913 inclusive	10,000 to 91,000
1003 to 9103 inclusive	104 to 914 inclusive	0.1 megohm to .91 megohm
1004 to 9104 inclusive	105 to 915 inclusive	1.0 megohm to 9.1 megohms

6.9.3 Resistance tolerance. Resistance tolerance “G” (2.0 percent) supersedes and is a substitute for resistance tolerance “J” (5.0 percent).

6.9.4 Three digit resistance value. The three digit resistance designator that appeared in MIL-R-39017D is inactive for new design and has been removed from section 1 of this document (see table XVIII).

6.10 Terminal supersession. Terminal type “C” of MIL-R-39017C supersedes terminal types ”S” and “D” of MIL-R-39017. Type “C” also supersedes the weldable lead specified in MIL-R-22684/5 (USAF) through MIL-PRF-22684/8 (USAF).

6.11 Selection and use information. Equipment designers should refer to MIL-HDBK-199, "Resistors, Selection and Use of", for a selection of standard resistor types and values for new equipment design. All applications and use information concerning these resistors are also provided in MIL-HDBK-199.

6.12 MIL-PRF-22684 substitution data. Resistors of this specification, regardless of their FR designation, are substitutes for resistors of the same resistance value, and tolerance, specified in the inactive for new design specification sheets of MIL-PRF-22684 as follows:

Substitute specification	Detail specification inactive for new design
MIL-PRF-39017/1	MIL-R-22684/1
MIL-PRF-39017/2	MIL-R-22684/2
MIL-PRF-39017/3	MIL-R-22684/3
MIL-PRF-22684/8	MIL-R-39017/4 or MIL-PRF-39017/6 (cancel)

* 6.13 MIL-R-11 and MIL-R-39008 substitution data. Resistors of these specifications, regardless of their FR designation, are suggested replacements for resistors of the same resistance value, tolerance, specified in the cancel specifications MIL-R-11 and MIL-R-39008 (see 6.13.2) are as follows:

Substitute specification	Replacement specification sheet	Replacement specification sheet
MIL-PRF-39017/1 or DLA Land and Maritime drawing 99011	MIL-R-11/8	MIL-R-39008/1
MIL-PRF-39017/2 or DLA Land and Maritime drawing 98020	MIL-R-11/3	MIL-R-39008/2
MIL-PRF-39017/3 or DLA Land and Maritime drawing 98021	MIL-R-11/6	MIL-R-39008/3
MIL-PRF-39017/5 or DLA Land and Maritime drawing 98022	MIL-R-11/11	MIL-R-39008/4
MIL-PRF-22684/8 or DLA Land and Maritime drawing 97004	MIL-R-11/7	MIL-R-39008/5

6.13.1 Circuit reactance. If circuit reactance is critical for the application, the contractor should contact the manufacturer for the resistor's circuit reactance characteristics.

* 6.13.2 Pulse applications. Designers are CAUTIONED on using these resistors (see 6.13) in high power pulse applications. Since they have not been qualified nor tested for such applications, damage and premature failure are possible. These resistors only see a one time pulse (Short-time overload, see 4.8.8) as part of the group B inspection of this specification. Designers MAY CONSIDER using DLA Land and Maritime drawings, 03003, 03004, 03005, 03006, 03007, 03008, and 03009 for high power pulse applications. NOTE: These alternative resistors do not have the geometry (form, fit) of the MIL-PRF-39017 resistors, nor are they subject to the same Qualification/verification, and Periodic Group C inspection requirements as the RLR style resistors. Additionally, Group B for the DLA Land and Maritime drawings parts may be satisfied by providing generic data.

6.14 Spiraling (helixed). When used, spiraling should occupy no less than 70 percent of the resistor element actual length. The resistor element actual length should be defined as the nominal distance between terminal bands minus .047 inch. The film should be free of blisters, thin spots, areas inadequately bonded to the core, discolored spots, or other blemishes likely to cause flaking or a nonuniform ribbon.

6.15 Subject term (keyword listing).

Axial leads
Pulse application
Semiprecision
Small size
Solderable
Weldable

6.16 Tin whisker growth. The use of alloys with tin content greater than 97 percent, by mass, may exhibit tin whisker growth problems after manufacture. Tin whiskers may occur anytime from a day to years after manufacture and can develop under typical operating conditions, on products that use such materials. Conformal coatings applied over top of a whisker-prone surface will not prevent the formation of tin whiskers. Alloys of 3 percent lead, by mass, have shown to inhibit the growth of tin whiskers. For additional information on this matter, refer to ASTM-B545 (Standard Specification for Electrodeposited Coatings of Tin).

* 6.17 Environmentally preferable material. Environmentally preferable materials should be used to the maximum extent possible to meet the requirements of this specification. As of the dating of this document, the U.S. Environmental Protection Agency (EPA) is focusing efforts on reducing 31 priority chemicals. The list of chemicals and additional information is available on their website http://www.epa.gov/osw/hazard/wastemin/priority.htm. Use of these materials should be minimized or eliminated unless needed to meet the requirements specified herein (see Section 3).

6.18 Amendment notations. The margins of this specification are marked with asterisks to indicate modifications generated by this amendment. This was done as a convenience only and the Government assumes no liability whatsoever for any inaccuracies in these notations. Bidders and contractors are cautioned to evaluate the requirements of this document based on the entire content irrespective of the marginal notations.

APPENDIX A

PROCEDURE FOR QUALIFICATION INSPECTION

A.1. SCOPE

A.1.1 Scope. This appendix details the procedures for submission of samples for qualification inspection of resistors covered by this specification. The procedure for extending qualification of the required sample to other resistors covered by this specification is also outlined herein. This appendix is a mandatory part of the specification. The information contained herein is intended for compliance only.

A.2. APPLICABLE DOCUMENTS

* A.2.1 General. The documents listed in this section are specified in sections 3 and 4 of this specification. This section does not include documents cited in other sections of this specification or recommended for additional information or as examples. While every effort has been made to ensure the completeness of this list, document users are cautioned that they must meet all specified requirements documents cited in sections 3 and 4 of this specification, whether or not they are listed.

A.2.2 Government documents.

A.2.2.1 Specifications, standards, and handbooks. The following specifications, standards, and handbooks form a part of this document to the extent specified herein. Unless otherwise specified, the issues of these documents are those cited in the solicitation or contract.

DEPARTMENT OF DEFENSE STANDARDS

MIL-STD-1276 - Leads for Electronic Component Parts.

* (Copies of these documents are available online at http://quicksearch.dla.mil.)

* A.2.3 Order of precedence. Unless otherwise noted herein or in the contract, in the event of a conflict between the text of this document and the references cited herein (except for related specification sheets), the text of this document takes precedence. Nothing in this document, however, supersedes applicable laws and regulations unless a specific exemption has been obtained.

A.3. SUBMISSION

A.3.1 Product levels. Qualification of the C (non-ER) level is predicted upon meeting the ER qualification requirements for FR level P (see A.4.1). The procedure for submitting samples to become qualified to the initial FR level M is specified in A.3.2.

A.3.2 Sample. The sample consisting of 294 sample units, 98 of the lowest, 98 of the highest, and 98 of the critical or nearest to critical value (see table A-I), and in each style and characteristic and resistance tolerance for which qualification is sought, shall be submitted and subjected to the inspection of table IX. If no critical value is specified, the samples will be equally divided between the highest and lowest resistance values. In addition, 12 sample units, of any value or characteristic and 10 further sample units of any resistance value shall be submitted and subjected to the tests of group II and group VIII respectively, of table IX. When qualification for the RLR32 is desired, the above sample size shall be divided equally between both styles. After qualification has been granted, no changes shall be made in materials, design, or construction without prior notification to the qualifying activity.

APPENDIX A

TABLE A-I. Critical resistance value for qualification inspection. 1/

Style	Critical resistance value 2/
	Megohms
RLR07	.240
RLR20	.240
RLR32	.240
RLR05	.316

1/ Maximum continuous working voltage shall be applied (see 3.1)

2/ The critical resistance value is the maximum standard resistance value which will dissipate full wattage when the maximum continuous working voltage is applied.

A.4. EXTENT OF QUALIFICATION

A.4.1 Extension of qualification. The resistance range included in the qualification of any one style and tolerance shall be between any two adjacent resistance values which will pass the required qualification inspection. The extent of qualification between product levels and resistance tolerances shall be as in table A-II and table A-III.

TABLE A-II. Product levels.

Product level designator	Product level
S	R, P, M, C
R	P, M, C
P	M, C
M	
C	

TABLE A-III. Tolerance.

Tolerance	Will qualify tolerance
F	G, J, K
G	J, K
J	K
K	

A.5 SOLDER DIP (RETINNING) LEADS

A.5.1 Solder dip (retinning) leads. The manufacturer (or their authorized category B or category C distributor) may solder dip/retin the leads of product supplied to this specification provided the solder dip process (see A.5.2 of this appendix) or an equivalent process has been approved by the qualifying activity.

A.5.2 Qualifying activity approval. Approval of the solder dip process will be based on one of the following options:

a. When the original lead finish qualified was hot solder dip lead finish 52 of MIL-STD-1276 (NOTE: The 200 microinch maximum thickness is not applicable). The manufacturer shall use the same solder dip process for retinning as is used in the original manufacture of the product.

b. When the lead originally qualified was not hot solder dip lead finish 52 of MIL-STD-1276 as prescribed in A.5.2a, approval for the process to be used for solder dip shall be based on the following test procedure:

(1) Thirty samples of any resistance value for each style and lead finish are subjected to the manufacturers solder dip process. Following the solder dip process, the resistors are subjected to the dc resistance test and other group A electricals. No defects are allowed.

(2) Ten of the 30 samples are then subjected to the solderability test. No defects are allowed.

(3) The remaining 20 samples are subjected to the resistance to solder heat test followed by the moisture resistance test. No defects are allowed.

(NOTE: Solder dip of gold plated leads is not allowed.)

A.5.3 Solder dip/retinning options. The manufacturer may solder dip/retin as follows:

a. After the 100 percent group A screening tests: Following the solder dip/retinning process, the electrical measurements required in group A, subgroup 1, 100 percent screening tests shall be repeated on 100 percent of the lot (NOTE: The manufacturer may solder dip/retin prior to the 100 percent electrical measurements of the group A, subgroup 1 tests). The percentage defective allowable (PDA) for the electrical measurements, shall be the subgroup 1 tests.

b. As a corrective action, if the lot fails the group A solderability test: The lot may be retinned no more than two times. The lot after retinning shall be 100 percent screened for group A electrical requirements (dc resistance). Any parts failing (lot not exceeding PDA for group A, subgroup 1, see 4.6.3.2.1) these screens shall not be supplied to this specification. If electrical failures exceeding 1 percent of the lot are detected after the second retinning operation, the lot shall not be supplied to this specification.

c. After the group A inspection has been completed: Following the solder dip/retinning process, the electrical measurements required in group A, subgroup 1, 100 percent screening test shall be repeated on 100 percent of the lot. The PDA for the electrical measurements shall be as for the subgroup 1 tests. Following these tests, the manufacturer shall submit the lot to the group A solderability test as specified in 4.6.3.2.4.

Custodians:
Army - CR
Navy - EC
Air Force - 85
DLA - CC
NASA - NA

Review activities:
Army - AR, AT, AV, CR4, EA, MI
Navy - AS, CG, MC, OS
Air Force - 19, 99
Other - MDA

Preparing activity:
Army - CR

Agent:
DLA - CC

(Project 5905-2014-036)

NOTE: The activities listed above were interested in this document as of the date of this document. Since organizations and responsibilities can change, you should verify the currency of the information above using the ASSIST Online database at https://assist.dla.mil.