DEFENSE LOGISTICS AGENCY
LAND AND MARITIME
P.O. BOX 3990
COLUMBUS, OHIO 43218-3990

September 7, 2016

MEMORANDUM FOR MILITARY/INDUSTRY DISTRIBUTION

SUBJECT: Initial Draft of **MIL-PRF-39014/22F w/AMENDMENT 1** (CAPACITOR, FIXED, CERAMIC DIELECTRIC (GENERAL PURPOSE), ESTABLISHED RELIABILITY, STYLES CKR22, CKR23, AND CKR24).

Project number: 5910-2016-033.

The subject document is now available for viewing and downloading from the DLA Land and Maritime - VA website:

https://landandmaritimeapps.dla.mil/Programs/MilSpec/initialdrafts.aspx

This document is being amended to reassign duplicate dash numbers. Several capacitance values that were added as a part of revision F (28 October 2011) were inadvertently assigned dash numbers that were already in use. These duplicate numbers have not been qualified and no NSNs have been assigned. An effort has been made to highlight changes from prior revisions; however, reviewers are cautioned to review the entire document.

Concurrence or comments are required at this Center no later than 11 October 2016. If comments are not received during the allotted coordination period, concurrence may be assumed. Late comments may be held for the next specification action. Comments from military departments must be identified as either “Essential” or “Suggested”. Essential comments must be justified with supporting data. Military review activities should forward comments to their custodians of this office, as applicable, in sufficient time to allow for consolidating the department reply. Since Navy – EC is a custodian for this document; all Navy review activities should forward their comments directly to this Center.

The point of contact for this project is Mr. John Bonitatibus, DLA Land and Maritime - VAT, Post Office Box 3990, Columbus, OH 43218-3990. The preferred method of contact is via email. John can be reached at john.bonitatibus@dla.mil or 614-692-4709/DSN 850-4709.

RADECKI.MICHAEL.A.1230152051
Digitally signed by RADECKI.MICHAEL.A.1230152051
Date: 2016.09.07 10:35:38 -04'00'

Michael A. Radecki
Chief
Electronic Components Branch

NOTE: This draft, dated 6 September 2016, prepared by DLA-CC for Army-CR, has not been approved and is subject to modification.

DO NOT USE PRIOR TO APPROVAL. (Project 5910-2016-033)

INCH-POUND
MIL-PRF-39014/22F
w/AMENDMENT 1
~~28 October 2011~~DRAFT
SUPERSEDING
MIL-PRF-39014/22F~~E~~
~~7 December 2006~~28 October 2011

PERFORMANCE SPECIFICATION SHEET

CAPACITOR~~S~~, FIXED, CERAMIC DIELECTRIC
(GENERAL PURPOSE),
ESTABLISHED RELIABILITY,
STYLES CKR22, CKR23, AND CKR24

This specification sheet is approved for use by all Departments
and Agencies of the Department of Defense.

The requirements for acquiring the product described herein shall consist
of this specification sheet and MIL-PRF-39014.

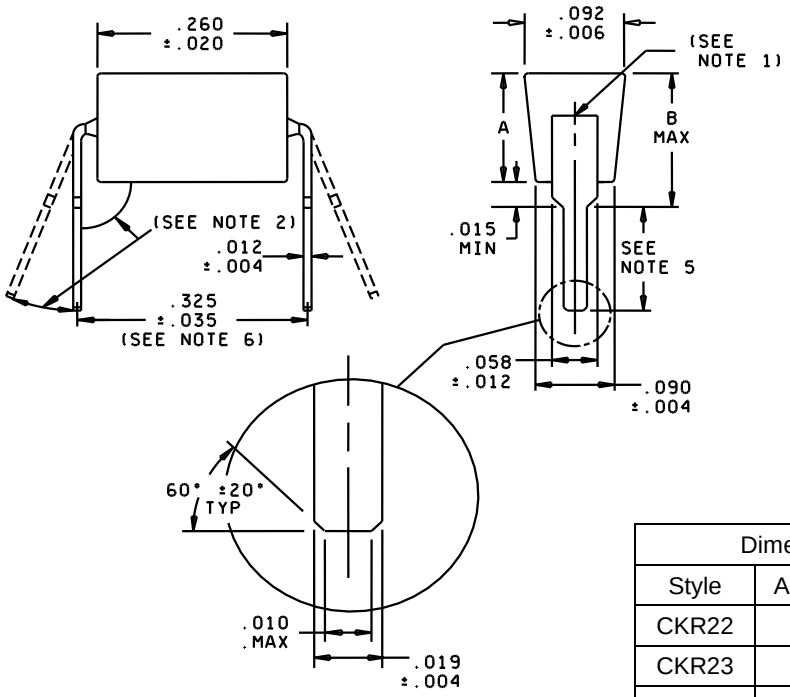

Dimensions		
Style	A ±.007	B
CKR22	.128	.175
CKR23	.155	.195
CKR24	.283	.320

FIGURE 1. Style CKR22, CKR23, and CKR24 capacitors.

AMSC N/A FSC 5910

~~DISTRIBUTION STATEMENT A. Approved for public release; distribution is unlimited.~~

Inches	mm	Inches	mm
.004	0.10	.092	2.34
.006	0.15	.128	3.25
.010	0.25	.155	3.94
.012	0.30	.165	4.19
.015	0.38	.185	4.70
.019	0.48	.260	6.60
.020	0.51	.283	7.19
.035	0.89	.320	8.13
.058	1.47	.325	8.26
.090	2.29		

NOTES:
1. Leads shall be centered within ±.005 inches (0.13 mm).
2. The angle shall be 95° +10°, -5°.
3. Dimensions are in inches.
4. Metric equivalents are given for general information only.
5. For standard lead length: .140 inch ±.020 inch (3.56 mm ±0.51 mm); for optional longer lead length: .170 inch ±.010 inch (4.32 mm ±0.25 mm).
6. The distance between the centers of the mounting holes will be .300 inch ±.010 inch~~es~~ (7.62 mm ±0.25 mm).
7. Nonconductive material shall not extend beyond .030 inch~~es~~ (0.76 mm) from the edge of the capacitor body.

FIGURE 1. Style CKR22, CKR23, and CKR24 capacitors - Continued.

REQUIREMENTS:

Dimensions and configuration: See figure 1.

Case type: Molded plastic encapsulated.

Capacitance value: See table III.

Capacitance tolerance: D = ±.5 pF, F = ±1 percent, J = ±5 percent, K = ±10 percent, M = ±20 percent.

Operating temperature range: -55° to +125°C.

Voltage rating: See table III.

Dissipation factor (DF): See table I.

Dielectric withstanding voltage: Body insulation shall be able to withstand 500 V dc between leads and case.

Insulation resistance (IR):

At +25°C: Not less than 100,000 megohms or 1,000 megohm-microfarads, whichever is less.
At +125°C: Not less than 10,000 megohms or 100 megohm-microfarads, whichever is less.

Voltage-temperature limits: See table I. For capacitors with values of 18 pF or less, the voltage-temperature limits tolerance shall be determined in accordance with table II.

TABLE I. Dissipation factors and voltage-temperature limits.

Capacitance change with reference to +25°C			
Characteristic symbol	Step A through step D table VI of MIL-PRF-39014 Bias = 0 volts	Step E through step G table VI of MIL-PRF-39014 Bias = rated voltage	Dissipation factor (percent)
CG CH	0 ±30 ppm/°C 0 ±60 ppm/°C 1/	0 ±30 ppm/°C 0 ±60 ppm/°C 1/	.15 .15
BX	±15 percent	+15, -25 percent as applicable	2.5
BR	±15 percent	+15, -40 percent as applicable	3.0

1/ See table II for capacitance values less than 20 pF.

TABLE II. Voltage-temperature limits for capacitance values of 18 pF or less.

Voltage-temperature limits for capacitance values of 18 pF or less	
Capacitance values (pF)	Voltage-temperature coefficient tolerance
1.0 - 1.8	Not measurable
2.2 - 3.9	0 ± 250 ppm/°C
4.7 - 6.8	0 ± 120 ppm/°C
8.2 - 18.0	0 ± 60 ppm/°C

Immersion:

IR: Not less than 50 percent of initial +25°C requirements.

Resistance to soldering heat:

ΔC: ±5 percent or .25 pF, whichever is greater for CG and CH characteristics.
ΔC: +15, -5 percent of the initial +25°C measurement for characteristics BX and BR.

DF: Not to exceed the initial limit.

IR: Not less than initial +25°C limit.

Terminal strength: Method 211 of MIL-STD-202, condition B, except that each lead shall be bent away from the body 90° from the original position (see figure 1) and back, two bends.

Life:

Rated conditions, 100 percent of dc rated voltage at +125°C.

0 hour through 3,000 hours:

IR: At +25°C, not less than 50 percent of initial +25°C requirement.
At +125°C, not less than 50 percent of initial +125°C requirement.

ΔC: ±5 percent or .5 pF, whichever is greater, from initial measured value for CG and CH characteristics
±20 percent from initial measured value for characteristics BX and BR.

Dissipation factor: Not to exceed the initial limit.

4,000 hours through 32,000 hours:

IR: At +25°C, not less than 15 percent of initial +25°C requirement.
At +125°C, not less than 15 percent of initial +125°C requirement.

ΔC: ±5 percent or .5 pF, whichever is greater, from initial measured value for CG and CH characteristics
±20 percent from initial measured value for characteristics BX and BR.

DF~~issipation factor~~: Not to exceed the initial limit.

Accelerated condition, 200 percent of dc rated voltage at +125°C.

0 hour and 250 hours:

IR: At +25°C, not less than 50 percent of initial +25°C requirement.
At +125°C, not less than 50 percent of initial +125°C requirement.

ΔC: ±5 percent or .5 pF, whichever is greater from initial measured value for CG and CH characteristics
±20 percent from initial measured value for characteristics BX and BR.

DF~~issipation factor~~: Not to exceed the initial limit.

1,000 hours, 2,000 hours, and 4,000 hours:

IR: At +25°C, not less than 15 percent of initial +25°C requirement.
At +125°C, not less than 15 percent of initial +125°C requirement.

ΔC: ±20 percent from initial measured value.

DF~~issipation factor~~: Not to exceed the initial limit.

Part or Identifying Number (PIN): - M39014/22- (dash number from table III) (e.g. M39014/22-0001).

Marking: In accordance with MIL-PRF-39014, except that minimum marking as shown in the following example, shall be used. Full marking shall be included on the package.

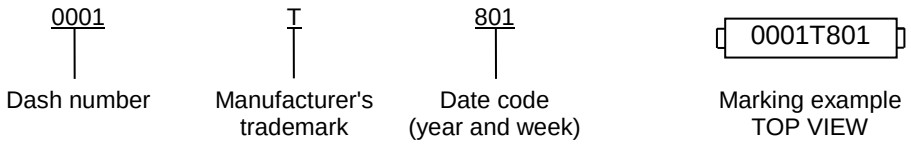

TABLE III. Dash numbers and electrical characteristics.

Dash number Failure rate level (%/1,000 hours)								Capacitance (pF)	Capacitance tolerance	DC rated voltage (volts)
Standard lead length 1/				Optional longer lead length 1/						
1.0(M)	0.1(P)	0.01(R)	0.001(S)	1.0(M)	0.1(P)	0.01(R)	0.001(S)			
Style CKR22, see table II for voltage-temperature limits.										
0001	0301	0601	0901	3001	3301	3601	3901	1.0	D	200
0004	0304	0604	0904	3004	3304	3604	3904	1.2	D	200
0007	0307	0607	0907	3007	3307	3607	3907	1.5	D	200
0010	0310	0610	0910	3010	3310	3610	3910	1.8	D	200
0013	0313	0613	0913	3013	3313	3613	3913	2.2	D	200
0016	0316	0616	0916	3016	3316	3616	3916	2.7	D	200
0019	0319	0619	0919	3019	3319	3619	3919	3.3	D	200
0022	0322	0622	0922	3022	3322	3622	3922	3.9	D	200
0025	0325	0625	0925	3025	3325	3625	3925	4.7	D	200
0028	0328	0628	0928	3028	3328	3628	3928	5.6	D	200
0031	0331	0631	0931	3031	3331	3631	2931	6.8	D	200
0034	0334	0634	0934	3034	3334	3634	3934	8.2	D	200
0037	0337	0637	0937	3037	3337	3637	3937	10	D	200
0038	0338	0638	0938	3038	3338	3638	3938	10	J	200
0039	0339	0639	0939	3039	3339	3639	3939	10	K	200
0040	0340	0640	0940	3040	3340	3640	3940	12	D	200
0041	0341	0641	0941	3041	3341	3641	3941	12	J	200
0042	0342	0642	0942	3042	3342	3642	3942	12	K	200
0043	0343	0643	0943	3043	3343	3643	3943	15	D	200
0044	0344	0644	0944	3044	3344	3644	3944	15	J	200
0045	0345	0645	0945	3045	3345	3645	3945	15	K	200
0046	0346	0646	0946	3046	3346	3646	3946	18	D	200
0047	0347	0647	0947	3047	3347	3647	3947	18	J	200
0048	0348	0648	0948	3048	3348	3648	3948	18	K	200
Style CKR22, Characteristic CG (voltage-temperature limits of 0 ±30 ppm/°C).										
0049	0349	0649	0949	3049	3349	3649	3949	22	D	200
0050	0350	0650	0950	3050	3350	3650	3950	22	J	200
0051	0351	0651	0951	3051	3351	3651	3951	22	K	200
0052	0352	0652	0952	3052	3352	3652	3952	27	D	200
0053	0353	0653	0953	3053	3353	3653	3953	27	J	200
0054	0354	0654	0954	3054	3354	3654	3954	27	K	200
0055	0355	0655	0955	3055	3355	3655	3955	33	D	200
0056	0356	0656	0956	3056	3356	3656	3956	33	J	200
0057	0357	0657	0957	3057	3357	3657	3957	33	K	200
0058	0358	0658	0958	3058	3358	3658	3958	39	D	200
0059	0359	0659	0959	3059	3359	3659	3959	39	J	200
0060	0360	0660	0960	3060	3360	3660	3960	39	K	200
0061	0361	0661	0961	3061	3361	3661	3961	47	D	200
0062	0362	0662	0962	3062	3362	3662	3962	47	J	200
0063	0363	0663	0963	3063	3363	3663	3963	47	K	200
0064	0364	0664	0964	3064	3364	3664	3964	56	D	200
0065	0365	0665	0965	3065	3365	3665	3965	56	J	200
0066	0366	0666	0966	3066	3366	3666	3966	56	K	200
0067	0367	0667	0967	3067	3367	3667	3967	68	F	200
0068	0368	0668	0968	3068	3368	3668	3968	68	J	200
0069	0369	0669	0969	3069	3369	3669	3969	68	K	200
0070	0370	0670	0970	3070	3370	3670	3970	82	F	200
0071	0371	0671	0971	3071	3371	3671	3971	82	J	200
0072	0372	0672	0972	3072	3372	3672	3972	82	K	200
0073	0373	0673	0973	3073	3373	3673	3973	100	F	200
0074	0374	0674	0974	3074	3374	3674	3974	100	J	200

See footnote at end of table.

TABLE III. Dash numbers and electrical characteristics - Continued.

Dash number Failure rate level (%/1,000 hours)								Capacitance (pF)	Capacitance tolerance	DC rated voltage (volts)
Standard lead length 1/				Optional longer lead length 1/						
1.0(M)	0.1(P)	0.01(R)	0.001(S)	1.0(M)	0.1(P)	0.01(R)	0.001(S)			
Style CKR22, Characteristic CG (voltage-temperature limits of 0 ±30 ppm/°C) - Continued.										
0075	0375	0675	0975	3075	3375	3675	3975	100	K	200
0076	0376	0676	0976	3076	3376	3676	3976	120	F	200
0077	0377	0677	0977	3077	3377	3677	3977	120	J	200
0078	0378	0678	0978	3078	3378	3678	3978	120	K	200
0079	0379	0679	0979	3079	3379	3679	3979	150	F	200
0080	0380	0680	0980	3080	3380	3680	3980	150	J	200
0081	0381	0681	0981	3081	3381	3681	3981	150	K	200
0082	0382	0682	0982	3082	3382	3682	3982	180	F	200
0083	0383	0683	0983	3083	3383	3683	3983	180	J	200
0084	0384	0684	0984	3084	3384	3684	3984	180	K	200
0085	0385	0685	0985	3085	3385	3685	3985	220	F	200
0086	0386	0686	0986	3086	3386	3686	3986	220	J	200
0087	0387	0687	0987	3087	3387	3687	3987	220	K	200
0088	0388	0688	0988	3038	3338	3638	3938	270	F	200
0089	0389	0689	0989	3089	3389	3689	3989	270	J	200
0090	0390	0690	0990	3090	3390	3690	3990	270	K	200
0091	0391	0691	0991	3091	3391	3691	3991	330	F	200
0092	0392	0692	0992	3092	3392	3692	3992	330	J	200
0093	0393	0693	0993	3093	3393	3693	3993	330	K	200
0094	0394	0694	0994	3094	3394	3694	3994	390	F	200
0095	0395	0695	0995	3095	3395	3695	3995	390	J	200
0096	0396	0696	0996	3096	3396	3696	3996	390	K	200
0097	0397	0697	0997	3097	3397	3697	3997	470	F	200
0098	0398	0698	0998	3098	3398	3698	3998	470	J	200
0099	0399	0699	0999	3099	3399	3699	3999	470	K	200
0100	0400	0700	1000	3100	3400	3700	4000	560	F	100
0101	0401	0701	1001	3101	3401	3701	4001	560	J	100
0102	0402	0702	1002	3102	3402	3702	4002	560	K	100
0103	0403	0703	1003	3103	3403	3703	4003	680	F	100
0104	0404	0704	1004	3104	3404	3704	4004	680	J	100
0105	0405	0705	1005	3105	3405	3705	4005	680	K	100
0106	0406	0706	1006	3106	3406	3706	4006	820	F	100
0107	0407	0707	1007	3107	3407	3707	4007	820	J	100
0108	0408	0708	1008	3108	3408	3708	4008	820	K	100
0109	0409	0709	1009	3109	3409	3709	4009	1,000	F	100
0110	0410	0710	1010	3110	3410	3710	4010	1,000	J	100
0111	0411	0711	1011	3111	3411	3711	4011	1,000	K	100
0112	0412	0712	1012	3112	3412	3712	4012	1,200	F	100
0113	0413	0713	1013	3113	3413	3713	4013	1,200	J	100
0114	0414	0714	1014	3114	3414	3714	4014	1,200	K	100
0115	0415	0715	1015	3115	3415	3715	4015	1,500	F	100
0116	0416	0716	1016	3116	3416	3716	4016	1,500	J	100
0117	0417	0717	1017	3117	3417	3717	4017	1,500	K	100
0118	0418	0718	1018	3118	3418	3718	4018	1,800	F	100
0119	0419	0719	1019	3119	3419	3719	4019	1,800	J	100
0120	0420	0720	1020	3120	3420	3720	4020	1,800	K	100
0121	0421	0721	1021	3121	3421	3721	4021	2,200	F	100
0122	0422	0722	1022	3122	3422	3722	4022	2,200	J	100
0123	0423	0723	1023	3123	3423	3723	4023	2,200	K	100
0124	0424	0724	1024	3124	3424	3724	4024	2,700	F	50
0125	0425	0725	1025	3125	3425	3725	4025	2,700	J	50

See footnote at end of table.

TABLE III. Dash numbers and electrical characteristics - Continued.

Dash number Failure rate level (%/1,000 hours)								Capacitance (pF)	Capacitance tolerance	DC rated voltage (volts)
Standard lead length 1/				Optional longer lead length 1/						
1.0(M)	0.1(P)	0.01(R)	0.001(S)	1.0(M)	0.1(P)	0.01(R)	0.001(S)			
Style CKR22, Characteristic CG (voltage-temperature limits of 0 ±30 ppm/°C) - Continued.										
0126	0426	0726	1026	3126	3426	3726	4026	2,700	K	50
0127	0427	0727	1027	3127	3427	3727	4027	3,300	F	50
0128	0428	0728	1028	3128	3428	3728	4028	3,300	J	50
0129	0429	0729	1029	3129	3429	3729	4029	3,300	K	50
0130	0430	0730	1030	3130	3430	3730	4030	3,900	F	50
0131	0431	0731	1031	3131	3431	3731	4031	3,900	J	50
0132	0432	0732	1032	3132	3432	3732	4032	3,900	K	50
0133	0433	0733	1033	3133	3433	3733	4033	4,700	F	50
0134	0434	0734	1034	3134	3434	3734	4034	4,700	J	50
0135	0435	0735	1035	3135	3435	3735	4035	4,700	K	50
0136	0436	0736	1036	3136	3436	3736	4036	5,600	F	50
0137	0437	0737	1037	3137	3437	3737	4037	5,600	J	50
0138	0438	0738	1038	3138	3438	3738	4038	5,600	K	50
0139	0439	0739	1039	3139	3439	3739	4039	6,800	F	50
0140	0440	0740	1040	3140	3440	3740	4040	6,800	J	50
0141	0441	0741	1041	3141	3441	3741	4041	6,800	K	50
0142	0442	0742	1042	3142	3442	3742	4042	8,200	F	50
0143	0443	0743	1043	3143	3443	3743	4043	8,200	J	50
0144	0444	0744	1044	3144	3444	3744	4044	8,200	K	50
0145	0445	0745	1045	3145	3445	3745	4045	10,000	F	50
0146	0446	0746	1046	3146	3446	3746	4046	10,000	J	50
0147	0447	0747	1047	3147	3447	3747	4047	10,000	K	50
Style CKR22, Characteristic BX (voltage-temperature limits of ±15% and +15, -25%)										
0148	0448	0748	1048	3148	3448	3748	4048	270	K	200
0149	0449	0749	1049	3149	3449	3749	4049	330	K	200
0150	0450	0750	1050	3150	3450	3750	4050	330	M	200
0151	0451	0751	1051	3151	3451	3751	4051	390	K	200
0152	0452	0752	1052	3152	3452	3752	4052	470	K	200
0153	0453	0753	1053	3153	3453	3753	4053	470	M	200
0154	0454	0754	1054	3154	3454	3754	4054	560	K	200
0155	0455	0755	1055	3155	3455	3755	4055	680	K	200
0156	0456	0756	1056	3156	3456	3756	4056	680	M	200
0157	0457	0757	1057	3157	3457	3757	4057	820	K	200
0158	0458	0758	1058	3158	3458	3758	4058	1,000	K	100
0159	0459	0759	1059	3159	3459	3759	4059	1,000	M	100
0160	0460	0760	1060	3160	3460	3760	4060	1,200	K	100
0161	0461	0761	1061	3161	3461	3761	4061	1,500	K	100
0162	0462	0762	1062	3162	3462	3762	4062	1,500	M	100
0163	0463	0763	1063	3163	3463	3763	4063	1,800	K	100
0164	0464	0764	1064	3164	3464	3764	4064	2,200	K	100
0165	0465	0765	1065	3165	3465	3765	4065	2,200	M	100
0166	0466	0766	1066	3166	3466	3766	4066	2,700	K	100
0167	0467	0767	1067	3167	3467	3767	4067	3,300	K	100
0168	0468	0768	1068	3168	3468	3768	4068	3,300	M	100
0169	0469	0769	1069	3169	3469	3769	4069	3,900	K	100
0170	0470	0770	1070	3170	3470	3770	4070	4,700	K	100
0171	0471	0771	1071	3171	3471	3771	4071	4,700	M	100
0172	0472	0772	1072	3172	3472	3772	4072	5,600	K	100
0173	0473	0773	1073	3173	3473	3773	4073	6,800	K	100
0174	0474	0774	1074	3174	3474	3774	4074	6,800	M	100
0175	0475	0775	1075	3175	3475	3775	4075	8,200	K	100

See footnote at end of table.

TABLE III. Dash numbers and electrical characteristics - Continued.

Dash number Failure rate level (%/1,000 hours)								Capacitance (pF)	Capacitance tolerance	DC rated voltage (volts)
Standard lead length 1/				Optional longer lead length 1/						
1.0(M)	0.1(P)	0.01(R)	0.001(S)	1.0(M)	0.1(P)	0.01(R)	0.001(S)			
Style CKR22, Characteristic BX (voltage-temperature limits of ±15% and +15, -25%) - Continued.										
0176	0476	0776	1076	3176	3476	3776	4076	10,000	K	100
0177	0477	0777	1077	3177	3477	3777	4077	10,000	M	100
0178	0478	0778	1078	3178	3478	3778	4078	12,000	K	50
0179	0479	0779	1079	3179	3479	3779	4079	15,000	K	50
0180	0480	0780	1080	3180	3480	3780	4080	15,000	M	50
0181	0481	0781	1081	3181	3481	3781	4081	18,000	K	50
0182	0482	0782	1082	3182	3482	3782	4082	22,000	K	50
0183	0483	0783	1083	3183	3483	3783	4083	22,000	M	50
0184	0484	0784	1084	3184	3484	3784	4084	27,000	K	50
0185	0485	0785	1085	3185	3485	3785	4085	33,000	K	50
0186	0486	0786	1086	3186	3486	3786	4086	33,000	M	50
0187	0487	0787	1087	3187	3487	3787	4087	39,000	K	50
0188	0488	0788	1088	3188	3488	3788	4088	47,000	K	50
0189	0489	0789	1089	3189	3489	3789	4089	47,000	M	50
0190	0490	0790	1090	3190	3490	3790	4090	56,000	K	50
0191	0491	0791	1091	3191	3491	3791	4091	68,000	K	50
0192	0492	0792	1092	3192	3492	3792	4092	68,000	M	50
0193	0493	0793	1093	3193	3493	3793	4093	82,000	K	50
0194	0494	0794	1094	3194	3494	3794	4094	100,000	K	50
0195	0495	0795	1095	3195	3495	3795	4095	100,000	M	50
Style CKR23, Characteristic CG (voltage-temperature limits of 0 ±30 ppm/°C)										
0258	0558	0858	1158	3258	3558	3858	4158	560	F	200
0259	0559	0859	1159	3259	3559	3859	4159	560	J	200
0260	0560	0860	1160	3260	3560	3860	4160	560	K	200
0261	0561	0861	1161	3261	3561	3861	4161	680	F	200
0262	0562	0862	1162	3262	3562	3862	4162	680	J	200
0263	0563	0863	1163	3263	3563	3863	4163	680	K	200
0264	0564	0864	1164	3264	3564	3864	4164	820	F	200
0265	0565	0865	1165	3265	3565	3865	4165	820	J	200
0266	0566	0866	1166	3266	3566	3866	4166	820	K	200
0267	0567	0867	1167	3267	3567	3867	4167	1,000	F	200
0268	0568	0868	1168	3268	3568	3868	4168	1,000	J	200
0269	0569	0869	1169	3269	3569	3869	4169	1,000	K	200
0270	0570	0870	1170	3270	3570	3870	4170	1,200	F	200
0271	0571	0871	1171	3271	3571	3871	4171	1,200	J	200
0272	0572	0872	1172	3272	3572	3872	4172	1,200	K	200
0273	0573	0873	1173	3273	3573	3873	4173	2,700	F	100
0274	0574	0874	1174	3274	3574	3874	4174	2,700	J	100
0275	0575	0875	1175	3275	3575	3875	4175	2,700	K	100
0276	0576	0876	1176	3276	3576	3876	4176	3,300	F	100
0277	0577	0877	1177	3277	3577	3877	4177	3,300	J	100
0278	0578	0878	1178	3278	3578	3878	4178	3,300	K	100
0279	0579	0879	1179	3279	3579	3879	4179	4,700	F	50
0280	0580	0880	1180	3280	3580	3880	4180	4,700	J	50
0281	0581	0881	1181	3281	3581	3881	4181	4,700	K	50
0282	0582	0882	1182	3282	3582	3882	4182	5,600	F	50
0283	0583	0883	1183	3283	3583	3883	4183	5,600	J	50
0284	0584	0884	1184	3284	3584	3884	4184	5,600	K	50
0285	0585	0885	1185	3285	3585	3885	4185	6,800	F	50
0286	0586	0886	1186	3286	3586	3886	4186	6,800	J	50
0287	0587	0887	1187	3287	3587	3887	4187	6,800	K	50

See footnote at end of table.

TABLE III. Dash numbers and electrical characteristics - Continued.

Dash number Failure rate level (%/1,000 hours)								Capacitance (pF)	Capacitance tolerance	DC rated voltage (volts)
Standard lead length 1/				Optional longer lead length 1/						
1.0(M)	0.1(P)	0.01(R)	0.001(S)	1.0(M)	0.1(P)	0.01(R)	0.001(S)			
Style CKR23, Characteristic CG (voltage-temperature limits of 0 ±30 ppm/°C) - Continued.										
0288	0588	0888	1188	3288	3588	3888	4188	8,200	F	50
0289	0589	0889	1189	3289	3589	3889	4189	8,200	J	50
0290	0590	0890	1190	3290	3590	3890	4190	8,200	K	50
0291	0591	0891	1191	3291	3591	3891	4191	10,000	F	50
0292	0592	0892	1192	3292	3592	3892	4192	10,000	J	50
0293	0593	0893	1193	3293	3593	3893	4193	10,000	K	50
Style CKR23, Characteristic BX (voltage-temperature limits of +15% and +15, -25%).										
0196	0496	0796	1096	3196	3496	3796	4096	1,000	K	200
0197	0497	0797	1097	3197	3497	3797	4097	1,000	M	200
0198	0498	0798	1098	3198	3498	3798	4098	1,200	K	200
0199	0499	0799	1099	3199	3499	3799	4099	1,500	K	200
0200	0500	0800	1100	3200	3500	3800	4100	1,500	M	200
0201	0501	0801	1101	3201	3501	3801	4101	1,800	K	200
0202	0502	0802	1102	3202	3502	3802	4102	2,200	K	200
0203	0503	0803	1103	3203	3503	3803	4103	2,200	M	200
0204	0504	0804	1104	3204	3504	3804	4104	2,700	K	200
0205	0505	0805	1105	3205	3505	3805	4105	3,300	K	200
0206	0506	0806	1106	3206	3506	3806	4106	3,300	M	200
0207	0507	0807	1107	3207	3507	3807	4107	3,900	K	200
0208	0508	0808	1108	3208	3508	3808	4108	4,700	K	200
0209	0509	0809	1109	3209	3509	3809	4109	4,700	M	200
0210	0510	0810	1110	3210	3510	3810	4110	5,600	K	200
0211	0511	0811	1111	3211	3511	3811	4111	6,800	K	200
0212	0512	0812	1112	3212	3512	3812	4112	6,800	M	200
0213	0513	0813	1113	3213	3513	3813	4113	8,200	K	200
0214	0514	0814	1114	3214	3514	3814	4114	10,000	K	200
0215	0515	0815	1115	3215	3515	3815	4115	10,000	M	200
0216	0516	0816	1116	3216	3516	3816	4116	12,000	K	100
0217	0517	0817	1117	3217	3517	3817	4117	15,000	K	100
0218	0518	0818	1118	3218	3518	3818	4118	15,000	M	100
0219	0519	0819	1119	3219	3519	3819	4119	18,000	K	100
0220	0520	0820	1120	3220	3520	3820	4120	22,000	K	100
0221	0521	0821	1121	3221	3521	3821	4121	22,000	M	100
0222	0522	0822	1122	3222	3522	3822	4122	27,000	K	100
0223	0523	0823	1123	3223	3523	3823	4123	33,000	K	100
0224	0524	0824	1124	3224	3524	3824	4124	33,000	M	100
0225	0525	0825	1125	3225	3525	3825	4125	39,000	K	100
0226	0526	0826	1126	3226	3526	3826	4126	47,000	K	100
0227	0527	0827	1127	3227	3527	3827	4127	47,000	M	100
0228	0528	0828	1128	3228	3528	3828	4128	56,000	K	100
0229	0529	0829	1129	3229	3529	3829	4129	68,000	K	100
0230	0530	0830	1130	3230	3530	3830	4130	68,000	M	100
0231	0531	0831	1131	3231	3531	3831	4131	82,000	K	100
0232	0532	0832	1132	3232	3532	3832	4132	100,000	K	100
0233	0533	0833	1133	3233	3533	3833	4133	100,000	M	100
0234	0534	0834	1134	3234	3534	3834	4134	120,000	K	50
0235	0535	0835	1135	3235	3535	3835	4135	150,000	K	50
0236	0536	0836	1136	3236	3536	3836	4136	150,000	M	50
0237	0537	0837	1137	3237	3537	3837	4137	180,000	K	50
0238	0538	0838	1138	3238	3538	3838	4138	220,000	K	50
0239	0539	0839	1139	3239	3539	3839	4139	220,000	M	50

See footnote at end of table.

TABLE III. Dash numbers and electrical characteristics – Continued.

Dash number Failure rate level (%/1,000 hours)								Capacitance (pF)	Capacitance tolerance	DC rated voltage (volts)
Standard lead length 1/				Optional longer lead length 1/						
1.0(M)	0.1(P)	0.01(R)	0.001(S)	1.0(M)	0.1(P)	0.01(R)	0.001(S)			
Style CKR24, Characteristic BX (voltage-temperature limits of +15% and +15, -25%).										
2001	2301	2601	2901	5001	5301	5601	5901	270,000	K	50
2002	2302	2602	2902	5002	5302	5602	5902	270,000	M	50
2003	2303	2603	2903	5003	5303	5603	5903	330,000	K	50
2004	2304	2604	2904	5004	5304	5604	5904	330,000	M	50
2005	2305	2605	2905	5005	5305	5605	5905	390,000	K	50
2006	2306	2606	2906	5006	5306	5606	5906	390,000	M	50
2007	2307	2607	2907	5007	5307	5607	5907	470,000	K	50
2008	2308	2608	2908	5008	5308	5608	5908	470,000	M	50
2009	2309	2609	2909	5009	5309	5609	5909	560,000	K	50
2010	2310	2610	2910	5010	5310	5610	5910	560,000	M	50
2011	2311	2611	2911	5011	5311	5611	5911	680,000	K	50
2012	2312	2612	2912	5012	5312	5612	5912	680,000	M	50
2013	2313	2613	2913	5013	5313	5613	5913	820,000	K	50
2014	2314	2614	2914	5014	5314	5614	5914	820,000	M	50
2015	2315	2615	2915	5015	5315	5615	5915	1,000,000	K	50
2016	2316	2616	2916	5016	5316	5616	5916	1,000,000	M	50
Style CKR24, Characteristic BR (voltage-temperature limits of +15% and +15, -40%).										
0240	0540	0840	1140	3240	3540	3840	4140	120,000	K	100
2017	2317	2617	2917	5017	5317	5617	5917	120,000	M	100
0241	0541	0841	1141	3241	3541	3841	4141	150,000	K	100
0242	0542	0842	1142	3242	3542	3842	4142	150,000	M	100
0243	0543	0843	1143	3243	3543	3843	4143	180,000	K	50
2018	2318	2618	2918	5018	5318	5618	5918	180,000	M	50
0244	0544	0844	1144	3244	3544	3844	4144	220,000	K	50
0245	0545	0845	1145	3245	3545	3845	4145	220,000	M	50
0246	0546	0846	1146	3246	3546	3846	4146	270,000	K	50
2019	2319	2619	2919	5019	5319	5619	5919	270,000	M	50
0247	0547	0847	1147	3247	3547	3847	4147	330,000	K	50
0248	0548	0848	1148	3248	3548	3848	4148	330,000	M	50
0249	0549	0849	1149	3249	3549	3849	4149	390,000	K	50
2020	2320	2620	2920	5020	5320	5620	5920	390,000	M	50
0250	0550	0850	1150	3250	3550	3850	4150	470,000	K	50
0251	0551	0851	1151	3251	3551	3851	4151	470,000	M	50
0252	0552	0852	1152	3252	3552	3852	4152	560,000	K	50
0253	0553	0853	1153	3253	3553	3853	4153	680,000	K	50
0254	0554	0854	1154	3254	3554	3854	4154	680,000	M	50
0255	0555	0855	1155	3255	3555	3855	4155	820,000	K	50
0256	0556	0856	1156	3256	3556	3856	4156	1,000,000	K	50
0257	0557	0857	1157	3257	3557	3857	4157	1,000,000	M	50

1/ See figure 1 for differences in lead length. The optional longer lead length is, with acquiring activity approval, substitutable for the same part with standard lead length.

Changes from previous issue. The margins of this specification are marked with vertical lines to indicate where changes from the previous issue were made. This was done as a convenience only and the Government assumes no liability whatsoever for any inaccuracies in these notations. Bidders and contractors are cautioned to evaluate the requirements of this document based on the entire content irrespective of the marginal notations and relationship to the last previous issue.

Referenced documents: In addition to MIL-PRF-39014, this document also references method 211 of MIL-STD-202.

Custodians:
Army - CR
Navy - EC
Air Force - 85
DLA - CC
~~NASA~~ Other - NA

Review activities:
Army - AR, AT, AV, CR4, MI
Navy - MC
Air Force - 19, 99

Preparing activity:
Army - CR

Agent:
DLA - CC

(Project 5910-2016-033)

NOTE: The activities listed above were interested in this document as of the date of this document. Since organizations and responsibilities change, you should verify the currency of the information above using the ASSIST Online database at https://assist.~~daps.~~dla.mil/.