INCH-POUND

MIL-PRF-39012/82G
w/AMENDMENT 3
5 October 2016
SUPERSEDING
MIL-PRF-39012/82G
w/AMENDMENT 2
2 June 2015

PERFORMANCE SPECIFICATION SHEET

CONNECTORS, RECEPTACLE, ELECTRICAL, COAXIAL, RADIO FREQUENCY, SERIES SMA (CABLED, SEMIRIGID), FLANGE MOUNTED – SOCKET CONTACT, CLASS 2

This specification is approved for use by all Departments and Agencies of the Department of Defense.

The requirements for acquiring the product described herein shall consist of this specification sheet and MIL-PRF-39012.

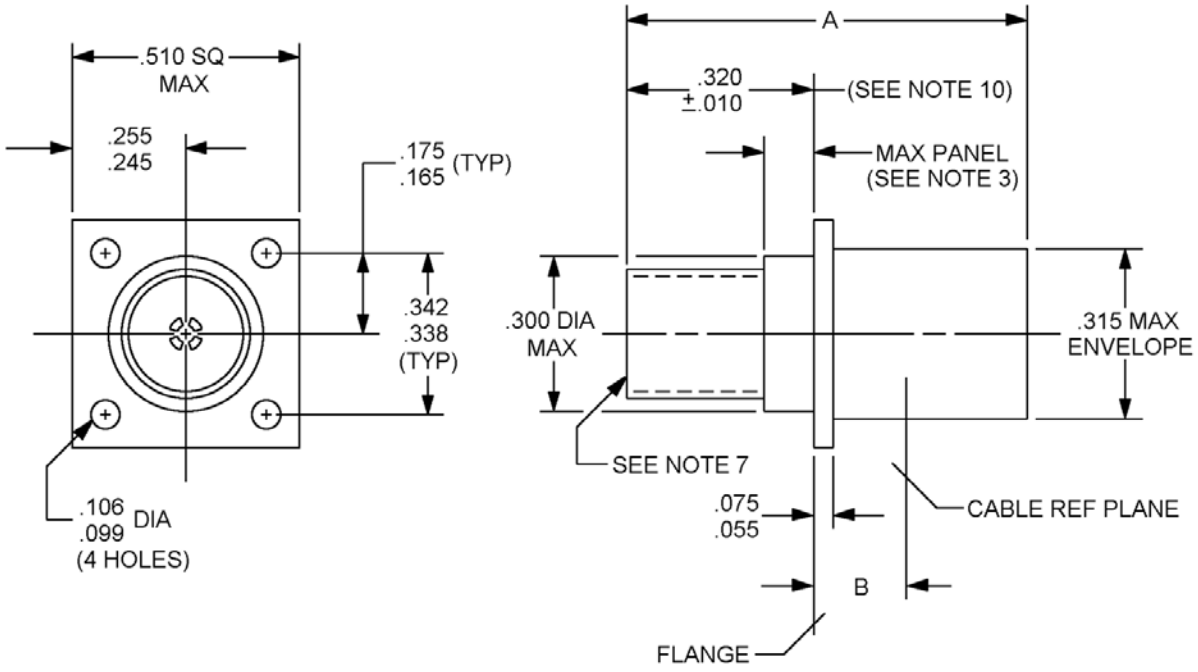

FIGURE 1. General configuration.

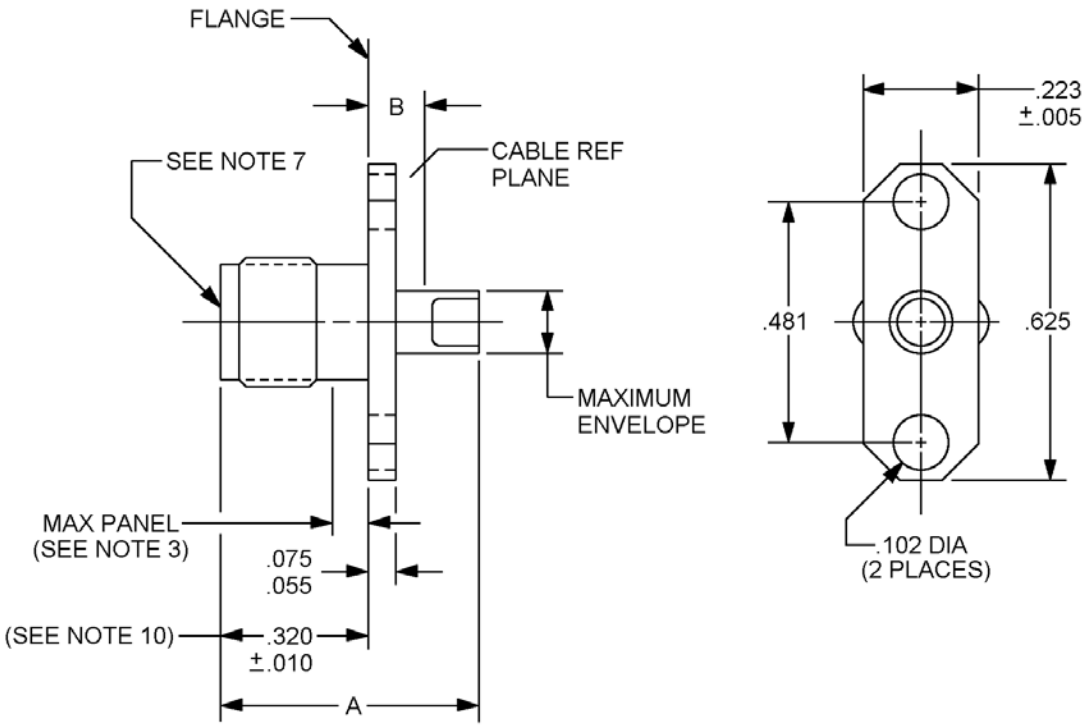

Inches	mm	Inches	mm	Inches	mm	Inches	mm
.005	0.13	.168	4.27	.310	7.87	.481	12.22
.055	1.40	.175	4.45	.312	7.92	.510	12.95
.075	1.91	.223	5.66	.315	8.00	.625	15.88
.099	2.51	.245	6.22	.338	8.59	.850	21.59
.102	2.59	.255	6.48	.340	8.64		
.106	2.69	.300	7.62	.342	8.69		

NOTES:
1. Dimensions are in inches.
2. Metric equivalents are given for information only.
3. Receptacle recommended for component part use and for use on panels with a .090 (2.29 mm) maximum thickness.
4. Wrench flats are to accommodate standard wrench opening in accordance with FED-STD-H28, appendix 10.
5. All undimensioned pictorial configurations are for reference purposes only.
6. Dimension A defines the overall length of the connector when assembled to the cable.
7. Series SMA, socket contact interface, in accordance with MIL-STD-348.
8. All threads shall conform to FED-STD-H28.
9. Number 2 screws are recommended for mounting purposes.
10. This dimensional change shall be effective for all products delivered after 1 April 1993.

FIGURE 1. General configuration – Continued.

TABLE I. Dash numbers, cross-reference, and dimensions.

Dash No. M39012/82-	Applicable cable 1/ M17/	Dimension A (millimeters)		Dimension B (millimeters)
		Before assembly	After assembly	
CATEGORY A – FIELD SERVICEABLE (NO SPECIAL TOOLS REQUIRED) 2/				
3009 4009	133-RG405 *	.518 (13.16 mm) Maximum	.505 (12.83 mm) Maximum	Not applicable
3010 4010	130-RG402 *			
CATEGORY E – FIELD REPLACEABLE (STANDARD ASSEMBLY TOOL KIT) 3/ 4/				
3005 5/	133-RG405 *	Not applicable	.850 (21.59 mm) maximum	Not applicable 6/
3006 5/	130-RG402 *			
3007 2/ 4007 2/	133-RG405 *			
3008 2/ 4008 2/	130-RG402 *			
3011 2/ 4011 2/	133-RG405 *		.550 (13.97 mm) maximum	.275 ±.010 (6.98 ±0.25 mm)
3012 2/ 4012 2/	130-RG402 *			

See notes at end of table.

TABLE I. Dash numbers, cross-reference, and dimensions – Continued.

Dash number M39012/82-	Applicable cable 1/ M17/	Tool number M22520/	Positioning dies M22520/	Locator pins 7/ M22520/36	Crimp dies M22520/5	Dimension A		Dimension B and (mounting)
						Before crimping 8/	After crimping	
CATEGORY F – FIELD REPLACEABLE (MIL-DTL-22520 CRIMP TOOL) 2/								
3207 9/ 4207 9/	133- RG405 *	36-01	36-02	-05, -17 or -22	--------	.750 (19.05 mm) maximum	.620 (15.7 mm) maximum	Not applicable 6/ (4 hole)
3208 9/ 4208 9/	130- RG402 *		36-03					
3210 4210	130- RG402 *	5-01	--------	--------	-05 or -41 cavity B	.691 (17.55 mm) maximum	.691 (17.55 mm) maximum	
3211 9/ 4211 9/	133- RG405 *	36-01	36-02	-05, -17 or -22	--------	.583 (14.81 mm) maximum	.505 (12.82 mm) maximum	Not applicable (4 hole)
3212 9/ 4212 9/	130- RG402 *		36-03					
3213 9/ 4213 9/	133- RG405 *	36-01	36-02	-05, -17 or -22	---------			Not applicable (2 hole)
3214 9/ 4214 9/	130- RG402 *		36-03					
3215 4215	133- RG405 *	5-01	--------	--------	05 or 41 cavity B	.511 (17.50 mm) maximum	.511 (17.50 mm) maximum	Not applicable (4 hole)
3216 4216								Not applicable (2 hole)

See notes at end of table.

TABLE I. Dash numbers, cross-reference, and dimensions – Continued.

* Cable to be used when performing test requiring cable. All cable dash numbers on this MIL-DTL-17 specification sheet accommodate this connector.

1/ MIL-DTL-17 cables are specified by the basic number. The latest version of each cable shall be applicable.

2/ These connectors have captivated center contacts.

3/ Kit number – Omni Spectra T-200, Amphenol 901-2500, or equivalent.

4/ All corrosion resistant steel bodied connectors shall be gold plated in accordance with ASTM B488, type II, code C, class 1.27, at least in the area of solder attachment.

5/ Inactive for new design. Not for Air Force or Navy use.

6/ This dimension is furnished in the manufacturers assembly instructions.

7/ The locators required shall be indicated in the assembly instructions.

8/ The A dimension before crimping determines the closeness of a bend in the cable to the rear of the connector.

9/ Not for Army use. For OEM use only.

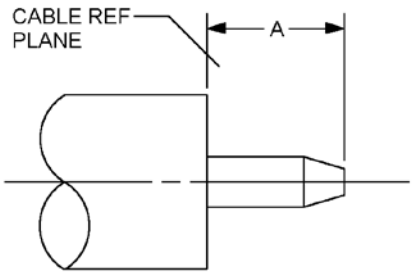

Cable *	Dimension "A"	
	Minimum	Maximum
M17/130-RG402	.080 (2.03 mm)	.090 (2.29 mm)
M17/133-RG405	.065 (1.65 mm)	.075 (1.91 mm)

* Dimensions apply to all cables on the specification sheets.

NOTES:

1. Dimensions are in inches.
2. Metric equivalents are given for general information only.
3. Tapering of center conductor is optional.

FIGURE 2. Cable stripping dimensions for category E and category F connectors.

ENGINEERING DATA:

Nominal impedance: 50 ohms.

Frequency range: 0 to 18 GHz.

Voltage rating: The voltage rating shall be in accordance with table II.

TABLE II. Voltage rating.

Cables	Voltage max. (sea level) V rms	Voltage max. (70,000 ft) V rms
M17/133-RG405 *	335	85
M17/130-RG402 *	500	125

* These voltages apply to all cable Part or Identifying Number (PIN) on these specification sheets even if not listed.

Temperature rating: -65°C to +165°C.

Category F: Connectors using semirigid cables with standard stripping dimensions and using standard military assembly tools. The method of assembly of the connector to the cable shall be solderless. See figure 2.

REQUIREMENTS:

Dimensions and configuration: See figure 1 and MIL-STD-348.
Force to engage and disengage:
Longitudinal force: Not applicable.
Torque: 2 inch-pounds, maximum.
Coupling proof torque: Not applicable.

Inspection conditions: For each test of threaded coupling connector where the test is performed on mated pairs, the pairs shall be torqued to 7 to 10 inch-pounds.

Mating characteristics: See MIL-STD-348 and figure 3 for dimensions.
Center contact (socket):
Oversize test pin: .0375 +.0001.
Test pin finish: 16 microinches.
Insertion depth: .030/.045 inch.
Number of insertions: 3
Insertion force test:
Steel test pin diameter: .0370 +.0001 inch.
Insertion depth: .050/.075 inch.
Test pin finish: 16 microinches.
Insertion force: 2 pounds, maximum.
Withdrawal force test:
Steel test pin diameter: .0355 -.0001 inch.
Insertion depth: .050/.075 inch.
Test pin finish: 16 microinches.
Withdrawal force: 1 ounce, minimum.

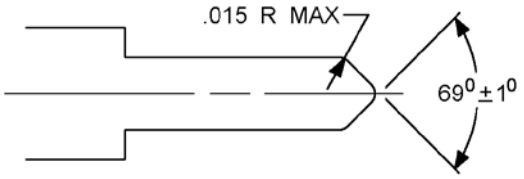

Inches	mm
.015	.38

NOTES:
1. Dimensions are in inches.
2. Metric equivalents are given for general information only.

FIGURE 3. Test pin dimensions.

Hermetic seal: Not applicable.

Leakage (pressurized connectors): Not applicable.

Insulation resistance: In accordance with MIL-STD-202-302, test condition B, 5,000 megohms minimum.

Center contact retention:

Axial force: 6 pounds, minimum axial force. Applicable to captivated center contacts only.

Radial torque: Not applicable.

Salt atmosphere (corrosion): In accordance with MIL-STD-202-101, test condition B.

Voltage standing wave ratio (VSWR): From 500 MHz to 12.4 GHz, or approximately 80 percent of the upper cutoff frequency of the cable, whichever is lower.

Cable group	VSWR	
	Captive	Non-captive
M17/133-RG405*	1.07 +0.01F (F in GHz)	1.07 +0.008F (F in GHz)
M17/130-RG402*	1.05 +0.01F (F in GHz)	1.05 +0.008F (F in GHz)

* VSWR values apply to all cable PINs on these specification sheets even if not listed.

Swept frequency VSWR test setup:

Item 6: VSWR shall be less than 1.025 +.002F (F in GHz).

Item 16: VSWR shall be less than 1.025 +.002F (F in GHz).

Second step of VSWR checkout procedure – VSWR shall be less than 1.080 +.005F (F in GHz).

Group B inspection: Use step 5, long cable method.

Qualification and group C inspection: Use step 5, long cable method.

Connector durability: 500 cycles minimum at 12 cycles per minute maximum. The connector shall meet mating characteristics and force to engage and disengage requirements.

Contact resistance: In milliohms, maximum.

	Initial	After environment
Center contact:	3.0	4.0
Outer contact:	2.0	Not applicable
Braid to body:	.5	Not applicable

NOTE: Five milliohms are permissible on passivated steel bodied connectors.

Dielectric withstanding voltage at sea level: In accordance with MIL-STD-202-301.

Cable group	V rms
M17/133-RG405 *	1,000
M17/130-RG402 *	1,500

* Values apply to all cable PINs on these specification sheets even if not listed.

Vibration, high frequency: In accordance with MIL-STD-202-204, test condition D, except the method of mounting shall be approved by the qualifying activity .

Shock: In accordance with MIL-STD-202-213, test condition I.

Thermal shock: In accordance with MIL-STD-202-107, test condition B, except test high temperature shall be +115°C.

Moisture resistance: In accordance with MIL-STD-202-106. No measurements at high humidity. Insulation resistance shall be at least 200 megohms within 5 minutes after removal from humidity.

Corona level:

Altitude: 70,000 feet.

Cable group	Volts, min.
M17/133-RG405 *	250
M17/130-RG402 *	375

* Values apply to all cable PINs on these specification sheets even if not listed.

RF high potential withstanding voltage:

Voltage and frequency: Tested at a frequency from 5 to 7.5 MHz.

Leakage current: Not applicable.

Cable group	Volts, min.
M17/133-RG405 *	670
M17/130-RG402 *	1,000

* Values apply to all cable PINs on these specification sheets even if not listed.

Cable retention force: The cable retention force shall be specified in table III.

TABLE III. Cable retention force.

Cable *	Pounds (minimum)	Torque 1/ Inch-ounces
M17/133-RG405	30	16
M17/130-RG402	60	55

* Values apply to all cable PINs on the specification sheets, even if not listed.
1/ Torque to be applied 4 inches maximum from the end of the connector. Reverse bend not applicable.

Coupling mechanism retention force: Not applicable.

RF leakage: -90 dB minimum, tested at frequency between 2 and 3 GHz..

RF insertion loss: .03 $\sqrt{F(GH_z)}$ dB maximum tested at 9 to 12.4 GHz.

Supplemental test requirements for qualification and group C inspection for category F connectors.

Six additional connectors shall be selected from the production lot and terminated to produce three cable leads, twelve inches minimum, sixteen inches maximum. The three assemblies shall be subjected to the following tests in sequence: VSWR, thermal shock, VSWR, and cable retention.

The following exceptions to the requirements apply to this supplemental test only:

VSWR of the cable assembly: From 0.5 to 18 GHz.

Test cable assembly	VSWR (initial)	VSWR (after thermal shock)
M17/133-RG405 *	1.15 +.023F (F in GHz)	1.15 +.028F (F in GHz)
M17/130-RG402 *	1.10 +.023F (F in GHz)	1.10 +.025F (F in GHz)

* Values apply to all cable PINs on these specification sheets even if not listed.

Thermal shock: 10 cycles.

Group qualification: See table IV.

PIN: M39012/82 (dash number from table I or “B” number from table V).

Maintenance replacements for category B: See table VI.

PIN cross-reference: See table VII.

TABLE IV. Group qualification and retention testing. 1/

Group	Submission and qualification of any of the following dash numbers 2/ M39012/	Qualifies the following dash numbers M39012/
I	81-*02 82-*02 83-*02	81-*01 81-*02 82-*01 82-*02 83-*01 83-*02
II	81-*04 82-*04 83-*04	81-*03 81-*04 82-*03 82-*04 83-*03 83-*04
III	81-*06 82-*06 83-*06	81-*05 81-*06 82-*05 82-*06 83-*05 83-*06
IV	81-*08 82-*08 83-*08	81-*07 81-*08 82-*07 82-*08 83-*07 83-*08
V	81-*10 82-*10 83-*10	81-*09 81-*10 82-*09 82-*10 83-*09 83-*10
VI	81-*208 82-*208 83-*208	81-*207 81-*208 82-*207 82-*208 83-*207 83-*208
VII	81-*210 82-*210 83-*210	81-*210 81-*213 82-*210 82-*213 83-*210 83-*213

See notes at end of table.

TABLE IV. Group qualification and retention testing – Continued. 1/

1/ If a connector manufacturer produces a connector which meets all the requirements for two or more connector PINs (within the same series), the manufacturer may receive qualification approval for two or more connector PINs by qualifying the one connector. It is not necessary that such connectors be in the same group. Each connector, however, must be marked with its own appropriate PIN. For group qualification, the connectors must be of similar design.

2/ For qualification retention, where more than one part is listed in a group in this column, data may be supplied on any of those parts in order to retain qualification for those parts in the corresponding right-hand column. The part does not necessarily have to be the part initially qualified. Qualification of connectors qualifies connectors of the same body material and finish only.

* Denotes body material and connector requirement.

TABLE V. Category B – non-field replaceable (special tools may be required). 1/

NOT FOR ARMY, NAVY, OR AIR FORCE USE. FOR OEM USE ONLY.

M39012/82B 2/	Applicable cable 3/	Dimension A Maximum 6/
3001 4/	M17/133-RG405 *	.850 (21.59 mm)
3002 4/	M17/130-RG402 *	
3003 5/ 4003 5/	M17/133-RG405 *	
3004 5/ 4004 5/	M17/130-RG402 *	

* Cable to be used when performing tests requiring cable. All cable PINs on this specification sheet shall accommodate this connector.
1/ Dimension B shown on figure 1 is not applicable to these connectors.
2/ All corrosion resistant steel bodied connectors which are designed to be assembled to the outer conductor using solder shall be gold plated in accordance with ASTM B488, type II, code C, class 1.27.
3/ MIL-DTL-17 cables are specified by the basic number. The latest version of each cable shall be applicable.
4/ In active for new design.
5/ These connectors have captivated center contacts.
6/ Dimensions are in inches. Metric equivalents are given for information only.

TABLE VI. Maintenance replacements for category B.

Category B number 1/	Category E dash number
B3001	3005
B3002	3006
B3003	3007
B4003	4007
B3004	3008
B4004	4008

1/ Category B connectors are for original installation only. They will not be stocked or procured by the government.

TABLE VII. Supersession data.

Preferred PIN 1/ M39012/82	Superseded PINs or type designation M39012/82
B3001	-3001
B3002	-3002
B3003	-3801, -3803, -3003
B3004	-3802, -3804, -3004
B4003	-4801, -4803, -4001, -4003
B4004	-4802, -4804, -4002, -4004
-3007	-3805, -3807
-3008	-3806, -3808
-3013	85022SSGA
-3014	85022SSG
-4007	-4805, -4807
-4008	-4806, -4808

1/ The connectors that are in stock or distribution that were previously marked with the old PINs shall also be considered acceptable for Government use until connector stock is purged. Applies to category B PINs change only. (i.e., M39012/82-3001 to M39012/82B3001).

Amendment notations. The margins of this specification are marked with vertical lines to indicate modifications generated by this amendment. This was done as a convenience only and the Government assumes no liability whatsoever for any inaccuracies in these notations. Bidders and contractors are cautioned to evaluate the requirements of this document based on the entire content irrespective of the marginal notations.

Referenced document. In addition to MIL-PRF-39012, this document references the following:

MIL-DTL-17	MIL-STD-202-101	MIL-STD-202-301
MIL-DTL-22520	MIL-STD-202-106	MIL-STD-202-302
MIL-STD-348	MIL-STD-202-107	FED-STD-H28
	MIL-STD-202-204	ASTM B488
	MIL-STD-202-213	

CONCLUDING MATERIAL

Custodians:
Army - CR
Navy - EC
Air Force - 85
NASA - NA
DLA - CC

Review activities:
Army - AM, AT, CR4, MI
Navy - AS, MC, OS, SH
Air Force - 19, 99

Preparing activity:
DLA - CC

(Project 5935-2016-174)

NOTE: The activities listed above were interested in this document as of the date of this document. Since organizations and responsibilities can change, you should verify the currency of the information above using the ASSIST Online database at https://assist.dla.mil/.