INCH-POUND

MIL-PRF-39012/76D
w/AMENDMENT 1
14 October 2016
SUPERSEDING
MIL-PRF-39012/76D
16 November 2011

PERFORMANCE SPECIFICATION SHEET

CONNECTORS, RECEPTACLES, ELECTRICAL, COAXIAL, RADIO FREQUENCY, SERIES SMC (CABLED, PIN CONTACT, JAMNUT MOUNTED, REAR MOUNTED, CLASS 2)

This specification is approved for use by all Departments and Agencies of the Department of Defense.

The requirements for acquiring the product described herein shall consist of this specification sheet and MIL-PRF-39012.

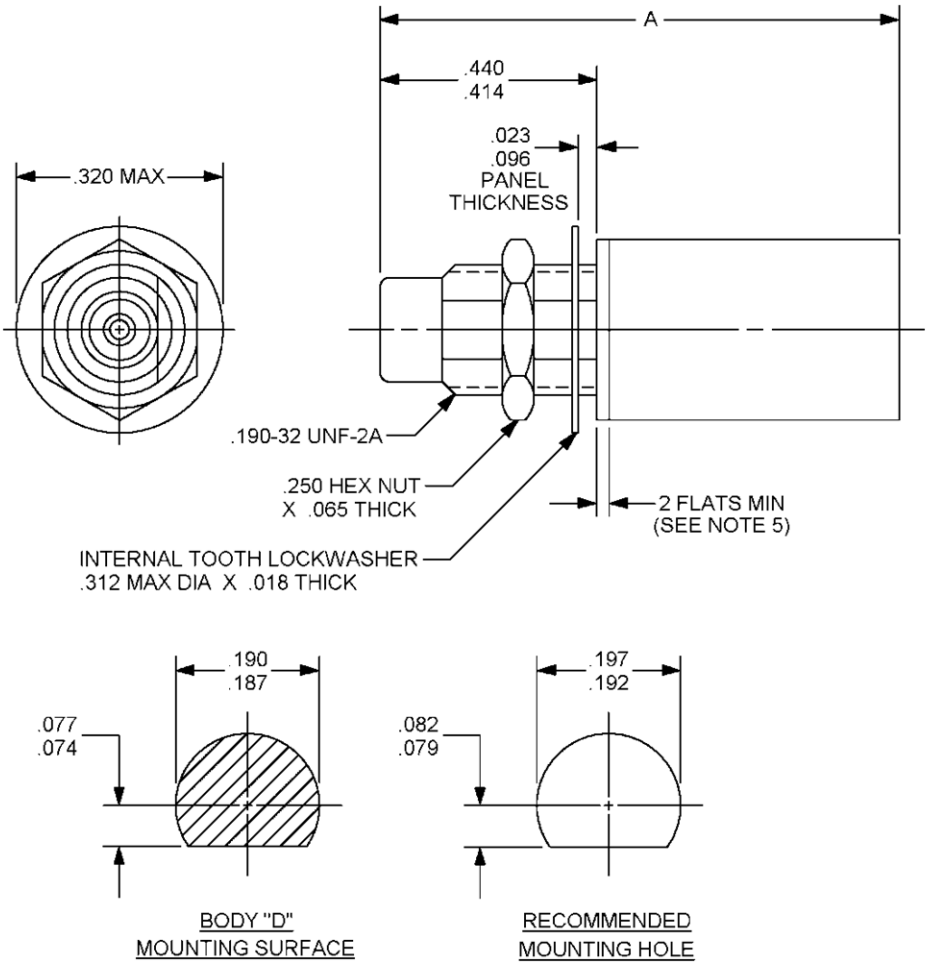

FIGURE 1. General configuration.

AMSC N/A

FSC 5935

Inches	mm	Inches	mm
.018	0.46	.190	4.83
.023	0.58	.192	4.88
.074	1.88	.197	5.00
.077	1.95	.250	6.35
.079	2.01	.312	7.92
.082	2.08	.320	8.13
.096	2.44	.414	10.51
.187	4.75	.440	11.18

NOTES:
1. Dimensions are in inches.
2. Metric equivalents are given for information only.
3. For dimension A, see table I.
4. Dimension A defines the overall length of the connector when assembled to the cable.
5. Wrench flats are to accommodate standard wrench opening in accordance with FED-STD-H28, appendix 10.
6. Maximum overall diameter of the connector is .320 inch (8.13 mm).
7. All undimensioned pictorial configurations are for reference purposes only.
8. Series SMC, pin contact interface in accordance with MIL-STD-348.

FIGURE 1. General configuration – Continued.

TABLE I. Dash numbers, cross-reference, and dimensions.

Dash No. M39012/76	# Applicable cable group from MIL-PRF-39012, appendix B M17/	Typical mating Connector 1/	Dimensions	Inches (millimeters) Maximum 2/
CATEGORY A – FIELD SERVICEABLE (NO SPECIAL TOOLS REQUIRED)				
0003 3/ 4/	Cable group I 93-RG178 * @ 169-00001 %	M39012/73-0003 M39012/75-0003	A	.88 (22.35)
0004 3/ 4/	Cable group II 113-RG316 * @ 172-00001 % 94-RG179 ^	M39012/73-0004 M39012/75-0004		
0103 3/	Cable group I 93-RG178 * @ 169-00001 %	M39012/73-0103 M39012/75-0103		
0104 3/	Cable group II 113-RG316 * @ 172-00001 % 94-RG179 ^	M39012/73-0104 M39012/75-0104	A	.88 (22.35)
0105 3/	M17/95-RG180	M39012/75-0105		
4101 3/	Cable group I 93-RG178 * @ 169-00001 %	M39012/73-4101 M39012/75-4101		
4102 3/	Cable group II 113-RG316 * @ 172-00001 % 94-RG179 ^	M39012/73-4102 M39012/75-4102		

See notes at end of table.

TABLE I. Dash numbers, cross-reference, and dimensions – Continued.

Dash No. M39012/76	# Applicable cable group from MIL-PRF-39012, appendix B M17/	Typical mating Connector 1/	Dimensions	Inches (millimeters) Maximum 2/
CATEGORY C – FIELD REPLACEABLE (MIL-C-22520/5 CRIMP TOOL) 5/				
0011 3/ 4/	Cable group I ~ 93-RG178 * @ 169-00001 %	M39012/73-0011 M39012/75-0011	A	1.20 (30.48)
0012 3/ 4/	Cable group IIa & 113-RG316 * @ 172-00001 % 94-RG179 ^	M39012/73-0012 M39012/75-0012		
0013 3/	M17/95-RG180 * $	M39012/73-0013 M39012/75-0013		
0017 3/	Cable group I ~ 93-RG178 * @ 169-00001 %	M39012/73-0017 M39012/75-0017	A	1.20 (30.48)
0018 3/	Cable group IIa & 113-RG316 * @ 172-00001 % 94-RG179 ^	M39012/73-0018 M39012/75-0018		
4001 3/	Cable group I ~ 93-RG178 * @ 169-00001 %	M39012/73-4001 M39012/75-4001	A	1.10 (27.94)
4002 3/	Cable group IIa & 113-RG316 * @ 172-00001 % 94-RG179 ^	M39012/73-4002 M39012/75-4002		

1/ Mating connector Part or Identifying Number (PIN) is for reference only. All mating connectors may not be listed.
2/ Dimensions are in inches. Metric equivalents are given for information only.
3/ These connectors have captivated center contacts.
4/ Connector bodies shall be gold plated in accordance with ASTM B488, type II, code C, class 1.27.
5/ Category C connectors are assembled by means of the applicable crimping tool in accordance with MIL-DTL-22520 to the specified cable stripped as specified on figure 2.
The latest version of each cable shall be applicable.
* Cable to be used when performing tests requiring cable except as in notes @ and ^.
@ Cable to be used for the +200°C thermal shock tests.
^ These are not 50 ohm cables, therefore, when attached to the specified connectors, VSWR, RF leakage and insertion loss are not applicable.
~ M22520/5-33 closure B or M22520/5-03 closure B.
& M22520/5-35 closure B or M22520/5-03 closure A.
$ M22520/5-41 closure B or M22520/5-05 closure B or M22520/5-09 closure A.
% Caution is directed to the applicable of this cable above 400 MHz. Attenuation is tested only at 400 MHz. SRL and power handling capabilities are not stipulated herein.

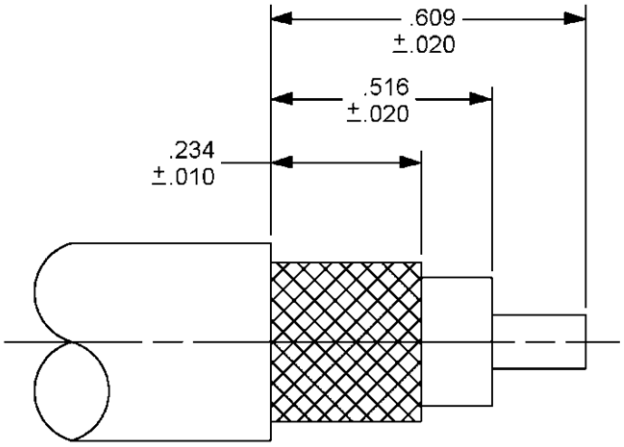

Inches	mm
.010	0.25
.020	0.51
.234	5.94
.516	13.11
.609	15.47

NOTES:
1. Dimensions are in inches.
2. Metric equivalents are given for information only.

FIGURE 2. Cable stripping dimensions for category C connectors.

ENGINEERING DATA:

Nominal impedance: 50 ohms.
Frequency range: 0 to 10 GHz.
Voltage rating: The voltage rating shall be as specified in table II.

TABLE II. Voltage rating.

Cables	Voltage max. (sea level) V rms	Voltage max. at 70,000 ft. (4.437 kPa) V rms
Cable group I	250	60
Cable group II, IIa,	335	85

Temperature rating: -65°C to +165°C.

REQUIREMENTS:

Dimensions and configuration: See figure 1 and MIL-STD-348.
Force to engage and disengage:
Longitudinal force: Not applicable.
Torque: 16 inch-ounces (.11 Nm), maximum.

Coupling proof torque: Not applicable.
Inspection conditions: Torque 35 to 50 inch-ounces (.25 to .35 Nm).
Mating characteristics: See MIL-STD-348.
Hermetic seal: Not applicable.
Leakage (pressurized connectors): Not applicable.

Insulation resistance: In accordance with MIL-STD-202-302, test condition B, 1,000 megohms minimum.

Center contact retention:
Axial force: 4 pounds (17.79 N), minimum axial force. Applicable to captivated center contacts only.
Radial torque: Not applicable.

Salt atmosphere (corrosion): In accordance with MIL-STD-202-101, test condition B.

Voltage standing wave ratio (VSWR): From 500 MHz to 10 GHz, or approximately 80 percent of the upper cutoff frequency of the cable, whichever is lower.

Cable group	VSWR
I	1.25 + 0.04 (F) GHz
II, IIa,	1.20 + 0.04 (F) GHz

Swept frequency VSWR test setup:

Item 6: VSWR shall be less than 1.05 +.0025F (F in GHz).
Item 16: VSWR shall be less than 1.05 +.0025F (F in GHz).
Second step of VSWR checkout procedure – VSWR shall be less than 1.10 +.01F (F in GHz).
Group B inspection: VSWR shall be less than 1.08 +.017F (F in GHz).
Qualification and group C inspection: VSWR shall not exceed 1.15.

Connector durability: 500 cycles minimum at 12 cycles per minute maximum. The connector shall meet mating characteristics and force to engage and disengage requirements.

Contact resistance: In milliohms, maximum.

	Initial	After environment
Center contact:	6.0	8.0
Outer contact:	1.0	1.5
Braid to body:	1	Not applicable

Dielectric withstanding voltage at sea level: In accordance with MIL-STD-202-301.

Cable group	V rms (at sea level)
I	750
II, IIa	1,000

Vibration, high frequency: In accordance with MIL-STD-202-204, test condition D.
Shock: In accordance with MIL-STD-202-213, test condition C.
Thermal shock: In accordance with MIL-STD-202-107, test condition B, except test high temperature shall be +85°C. High temperature shall be +200°C for connectors using +200°C cables (see tables I and III).

Moisture resistance: Not applicable.
Corona level:
Altitude: 70,000 feet (4.437 kPa).

Cable group	Volts, min.
I	185
II, IIa	250

RF high potential withstanding voltage:
Voltage and frequency: Tested at a frequency from 5 to 7.5 MHz.
Leakage current: Not applicable.

Cable group	Volts, rms min.
I	500
II, IIa	700

Cable retention force: The cable retention force shall be as specified in table III.

TABLE III. Cable retention force. 1/ 2/

Cable dielectric Outer diameter	Pounds, min. (N)	
	Non-crimp Single braid	Crimp Single braid
	Center contact	Center contact
	Captive	Captive
Inches, max. (mm)		
.036 (0.91)	13 (57.83)	13 (57.83)
.066 (1.68)	25 (111.20)	25 (111.20)

1/ Dimensions are in inches.
2/ Metric equivalents are given for information only.

Coupling mechanism retention force: Not applicable.
RF leakage: -60 dB minimum, tested at frequency between 2 and 3 GHz..
RF insertion loss: .25 dB maximum tested at 4 GHz.
PIN: M39012/76 (dash number from table I or IV as applicable).
Group qualification: See table V.
Cross-reference of PINs: See table VI.
Maintenance replacements for category B: See table VII.

TABLE IV. Category B – Non-field replaceable (Special tools may be required).

NOT FOR ARMY, NAVY, OR AIR FORCE USE. FOR OEM USE ONLY

Dash no. 1/ M39012/76	# Applicable cable group from MIL-PRF-39012, appendix B M17/	Typical mating connector 2/	Dimensions	Inches (millimeters) maximum 5/ 6/
B0008 3/ 4/	93-RG178 * @ 169-00001 %	M39012/73B0008 M39012/75B0008	A	1.20 (30.48)
B0009 3/ 4/	113-RG316 * @ 172-00001 % 119-RG174 173-00001 %	M39012/73B0009 M39012/75B0009		
B0010 3/ 4/	M17/94-RG179 ^ * @	M39012/73B0010 M39012/75B0010		
B0014 3/	93-RG178 * @ 169-00001 %	M39012/73B0010 M39012/75B0010		
B0015 3/	113-RG316 * @ 172-00001 % 119-RG174 173-00001 %	M39012/73B0008 M39012/75B0008		
B0016 3/	94-RG179 ^ @ *	M39012/73B0010 M39012/75B0010		

1/ For cross-reference of dash number to superseded PIN or type designation, see table VI.
2/ Mating connector PINs are for reference only. All mating connectors may not be listed.
3/ These connectors have captive center contacts.
4/ Connector bodies shall be gold plated in accordance with ASTM B488, type II, code C, class 1.27.
5/ Dimensions are in inches.
6/ Metric equivalents are given for information only.
The latest version of each cable shall be applicable.
* Cable to be used when performing tests requiring cable except as in note @.
@ Cable to be used for the +200°C thermal shock tests.
% Caution is directed to the application of this cable above 400 MHz. Attenuation is tested only at 400 MHz. SRL and power handling capabilities are not stipulated herein.
^ These are not 50 ohm cables, therefore, when attached to the specified connectors, VSWR, RF leakage and insertion loss are not applicable.

NOTE: Connectors mate with connectors of the same material only; Example: M39012/68-3001 mates with M39012/67-3001, and M39012/68-4001 mates with M39012/67-4001.

TABLE V. Group qualification and retention testing.

Group	Submission and retention of Qualification of any of the following connectors 1/ M39012/	Qualifies the following connectors M39012/
I	74-0003 76-0003	74-0003 74-0103 2/ 76-0003 76-0103 2/
II	74-0004 76-0004	74-0004 74-0104 2/ 76-0004 76-0104 2/
III	74B0008 76B0008	74B0008 74B0014 2/ 76B0008 76B0014 2/
IV	74B0009 76B0009	74B0009 74B0010 74B0015 2/ 74B0016 2/ 76B0009 76B0010 76B0015 2/ 76B0016 2/
V	74B0010 76B0010	74B0010 74B0016 2/ 76B0010 76B0016 2/
VI	74-0011 76-0011	74-0011 74-0017 2/ 76-0011 76-0017 2/
VII	74-0012 76-0012	74-0012 74-0018 2/ 76-0012 76-0018 2/
VIII	74-0013 76-0013	74-0013 76-0013

1/ Individual connectors other than listed are self qualifying only.
2/ Corrosion and contact resistance test data must be submitted to DSCC-VQ before qualification approval may be granted.

NOTES:

1. If a connector manufacturer produces a connector which meets all the requirements for two or more connector PINs (within the same series), the manufacturer may receive qualification approval for two or more connector PINs by qualifying the one connector. It is not necessary that such connectors be in the same group. Each connector, however, must be marked with its own appropriate PIN. For group qualification, the connectors must be of similar design.
2. For qualification retention, where more than one part is listed in a group in this column, data may be supplied on any of those parts in order to retain qualification for those parts in the corresponding right-hand column. The part does not necessarily have to be the part initially qualified.

TABLE VI. Cross reference of PIN.

Preferred PIN M39012/74 1/	Substitute for PIN or type designation
-0003	M39012/74-0001
-0004	M39012/74-0002
B0008	M39012/74-0008, M39012/74-0005
B0009	M39012/74-0009, M39012/74-0006
B0010	M39012/74-0010, M39012/74-0007

1/ The “B” PIN is required marking for connectors manufactured after 24 March 1987. The connectors that are in stock or distribution that were previously qualified and marked with the old PIN shall also be considered acceptable for Government use until stock is purged. (Applies to category “B” PIN change only; M39012/XXBXXXX).

TABLE VII. Maintenance replacements for category B.

Category B number 1/	Category C dash number	Category A dash number
B0008	0011	0003
B0009	0012	0004
B0010	0012	0004
B0014	0017	0103
B0015	0018	0104
B0016	0018	0104

1/ Category B connectors are for original installation only. They will not be stocked or procured by the government.

Amendment notations. The margins of this specification are marked with vertical lines to indicate modifications generated by this amendment. This was done as a convenience only and the Government assumes no liability whatsoever for any inaccuracies in these notations. Bidders and contractors are cautioned to evaluate the requirements of this document based on the entire content irrespective of the marginal notations.

Referenced documents. In addition to MIL-PRF-39012, this document references the following:

FED-STD-H28	MIL-STD-202-204	MIL-STD-348
MIL-STD-202-101	MIL-STD-202-213	MIL-DTL-22520
MIL-STD-202-107	MIL-STD-202-301	MIL-C-22520/5
	MIL-STD-202-302	ASTM B488

CONCLUDING MATERIAL

Custodians:
Army - CR
Navy - EC
Air Force - 85
NASA - NA
DLA - CC

Review activities:
Army - AT, CR4, MI
Navy - AS, MC, OS, SH
Air Force - 19, 99

Preparing activity:
DLA - CC

(Project 5935-2016-170)

NOTE: The activities listed above were interested in this document as of the date of this document. Since organizations and responsibilities can change, you should verify the currency of the information above using the ASSIST Online database at https://assist.dla.mil .