INCH-POUND

MIL-PRF-39003/10D
w/AMENDMENT 1
8 April 2010
SUPERSEDING
MIL-PRF-39003/10D
10 December 2009

PERFORMANCE SPECIFICATION SHEET

CAPACITORS, FIXED, ELECTROLYTIC (SOLID ELECTROLYTE), TANTALUM, (POLARIZED, SINTERED SLUG), ESTABLISHED RELIABILITY, STYLES CSS13 AND CSS33 (HIGH RELIABILITY APPLICATIONS)

This specification is approved for use by all Departments and Agencies of the Department of Defense.

The requirements for acquiring the product described herein shall consist of this specification and MIL-PRF-39003.

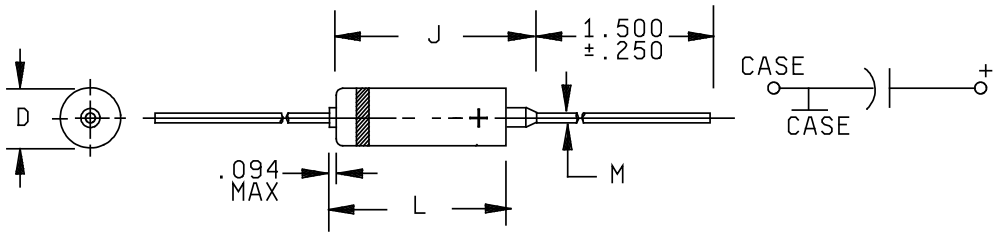

Case Size	Dimensions					
	Insulated		Uninsulated		M ±.002	J max
	L ±.031	D +.016 -.015	L ±.031	D +.016 -.015		
A	.286	.135	.250	.125	.020	.422
B	.474	.185	.438	.175	.020	.610
C	.686	.289	.650	.279	.025	.822
D	.786	.351	.750	.341	.025	.922

Inches	mm	Inches	mm
.002	0.05	.341	8.66
.015	0.38	.351	8.92
.016	0.41	.422	10.72
.020	0.51	.438	11.13
.025	0.64	.474	12.04
.031	0.79	.610	15.49
.094	2.39	.650	16.51
.125	3.18	.686	17.42
.135	3.43	.750	19.05
.175	4.45	.786	19.96
.185	4.70	.822	20.88
.250	6.35	.922	23.42
.279	7.09	1.500	38.10
.286	7.26		
.289	7.34		

NOTES:
1. Dimensions are in inches.
2. Metric equivalents are given for general information only.
3. The case insulation shall extend .015 (0.38 mm) minimum beyond each end. However, when a shrink-fitted insulation is used, it shall lap over the ends of the capacitor body.
4. Lead length may be a minimum of 1-inch long for use in tape and reel automatic insertion equipment, when specified.
5. Black band to indicate negative end of case.

FIGURE 1. Dimensions and configurations.

REQUIREMENTS

Design and construction:

Dimensions and configuration: See figure 1.

Case type: Tubular, insulated or uninsulated.

Material: Metal (alloy unspecified).

Type of seal: Hermetic.

Leads: Solderable.

DC rated voltage: See table I and table II. Above +85°C voltage derating is required.

(see MIL-PRF-39003)

DC leakage (DCL): See table I and table II.

Capacitance (Cap.) (nom): See table I and table II.

Cap. tolerance: See table I and table II.

Dissipation factor (DF): See table I and table II.

Equivalent series resistance (ESR) at 100 kHz: See table I and table II.

Operating temperature: -55°C to +85°C, derated to +125°C.

Failure rate level: See table I and table II.

Stability at low and high temperatures: In accordance with MIL-PRF-39003.

Step 1 (+25°C):

DCL: See table I and table II.

Cap.: Within tolerance of table I value.

DF: See table I and table II.

Step 2 (-55°C):

Cap.: Shall not change more than ±10 percent of step 1 measured value.

DF: See table I and table II.

Step 3 (+25°C):

DCL: See table I and table II.

Cap.: Shall not change more than ±2 percent of step 1 measured value.

DF: See table I and table II.

Step 4 (+85°C):

DCL: See table I and table II.

Cap.: Shall not change more than ±8 percent of step 1 measured value.

DF: See table I and table II.

Step 5 (+125°C):

DCL: See table I and table II.

Cap.: Shall not change more than ±12 percent of step 1 measured value.

DF: See table I and table II.

Step 6 (+25°C):

DCL: See table I and table II.

Cap.: Shall not change more than ±2 percent of step 1 measured value.

DF: See table I and table II.

TABLE I. Style CSS13 electrical characteristics and dash numbers.

DC Rated voltage	Cap (nom) ±10%	ESR +25°C Max(100 kHz)	DC Leakage at			Dissipation factor		Case size	PIN M39003/10- Failure rate level for (%/1,000 hours)1/	
			+25°C Max	+85°C Max	+125°C Max	-55°C +25°C Max	+85°C +125°C Max		B (0.1)	C (0.01)
volts	uF	ohms	uA	uA	uA	percent	percent			
6	5.6	0.90	.3	6.0	7.5	4	4	A	2001-	3001-
6	6.8	0.80	.3	6.0	7.5	6	6	A	2002-	3002-
6	47.0	0.24	1.5	24.0	30.0	6	6	B	2003-	3003-
6	56.0	0.24	1.5	24.0	30.0	6	6	B	2004-	3004-
6	150.0	0.09	4.5	90.0	113.0	8	8	C	2005-	3005-
6	180.0	0.08	5.5	110.0	138.0	8	8	C	2006-	3006-
6	270.0	0.07	6.5	130.0	163.0	8	8	D	2007-	3007-
6	330.0	0.06	7.5	150.0	188.0	8	8	D	2008-	3008-
10	3.9	1.00	.3	6.0	7.5	4	4	A	2009-	3009-
10	4.7	0.90	.4	7.0	8.8	4	4	A	2010-	3010-
10	27.0	0.25	2.0	40.0	50.0	6	6	B	2011-	3011-
10	33.0	0.24	2.5	50.0	63.0	6	6	B	2012-	3012-
10	39.0	0.24	2.5	50.0	63.0	6	6	B	2013-	3013-
10	82.0	0.12	4.0	80.0	100.0	6	6	C	2014-	3014-
10	100.0	0.11	5.0	100.0	125.0	8	8	C	2015-	3015-
10	120.0	0.10	6.0	120.0	150.0	8	8	C	2016-	3016-
10	180.0	0.08	9.0	180.0	226.0	8	8	D	2017-	3017-
10	220.0	0.07	10.0	200.0	250.0	8	8	D	2018-	3018-
15	2.7	1.20	.3	6.0	7.5	4	4	A	2019-	3019-
15	3.3	1.00	.4	8.0	10.0	4	4	A	2020-	3020-
15	18.0	0.27	2.0	35.0	44.0	6	6	B	2021-	3021-
15	22.0	0.26	2.0	40.0	50.0	6	6	B	2022-	3022-
15	56.0	0.15	4.0	80.0	100.0	6	6	C	2023-	3023-
15	68.0	0.13	5.0	100.0	125.0	6	6	C	2024-	3024-
15	120.0	0.09	9.0	180.0	226.0	8	8	D	2025-	3025-
15	150.0	0.09	10.0	220.0	250.0	8	8	D	2026-	3026-

See footnote at end of table.

TABLE I. Style CSS13 electrical characteristics and dash numbers – Continued.

DC Rated voltage	Cap (nom) ±10%	ESR +25°C Max(100 kHz)	DC Leakage at +25°C Max	DC Leakage at +85°C Max	DC Leakage at +125°C Max	Dissipation factor -55°C +25°C Max	Dissipation factor +85°C +125°C Max	Case size	PIN M39003/10- Failure rate level for (%/1,000 hours)1/ B (0.1)	PIN M39003/10- Failure rate level for (%/1,000 hours)1/ C (0.01)
volts	uF	ohms	uA	uA	uA	percent	percent			
20	1.2	1.40	.3	6.0	7.5	4	4	A	2027-	3027-
20	1.5	1.30	.3	6.0	7.5	4	4	A	2028-	3028-
20	1.8	1.25	.3	6.0	7.5	4	4	A	2029-	3029-
20	2.2	1.20	.4	8.0	10.0	4	4	A	2030-	3030-
20	8.2	.39	1.0	20.0	25.0	6	6	B	2031-	3031-
20	10.0	0.35	1.5	30.0	38.0	6	6	B	2032-	3032-
20	12.0	0.32	1.8	35.0	44.0	6	6	B	2033-	3033-
20	15.0	0.29	2.0	40.0	50.0	6	6	B	2034-	3034-
20	27.0	0.21	2.5	50.0	63.0	6	6	C	2035-	3035-
20	33.0	0.19	3.5	70.0	88.0	6	6	C	2036-	3036-
20	39.0	0.17	4.0	80.0	100.0	6	6	C	2037-	3037-
20	47.0	0.16	4.5	90.0	113.0	6	6	C	2038-	3038-
20	56.0	0.13	5.5	110.0	138.0	6	6	D	2039-	3039-
20	68.0	0.12	7.0	140.0	175.0	6	6	D	2040-	3040-
20	82.0	0.11	8.0	160.0	200.0	6	6	D	2041-	3041-
20	100.0	0.10	10.0	200.0	250.0	8	8	D	2042-	3042-
35	5.6	0.47	1.3	25.0	32.0	4	4	B	2043-	3043-
35	6.8	0.43	1.5	30.0	38.0	6	6	B	2044-	3044-
35	22.0	0.25	4.0	40.0	100.0	6	6	C	2045-	3045-
35	27.0	0.18	4.5	90.0	113.0	6	6	D	2046-	3046-
35	33.0	0.17	5.5	110.0	138.0	6	6	D	2047-	3047-
35	39.0	0.15	7.0	140.0	175.0	6	6	D	2048-	3048-
35	47.0	0.14	8.0	160.0	200.0	6	6	D	2049-	3049-

See footnote at end of table.

TABLE I. Style CSS13 electrical characteristics and dash numbers – Continued.

DC Rated voltage	Cap (nom) ±10%	ESR +25°C Max(100 kHz)	DC Leakage at +25°C Max	DC Leakage at +85°C Max	DC Leakage at +125°C Max	Dissipation factor -55°C +25°C Max	Dissipation factor +85°C +125°C Max	Case size	PIN M39003/10- Failure rate level for (%/1,000 hours)1/ B (0.1)	PIN M39003/10- Failure rate level for (%/1,000 hours)1/ C (0.01)
volts	uF	ohms	uA	uA	uA	percent	percent			
50	.12	6.50	.3	5.0	6.3	2	4	A	2067-	3067-
50	.15	5.50	.3	5.0	6.3	2	4	A	2068-	3068-
50	.18	5.00	.3	5.0	6.3	2	4	A	2069-	3069-
50	.22	4.00	.3	5.0	6.3	2	4	A	2070-	3070-
50	.27	3.50	.3	5.0	6.3	2	4	A	2071-	3071-
50	.33	3.30	.3	5.0	6.3	2	4	A	2072-	3072-
50	.39	3.20	.3	5.0	6.3	2	4	A	2073-	3073-
50	.47	3.00	.3	5.0	6.3	2	4	A	2074-	3074-
50	.56	2.50	.3	5.0	6.3	2	4	A	2075-	3075-
50	.68	1.80	.3	5.0	6.3	2	4	A	2076-	3076-
50	.82	1.60	.3	5.0	6.3	2	4	A	2077-	3077-
50	1.0	1.40	.4	8.0	10.0	2	4	A	2078-	3078-
50	1.2	1.20	.4	9.0	11.0	4	4	B	2079-	3079-
50	1.5	1.10	.6	12.0	15.0	4	4	B	2080-	3080-
50	1.8	0.92	.7	14.0	18.0	4	4	B	2081-	3081-
50	2.2	0.80	.8	17.0	22.0	4	4	B	2082-	3082-
50	2.7	0.68	1.0	20.0	25.0	4	4	B	2083-	3083-
50	3.3	0.62	1.2	25.0	32.0	4	4	B	2084-	3084-
50	3.9	0.56	1.5	30.0	38.0	4	4	B	2085-	3085-
50	4.7	0.51	1.7	35.0	44.0	4	4	B	2086-	3086
50	5.6	0.44	2.2	45.0	56.0	4	4	C	2087-	3087-
50	6.8	0.40	2.2	45.0	56.0	6	6	C	2088-	3088-
50	8.2	0.36	2.5	50.0	63.0	6	6	C	2089-	3089-
50	10.0	0.33	2.5	50.0	63.0	6	6	C	2090-	3090-
50	12.0	0.30	3.0	60.0	75.0	6	6	C	2091-	3091-
50	15.0	0.27	4.0	80.0	100.0	6	6	C	2092-	3092-
50	18.0	0.25	4.5	90.0	113.0	6	6	C	2093-	3093-
50	22.0	0.20	5.5	110.0	138.0	6	6	D	2094-	3094-

See footnote at end of table.

TABLE I. Style CSS13 electrical characteristics and dash numbers – Continued.

DC Rated voltage	Cap (nom) ±10%	ESR +25°C Max(100 kHz)	DC Leakage at			Dissipation factor		Case size	PIN M39003/10- Failure rate level for (%/1,000 hours)1/	
			+25° C Max	+85°C Max	+125°C Max	-55°C +25°C Max	+85°C +125°C Max		B (0.1)	C (0.01)
volts	uF	ohms	uA	uA	uA	percent	percent			
75	.15	4.4	.3	5.0	6.3	2	4	A	2097-	3097-
75	.18	4.0	.3	5.0	6.3	2	4	A	2098-	3098-
75	.22	3.5	.3	5.0	6.3	2	4	A	2099-	3099-
75	.27	3.1	.3	5.0	6.3	2	4	A	2100-	3100-
75	.33	2.8	.3	5.0	6.3	2	4	A	2101-	3101-
75	.39	2.6	.3	5.0	6.3	2	4	A	2102-	3102-
75	.47	2.4	.3	5.0	6.3	2	4	A	2103-	3103-
75	.56	2.25	.3	5.0	6.3	2	4	A	2104-	3104-
75	.68	2.10	.3	5.0	6.3	2	4	A	2105-	3105-
75	.82	1.47	.3	5.0	6.3	2	4	B	2106-	3106-
75	1.0	1.40	.4	5.0	6.3	2	4	B	2107-	3107-
75	1.2	1.33	.4	5.0	6.3	4	4	B	2108-	3108-
75	1.5	1.06	.6	10.0	13.0	4	4	B	2109-	3109-
75	1.8	0.92	.7	10.0	13.0	4	4	B	2110-	3110-
75	2.2	0.80	.8	15.0	19.0	4	4	B	2111-	3111-
75	2.7	0.68	1.0	15.0	19.0	4	4	B	2112-	3112-
75	3.3	0.62	1.2	20.0	25.0	4	4	B	2113-	3113-
75	3.9	0.56	1.5	20.0	25.0	4	4	B	2114-	3114-
75	4.7	0.47	3.0	60.0	75.0	4	4	C	2115-	3115-
75	5.6	0.44	3.0	60.0	75.0	4	4	C	2116-	3116-
75	6.8	0.44	5.0	100.0	125.0	6	6	C	2117-	3117-
75	8.2	0.36	5.0	100.0	125.0	6	6	C	2118-	3118-
75	10.0	0.33	5.0	100.0	125.0	6	6	C	2119-	3119-
75	12.0	0.26	5.0	100.0	125.0	6	6	D	2120-	3120-
75	15.0	0.23	7.0	140.0	175.0	6	6	D	2121-	3121-

1/ Complete dash number shall include additional symbol S or U to indicate S for sleeved, U for unsleeved units.

TABLE II. Style CSS33 electrical characteristics and part numbers.

DC Rated voltage	Cap.	Capaci-tance tolerance	ESR +25°C (100 kHz)	DC Leakage at			Dissipation factor		Case size	PIN M39003/10- Failure rate level for (%/1,000 hours)1/	
				+25°C Max	+85°C Max	+125°C Max	-55°C +25°C Max	+85°C +125°C Max		B (0.1)	C (0.01)
volts	uF	percent	ohms	uA	uA	uA	percent	percent			
6	10.0	10	.70	0.5	2.0	2.0	6	6	A	2500-	3500-
6	12.0	10	.60	0.5	2.0	2.0	6	6	A	2501-	3501-
6	100.0	10	.20	1.0	3.0	3.0	8	8	B	2502-	3502-
6	330.0	10	.065	2.0	8.0	8.0	8	8	C	2503-	3503-
6	390.0	10	.065	2.0	8.0	8.0	10	10	C	2504-	3504-
6	470.0	10	.060	2.0	8.0	8.0	10	10	C	2505-	3505-
6	680.0	10	.060	5.0	10.0	10.0	10	10	D	2506-	3506-
6	820.0	10	.055	5.0	10.0	10.0	10	10	D	2507-	3507-
6	1000.0	10	.050	5.0	10.0	10.0	10	10	D	2508-	3508-
10	6.8	10	.80	.5	2.0	2.0	6	6	A	2509-	3509-
10	8.2	10	.70	.5	2.0	2.0	6	6	A	2510-	3510-
10	47.0	10	.22	1.0	2.0	2.0	6	6	B	2511-	3511-
10	56.0	10	.20	1.0	4.0	4.0	6	6	B	2512-	3512-
10	68.0	10	.18	1.0	4.0	4.0	6	6	B	2513-	3513-
10	82.0	10	.15	1.0	4.0	4.0	6	6	B	2514-	3514-
10	220.0	10	.090	1.0	7.0	7.0	8	8	C	2515-	3515-
10	270.0	10	.075	2.0	10.0	10.0	8	8	C	2516-	3516-
10	390.0	10	.070	2.0	16.0	16.0	10	10	D	2517-	3517-
10	470.0	10	.065	4.0	16.0	16.0	10	10	D	2518-	3518-
10	560.0	10	.060	4.0	16.0	16.0	10	10	D	2519-	3519-
15	4.7	10	.90	.5	2.0	2.0	4	4	A	2520-	3520-
15	5.6	10	.80	.5	2.0	2.0	4	4	A	2521-	3521-
15	33.0	10	.24	1.0	2.0	2.0	6	6	B	2522-	3522-
15	39.0	10	.22	1.0	2.0	2.0	6	6	B	2523-	3523-
15	150.0	10	.10	1.0	7.0	7.0	8	8	C	2524-	3524-
15	180.0	10	.090	2.0	10.0	10.0	8	8	C	2525-	3525-
15	220.0	10	.070	2.0	10.0	10.0	8	8	D	2526-	3526-
15	270.0	10	.065	2.0	16.0	16.0	8	8	D	2527-	3527-
15	330.0	10	.060	2.0	16.0	16.0	8	8	D	2528-	3528-

See footnote at end of table.

TABLE II. Style CSS33 electrical characteristics and part numbers – Continued.

DC Rated voltage	Cap.	Capacitance tolerance	ESR +25°C (100 kHz)	DC Leakage at			Dissipation factor		Case size	PIN M39003/10- Failure rate level for (%/1,000 hours)1/	
				+25°C Max	+85°C Max	+125°C Max	-55°C +25°C Max	+85°C +125°C Max		B (0.1)	C (0.01)
volts	uF	percent	ohms	uA	uA	uA	percent	percent			
20	2.7	10	1.15	.5	2.0	2.0	4	4	A	2529-	3529-
20	3.3	10	.95	.5	2.0	2.0	4	4	A	2530-	3530-
20	3.9	10	.90	.5	2.0	2.0	4	4	A	2531-	3531-
20	18.0	10	.27	1.0	2.0	2.0	6	6	B	2532-	3532-
20	22.0	10	.26	1.0	2.0	2.0	6	6	B	2533-	3533-
20	27.0	10	.24	1.0	2.0	2.0	6	6	B	2534-	3534-
20	56.0	10	.15	1.0	10.0	10.0	6	6	C	2535-	3535-
20	68.0	10	.14	1.0	10.0	10.0	6	6	C	2536-	3536-
20	82.0	10	.12	1.0	10.0	10.0	6	6	C	2537-	3537-
20	100.0	10	.10	1.0	10.0	10.0	6	6	C	2538-	3538-
20	120.0	10	.09	1.0	10.0	10.0	6	6	C	2539-	3539-
20	150.0	10	.08	2.0	10.0	10.0	8	8	D	2540-	3540-
20	180.0	10	.07	2.0	10.0	10.0	8	8	D	2541-	3541-
35	1.8	10	1.20	.5	2.0	2.0	4	4	A	2542-	3542-
35	8.2	10	.40	1.0	2.0	2.0	6	6	B	2543-	3543-
35	10.0	10	.35	1.0	2.0	2.0	6	6	B	2544-	3544-
35	33.0	10	.19	1.0	5.0	5.0	6	6	C	2545-	3545-
35	39.0	10	.17	1.0	5.0	5.0	6	6	C	2546-	3546-
35	47.0	10	.15	1.0	5.0	5.0	6	6	C	2547-	3547-
35	56.0	10	.13	2.0	10.0	10.0	6	6	D	2548-	3548-
35	68.0	10	.12	2.0	10.0	10.0	6	6	D	2549-	3549-
50	1.2	10	1.30	.5	2.0	2.0	4	4	A	2550-	3550-
50	1.5	10	1.20	.5	2.0	2.0	4	4	A	2551-	3551-
50	5.6	10	.47	1.0	2.0	2.0	4	4	B	2552-	3552-
50	6.8	10	.43	1.0	2.0	2.0	6	6	B	2553-	3553-
50	22.0	10	.22	1.0	5.0	5.0	6	6	C	2554-	3554-
50	27.0	10	.20	1.0	5.0	5.0	6	6	C	2555-	3555-
50	33.0	10	.18	1.0	9.0	9.0	6	6	D	2556-	3556-
50	39.0	10	.16	1.0	9.0	9.0	6	6	D	2557-	3557-

1/ Complete dash number shall include additional symbol S or U to indicate S for sleeved, U for unsleeved units.

Qualification Conformance Inspection.

A manufacturer shall be considered qualified for CSS style capacitors if they qualify to the B or C, as applicable, or better failure level of MIL-PRF-39003 for the equivalent CSR style capacitors.

Inspection lot. An inspection lot shall consist of all the capacitors of a single nominal capacitance/voltage rating of one design. It shall be processed as a single lot through manufacturing steps on the same equipment, to the same revisions of the manufacturer's documentation, and identified with the same date and lot code designation. In addition, the lot shall conform to the following:

a. Tantalum powder, and tantalum wire shall be traceable to the same raw material lot batch and be from the same supplier.

b. Production lot numbers shall provide traceability to the anode pressing batch.

c. The anode pressing batch shall be pressed within a 24 hour period on the same pressing machine. Further, it shall be sintered as a complete batch.

d. The entire inspection/production lot shall be voltage formed (same time and tank), impregnated, and otherwise processed through final sealing as a complete batch, with all parts receiving the same processing.

e. Traceability to the operator and the date each operation was performed shall be maintained.

f. Lot identity shall be maintained from the time the lot is assembled.

g. Lot date code shall be assigned at formation of dielectric (Ta_2O_5).

h. Traceability and documentation shall be maintained for a minimum of ten years.

Rework: Rework is not allowed on any operation except for marking, sleeving, and lead rework.

Inspection of product for delivery. Inspection of product for delivery shall consist of Group A inspection.

Group A inspection. Group A inspection shall consist of inspection specified in table III in the order listed; Exception: X-ray may be performed at any point in the sequence. Failure to meet the applicable percent defective allowable (PDA) per table III, shall be cause for lot rejection. Summary of Group A data shall be forwarded to purchaser with parts.

Surge current: Capacitors shall be tested as specified herein. The following details shall apply:

a. Temperature: 10 cycles minimum at -55°C (-5°C/+0°C) and 10 cycles minimum at +85°C (+5°C/-0°C).

b. Voltage: Apply rated voltage ±2 percent for 4 ± 1 seconds. Maximum voltage (including transients) shall not exceed 130% of +85°C rated voltage. Minimum voltage shall not be less than +85°C rated voltage. Discharge the capacitors for 4 ± 1 seconds to a voltage below 1 percent of rated voltage.

c. Series resistance: The total dc resistance (excluding the capacitor) including the wiring, fuse, fixturing and output impedance of the regulated power supply to each test position during the charging cycle shall be 1.0 ohm maximum.

d. Energy storage bank. The energy storage bank shall consist of a single or multiple electrolytic capacitor, of the ultra low impedance type. The capacitor/capacitors shall have a minimum capacitance value of 20,000 μF, and have a working voltage equal to or higher than the rated dc voltage of the capacitors under test.

e. Power supply. The power supply shall be capable of supplying the specified rated dc voltage for the capacitors under test, at a minimum current level of 15 amps.

f. Each capacitor under test shall have a 1 to 5 ampere fuse connected in series. Total resistance between the energy source and each capacitor under test (including the fuse) shall be 1.0 ohm maximum (see application note of MIL-PRF-39003/10). Test equipment (including ohm resistance) shall be designed and adjusted so that instantaneous current available to each capacitor under test shall be 10 amperes minimum, ringing (overshoot) of the applied surge voltage (as measured at the terminals of the capacitor(s) under test) shall not exceed 1.30 times (50 V and less and 1.20 for 75 V) the 85°C working voltage of the capacitor. Peak current to any group of capacitors under test shall be achieved in less than 100 microseconds.

g. Surge current test set up (typical or equivalent). See figure 2.

h. Capacitors shall be placed in the chamber at the specified temperature, in such a position with respect to the air stream that there is substantially no obstruction to the flow of air across and around the capacitors. They shall be soaked for a minimum of 1/2 hour or until all capacitors have stabilized to the chamber temperature. The first temperature to be tested shall be -55°C.
The test sequence shall consist of 10 cycles at -55°C and 10 cycles at +85°C. A cycle shall be of closing the switch and allowing the capacitors under test to charge and discharge through 1.0 ohm maximum.

i. Failure criteria. Any blown fuse or out of spec (DCL at +25°C) conditions or visible indications of damage shall reject the capacitor.

k. System check. System shall be checked at the beginning of each 8 hour shift. The necessary minimum level of resistance (R) and inductance (L) are achieved when the peak surge current level of a single CSS13 style capacitor (330 μF at 6 WV dc) is at least 18 amperes when tested at 6 WV dc. A dc resistance measurement shall be used for calibration purposes.

TABLE III. Group A inspection. 4/

*

Examination or test	Footnotes	Sample size	PDA (Max) 6/
Subgroup 1			
X-Ray (2 views 90° apart)	1/ 7/	100%	N.A.
Thermal shock (10 cycles)	1/ 5/	100%	N.A.
Surge current 10 cycles at -55°C 10 cycles at +85°C	5/	100%	N.A.
DC leakage at +25°C	1/	100%	N.A.
Capacitance (120 Hz)	1/	100%	5%
D.F. (120 Hz)	1/	100%	N.A.
Seal	1/	100%	N.A.
Weibull FR level grading	5/	100%	N.A.
DC leakage at +25°C	1/	100%	N.A.
Capacitance (120 Hz)	1/	100%	5%
ESR (100 kHz)	1/ 2/	100%	2/
Subgroup 2 3/ Visual and mechanical inspection		13 pcs	Lot to be 100% Inspected if 1 or more failures.
Subgroup 3 Stability at low and high temperature		20 pcs	Lot to be 100% inspected if 1 or more failures.

1/ Requirements and/or methods in accordance with MIL-PRF-39003 unless otherwise specified.

2/ Parts with ESR greater than specification limits shall be rejected. Parts with ESR greater than 150 percent of specified limits shall be used for computation of percent defectives.

3/ Any failure shall require 100 percent visual and mechanical examination of the lot.

4/ All capacitors delivered to this specification shall meet nominal values specified in table I or table II.

5/ To the requirements herein.

6/ Overall PDA shall not exceed 10%.

7/ MIL-PRF-39003 X-ray pictorials shall be used with the following details and exceptions:

a. Tubelet solder fill that does not meet MIL-PRF-39003 basic requirement. Voids in the tubelet solder or separation from lead or tubelet that will reduce solder fill to less than what is required in MIL-PRF-39003 basic document.

b. The top of the solder fill may extend above the tubelet but cannot be greater that .015 (0.38mm) below the top of the tubelet. Solder shall not extend below the tubelet inside of the capacitor. (see MIL-PRF-39003 Figure 4).

c. Anodes may be cocked within the case, provided the pellet is not greater than 15 degrees from being parallel with the wall of the case.

d. Bent tantalum riser wire is rejectable.

FIGURE 2. Typical circuit.

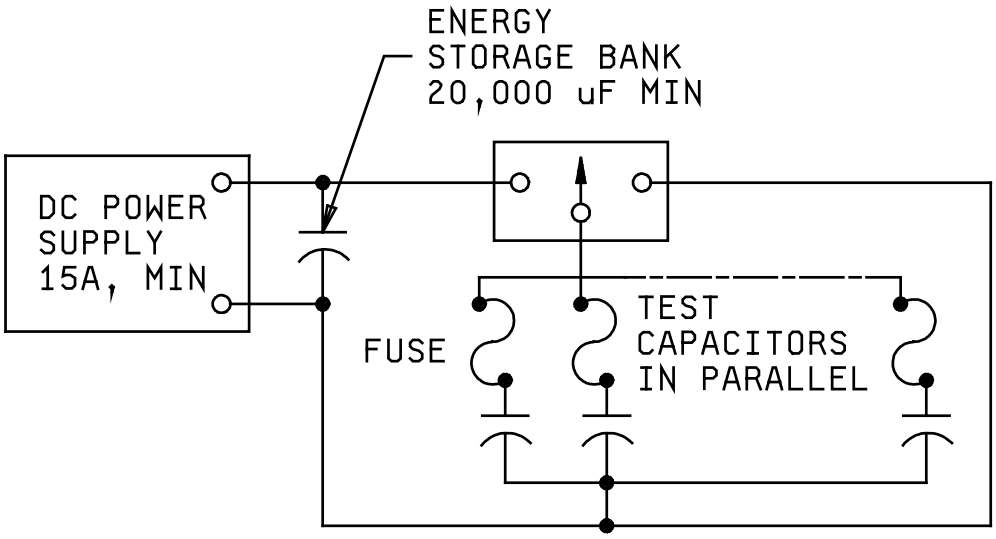

Surge current: After testing, capacitors shall meet the following:

DCL: See table I and table II.

Cap.: Shall be within the tolerance specified.

DF: See table I and table II.

Marking: In accordance with MIL-PRF-39003

Part or Identifying Number (PIN): M39003/10- (dash number from table I or table II).

Weibull FR level grading: Capacitors shall be subjected to an accelerated voltage test in accordance with the requirements of MIL-PRF-39003 except the time shall be 168 hours minimum. After testing there shall be no visible damage and the part shall meet the requirements herein.

Weibull FR level grading:

DCL: See table I and table II.

Cap.: Shall be within the tolerance specified.

DF: See table I and table II.

ESR: See table I and table II.

APPLICATION NOTE: A SOURCE IMPEDANCE OF AT LEAST ONE OHM SHOULD BE USED IN ALL CIRCUITRY CONTAINING THESE PARTS TO ACT AS A TRANSIENT SUPPRESSOR.

* Amendment notations: The margins of this specification are marked with asterisks to indicate modifications generated by this amendment. This was done as a convenience only and the Government assumes no liability whatsoever for any inaccuracies in these notations. Bidders and contractors are cautioned to evaluate the requirements of this document based on the entire content irrespective of the marginal notations.

Custodians:
Army – CR
Navy – EC
Air Force – 19
DLA – CC
NASA - NA

Review activities:
Navy – AS, MC, OS, SH
Air Force – 99

Preparing activity:
DLA - CC

(Project 5910-2010-023)

NOTE: The activities listed above were interested in this document as of the date of this document. Since organizations and responsibilities can change, you should verify the currency of the information above using the ASSIST Online database at https://assist.daps.dla.mil.