INCH-POUND
MIL-PRF-39003N
2 February 2016
SUPERSEDING
MIL-PRF-39003M
w/AMENDMENT 3
15 March 2011

PERFORMANCE SPECIFICATION

CAPACITOR, FIXED, ELECTROLYTIC (SOLID ELECTROLYTE), TANTALUM, ESTABLISHED RELIABILITY, GENERAL SPECIFICATION FOR

FAILURE RATE LEVELS "M", "P", AND "R" ARE INACTIVE FOR NEW DESIGN AFTER 2 FEBRUARY 1984.

FAILURE RATE LEVEL "S" IS INACTIVE FOR NEW DESIGN AFTER 15 AUGUST 1984.

This specification is approved for use by all Departments and Agencies of the Department of Defense.

1. SCOPE.

1.1 Scope. This specification covers the general requirements for established reliability, insulated tantalum, electrolytic (solid electrolyte), fixed capacitors, hermetically sealed 1/ in metal cases (see 6.1). Rated voltages range from 6 to 100 volts dc with surge voltages of 8 to 130 volts dc, respectively (see 4.7.19). These capacitors are designed for full rated voltage operation between -55° and +85°C, derated linearly between +85°C and +125°C to the value shown in table I. A part per million (PPM) quality system is used for documenting and reporting the average outgoing quality of capacitors supplied to this specification. Statistical Process Control (SPC) techniques are required in the manufacturing process to minimize variation in production of capacitors supplied to the requirements of this specification. These capacitors have reliability ratings established on the basis of life tests performed at specified voltage at +85°C for Failure Rate Levels (FRLs) ranging from:

a. 1.0 percent per 1,000 hours to 0.001 percent per 1,000 hours in accordance with MIL-STD-690. These FRLs are established at a 60-percent confidence level and are maintained at a 10-percent producer's risk (Exponential distribution).

b. 1.0 percent per 1,000 hours to 0.001 percent per 1,000 hours at a 90-percent confidence level (Weibull distribution).

1/ For the purpose of this specification, a hermetically-sealed capacitor is one in which the capacitance element is contained within a sealed enclosure of ceramic, glass, or metal, or combination thereof, where sealing is accomplished by material fusion, welding, brazing, or soldering.

Comments, suggestions, or questions on this document should be addressed to DLA Land and Maritime, ATTN: VAT, Post Office Box 3990, Columbus, OH 43218-3990, or emailed to capacitorfilter@dla.mil. Since contact information can change, you may want to verify the currency of this address information using the ASSIST Online database at https://assist.dla.mil/.

AMSC N/A

FSC 5910

TABLE I. Voltage derating.

Rated voltage (at +85°C)	Derated voltage (at +125°C)
Volts, dc	Volts, dc
6	4
10	7
15	10
20	13
35	23
50	33
75	50
100	67

1.2 Classification. Capacitors covered by this specification are classified by the style, as specified (see 3.1).

1.2.1 Part or identifying number (PIN).

1.2.1.1 The PIN for specification sheets /1, /2, /3, /4, /6, and /9 is in the following form and as specified (see 3.1).

M39003	/01	-2065	A
Basic specification	Specification sheet	Dash number (see 3.1)	Surge current testing/ high temp. solder option (see table II and table III)

NOTE: Specification sheet /4 does not have a high temperature solder option (see table II).

1.2.1.2 The PIN for specification sheets /10 and /11 is in the following form and as specified (see 3.1).

M39003	/10	-3500	S
Basic specification	Specification sheet	Dash number (see 3.1)	Sleeving option S=sleeved U=unsleeved

TABLE II. Optional surge current testing/high temperature solder for specification sheets /1, /2, /3, and /4.

Option letter 1/	Temperatures 2/	Surge current testing before Weibull grading/Voltage Aging	Surge current testing after Weibull grading/Voltage Aging	High temperature Solder 3/
A	+25°C	N/A	X	N/A
B	(-55°C and +85°C)	N/A	X	N/A
C	(-55°C and +85°C)	X	N/A	N/A
D 4/	+25°C	N/A	X	X
E 4/	(-55°C and +85°C)	N/A	X	X
F 4/	(-55°C and +85°C)	X	N/A	X
H 4/	High temperature solder only	N/A	N/A	X
Blank	N/A	N/A	N/A	N/A

1/ If the PIN contains no surge current testing/high temperature solder option letter, no surge current test or high temperature solder is required . If an option letter is included in the PIN, the requirement of this table takes precedence.
2/ Temperature tolerances are -5°C, +0°C for -55°C; ±5°C for +25°C; and -0°C, +5°C for +85°C.
3/ High temperature solder indicates an internal construction solder with a minimum melting point of +221°C.
4/ Not applicable to specification sheet /4.

TABLE III. Optional surge current testing/high temperature solder for specification sheets /6 and /9.

Option letter	Temperatures 1/	Surge current testing before Weibull grading/Voltage Aging	Surge current testing after Weibull grading/Voltage Aging	High temperature Solder 2/
Blank	+25°C	N/A	X	N/A
B	(-55°C and +85°C)	N/A	X	N/A
C	(-55°C and +85°C)	X	N/A	N/A
E	(-55°C and +85°C)	N/A	X	X
F	(-55°C and +85°C)	X	N/A	X
H	+25°C	N/A	X	X

1/ Temperature tolerances are -5°C, +0°C for -55°C; ±5°C for +25°C; and -0°C, +5°C for +85°C.
2/ High temperature solder indicates an internal construction solder with a minimum melting point of +221°C.

2. APPLICABLE DOCUMENTS

2.1 General. The documents listed in this section are specified in sections 3 and 4 of this specification. This section does not include documents cited in other sections of this specification or recommended for additional information or as examples. While every effort has been made to ensure the completeness of this list, document users are cautioned that they must meet all specified requirements documents cited in sections 3 and 4 of this specification, whether or not they are listed.

2.2 Government documents.

2.2.1 Specifications, standards, and handbooks. The following specifications, standards, and handbooks form a part of this document to the extent specified herein. Unless otherwise specified, the issues of these documents are those cited in the solicitation or contract (see 6.2).

DEPARTMENT OF DEFENSE SPECIFICATIONS

MIL-PRF-55365	-	Capacitor, Fixed, Electrolytic (Tantalum), Chip, Nonestablished Reliability, Established Reliability, General Specification for

(See supplement 1 for list of associated specification sheets.)

DEPARTMENT OF DEFENSE STANDARDS

MIL-STD-202	-	Electronic and Electrical Component Parts, Test Methods for
MIL-STD-202-101	-	Method 101, Salt Atmosphere (Corrosion)
MIL-STD-202-104	-	Method 104, Immersion
MIL-STD-202-106	-	Method 106, Moisture Resistance
MIL-STD-202-107	-	Method 107, Thermal Shock
MIL-STD-202-108	-	Method 108, Life (at Elevated Ambient Temperature)
MIL-STD-202-112	-	Method 112, Seal
MIL-STD-202-204	-	Method 204, Vibration, High Frequency
MIL-STD-202-208	-	Method 208, Solderability
MIL-STD-202-209	-	Method 209, Radiographic Inspection
MIL-STD-202-210	-	Method 210, Resistance to Soldering Heat
MIL-STD-202-211	-	Method 211, Terminal Strength
MIL-STD-202-213	-	Method 213, Shock (Specified Pulse)
MIL-STD-202-215	-	Method 215, Resistance to Solvents
MIL-STD-202-305	-	Method 305, Capacitance
MIL-STD-690	-	Failure Rate Sampling Plans and Procedures
MIL-STD-790	-	Standard Practice for Established Reliability and High Reliability Qualified Products List (QPL) Systems for Electrical, Electronic, and Fiber Optic Parts Specifications
MIL-STD-810	-	Environmental Test Methods and Engineering Guidelines
MIL-STD-1276	-	Leads for Electronic Component Parts
MIL-STD-1285	-	Marking of Electrical and Electronic Parts

(Copies of these documents are available online at http://quicksearch.dla.mil/)

2.3 Non-Government publications. The following documents form a part of this document to the extent specified herein. Unless otherwise specified, the issues of these documents are those cited in the solicitation or contract.

ASSOCIATION CONNECTING ELECTRONICS INDUSTRIES (IPC)

IPC J-STD-004	-	Requirements for Soldering Fluxes
IPC J-STD-005	-	Requirements for Soldering Paste
IPC J-STD-006	-	Requirements for Electronic Grade Solder Alloys and Fluxed and Non-fluxed Solid Solders for Electronic Soldering Applications

(Copies of these documents are available online at http://www.ipc.org/).

SAE INTERNATIONAL (SAE)

SAE AMS-DTL-23053	-	Insulation Sleeving, Electrical, Heat Shrinkable, General Specification for
SAE EIA-554-1	-	Assessment of Average Outgoing Quality Levels in Parts Per Million (PPM)

(Copies of these documents are available online at http://www.sae.org/)

SOLID STATE TECHNOLOGY ASSOCIATION (JEDEC)

JESD557	-	Statistical Process Control Systems

(Copies of this document are available online at http://www.jedec.org.)

2.4 Order of precedence. Unless otherwise noted herein or in the contract, in the event of a conflict between the text of this document and the references cited herein (except for related associated specifications, specification sheets, or MS sheets), the text of this document takes precedence. Nothing in this document, however, supersedes applicable laws and regulations unless a specific exemption has been obtained.

3. REQUIREMENTS

3.1 Specification sheets. The individual item requirements shall be as specified herein and in accordance with the applicable specification sheet. In the event of any conflict between the requirements of this specification and the specification sheet, the latter shall govern (see 6.2).

3.2 Qualification. Capacitors furnished under this specification shall be products which are authorized by the qualifying activity for listing on the applicable qualified products list (QPL) before contract award (see 4.5 and 6.3).

3.3 QPL system. The manufacturer shall establish and maintain a QPL system for parts covered by this specification. Requirements for this system are specified in MIL-STD-690 and MIL-STD-790. In addition, the manufacturer shall also establish an SPC and PPM system that meets the requirements as detailed in 3.3.1 and 3.3.2, respectively. Reliability of capacitors furnished under this specification shall be established and maintained in accordance with the procedures and requirements specified in MIL-STD-690 and MIL-STD-790 with details specified in 4.4.4.1 and 4.5. The reliability rating is identified by the following FRL symbols:

Symbol	Exponential FRL (%/1,000 hrs)	Symbol	Weibull FRL (%/1,000 hrs)
M	1.0	G	1.0
P	0.1	B	0.1
R	0.01	C	0.01
S	0.001	D	0.001

3.3.1 SPC. The manufacturer shall implement and use statistical process control techniques in the manufacturing process for parts covered by this specification. The SPC program shall be developed and maintained in accordance with JESD557. The SPC program shall be documented and maintained as part of the overall product assurance program as specified in MIL-STD-790. Processes for application of SPC techniques should include but are not limited to the following:

a. Pressing.

b. Sintering.

c. Electro-chemical processing.

d. Assembly/encapsulation.

e. Packaging.

3.3.2 PPM system. As part of the overall MIL-STD-790 QPL system, the manufacturer shall establish a PPM system of assessing the average outgoing quality of lots in accordance with SAE EIA-554-1. Data exclusion, in accordance with SAE EIA-554-1, may be used with approval of the qualifying activity. The ppm system shall identify the ppm rate at the end of each month and shall be based on 6-month moving average. Style reporting shall include ER style combinations.

3.4 Materials. Materials shall be as specified herein. However, when a definite material is not specified, a material shall be used which will enable the capacitors to meet the performance requirements of this specification. Acceptance or approval of any constituent material shall not be construed as a guarantee of the acceptance of the finished product.

3.4.1 Case. The case shall be of a corrosion-resisting material or shall be plated or treated to resist corrosion.

3.4.2 Sleeving. The sleeving shall be of a nonfungus nutrient material. In addition, the material used shall not soften, creep, or shrink to a point where any part of the cylindrical portion of the case is left uncovered at any test temperature specified herein. The sleeving shall not obscure the part marking. See SAE AMS-DTL-23053 for guidance on sleeving materials.

3.4.3 Solder and soldering flux. Solder and soldering flux shall be of such quality as to enable the capacitors to meet all of the requirements of this specification.

3.4.4 Pure tin. The use of pure tin, as an underplate or final finish, is prohibited both internally and externally. Tin content of capacitor components and solder shall not exceed 97 percent by mass. Tin shall be alloyed with a minimum of 3 percent lead, by mass (see 6.8). Lead-free, tin alloy high temperature solders may be used where high temperature solder is necessary with approval of the qualifying activity. The tin content of lead-free high temperature solders shall not exceed 97 percent by mass.

3.5 Interface and physical dimension requirements. Capacitors shall meet the interface and physical dimensions specified (see 3.1). Nonpolarized capacitors shall be constructed from two style CSR13 polarized units which have passed group A inspection.

3.5.1 Case. Each capacitor shall be enclosed in a hermetically sealed metal case which will protect the capacitor element from moisture and mechanical damage under all test conditions specified herein. Nonpolarized capacitors, consisting of two hermetically sealed capacitors joined together, need not be hermetically sealed within the joining sleeve.

3.5.2 Terminals.

3.5.2.1 Solder dip (retinning). Only the manufacturer (or his authorized category B distributor) may solder dip/retin the leads of the capacitors supplied to this specification, provided the solder dip process (see appendix C) has been approved by the qualifying activity.

3.6 Thermal shock. When tested as specified in 4.7.2, capacitors shall withstand the extremes of high and low temperatures without visible damage.

3.7 Voltage aging (exponential only). When tested as specified in 4.7.3, capacitors shall meet the following requirements:

a. DC leakage: Shall not exceed the requirement specified in 3.11.

b. Capacitance: Shall be within the tolerance specified (see 3.1).

c. Dissipation factor: Shall not exceed the requirement specified in 3.13.

d. Equivalent series resistance (ESR) (styles CSR21 and CSS21 only): Shall not exceed the requirement specified in 3.14.

3.8 Weibull FRL grading (in lieu of 3.7). When tested as specified in 4.7.25, capacitors shall exhibit decreasing failure rate with respect to time as evidenced by a value of beta (β) which is less than 0.9; and the instantaneous failure rate in the last interval shall be no more than the failure rate specified. After grading, capacitors shall meet the following requirements:

a. DC leakage: Shall not exceed the requirement specified in 3.11.

b. Capacitance: Shall be within the tolerance specified (see 3.1).

c. Dissipation factor: Shall not exceed the requirement specified in 3.13.

d. ESR (styles CSR21 and CSS21 only): Shall not exceed the requirement specified (see 3.1).

3.9 Seal (polarized capacitors only, see 3.1). When capacitors are tested as specified in 4.7.4, there shall be no evidence of leakage.

3.10 Radiographic inspection (polarized capacitors only, see 3.1) (not applicable to exponential distribution FRL "M"). When capacitors are tested as specified in 4.7.5, radiographic inspection shall disclose no evidence of improperly made connections, misalignment of slugs and seals or eyelets, substandard soldering or structural weakness, or solder particles or solder balls that exceed .010 (0.25 mm) in their largest dimension (see 4.7.5d).

3.11 DC leakage. When measured as specified in 4.7.6, the dc leakage shall not exceed the applicable value specified (see 3.1).

3.12 Capacitance. When measured as specified in 4.7.7, the capacitance shall be within tolerance of the nominal value specified (see 3.1).

3.13 Dissipation factor. When measured as specified in 4.7.8, the dissipation factor shall not exceed the value specified (see 3.1).

3.14 Equivalent series resistance (ESR) (styles CSR21 and CSS21 only). When measured as specified in 4.7.9, the ESR shall not exceed the value specified (see 3.1).

3.15 Shock (specified pulse) (see 3.1). When capacitors are tested as specified in 4.7.10, there shall be no intermittent contacts of 0.5 ms or greater duration, or arcing or other indication of breakdown, nor shall there be any open or short-circuiting or evidence of mechanical damage.

3.16 Vibration, high frequency (polarized capacitors only, see 3.1). When capacitors are tested as specified in 4.7.11, there shall be no intermittent contacts of 0.5 ms or greater duration, open-circuiting or short-circuiting, or evidence of breakdown, arcing, and mechanical damage.

3.17 Salt atmosphere (corrosion). When capacitors are tested as specified in 4.7.12, there shall be no harmful corrosion, and at least 90 percent of any exposed metal surface of the capacitor shall be protected by the finish. There shall be no unwrapping of, or mechanical damage to the sleeving. Marking shall remain legible.

NOTE: Harmful corrosion shall be construed as being any type of corrosion that in any way interferes with the mechanical or electrical performance of the capacitor.

3.18 Thermal shock and immersion (polarized capacitors only, see 3.1). When tested as specified in 4.7.13, capacitors shall meet the following requirements:

a. DC leakage: Shall not exceed the requirement specified in 3.11.

b. Capacitance: Shall change not more than ± 3 percent from the value obtained when measured as specified in 4.7.7.

c. Dissipation factor: Shall not exceed the requirement specified in 3.13.

d. ESR (styles CSR21 and CSS21 only): Shall not exceed the requirement specified in 3.14.

e. Visual examination: There shall be no evidence of harmful corrosion (as defined in 3.16), mechanical damage, or obliteration of marking.

3.19 Solderability (polarized capacitors only, see 3.1). When capacitors are tested as specified in 4.7.14, the dipped portion of the leads shall conform to the solid-wire termination criteria of method 208 of MIL-STD-202.

3.20 Terminal strength (polarized capacitors only, see 3.1). When capacitors are tested as specified in 4.7.15, there shall be no loosening of the terminals or permanent damage to the terminals, terminal weld, or terminal solder, as applicable.

3.21 Moisture resistance (polarized capacitors only, see 3.1). When tested as specified in 4.7.16, capacitors shall meet the following requirements:

a. DC leakage: Shall not exceed the requirement specified in 3.11.

b. Capacitance: Shall change not more than ± 2 percent from the value obtained when measured as specified in 4.7.7.

c. Dissipation factor: Shall not exceed the requirement specified in 3.13.

d. ESR (styles CSR21and CSS21 only): Shall not exceed the requirement specified in 3.14.

e. Visual examination: There shall be no evidence of harmful corrosion (as defined in 3.16), mechanical damage, or obliteration of marking.

3.22 Sleeving (polarized capacitors only, see 3.1). When capacitors are tested as specified in 4.7.17, the sleeving shall withstand the specified potential without breakdown; the insulation resistance shall be 1,000 megohms, minimum.

3.23 Stability at low and high temperatures (polarized capacitors only, see 3.1). When tested as specified in 4.7.18, capacitors shall meet the following requirements:

a. Step 1 (+25°C):

(1) DC leakage: Shall not exceed the requirement specified in 3.11.

(2) Capacitance: Shall be within tolerance of the nominal value specified (see 3.1).

(3) Dissipation factor: Shall not exceed the requirement specified in 3.13.

b. Step 2 (-55°C):

(1) Capacitance: Shall change not more than the applicable value specified (see 3.1) from the step 1 measured value.

(2) Dissipation factor: Shall not exceed the applicable value specified (see 3.1).

c. Step 3 (+25°C):

(1) DC leakage: Shall not exceed the applicable value specified (see 3.1).

(2) Capacitance: Shall change not more than ± 2 percent from the step 1 measured value.

(3) Dissipation factor: Shall not exceed the applicable value specified (see 3.1).

d. Step 4 (+85°C):

(1) DC leakage: Shall not exceed the applicable value specified (see 3.1).

(2) Capacitance: Shall change not more than the applicable value specified (see 3.1) from the step 1 measured value.

(3) Dissipation factor: Shall not exceed the applicable value specified (see 3.1).

e. Step 5 (+125°C):

(1) DC leakage: Shall not exceed the applicable value specified (see 3.1).

(2) Capacitance: Shall change not more than ± 12 percent from the step 1 measured value.

(3) Dissipation factor: Shall not exceed the applicable value specified (see 3.1).

f. Step 6 (+25°C):

(1) DC leakage: Shall not exceed the applicable value specified (see 3.1).

(2) Capacitance: Shall change not more than ± 2 percent from the step 1 measured value.

(3) Dissipation factor: Shall not exceed the applicable value specified (see 3.1).

3.24 Surge voltage (polarized capacitors only, exponential only, see 3.1). When tested as specified in 4.7.19, capacitors shall meet the following requirements:

a. DC leakage: Shall not exceed the requirement specified in 3.11.

b. Capacitance: Shall change not more than ± 2 percent from the value obtained when measured as specified in 4.7.7.

c. Dissipation factor: Shall not exceed the requirement specified in 3.13.

3.25 Life (polarized, capacitors only, see 3.1). When capacitors are tested as specified in 4.7.20, there shall be no mechanical damage, intermittent shorts, or permanent shorts or opens.

3.25.1 Qualification inspection. When tested as specified in 4.7.20.1, capacitors shall meet the following requirements:

a. At +25°C:

(1) DC leakage: Shall not exceed the requirement specified (see 3.1).

(2) Capacitance: Shall change not more than the applicable value specified (see 3.1), from the value obtained when measured as specified in 4.7.7.

(3) Dissipation factor: Shall not exceed the applicable value specified (see 3.1).

b. At +85°C: DC leakage: Shall not exceed the applicable value specified (see 3.1).

c. At +125°C: DC leakage: Shall not exceed the applicable value specified (see 3.1).

3.25.2 Conformance inspection.

3.25.2.1 Group A inspection. When tested as specified in 4.7.3 or 4.7.25, exponential or Weibull as applicable, capacitors shall meet the requirements specified in 3.7 or 3.8. Weibull failure rate level requirements of 4.7.25 and 3.8 shall be accepted in lieu of group B inspection data.

3.25.2.2 Group B inspection (exponential only). When tested as specified in 4.7.20.2.1, capacitors shall meet the requirements specified in 3.25.1.

3.25.2.3 Group C life or extended life (see 4.6.1.3.2). When tested as specified in 4.7.20.2.2, capacitors shall meet the following requirements:

a. At +25°C:

(1) DC leakage: Shall not exceed the applicable value specified (see 3.1).

(2) Capacitance: Shall change not more than ± 10 percent from the value obtained when measured as specified in 4.7.7.

(3) Dissipation factor: Shall not exceed the applicable value specified (see 3.1).

b. At +85°C: DC leakage: Shall not exceed the applicable value specified (see 3.1).

c. At +125°C: DC leakage: Shall not exceed the applicable value specified (see 3.1).

3.26 Fungus (polarized capacitors only, see 3.1). The manufacturer shall certify that all external materials are fungus resistant or shall perform the test specified in 4.7.21. When tested as specified in 4.7.21, examination shall disclose no evidence of fungus growth on the external surface.

3.27 Resistance to solvents. When capacitors are tested as specified in 4.7.22, there shall be no evidence of mechanical damage and the marking shall remain legible.

3.28 Resistance to soldering heat (polarized capacitors only, see 3.1). When tested as specified in 4.7.23, capacitors shall meet the following requirements:

a. DC leakage: Shall not exceed the requirement specified in 3.11.

b. Capacitance: Shall change not more than ± 2 percent from the value obtained when measured as specified in 4.7.7.

c. Dissipation factor: Shall not exceed the requirement specified in 3.13.

d. Visual examination: There shall be no evidence of external damage.

3.29 Ripple current (styles CSR21 and CSS21 only). When capacitors are tested as specified in 4.7.24, there shall be no mechanical damage, intermittent shorts, or permanent shorts or opens, and the capacitors shall meet the following requirements:

a. DC leakage: Shall not exceed the requirement specified in 3.11.

b. Capacitance: Shall change not more than ± 2 percent from the value obtained when measured as specified in 4.7.7.

c. Dissipation factor: Shall not exceed the requirement specified in 3.13.

d. ESR: Shall not exceed the applicable value specified in 3.14.

3.30 Surge current (when specified in the PIN). When tested as specified in 4.7.26, the capacitors shall meet the following requirements:

a. DC leakage: Shall not exceed the applicable value specified in 3.11.

b. Capacitance: Shall be within the tolerance specified (see 3.1).

c. Dissipation factor: Shall not exceed the requirement specified in 3.13.

3.31 Marking.

3.31.1 Capacitor marking. Capacitors shall be marked in accordance with method I of MIL-STD-1285 and shall include the specified information, in the sequence shown, for the applicable case size (see 3.1), as shown in the following examples:

Example (case sizes A, A1, and B1):

39003	-	Military specification number.
02 - TMJ	-	Specification sheet number, trademark and “J” for JAN.
2054C	-	Dash number and surge current option letter (if applicable).
+224 A 1/	-	Polarity, date code (first digit indicates year and the next two digits indicate the week), and lot symbol(s).

Example (case size B):

M39003	-	Military specification number.
01	-	Specification sheet number.
6007CJ	-	Dash number, surge current option letter (if applicable) and "J" for JAN.
12345	-	CAGE code.
+224 A 2/	-	Polarity, date code (first digit indicates year and the next two digits indicate the week), and lot symbol(s).

Example (case sizes C and D):

M39003J	-	Military specification number and “J” for JAN.
01 – 6300C	-	Specification sheet number, dash number, and surge current option letter (if applicable).
+12 μF 3/	-	Positive terminal identifier and capacitance value.
10% 75 V	-	Capacitance tolerance and voltage rating.
12345	-	CAGE code.
0224 AB	-	Date code, lot code.

Example (case sizes W, X, Y, and Z):

M39003J	-	Military specification number and “J” for JAN.
04 – 3168C	-	Specification sheet number, dash number, and surge current option letter (if applicable).
.0023 μF	-	capacitance value.
10% 100 V NP	-	Capacitance tolerance and voltage rating, nonpolarized.
12345	-	CAGE code.
0224 AB	-	Date code, lot code.

1/ Polarity symbol shall be near the positive terminal and may be placed on either end of the fourth line of type depending on the marking orientation with respect to the polarity.
2/ Polarity symbol shall be near the positive terminal and may be placed on either end of the fifth line of type depending on the marking orientation with respect to the polarity.
3/ Polarity symbol shall be near the positive terminal and may be placed on either end of the third line of type depending on the marking orientation with respect to the polarity.

NOTE: There shall be no marking on the capacitor sleeving.

3.31.2 JAN and J marking. The United States Government has adopted and is exercising legitimate control over the certification marks “JAN” and “J”, respectively, to indicate that items so marked or identified are manufactured to, and meet all the requirements of specifications. Accordingly, items acquired to, and meeting all of the criteria specified herein and in applicable specifications shall bear the certification mark “JAN” except that items too small to bear the certification mark “JAN” shall bear the letter “J”. The “JAN” or “J” shall be placed immediately before the part number except that if such location would place a hardship on the manufacturer in connection with such marking, the “JAN” or “J” may be located on the first line above or below the part number. Items furnished under contracts or orders which either permit or require deviation from the conditions or requirements specified herein or in applicable specifications shall not bear “JAN” or "J". In the event an item fails to meet the requirements of this specification and the applicable specification sheets, the manufacturer shall remove completely the military part number and the “JAN” or the “J” from the sample tested and also from all items represented by the sample. The “JAN” or “J” certification mark shall not be used on products acquired to contractor drawings or specifications. The United States Government has obtained Certificate of Registration Number 504,860 for the certification mark “JAN” and Registration Number 2,577,735 for the certification mark “J”.

3.31.3 Substitution of failure rate levels. A manufacturer may substitute, with acquiring agency approval, failure rate levels in accordance with table IV. Qualified manufacturers may mark exponential failure rate dash numbers on parts that have been Weibull graded to levels G, B, C, or D. Items having a Weibull failure rate level (FRL) may be substituted, with acquiring agency approval, for items of an exponential FRL as shown in table IV. Parts qualified and marked to lower FRLs with acquiring agency approval, are substitutable for higher FRLs and shall not be remarked unless specified in the contract or purchase order (see 6.2). In the event the failure rate levels are remarked, the date lot codes on the parts shall not be changed and the workmanship criteria shall be met.

TABLE IV. Failure rate level substitutability.

Parts qualified to failure rate level	Are substitutable for failure rate level
D	M, P, R, S, G, B, and C
C	M, P, R, S, G, and B
B	M, P, R, S, and G
S	M, P, and R
G,R	M, and P
G,P	M

3.31.4 Substitution of capacitance tolerance and rated voltage. Parts qualified and marked to tighter capacitance tolerance or higher rated voltage, with acquiring agency approval, are substitutable for parts marked to looser capacitance tolerance or lower rated voltage, provided all other values, such as case size and terminations are the same. The substitutable parts shall not be remarked unless specified in the contract or purchase order (see 6.2). In the event the capacitance tolerances or rated voltages are remarked, the lot date codes on the parts shall not be changed and the workmanship criteria shall be met.

3.31.5 Substitution of Surge current test levels. Qualified manufacturers may apply standard marking per 3.31 on parts that have been tested to one of the surge current options. Items qualified and marked to a particular surge current test option are substitutable, with acquiring agency approval, for parts not requiring surge current testing and shall not be remarked unless specified in the contract or purchase order.

3.32 Recycled, recovered, environmentally preferable, or biobased materials. Recycled, recovered, environmentally preferable, or biobased materials should be used to the maximum extent possible provided that the material meets or exceeds the operational and maintenance requirements, and promotes economically advantageous life cycle costs.

3.33 Workmanship. Capacitors shall be processed in such a manner as to be uniform in quality and shall be free from pits, corrosion, cracks, rough edges, and other defects, which will affect life, serviceability, or appearance.

4. VERIFICATION

4.1 Classification of inspection. The inspection requirements specified herein are classified as follows:

a. Qualification inspection (see 4.4).

b. Verification of qualification (see 4.5).

c. Conformance inspection (see 4.6).

4.2 QPL system. The manufacturer shall establish and maintain a QPL system as described in 3.3. Evidence of such compliance is a prerequisite for qualification and retention of qualification.

4.3 Inspection conditions and methods.

4.3.1 Conditions. Unless otherwise specified herein, all inspections shall be performed in accordance with the test conditions specified in the "GENERAL REQUIREMENTS" of MIL-STD-202.

4.3.2 Methods.

4.3.2.1 AC measurements. AC measurements shall be made at the frequency specified. The magnitude of the ac voltage shall be equal to or less than 1.0 volt root mean squared (rms). For all ac measurements of polarized capacitors, the maximum dc bias voltage shall be equal to or less than 2.2 volts.

4.3.2.2 Reference measurements. When requirements are based on comparative measurements made before and after conditioning, the reference measurements shall be considered the last measurements made at +25°C ±2°C prior to conditioning. Unless reference measurements have been made within 30 days prior to the beginning of conditioning, they shall be repeated.

4.3.3 Power supply. The power supply used for life testing shall have a regulation of ±2 percent or less of the rated voltage. The power source employed for dc leakage current measurements shall be stabilized to at least ±100 PPM. During measurements there must be no voltage fluctuations of sufficient amplitude to produce a variation in the current measurement as read with any dc leakage current tester used to test capacitors.

4.4 Qualification inspection (polarized capacitors only, see 3.1 and A.4.3). Qualification inspection shall be performed at a laboratory acceptable to the Government (see 6.3) on sample units produced with equipment and procedures normally used in production. Qualification approval will be based on the successful completion of the tests specified in table V, and will not be withheld pending completion of the extended life test of 4.4.4.1.1a.

4.4.1 Sample size. The number of capacitors to be subjected to qualification inspection shall be as specified in table V and appendix A. Each capacitor style shall be qualified separately.

4.4.2 Inspection routine. The sample shall be subjected to the inspections specified in table V in the order shown. All sample units shall be subjected to the inspection of group I. Two sample units shall be subjected to the visual and mechanical examination (internal) and 163 sample units (175 sample units for CSR21) shall be subjected to the remaining inspections of group II. The 163 units successfully completing group II inspection shall then be divided as specified in table V for groups III through VII (175 units for CSR21, successfully completing group II inspections shall then be divided as specified in table V for groups III through VIII), and subjected to the inspections for their particular group; for combined-voltage group submissions, each type shall be equally represented in each group.

4.4.3 Failures. Failures in excess of those allowed in table V shall be cause for refusal to grant qualification approval.

TABLE V. Qualification inspection.

Inspection	Requirement paragraph	Test method paragraph	Number of sample units to be inspected	Number of failures allowed 1/
Group I 2/ Thermal shock Voltage aging (exponential only see 3.1) Surge current (CSR21 and CSR33 only) Seal Radiographic inspection (not applicable to FRL "M")	 3.6 3.7 3.30 3.9 3.10	 4.7.2 4.7.3 4.7.26 4.7.4 4.7.5	All units	Not Applicable
Group II Visual and mechanical inspection (internal)	3.1, 3.4, and 3.5	4.7.1	2	0
Visual and mechanical inspection (external) 2/ 3/ DC leakage 2/ Capacitance 2/ Dissipation factor 2/ ESR 2/ (CSR21 only)	3.1, 3.4, 3.5, 3.31, and 3.33 3.11 3.12 3.13 3.14	4.7.1 4.7.6 4.7.7 4.7.8 4.7.9	4/	1 5/
Group III Shock (specified pulse) Vibration, high frequency Salt atmosphere (corrosion) Thermal shock and immersion	 3.15 3.16 3.17 3.18	 4.7.10 4.7.11 4.7.12 4.7.13	12	
Group IV Solderability Terminal strength Fungus Resistance to solvents Resistance to soldering heat Moisture resistance Sleeving	 3.19 3.20 3.26 3.27 3.28 3.21 3.22	 4.7.14 4.7.15 4.7.21 4.7.22 4.7.23 4.7.16 4.7.17	12	
Group V Stability at low and high temperatures Surge voltage	 3.23 3.24	 4.7.18 4.7.19	12	
Group VI 6/ Life (at +125°C)	 3.25.1	 4.7.20.1	24	
Group VII Life (at +85°C)	 3.25.1	 4.7.20.1	102	1
Group VIII Ripple current (CSR21only)	 3.29	 4.7.24	12	1

See footnotes at end of table.

TABLE V. Qualification inspection - Continued.

1/ A sample unit having one or more defects shall be considered as a single failure.
2/ Nondestructive tests.
3 /Marking defects are based on visual examination only and shall be charged only for illegible, incomplete, or incorrect marking.
4/ The sample size for CSR21 shall be 175 units, and the sample size for all other styles shall be 163. One additional sample unit is included in each sample size to permit substitution for the failure allowed in groups II through VI.
5/ This failure shall not be for the shock (specified pulse) or the vibration, high frequency test.
6/ For qualification of design changes only, qualified manufacturers may submit Weibull data in lieu of groups VI and VII test data.

4.4.4 Failure rate level and quality level verification.

4.4.4.1 Failure rate level qualification.

4.4.4.1.1 Exponential. Exponential FR qualification shall be in accordance with the general and detailed requirements of MIL-STD-690, and the following details:

a. Procedure I: Qualification at the initial FR level. FR level "M" of FRSP-60, Failure Rate Sampling Procedure (FRSP), shall apply. Sample units shall be subjected to the qualification inspection specified in group VII, table V (see 4.4.2). The entire life tests sample shall be continued on test to 10,000 hours as specified in 4.7.20.2.2 on completion of the 2,000-hour qualification test.

b. Procedure II: Extension of qualification to lower FR levels. To extend qualification to FR level "P", data shall be limited to each voltage group within a style; for FR levels "R" and "S", data from two or more voltage groups within a style of similar construction may be combined.

c. Procedure III: Maintenance of FR level qualification. Maintenance period B of FRSP-10 shall apply. Regardless of the number of production lots produced during this period, the specified number of unit hours shall be accumulated to maintain qualification (see 4.5e).

4.4.4.1.2 Weibull. Weibull FR qualification will be granted only to manufacturers who have achieved FR level "P" for any capacitor style covered by this specification in accordance with 4.4.4.1.1. To extend qualification to include Weibull FR level, the manufacturer shall demonstrate the capability of Weibull FR level grading (see 4.7.25) to the qualifying activity.

If during four consecutive reporting periods there has been no production of the lowest Weibull failure rate level for which the manufacturer is qualified, the manufacturer may be required, at the discretion of the qualifying activity, to submit a product of each style to testing in accordance with the qualification inspection requirements. Failure to meet this requirement shall result in a loss of the manufacturer's failure rate to the lowest failure rate last demonstrated.

4.4.4.2 Quality level verification. The contractor is responsible for establishing a quality system to verify the ppm defect level of lots that are subjected to group A inspections. The ppm defect level shall be maintained for each specification sheet. The ppm defect level shall be based on a 6-month moving average.

4.5 Verification of qualification (polarized capacitors only, see 3.1). Every 6 months, the manufacturer shall provide verification of qualification to the qualifying activity. Continued qualification is based on meeting the following requirements:

a. MIL-STD-790 program.

b. The capacitor design has not been modified.

c. Lot rejection for group A inspection does not exceed 5 percent or one lot, whichever is greater.

d. Periodic group C inspection.

e. Verification of FRLs.

f. PPM assessment. Capacitor styles may be combined in accordance with each group listed in 4.6.1.1 for ppm calculations.

In the event that no production occurred during the reporting period, a report shall be submitted certifying that the company still has the capabilities and facilities necessary to produce the item. If during three consecutive reporting periods there has been no production, the manufacturer may be required, at the discretion of the qualifying activity, to submit a representative product of each style to testing in accordance with the qualification inspection requirements.

4.6 Conformance inspection.

4.6.1 Inspection of product for delivery. Inspection of product for delivery shall consist of groups A and C inspections for nonpolarized units and groups A, B (if applicable, see 3.1), and C inspections for polarized units. Shipment need not be held pending the results of group C tests.

4.6.1.1 Lot definitions.

4.6.1.1.1 Exponential distribution inspection lot. The exponential distribution inspection lot shall consist of capacitors of the same style from the same production line or lines, of the same basic design, produced under essentially the same conditions, and offered for inspection during a single work week. Styles CSR09 and CSR13 may be combined for maintenance of FR levels "R" and "S". Each style must be maintained to at least the "P" level. Total hours for both styles combined must justify FR levels "R" or "S". Combinations of case sizes and voltages within a style that may be combined to form a lot are shown in table VI.

4.6.1.1.2 Exponential distribution production lot. The exponential distribution production lot shall consist of all capacitors of the same style, voltage rating, and nominal capacitance value. The manufacture of all parts in the lot shall have been started, processed, assembled, and tested as a group. Lot identity shall be maintained throughout the manufacturing cycle.

4.6.1.1.3 Weibull distribution inspection/production lot. The Weibull distribution inspection/production lot shall consist of capacitors of the same style, voltage rating, design, and nominal capacitance value produced in the same case size. Manufacture of all parts in the lot shall have been started, processed, assembled, and tested as a group. Lot identity shall be maintained throughout the manufacturing cycle. All anodes shall be fabricated from a single identifiable powder lot.

TABLE VI. Voltage groups.

Style	Voltage group	Case size	Voltage range
			Volts
CSR09,	1	A and B; A1 and B1; W and X	6 through 35
CSR13,	2	C and D; Y and Z	6 through 50
or	3	A and B; A1 and B1; W and X	50 through 100
CSR91	4	C and D; Y and Z	75 and 100
CSR23	5	A and B	6 through 20
or	6	C and D	6 through 20
CSR33	7	A and B	35 and 50
	8	C and D	35 and 50
CSR21	9	C and D	6 through 20
	10	C and D	35 and 50

4.6.1.2 Group A inspection. Group A inspection shall consist of the inspections specified in table VII or table VIII and shall be made on the same set of sample units, in the order shown.

4.6.1.2.1 Subgroup 1 tests.

4.6.1.2.1.1 Exponential. Subgroup 1 tests shall be performed on a production lot basis on 100 percent of the product supplied under this specification. Capacitors failing the tests of subgroup 1 shall be removed from the lot. If during the 100 percent inspection, screening requires that more than 5 percent of the capacitors be discarded due to catastrophic or dc leakage failures, the entire lot shall be rejected.

4.6.1.2.1.2 Weibull. Subgroup 1 tests shall be performed on an inspection/production lot basis (see 4.6.1.1.3) on 100 percent of the product supplied under this specification. Requirements for the infant mortality period and Weibull failure rate level grading shall be in accordance with 4.7.25.

4.6.1.2.1.3 Manufacturer's production inspection. If the manufacturer performs tests equal to or more stringent than those specified in subgroup 1 of table VII and table VIII, subgroup 1 of group A inspection may be waived and the data resulting from the manufacturer's production tests may be used instead as the final step of this production process. Authority to waive the subgroup 1 inspection shall be granted by the qualifying activity only. The following criteria shall be complied with:

a. Tests conducted by the manufacturer during production shall be clearly identical to or more stringent than those specified for subgroup 1. Test conditions shall be equal to or more stringent than those specified for subgroup 1.

b. Manufacturer subjects 100 percent of the product supplied under this specification to their production tests.

c. The parameters measured and the failure criteria shall be the same or more stringent than those specified herein.

d. The lot rejection criteria are the same or more stringent than that specified herein.

e. Once approved, the manufacturer shall not change the test procedures or criteria without prior notification and concurrence of the qualifying activity.

TABLE VII. Group A inspection (exponential distribution).

Inspection	Requirement paragraph	Test method paragraph	Sampling procedure
Subgroup 1 1/			
Thermal shock	3.6	4.7.2	100 percent inspection
Surge current options C or F (when specified in PIN)	3.30	4.7.26	
Voltage aging (exponential only, see 3.1)	3.7	4.7.3	
Surge current options A, B, D, or E (when specified in PIN) 4/	3.30	4.7.26	
Seal 2/	3.9	4.7.4	
Radiographic inspection 2/ 3/	3.10	4.7.5	
Subgroup 2			
Mechanical examination (physical dimensions only)	3.5	4.7.1	5 samples 0 failures
Subgroup 3			
Visual examination:			
Materials	3.4	4.7.1	13 samples 0 failures
Marking	3.31		
Workmanship	3.33		
Subgroup 4 2/			
Stability at low and high temperatures	3.23	4.7.18	13 samples 0 failures
Subgroup 5 2/			
Surge voltage	3.24	4.7.19	13 samples 0 failures
Subgroup 6			
Solderability	3.19	4.7.14	13 samples 0 failures

1/ 5 percent PDA applicable to failure rate levels "P", "R", and "S" only.
2/ Not applicable to style CSR91.
3/ 5 percent PDA not applicable to radiographic inspection.
4/ If the PIN contains no surge current option letter, then the testing will be per MIL-PRF-39003 and the applicable specification sheet. If there is a surge current option letter specified, then the table IV requirement takes precedence over the testing called out in the applicable specification sheet.

TABLE VIII. Group A inspection (weibull distribution).

Inspection	Requirement paragraph	Test method paragraph	Sampling procedure
Subgroup 1			
Thermal shock	3.6	4.7.2	100 percent inspection 2/
Surge current options C, or F (when specified in PIN)	3.30	4.7.26	
Voltage aging (style CSR91 only) 3/	3.7	4.7.3	
Weibull FR level grading 1/	3.8	4.7.25	
Surge current options A, B, D, or E (when specified in PIN) 5/	3.30	4.7.26	
Seal 1/	3.9	4.7.4	
Radiographic inspection 1/ 3/	3.10	4.7.5	
Subgroup 2			
Mechanical examination (physical dimensions only)	3.5	4.7.1	5 samples 0 failures
Subgroup 3			
Visual examination:			
Materials	3.4	4.7.1	13 samples 0 failures
Marking	3.31		
Workmanship	3.33		
Subgroup 4 1/ 4/			
Stability at low and high temperatures	3.23	4.7.18	13 samples 0 failures
Subgroup 5			
Solderability	3.19	4.7.14	13 samples 0 failures

1/ Not applicable to style CSR91.
2/ Exempt from PDA; rejects shall not be delivered on the contract or purchase order.
3/ Not applicable to Weibull graded units marked with exponential M-level FR dash numbers.
4/ Sampling need only conform to the requirements of 4.6.1.1.1 exponential distribution inspection lot.
5/ If the PIN contains no surge current option letter, then the testing will be per MIL-PRF-39003 and the applicable specification sheet. If there is a surge current option letter specified, then the table IV requirement takes precedence over the testing called out in the applicable specification sheet.

4.6.1.2.2 Subgroup 2 tests.

4.6.1.2.2.1 Sampling plans. Subgroup 2 tests shall be performed on an inspection lot basis. Samples subjected to subgroup 2 shall be selected in accordance with table VII or table VIII. In the event of one or more failures, the lot shall be rejected.

4.6.1.2.2.2 Rejected lots. The rejected inspection lot shall be segregated from new lots and those lots that have passed inspection. The rejected lot shall be 100 percent inspected for those quality characteristics found defective in the sample. Any defectives found shall be removed from the lot. A new sample of 5 parts shall then be randomly selected. If one or more defects are found in this second sample the lot shall be rejected and shall not be supplied to the specification.

4.6.1.2.2.3 PPM calculations. The manufacturer shall establish a ppm system in accordance with 3.3.2 for assessing and calculating average outgoing quality of capacitors. A ppm rate combining capacitance, DF, and DCL shall be assessed for lots that have passed the group A inspection. The manufacturer's ppm system shall also address rectification procedures for lots failing ppm assessment. Data from the rectification process shall not be used to calculate ppm.

4.6.1.2.3 Subgroup 3. Subgroup 3 shall be performed on an inspection lot basis on 13 sample units with no failures allowed.

4.6.1.2.3.1 Rejected lots. The entire rejected inspection lot shall be segregated from new inspection lots and those inspection lots that have passed inspection. The rejected inspection lot shall be 100 percent inspected for those quality characteristics found defective in the sample. Any defectives found shall be removed from the lot. A new sample of 13 parts shall then be randomly selected. If one or more defects are found in this second sample, the lot shall be rejected and shall not be supplied to the specification.

4.6.1.2.3.2 Subgroup 4. Subgroup 4 shall be performed on an inspection lot basis on 13 sample units with no failures allowed.

4.6.1.2.3.3 Rejected lots. If there are one or more defects, the inspection lot shall be rejected. The manufacturer may use one or more of the following options to rework the lot.

a. The individual production lot, or lots, from which the defect originated shall be individually subjected to the subgroup 4 test as required in 4.6.1.2.3.2. Production lots that pass the subgroup 4 test are available for shipment. Production lots that fail subgroup 4 may be reworked.

b. The manufacturer shall submit the failed inspection lot to a 100 percent reprocessing. Thirteen additional samples shall then be selected and subjected to the subgroup 4 test with no defects allowed. If the inspection lot fails this test, the inspection lot shall be considered rejected and shall not be furnished against the requirements of this specification.

4.6.1.2.4 Subgroup 5 test (exponential only). Subgroup 5 test shall be performed with 13 sample units from the subgroup 3 or subgroup 4 tests, with no failures allowed.

4.6.1.2.4.1 Rejected lots. The rejected lot shall be segregated from new lots and those lots which have passed inspection. If a lot is rejected, another 13 samples shall be inspected. If the second lot has one or more failures, the entire production lot shall be rejected and shall not be delivered on the contract or purchase order.

4.6.1.2.4.2 Disposition of sample units. Sample units which have been subjected to subgroup 5 shall not be delivered on the contract or purchase order.

4.6.1.2.5 Subgroup 5 (Weibull only) or subgroup 6 (exponential only) (solderability).

4.6.1.2.5.1 Sampling plan. Thirteen samples shall be selected randomly from each inspection lot, as defined in 4.6.1.1.1, and subjected to the solderability test. The manufacturer may use electrical rejects from the subgroup 1 screening tests for all or part of the samples to be used for solderability testing. If there are one or more defects, the lot shall be considered to have failed.

4.6.1.2.5.2 Rejected lots. If there are one or more defects, the inspection lot shall be rejected. The manufacturer may use one of the following options to rework the lot:

a. Each production lot that was used to form the failed inspection lot shall be individually submitted to the solderability test as required in 4.6.1.2.5.1. Production lots that pass the solderability test are available for shipment. Production lots failing the solderability test may be reworked only if submitted to the solder dip procedure in 4.6.1.2.5.2b.

b. The manufacturer shall submit the failed lot to a 100 percent solder dip using an approved solder dip process in accordance with 3.5.2.1. Following the solder dip, the electrical measurements required in group A subgroup 1 tests shall be repeated on 100 percent of the lot. (NOTE: If radiographic inspection and hermetic seal are required in the group A, subgroup 1 tests, these tests shall be repeated.) Thirteen additional samples shall then be selected and subjected to the solderability test with zero defects allowed. If the lot fails this solderability test, the lot shall be considered rejected and shall not be furnished against the requirements of this specification.

4.6.1.2.5.3 Disposition of samples. The solderability test is considered a destructive test and samples submitted to the solderability test shall not be supplied on the contract.

4.6.1.3 Group B inspection (polarized units only) (exponential only). Group B inspection shall consist of the test specified in table IX and shall be made on sample units which have been subjected to and have passed the group A (subgroups 1, 2, and 3) inspections.

TABLE IX. Group B inspection.

Inspection	Requirement paragraph	Test method paragraph
Life (at +85°C)	3.25.2.2	4.7.20.2.1

4.6.1.3.1 Sampling plan. A sample shall be selected at random from each inspection lot that has passed group A (subgroups 1, 2, and 3) inspections. The sample chosen shall be representative of each voltage group with the highest capacitance value in each case size represented in the lot (see 4.6.1.1.1). Sampling for conformance life test shall be as specified herein. The detailed conformance procedures of MIL-STD-690, with the following details and exceptions, shall apply:

a. Lot sampling: 110 samples.

b. Duration of lot conformance FR test: 240 hours.

c. Failure criteria: As specified in 3.25; one failure per lot.

d. Permissible combination of voltage rating and case size: As specified in 4.6.1.1.1.

e. Disposition of samples and inspection lot: Sample units which have been subjected to group B inspection may be delivered on the contract or purchase order, provided they are 100-percent inspected to verify that they meet all of the requirements listed in table VII, subgroup 3, and that the dissipation factor, capacitance, DCL, and ESR (when applicable) are within the initial limits as specified (see 3.1). The inspection lot may be shipped upon completion of lot conformance FR test.

4.6.1.3.2 Extended life. In addition, a minimum of 10 units shall be selected at random from each inspection lot and subjected to the extended life test specified in 4.7.20.2.2. The manufacturer may increase this sample size if desired in order to develop the necessary number of unit hours of data for maintenance or extension of FRL qualification. The sample size may vary over the minimum from lot to lot at the manufacturer's option. The units selected for the extended life test may be from those subjected to group B inspection or from other units in the lot. In any case, the units to be subjected to the extended life test shall be predesignated before any life tests are initiated. The extended life test may be initiated periodically with units accumulated from each lot, or may be initiated on a lot-by-lot basis. The units selected for extended life test from each lot shall be representative of the capacitance values, case sizes, and voltages included in the lot to the maximum extent possible. In any case, over the production period covered by the maintenance of qualification requirements, the data shall be representative of the case sizes, voltages, and range of values produced.

4.6.1.3.3 Failure in group B inspection. If an inspection lot is rejected as a result of failure to pass group B inspection, the lot shall not be resubmitted. Even though the lot has been rejected, those units which were predesignated for extended life testing shall remain or be placed on test for the full length of time.

4.6.2 Periodic inspection. Periodic inspection shall consist of group C inspection. Except where the results of these inspections show noncompliance with the applicable requirements (see 4.6.2.1.3), delivery of products which have passed groups A and B inspections shall not be delayed pending the results of these periodic inspections.

4.6.2.1 Group C inspection. Group C inspection shall consist of the tests specified in table X, in the order shown. Group C inspection shall be made on sample units selected from inspection lots which have passed the group A inspection for nonpolarized units, and Weibull distribution inspection/production lots; and groups A and B inspections for polarized units (exponential distribution) inspection lots.

4.6.2.1.1 Sampling plan.

4.6.2.1.1.1 Polarized units. There shall be 72 sample units of each style (84 sample units for CSR21) taken from production every 3 months and subdivided as specified for the subgroups listed in table X and subjected to the tests specified in those subgroups, in the order shown. The maximum and minimum case sizes manufactured during those months shall be represented in at least the approximate ratio of production, except for subgroup 1. The sample for subgroup 1 shall be composed of a minimum of three pieces of any one case size, and all case sizes shall receive subgroup 1 testing at least once during the six-month reporting period. Allowable failures shall be as specified in table X.

TABLE X. Group C inspection.

Inspection	Requirement paragraph	Test method paragraph	Number of samples	Number of failures allowed
Subgroup 1 1/				
Shock (specified pulse)	3.15	4.7.10		
Vibration, high frequency	3.16	4.7.11	12	
Thermal shock and immersion	3.18	4.7.13		
Subgroup 2 2/				
Terminal strength	3.20	4.7.15		
Resistance to solvents	3.27	4.7.22		1 3/
Resistance to soldering heat	3.28	4.7.23	12	
Moisture resistance	3.21	4.7.16		
Sleeving	3.22	4.7.17		
Subgroup 3				
Life (at +125°C) (exponential only)	3.25.2.2	4.7.20.2.2	24	
Subgroup 4				
Ripple current (CSR21 only)	3.29	4.7.24	12	1
Subgroup 5 1/				
Life (at +125°C)	3.25.2.3	4.7.20.2.3	24	1

1/ If the manufacturer can demonstrate that this test has been performed five consecutive times with zero failures, the frequency of this test, with the approval of the qualifying activity, can be performed on an annual basis. If the design, material, construction, or processing of the part is changed, or if there are any quality problems or failures, the qualifying activity may require resumption of the original test frequency.

2/ If the manufacturer can demonstrate that these tests have been performed five consecutive times with zero failures, these tests, with the approval of the qualifying activity, can be deleted. The manufacturer, however, shall perform these tests every 3 years after the deletion as part of long term design verification. If the design, material, construction, or processing of the part is changed, or if there are any quality problems, the qualifying activity may require resumption of the specified testing. Deletion of testing does not relieve the manufacturer from meeting the test requirements in case of dispute.

3/ This failure shall not be for the shock (specified pulse) or the vibration, high frequency test.

4.6.2.1.2 Disposition of sample units. Sample units which have been subjected to group C inspection shall not be delivered on the contract or purchase order.

4.6.2.1.3 Noncompliance. If a sample fails to pass group C inspection, the manufacturer shall notify the qualifying activity and cognizant inspection activity of such failure and take corrective action on the materials or processes, or both as warranted, and on all units of product which can be corrected and which are manufactured using essentially the same materials and processes, and which are considered subject to the same failure. Acceptance and shipment of the product shall be discontinued until corrective action acceptable to the qualifying activity has been taken. After the corrective action has been taken, group C inspection shall be repeated on additional sample units (all inspections, or the inspection which the original sample failed, at the option of the qualifying activity). Group A and group B inspections may be reinstituted; however, final acceptance and shipment shall be withheld until the group C inspection has shown that the corrective action was successful. In the event of failure after reinspection, information concerning the failure shall be furnished to the cognizant inspection activity and the qualifying activity.

4.7 Methods of inspection.

4.7.1 Visual and mechanical inspection. Capacitors shall be examined from a distance of 6 inches in normal room lighting and without the aid of magnification to verify that the materials, design, construction, physical dimensions, marking, and workmanship are in accordance with the applicable requirements (see 3.1, 3.4, 3.5, 3.31, and 3.33). If closer examination is required, the capacitors shall be examined at no greater than 4X magnification.

4.7.2 Thermal shock (see 3.6). Capacitors shall be tested in accordance with method 107 of MIL-STD-202. The following shall apply:

a. Special mounting: Not applicable.

b. Test condition letter: B.

c. Measurements before and after cycling: Not applicable.

4.7.3 Voltage aging (see 3.7). Capacitors shall be placed in a suitable test chamber maintained at +85°C and shall be subjected to the applications of a minimum of rated dc voltage for a minimum of 40 hours, except nonpolarized capacitors (see 3.1) shall be tested for 20 hours, minimum, in each direction. The aging circuit shall have a total resistance, exclusive of the capacitor, but including fuse wiring and internal impedance of the power supply, of not more than 3 ohms under any operating condition. Capacitors shall be removed from the chamber, stabilized at room ambient conditions (see 4.3.1), and the dc leakage, capacitance, dissipation factor, and ESR (CSR21 and CSS21 only) shall then be measured as specified in 4.7.6, 4.7.7, 4.7.8, and 4.7.9, respectively.

4.7.4 Seal (polarized capacitors only, see 3.1) (see 3.9). Capacitors shall be tested in accordance with method 112 of MIL-STD-202. The following detail and exception shall apply:

a. Test condition letter: A, D, or equivalent.

b. Examination after test: Not applicable.

c. Magnification: Not applicable.

This test may be accomplished prior to the addition of the sleeve.

4.7.5 Radiographic inspection (polarized capacitors only, see 3.1) (not applicable for FRL "M") (see 3.10). Capacitors shall be tested in accordance with method 209 of MIL-STD-202. The following details shall apply:

a. Radiographic quality: Sufficient definition to determine that specimens are free from defects specified in 3.10 and render a clear sharp image of the penetrameter.

b. Image-quality indicator: An image of the penetrameter shall be included on each radiograph. The penetrameter may be made from a sample capacitor of the same style as the capacitor being radiographed,

with an AWG number 48 copper, gold, or tungsten wire mounted across the capacitor body, or it may be fabricated in accordance with, or be equivalent to, the example in figure 1.

c. Position of specimen: One plane at 90° rotation perpendicular to the longitudinal axis. If failures exceed 10 percent, x-ray shall be performed in two planes on only those subsequent lots having the case size, which caused the excess failure. The manufacturer may return to one-plane testing when three sequential lots of that case size meet the 10 percent failure rate.

d. Evaluation of images:

(1) Special kind of viewing equipment: Magnifying glass.

(2) Magnification: 10X.

(3) Defects to be sought in specimen: As specified in 3.10. Examples of acceptable parts and minor and major defects are shown in figures 2 through 5, respectively.

e. Nonfilm techniques and real-time x-ray: The use of nonfilm techniques and real time x-ray is permitted if the equipment is capable of producing results of equal quality when compared with film techniques, and all requirements of this specification are complied with, except those pertaining to the actual film. Radiographic Image-quality indicators, as specified in 4.7.5b, may be used at the beginning and end of each inspection lot if equipment settings are not modified.

4.7.6 DC leakage (see 3.11). DC leakage shall be measured using the dc rated voltage ±2 percent at the applicable test temperature (see 3.1), after a maximum electrification period of 5 minutes. A 1,000-ohm resistor shall be placed in series with the capacitor to limit the charging current. A steady source of power, such as a regulated power supply, shall be used. Measurement accuracy shall be within ±2 percent or 0.02 microampere, whichever is greater (see 4.4.3). For nonpolarized capacitors, measurements shall be made in both directions.

4.7.7 Capacitance (see 3.12). Capacitors shall be tested in accordance with method 305 of MIL-STD-202. The following details shall apply:

a. Test frequency: 1,000 ±100 Hz for CSR21 and CSS21 only and 120 ±5 Hz for all other styles.

b. Limit of accuracy: Measurement accuracy shall be within ±2.0 percent of the reading for ±10 and ±20 percent capacitance tolerance items and ±0.5 percent of the reading for ±5 percent capacitance tolerance items.

c. Magnitude of polarizing voltage: Unless otherwise specified (see 3.1), maximum dc bias shall be 2.2 volts for all ac measurements. The magnitude of the ac voltage shall be limited to 1.0 volt rms.

4.7.8 Dissipation factor (see 3.13). The dissipation factor shall be measured at the frequency specified in 4.7.7a, by means of a polarized capacitance bridge. The inherent accuracy of the measurement shall be ± (2 percent actual value +0.001).

4.7.9 Equivalent series resistance (ESR) (styles CSR21 and CSS21 only) (see 3.14). The ESR at the applicable temperature shall be measured directly or determined from measurements obtained from a bridge. The following details shall apply:

a. Test temperature and tolerance: +25°C ±5°C.

b. Test frequency: 100 kHz ±5 kHz.

c. Limit of accuracy: Measurement accuracy shall be within ±5.0 percent of the reading.

d. Magnitude of polarizing voltage: Unless otherwise specified (see 3.1), the maximum dc bias shall be 2.2 volts for all ac measurements. The magnitude of the ac voltage shall be limited to 0.5 volt rms maximum.

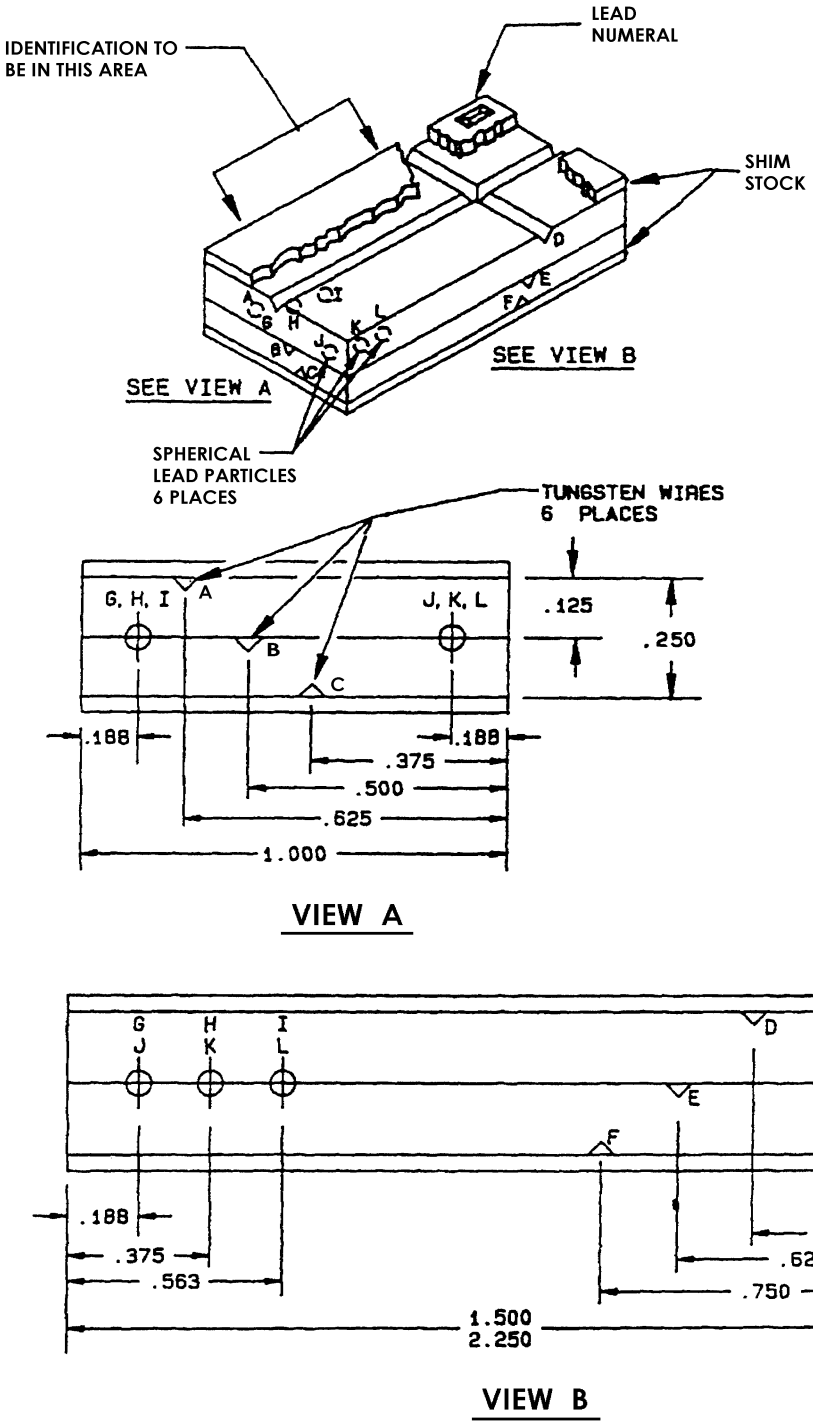

Inches	mm
.125	3.18
.188	4.78
.250	6.35
.375	9.53
.500	12.70
.563	14.30
.625	15.88
.750	19.05
1.000	25.40
1.500	38.10
2.250	57.15

FIGURE 1. Image qualify indicator (optional).

TABLE of image quality indicators.

Tungsten wire diameters						Lead particle diameters						Steel shim stock
A	B	C	D	E	F	G	H	I	J	K	L	
.002 (0.05)	.001 (0.03)	.0005 (0.013)	.0005 (0.013)	.001 (0.03)	.002 (0.05)	.015 (0.38)	.010 (0.25)	.008 (0.20)	.006 (0.15)	.004 (0.10)	.002 (0.05)	None
"	"	"	"	"	"	"	"	"	"	"	"	.002 (0.05)
"	"	"	"	"	"	"	"	"	"	"	"	.005 (0.13)
"	"	"	"	"	"	"	"	"	"	"	"	.007 (0.18)
.003 (0.08)	.002 (0.05)	.001 (0.03)	.001 (0.03)	.002 (0.05)	.003 (0.08)	"	"	"	"	"	"	.010 (0.25)
.003 (0.08)	.002 (0.05)	.001 (0.03)	.001 (0.03)	.002 (0.05)	.003 (0.08)	"	"	"	"	"	"	.015 (0.38)
.005 (0.13)	.003 (0.08)	.002 (0.05)	.002 (0.05)	.003 (0.08)	.005 (0.13)	"	"	"	"	"	"	.025 (0.64)
.005 (0.13)	.003 (0.08)	.002 (0.05)	.002 (0.05)	.003 (0.08)	.005 (0.13)	"	"	"	"	"	"	.035 (0.89)

NOTES:

1. Dimensions are in inches.
2. Metric equivalents are given for general information only.
3. Metric equivalents are in parentheses.
4. Wires to be tungsten, shim stock to be carbon steel, particles to be lead. Center section to be .125 inch (3.18 mm) layers of clear acrylic plastic, bonded with clear plastic cement of low X-ray density. Fasteners may be used within .250 (6.35 mm) or less from each corner, but shall not interfere with end use of the penetrameter. Bottom surface shall be flush.
5. All dimensions shown are ±.005 (0.13 mm), except wires and shim stock, which shall be within standard mil tolerances, and lead particles which shall be ±.0002 (0.005 mm). Groove details are not critical except that wire must be embedded flush or below surface of plastic and centered at location shown. Particle-hole sizes are not critical, but should not exceed .031 (0.79 mm) in diameter and depth, and must be centered as shown within ± .005 (0.13 mm).
6. Additional layers of shim stock may be used as necessary.
7. Identification marking shall be permanent and legible. Location and size of character is not critical but shall not interfere with or obscure the radiographic image details.

FIGURE 1. Image quality indicator (optional) - Continued.

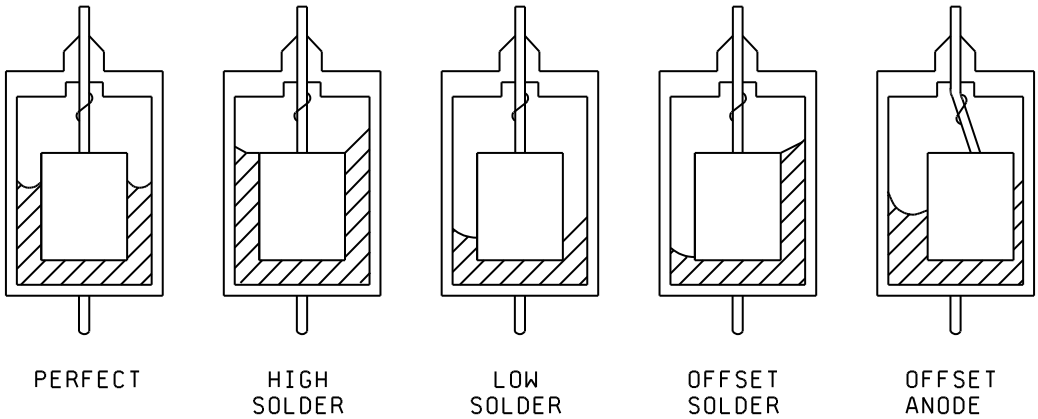

FIGURE 2. Acceptable parts.

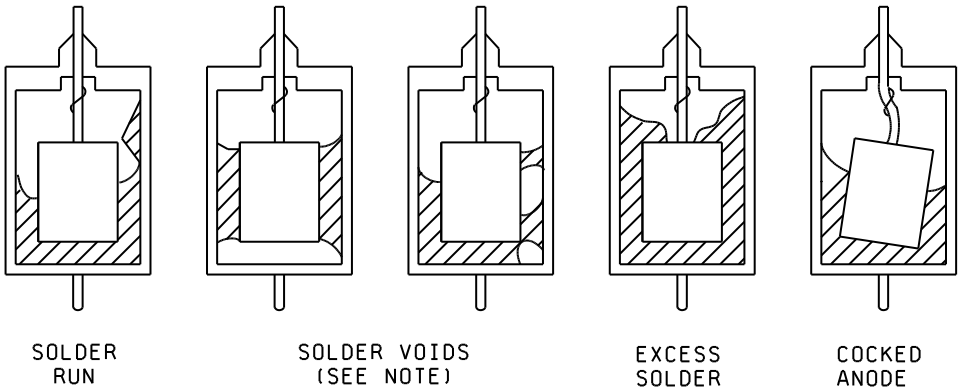

NOTE: Voids in the anchor solder are permitted as long as each side is supported by at least 40 percent coverage of the anode length.

FIGURE 3. Minor defects - acceptable.

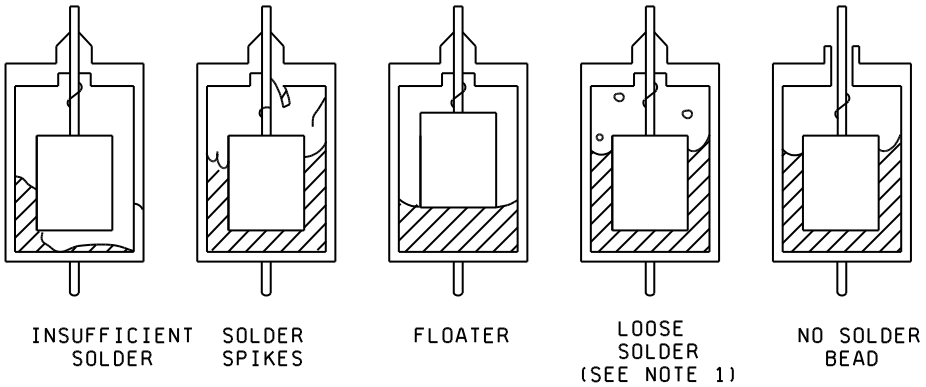

FIGURE 4. Major defects - rejectable.

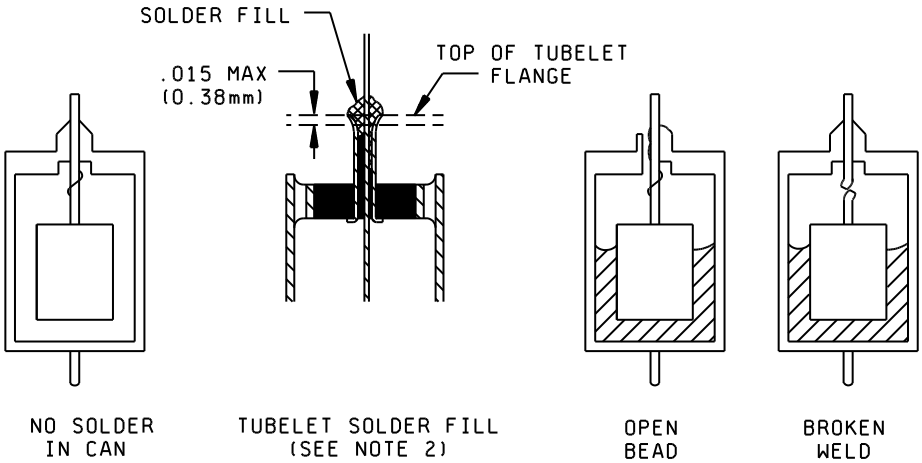

NOTES:

1. Solder balls are particles that are rejectable if they are .01 inch (0.3 mm) or larger in the largest dimension.
2. Minimum solder fill shall not be less than one lead diameter, exclusive of voids. The top of the fill may extend above the tubelet but cannot be greater than .015 inch (0.38 mm) below the top of the tubelet, and the wicking angle to the lead wire and tubelet shall be positive. Solder shall not extend below the tubelet inside the component.

FIGURE 5. Major defects - rejectable.

4.7.10 Shock (specified pulse) (polarized capacitors only, see 3.1) (see 3.15). Capacitors shall be tested in accordance with method 213 of MIL-STD-202. The following details and exceptions shall apply:

a. Special mounting means: Capacitors shall be rigidly mounted on a mount fixture by the body. (Potting compounds may be used to secure the capacitor body as long as the compound does not support the leads.) Leads shall be secured to rigidly supported terminals, so spaced that the length of each lead from the capacitor is approximately .375 inch (9.52 mm) when measured from the edge of the supporting terminal. Leads shall be within 30° of being parallel. When securing leads, care shall be taken to avoid pinching the leads.

b. Test condition letter: I (100 g peak).

c. Measurements before test: DC leakage, capacitance, dissipation factor, and ESR (styles CSR21 and CSS21 only) shall meet the requirements of 3.11, 3.12, 3.13, and 3.14, respectively.

d. Measurements and electrical loading during shock: During the test, observations shall be made to determine intermittent contact or arcing, or open- or short-circuiting. Detecting equipment shall be sufficiently sensitive to detect any interruption with a duration of 0.5 ms or greater. The dc rated voltage shall be applied to the capacitors during the test.

e. Examination after test: Capacitors shall be visually examined for evidence of arcing, breakdown, and mechanical damage.

4.7.11 Vibration, high frequency (polarized capacitors only, see 3.1) (see 3.16). Capacitors shall be tested in accordance with method 204 of MIL-STD-202. The following details and exceptions shall apply:

a. Mounting of specimens: Capacitors shall be securely mounted as specified in 4.7.10a.

b. Electrical load conditions: During the test, the specified dc rated voltage (see 3.1), shall be applied to the capacitors.

c. Test condition letter: D (20 g).

d. Duration and direction of motion: Four hours in each of two mutually perpendicular directions (total of 8 hours), one parallel and the other perpendicular to the cylindrical axis.

e. Measurements during vibration: Electrical measurement shall be made to determine intermittent operation, or open- or short-circuiting for the duration of the last cycle. Detecting equipment shall be sufficiently sensitive to detect any interruption with a duration of 0.5 ms or greater.

f. Measurements after vibration: Not applicable.

g. Examination after test: Capacitors shall be visually examined for evidence of mechanical damage.

4.7.12 Salt atmosphere (corrosion) (see 3.17). Capacitors shall be tested in accordance with method 101 of MIL-STD-202. The following details and exceptions shall apply:

a. Application salt solution: 5 percent.

b. Test condition letter: B (48 hours).

c. Measurements after exposure: Not applicable.

d. Examination after test: Capacitors shall be visually examined for evidence of corrosion or other defects that will affect life or serviceability.

4.7.13 Thermal shock and immersion (polarized capacitors only, see 3.1) (see 3.18).

4.7.13.1 Thermal shock. Capacitors shall be tested in accordance with method 107 of MIL-STD-202. The following details and exceptions shall apply:

a. Conditioning prior to first cycle: 15 minutes at the inspection conditions specified in 4.3.1.

b. Test condition letter: B.

c. Measurements before and after cycling: Not applicable.

4.7.13.2 Immersion. Following temperature cycling, capacitors shall be tested in accordance with method 104 of MIL-STD-202. The following details and exceptions shall apply:

a. Test condition letter: B.

b. Measurements after final cycle: Within 30 minutes after removal from the final immersion bath, the dc leakage, capacitance, and dissipation factor shall be measured as specified in 4.7.6, 4.7.7, and 4.7.8, respectively.

c. Examination after test: Capacitors shall be visually examined for evidence of corrosion, mechanical damage, and obliteration of marking.

4.7.14 Solderability (polarized capacitors only, see 3.1) (see 3.19). Capacitors shall be tested in accordance with method 208 of MIL-STD-202. The following details shall apply.

Number of terminations of each part to be tested: Two, as follows:

(1) Negative leads: 0.125 inch ±.025 inch (3.18 mm ± 0.64 mm) from end of case.

(2) Positive leads: 0.125 inch ±.025 inch (3.18 mm ± 0.64 mm) from the point of "clean lead" emerging from the seal eyelet.

4.7.15 Terminal strength (polarized capacitors only, see 3.1) (see 3.20).

4.7.15.1 Pull. Capacitors shall be tested in accordance with method 211 of MIL-STD-202. The following details shall apply:

a. Test condition letter: A.

b. Method of holding: The body of the capacitor shall be secured.

c. Applied force: Three pounds.

4.7.15.2 Twist. Capacitors shall be tested in accordance with method 211 of MIL-STD-202. The following detail and exception shall apply:

a. Test condition letter: D.

b. Number of rotations: Three.

Capacitors shall be visually examined for loosening of terminals and permanent damage to the terminals, terminal welds, or terminal solder, as applicable.

4.7.16 Moisture resistance (polarized capacitors only, see 3.1) (see 3.21). Capacitors shall be tested in accordance with method 106 of MIL-STD-202. The following details and exceptions shall apply:

a. Special mounting: Not applicable.

b. Initial measurements: DC leakage, capacitance, and dissipation factor shall be measured as specified in 4.7.6, 4.7.7, and 4.7.8, respectively.

c. Polarization and loading voltages: Not applicable.

d. Exception: Step 7b; method 106 of MIL-STD-202, not required.

e. Final measurements: After the final cycle and within 2 to 6 hours after removal of the capacitors from the humidity chamber, the dc leakage, capacitance, and dissipation factor shall be measured as specified in 4.7.6, 4.7.7, and 4.7.8, respectively, at the inspection conditions specified in 4.3.1.

f. Examinations after test: Capacitors shall be examined for evidence of corrosion, mechanical damage, and obliteration of marking.

4.7.17 Sleeving (polarized capacitors only, see 3.1) (see 3.22).

4.7.17.1 Dielectric strength. The capacitors shall be placed in a fixture, which will provide intimate contact with a minimum of 80 percent of the sleeving covering the rounded portion of the case. A dc potential of 2,000 volts shall then be applied, with a maximum leakage of 20 μA allowed between the capacitor case and the fixture. The voltage shall be applied uniformly at the rate of 500 volts per second. Electrification time shall be 1 minute ± 5 seconds.

4.7.17.2 Insulation resistance. The capacitors shall be placed in a V-block and the insulation resistance between the case and V-block shall be measured with a polarizing voltage of 500 ± 50 volts dc for 1 minute +0, -15 seconds. The measurement shall be repeated five times, rotating the unit in the block each time.

4.7.18 Stability at low and high temperatures (polarized capacitors only, see 3.1) (see 3.23). Capacitors shall be measured for dc leakage, capacitance, and dissipation factor as specified in 4.7.6, 4.7.7, and 4.7.8, respectively, at each of the temperatures specified in table XI, except that dc leakage measurements at -55°C (step 2) are not required. After the measurements of capacitance and dissipation factor have been made at the -55°C temperature (step 2), rated voltage shall be applied through a 33-ohm load for a minimum of 5 minutes. The capacitors shall be brought to thermal stability at each test temperature. Thermal stability will have been reached when no further change in capacitance is observed between two successive measurements taken at 15-minute intervals.

TABLE XI. Temperatures for stability test.

Step	Test temperature
1	+25°C (±2°C)
2	-55°C (+0°C, -3°C)
3	+25°C (±2°C)
4	+85°C (+4°C, -0°C)
5	+125°C (+4°C, -0°C)
6	+25°C (±2°C)

4.7.19 Surge voltage (polarized capacitors only, see 3.1) (see 3.24). Capacitors shall be subjected to 1,000 cycles of the applicable surge voltage as follows:

DC rated voltage at +85°C (volts)	DC surge voltage at +85°C (volts)
6	8
10	13
15	20
20	26
35	46
50	65
75	98
100	130

The ambient temperature during cycling shall be +85°C. Each cycle shall consist of a 30-second surge voltage application followed by a 30-second discharge period. Voltage application shall be made through a 33-ohm resistor. The tolerance of the resistor shall be ±5 percent. Each surge voltage cycle shall be performed in such a manner that the capacitor is shorted terminal-to-terminal through a copper bar, or an equivalent low resistance at the end of the 30-second application. An alternate method of shorting the capacitors is discharge through the same resistance that is utilized for charging. After the final cycle, the capacitors shall be stabilized at the inspection conditions specified in 4.3.1, and the dc leakage, capacitance, and dissipation factor shall be measured as specified in 4.7.6, 4.7.7, and 4.7.8, respectively.

4.7.20 Life (polarized capacitors only, see 3.1) (see 3.25).

4.7.20.1 For qualification inspection (see 3.25.1). Capacitors shall be tested in accordance with method 108 of MIL-STD-202. The following details and exception shall apply:

a. Distance of temperature measurements from specimens, in inches: Not applicable.

b. Method of mounting: Capacitors shall be mounted by their leads.

c. Test temperature and tolerance: Capacitors being subjected to the test of group VI of table V shall be tested at +125°C +4°C, -0°C. Capacitors being subjected to the test of group VII of table V shall be tested at +85°C +4°C, -0°C.

d. Operating conditions: A minimum of rated dc voltage (see 3.1) or derated voltage at +125°C, as applicable (see table I), shall be applied gradually (not to exceed 5 minutes either by a slow build-up of the voltage or through a resistor which shall be shorted out within 5 minutes.) Voltage shall be applied continuously, except for measurement periods. The impedance of the voltage source, as seen from the terminals of each capacitor, shall not exceed 3 ohms (1 ohm for style CSR33). Storage batteries or an electronic power supply capable of supplying at least 1 ampere when a capacitor is shorted shall be used.

e. Test condition letter: F (2,000 hours).

f. Measurement during exposure: DC leakage at the applicable high test temperature shall be made at the following intervals: 0 hours; 240 hours +72 hours, -24 hours; 1,000 hours +72 hours, -24 hours; and 2,000 hours, +96 hours, -0 hours.

g. Measurements after exposure: Capacitors shall be returned to the inspection conditions specified in 4.3.1, and shall be visually examined for evidence of mechanical damage; dc leakage, capacitance, dissipation factor, and ESR (when applicable, see 3.1) shall then be measured as specified in 4.7.6, 4.7.7, 4.7.8, and 4.7.9, respectively (see 3.25.1). In addition, capacitors shall be subjected to the dielectric strength test as specified in 4.7.17.1 following the measurements.

4.7.20.2 For conformance inspection.

4.7.20.2.1 Performance check. Capacitors shall be tested as specified in 4.7.20.1, with the following exceptions:

a. The duration of the test shall be 240 hours.

b. The +85°C rated voltage shall be used for this test.

c. The test temperature and tolerance shall be +85°C +4°C, -0°C.

d. The dielectric strength test need not be performed.

4.7.20.2.2 Extended life test (exponential only). Capacitors shall be tested as specified in 4.7.20.1, except that the duration of the test shall be 10,000 hours. DC leakage (at the applicable high test temperature) shall be made at the following intervals: 0 hours; 240 hours, +72 hours, -24 hours; 1,000 hours, +72 hours, -24 hours; 2,000 hours, +96 hours, -24 hours; and every 2,000 hours, +96 hours, -24 hours thereafter until 10,000 hours, +96 hours, -0 hours have elapsed. The final measurements shall be in accordance with 4.7.20.1g.

4.7.20.2.3 Group C. Capacitors shall be tested as specified in 4.7.20.1.

4.7.21 Fungus (polarized capacitors only, see 3.1) (see 3.26). Capacitors shall be tested in accordance with method 508 of MIL-STD-810.

4.7.22 Resistance to solvents (see 3.27). Capacitors shall be tested in accordance with method 215 of MIL-STD-202. The following details shall apply:

a. The marked portion of the capacitor body shall be brushed, with sleeve in place.

b. The number of sample units to be examined shall be as specified in table V or table X, as applicable.

c. Capacitors shall be visually examined for evidence of mechanical damage and obliteration of marking.

4.7.23 Resistance to soldering heat (polarized capacitors only, see 3.1) (see 3.28). Capacitors shall be tested in accordance with method 210 of MIL-STD-202. The following details and exceptions shall apply:

a. Special preparation of the specimen: Both leads shall be dipped in RMA flux (in accordance with IPC-J-STD-004, IPC-J-STD-005 and IPC-J-STD-006) for 5 ±0.5 seconds, and then dipped into solder. The parts shall be immersed to within .075 inch (1.90 mm) ± .025 inch (0.64 mm) of the body.

b. Test condition: C, except that the time shall be 10 seconds, ± 1 second.

c. Measurements after test: After completion of the cleaning process and following a minimum 3-hour cooling period, the dc leakage, capacitance, and dissipation factor shall be measured as specified in 4.7.6, 4.7.7, and 4.7.8, respectively.

d. Examination after test: Capacitors shall be examined for evidence of mechanical damage.

4.7.24 Ripple current (styles CSR21 and CSS21 only) (see 3.29). Capacitors shall be tested in accordance with the following details:

a. Method of mounting: Capacitors shall be mounted by their leads.

b. Test temperature and tolerance: +25°C ± 5°C in a still air enclosure.

c. Operating conditions: A sinusoidal alternating voltage at a frequency of 40 ± 2 kHz shall be superimposed on 50 percent of dc rated voltage so that the peak voltages do not exceed the value of the dc rated voltage of the capacitor. The maximum rated ripple current shall be applied continuously, except for measurement periods. The dc voltage shall be supplied by a regulated power supply free from surges, having a low internal resistance, and shall be applied to each capacitor section through a separate resistor. DC power supply regulation shall remain within ±2 percent or less. AC power source regulation shall be within ± 2 percent or less. AC power source regulation shall be within ± 2 kHz with less than 10 percent distortion.

d. Duration of test: 240 hours.

e. Measurements after exposure: Capacitors shall be returned to the inspection conditions specified in 4.3.1, and shall be visually examined for evidence of mechanical damage; dc leakage, capacitance, dissipation factor, and ESR shall then be measured as specified in 4.7.6, 4.7.7, 4.7.8, and 4.7.9, respectively.

4.7.25 Weibull FR level grading (see 3.8). Capacitors shall be tested in accordance with method 108 of MIL-STD-202. The following details and exceptions shall apply:

a. Distance of the heating source from specimens, in inches: Not applicable.

b. Method of mounting: Capacitors shall be mounted by their leads.

c. Test temperature and tolerance: +85°C +4°C, -0°C.

d. Operating conditions: Accelerated dc voltage, +4 percent, -0 percent, as applicable (see table XII), shall be applied gradually (not to exceed 5 minutes by a slow build-up of the voltage). Maximum nominal acceleration factor (see table XII), 20,000:1. Only the capacitors used in 4.7.25e must be fused. Voltage shall be applied continuously, except for failure count periods. The impedance of the voltage source, as seen from the terminals of each capacitor, shall not exceed 1 ohm. An electronic power supply capable of supplying at least 5 amperes when a capacitor is shorted shall be used. A 1 ampere to 2 ampere fuse shall be connected in series with each capacitor. Slow-blow fuses shall not be used. If separate equipment is used for testing the sample and the rest of the lot, the equipment shall be cross calibrated for temperature, voltage, and time to ensure equivalent test conditions.

e. Minimum sample size for monitoring at beginning of test prior to infant mortal period: 300 pieces, or 100 percent, whichever is less. If the sample size is less than 100 percent, the remainder shall be subjected to the same accelerated dc voltage for the same amount of time.

f. Duration of test: 40 hours minimum. The manufacturer shall record the test start and stop times for each lot tested.

Timing:	Infant mortal period	X_1	X_2	X_3
O----------	O----------	O----------	O----------	O
	5-15 minutes	See 4.7.25h	40 hours minimum	See 4.7.25k

g. Failure definition: A failure is defined as a blown fuse or equivalent.

h. Failure count during test: The lot size (see 4.6.1.1.3) to be graded is established after removal of gross defectives (infant mortality) (5-15 minutes). The first failure count shall be performed at 2 hours, ± 0.3 hour after the test was started. If there are no failures at time X_1, the manufacturer may use one of the following options:

(1) Complete a minimum of 40 hours and compute the failure rate from MIL-STD-690, table II, FRSP-90, based on the number of failures at time X_2, or;

(2) Extend time X_1 from 2 hours to a maximum of 10 hours. A failure cannot be assumed. If there are still no failures, option (1) shall be used, or;

(3) Make one restart at a higher voltage (if applicable) to induce a failure at time X_1. The manufacturer shall assume no previous hours. The restart voltage and time shall be recorded. If there are still no failures, option (1) shall be used. If the sample size is less than 100 percent, the remainder of the lot must be subjected to the final determined restart time and voltage. The number of blown fuses and the time under test shall be recorded to within ±0.1 hour. Calculate the fraction failed, p_1 at time x_1 (see equation 4 (6.6.2)).

i. Failure count after test: A failure count shall be performed after 40 hours minimum after the test was started. The number of blown fuses and the time under test shall be recorded to within ±0.1 hour. Calculate the cumulative fraction failed, p_2 at time, x_2 (see equation 4 (6.6.2)). If there are no failures at time X_2, the manufacturer may use one of the following options:

(1) Assume one failure and calculate the cumulative fraction failed, p_2 at time, x_2 (see equation 4 (6.6.2)), or:

(2) Compute the failure rate from MIL-STD-690, table II FRSP-90, based on the accelerated part hours generated (see 6.6.2, example C), or;

(3) Continue testing. The start and stop times shall be recorded. If there are still no failures, option (2) may be used.

j. Lot failure rate: Determine Z (t) from equation 3 (6.6.1). If the desired failure rate has been achieved, the lot may be removed from test.

k. Continuation grading: If the desired failure rate has not been reached, the lot may be continued on test. The time to reach the failure rate goal may be estimated from equation 5 (see 6.6.2). If the time calculated to reach the goal failure rate is excessive, the lot may be discarded in favor of a new lot. If the lot is continued on test, a new failure rate shall be performed after the extended test. Calculate the cumulative fraction failed, p_3, at time X_3 (see equation 4 (6.6.2)). Determine if the failure rate has been achieved from 4.7.25j.

l. Measurements after exposure: Capacitors shall be removed from the test, stabilized at room ambient conditions (see 4.3.1) and the dc leakage, capacitance, dissipation factor, and ESR (styles CSR21 and CSS21 only) shall be measured as specified in 4.7.6, 4.7.7, 4.7.8, and 4.7.9, respectively.

TABLE XII. Nominal acceleration factors.

Grading stress V_a/V_r 1/	Acceleration factor
1.0000	1.0000
1.1000	6.5355
1.2000	42.7128
1.3000	279.1496
1.4000	1,824.3823
1.5000	11,923.2626
1.5276	20,000.0000

1/ V_a = accelerated voltage.
V_r = rated voltage.

4.7.26 Surge current (when specified in the PIN) (see 3.30). Unless otherwise specified (see 3.1), capacitors shall be subjected to 3 consecutive cycles under the following conditions:

a. Temperature: See table II or table III, as applicable.

b. Rated voltage ± 2 percent shall be applied for 4 ± 1 seconds. The power source shall have an energy storage bank of 50,000 μF (minimum) across the output terminals.

c. The capacitors shall then be discharged for 4 ± 1 seconds to a voltage below 1 percent of the rated voltage.

d. The total dc resistance (excluding the capacitor) including the wiring, fixturing, and output impedance of the regulated power supply to each test position during the charging cycle shall be 1 ± 0.2 ohm.

NOTE: Surge current testing for CSS styles shall be in accordance with the applicable specification sheet.

5. PACKAGING

5.1 Packaging. For acquisition purposes, the packaging requirements shall be as specified in the contract or order (see 6.2). When packaging of materiel is to be performed by DoD or in-house contractor personnel, these personnel need to contact the responsible packaging activity to ascertain packaging requirements. Packaging requirements are maintained by the Inventory Control Point's packaging activities within the Military Service or Defense Agency, or within the military service's system commands. Packaging data retrieval is available from the managing Military Department's or Defense Agency's automated packaging files, CD-ROM products, or by contacting the responsible packaging activity.

6. NOTES

(This section contains information of a general or explanatory nature that may be helpful, but is not mandatory.)

6.1 Intended use. Capacitors covered by this specification are intended mainly for use in filter, bypass, coupling, blocking, and other low-voltage applications (such as transistor circuits) where stability, size, weight, and shelf life are important factors. The dc leakage and dissipation factor of the suggested unit should be taken into consideration when designing transistor, timing, phase-shifting, and vacuum tube grid circuits.

6.1.1 Parallel operation. Operation of capacitors in parallel increases the risk of dc surge current failures in low-impedance circuits. The user is cautioned that the energy stored in a parallel capacitor circuit may discharge through other capacitors in the circuit.

6.1.2 Life degradation. The life of these capacitors is primarily dependent on voltage and temperature. These capacitors should not be used above the derated voltage at maximum rated temperature, +125°C. The FR level at +125°C is not established in this specification; however, proof tests at +125°C are required (see 4.7.20).

6.2 Acquisition requirements. Acquisition documents must specify the following:

a. Title, number, and date of this specification, the applicable specification sheet, and the complete Part or Identifying Number (PIN) (see 1.2.1 and 3.1)

b. Packaging requirements (see 5.1).

c. If gold-plated leads are desired (see MIL-PRF-39003/2).

d. Lead length, if different from that specified. Lead length may be specified to a minimum of 1 inch long for use in tape and reel automatic insertion equipment.

6.3 Qualification. With respect to products requiring qualification, awards will be made only for products that are, at the time of award of contract, qualified for inclusion in Qualified Products List whether or not such products have actually been so listed by that date. The attention of the contractors is called to these requirements, and manufacturers are urged to arrange to have the products that they propose to offer to the Federal Government tested for qualification in order that they may be eligible to be awarded contracts or orders for the products covered by this specification. Information pertaining to qualification of products may be obtained from the DLA Land and Maritime, ATTN: VAT, PO Box 3990, Columbus, OH 43218-3990, or by email to vqp.chief@dla.mil.

6.4 Standard capacitor types. Equipment designers should refer to MIL-HDBK-198, "Capacitors, Selection and Use of", for standard capacitor types and selected values chosen from this specification. MIL-HDBK-198 provides a selection of standard capacitors for new equipment design.

6.5 Soldering heat. Caution should be exercised when subjecting these units to soldering heat. Preheat and soldering exposure times and temperatures should be held to a minimum.

6.6 Weibull FR level determination. Weibull FRL determination is based on lot-by-lot 100 percent conformance accelerated failure rate life testing.

For example:

2,500	Capacitors have a voltage rating (V_r) of 50 V dc.
40	hours Weibull life test at 65 V dc voltage applied (V_a);
x 279.1496	acceleration factor for V_a/V_r = 1.3000. (see table XII)
27,914,960	Accelerated part hours.

Weibull FRLs are determined from actual lot performance data. Exponential FRL determination starts with several production lots which may be included in the same inspection lot. For example, 4 production lots of 2,500 capacitors having a voltage rating of 50 V dc are offered for inspection in the same inspection lot.

10,000	Capacitors with a voltage rating (V_r) of 50 V dc;
x 40	hours voltage conditioning at 50 V dc minimum.
400,000	Part hours, however, exponential lot voltage conditioning performance data are not used to determine FRLs.
110	Samples are drawn from the inspection lot of 10,000 capacitors;
x 240	hours group B life test at 50 V dc applied;
26,400	parts hours, however, data accumulated and used to determine FRLs.
10	Samples selected on completing each group B inspection;
x 9760	hours continuation life testing to 10,000 hours.
97,600	Rated condition part hours for FRL maintenance.

Exponential FRLs are based on the aggregate averages of a few samples drawn from many lots maintained in accordance with MIL-STD-690.

Time ordered distribution of failures for solid tantalum capacitors is described by the Weibull equation:

Equation 1

$$F(x) = 1 - \exp\left(-\frac{x^{\beta}}{\alpha}\right)$$

Where: $F(x)$ = Cumulative fraction failed (p) at time x
x = Actual test time
β = Weibull "shape parameter" (beta)
α = Weibull "scale parameter"

This relationship may be plotted on graph paper which is constructed with $\ln x$ as abscissae and $\ln(\ln(1/(1-P)))$ as ordinates. Auxiliary scales allow plotting x and p directly. A straight line is obtained. The slope of this line is β, and the y-intercept is $-\ln\alpha$. Figure 6 illustrates a typical Weibull plot.

At any time x, values for β and p can be obtained and the lot failure rate $Z(x)$ may be calculated from equation 3. A second plot of failure rate versus time may be drafted as indicated on figure 7. The slope of this line is β-1. Acceptable capacitor lots always exhibit decreasing failure rate with respect to time as evidenced by a value of β which is less than unity.

6.6.1 Acceleration factors. In order to provide the equivalent of several thousand hours of testing within a practical time frame, voltage acceleration is employed. It has been determined that the application of voltage in excess of rated voltage produces a higher failure rate than that observed when the devices are operated at the nominal voltage rating. On the Weibull plot, a straight line, parallel to the line representing rated voltage, is obtained. The increased number of failures indicated by the line representing the higher voltage results from increased dielectric stress. The slopes (β) of both lines are essentially the same, but the time (x) required to produce any specified p is reduced as voltage is increased. As a result, acceleration factors may be specified which define the relationship between operation at rated voltage and operation at higher-than-rated voltages. For example, a lot of capacitors having a voltage rating of 50 V dc might be tested at 65 V dc. In this case, the ratio of applied voltage to rated voltage is 1.30, resulting in an acceleration factor (A) of 279. In practical terms, operation of these capacitors for 1 hour at 65 V dc is equivalent to operation at 50 V dc for 279 hours. This relationship may be mathematically represented as:

Equation 2

$$Z(t) = Z(Ax) = \frac{\beta}{\alpha}x^{\beta-1} * \frac{1}{A}$$

In conjunction with equation 1, this function may be restated as:

Equation 3

$$Z(t) = F = \frac{-\beta \ln(1-p)}{x} * \frac{10^5}{A}$$

The 10^5 factor allows for expression of $Z(t)$ in terms of percent per 1,000 hours when x denotes hours. Table XII illustrates a range of acceleration factors normally used for Weibull FR determination.

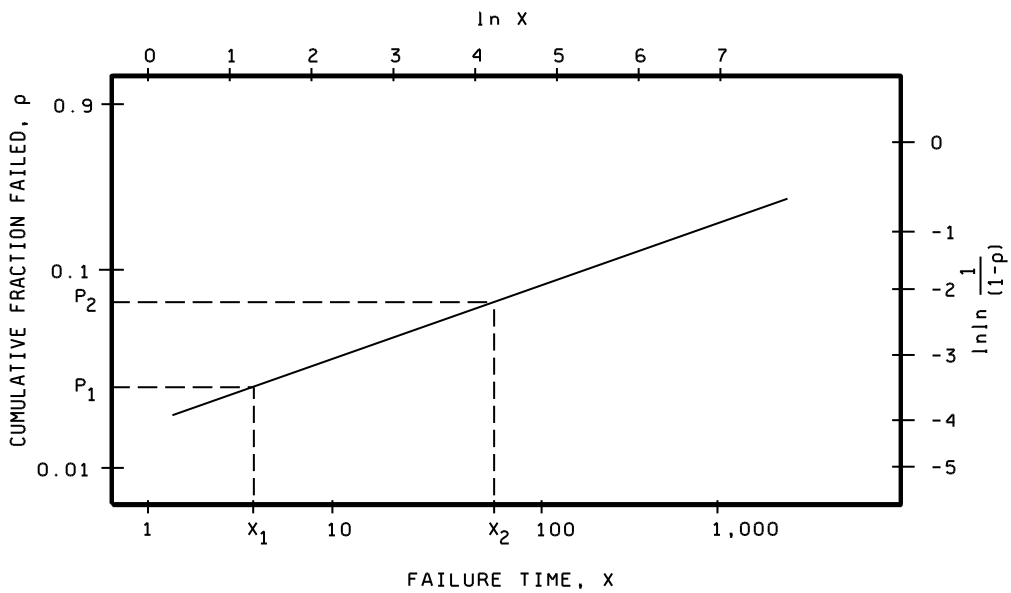

FIGURE 6. Typical Weibull plot.

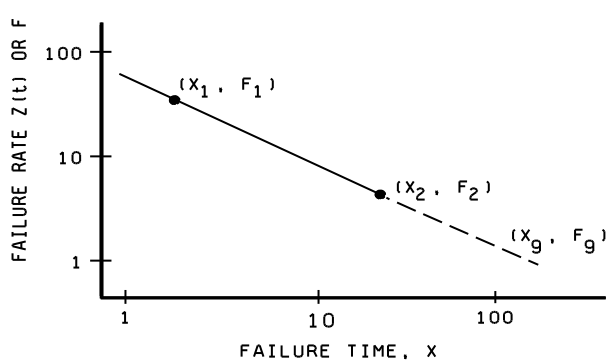

FIGURE 7. Failure rate versus time.

6.6.2 Grading calculations. On the basis of failure counts at x_1 and x_2 as specified in 4.7.25, the slope between these points is calculated as follows:

Equation 4

$$\beta = \frac{\ln\left(\ln\left(\frac{1}{(1-p_2)}\right)\right) - \ln\left(\ln\left(\frac{1}{(1-p_1)}\right)\right)}{\ln x_2 - \ln x_1}$$

The failure rate at time x_2 is then determined from equation 3:

$$F_2 = \frac{-\beta \ln(1-p_2)10^5}{x_2 A}$$

If β is greater than 0.9, the lot should be rejected from the MIL-PRF-39003 program.

If additional grading time is required to reach the desired failure rate, the required time x_g may be determined as follows:

Equation 5

$$\ln x_g = \frac{\ln F_g - \ln F_2}{\beta - 1} + \ln x_2$$

Equation 6

$$A = 7.03412025 * 10^{-9} e^{\left(18.77249321 * \frac{V_a}{V_r}\right)}$$

Where: A = Acceleration factor
e = Natural logarithm base
V_a = Accelerated voltage
V_r = Rated voltage

Examples:

a. 880 capacitors tested at a grading stress level of 1.2300 (75.0139 acceleration factor) for 40 hours resulted in zero failures.

880 (75.0139 x 40) = 2,640,489 hours
C = 0
FR = B level (MIL-STD-690, FRSP-90)

b. 1,350 capacitors tested at a grading stress level of 1.3300 (490.2535 acceleration factor) for 40 hours resulted in zero failures.

1,350 (490.2535 x 40) = 26,473,689 hours
C = 0
FR = C level (MIL-STD-690, FRSP-90)

c. 400 capacitors tested at a grading stress level of 1.4000 (1824.3823) acceleration factor) for 40 hours resulted in 1 failure at x_1; no additional failures at x_2.

400 (1824.3823 x 40) = 29,190,117 hours
C = 1
FR = B level (MIL-STD-690, FRSP-90)

d. 100 capacitors tested at a grading stress level of 1.4000 (1824.3823 acceleration factor) for 41 hours resulted in 3 failures at x_1; no additional failures at x_2.

100 (1824.3823 x 41)	=	7,479,967.430 hours
C	=	3
FR	=	B level (MIL-STD-690, FRSP-90)

Or, assume one additional failure at x_2.

$$\beta = \frac{\ln\left(\ln\left(\frac{1}{(1-p_2)}\right)\right) - \ln\left(\ln\left(\frac{1}{(1-p_1)}\right)\right)}{\ln x_2 - \ln x_1}$$

Where:
x_1 = 2 hours
x_2 = 41 hours
p_1 = .03
p_2 = .04
A = 1824.3823

$$\beta = \frac{\ln\left(\ln\left(\frac{1}{(1-.04)}\right)\right) - \ln\left(\ln\left(\frac{1}{(1-.03)}\right)\right)}{\ln 41 - \ln 2}$$

$$= \frac{\ln(\ln 1.041666) - \ln(\ln 1.030928)}{3.713572 - 0.693147}$$

$$= \frac{-3.1985499 - (-3.4913617)}{3.02042425}$$

$$= \frac{0.2928118}{3.02042425} = 0.096944$$

$$FRL = \frac{-\beta \ln(1-p_2)\, 10^5}{x_2 A} = \frac{-0.096944 \ln(.96)\, 10^5}{41(1824.3823)}$$

$$= \frac{-0.096944(-0.040822)10^5}{74799.67} = 0.000000053 * 10^5$$

$$= \frac{0.0053\%}{1{,}000 hours}$$

To compute hours needed to verify 0.001 percent per 1,000 hours FRL:

$$\ln x_g = \frac{\ln F_g - \ln F_2}{\beta - 1} + \ln x_2$$

Where:
x_2 = hours at point 2
x_g = hours to test (goal)
F_2 = observed FRL at x_2
F_g = Failure rate level (goal)

$$\ln x_g = \frac{\ln(0.001) - \ln(0.0053)}{-0.903056} + \ln 41$$

$$= \frac{-6.9077553 - (-5.2400485)}{-0.903056} + 3.713572$$

$$= \frac{-1.6677068}{-0.903056} + 3.713572$$

$$= 1.8467369 + 3.713572$$

$$= 5.5603089$$

$$x_g = 259.90\ hours$$

6.6.3 Weibull grading method. After determining the lot failure rate in accordance with 4.7.25, the balance of the lot (when applicable) should be tested to the same voltage acceleration conditions as the monitored test samples. These units should then be subjected to the 100-percent electrical test shown in table VIII.

6.7 Subject term (key work) listing.

Hermetically sealed
Nonpolarized
Polarized

6.8 Tin whisker growth. The use of alloys with tin content greater than 97 percent by mass, may exhibit tin whisker growth problems after manufacturer. Tin whiskers may occur anytime from a day to years after manufacture and can develop under typical operating conditions, on products that use such materials. Conformal coatings applied over top of a whisker-prone surface will not prevent the formation of tin whiskers. Alloys of 3 percent lead, by mass, have shown to inhibit the growth of tin whiskers. For additional information of this matter, refer to ASTM-B545 (Standard Specification for Electrodeposited Coatings of Tin).

6.9 Environmentally preferable material. Environmentally preferable materials should be used to the maximum extent possible to meet the requirements of this specification. As of the dating of this document, the U.S. Environmental Protection Agency (EPA) is focusing efforts on reducing 31 priority chemicals. The list of chemicals and additional information is available on their website http://www.epa.gov/osw/hazard/wastemin/priority.htm. Included in the EPA list of 31 priority chemicals are cadmium, lead, and mercury. Use of the materials on the list should be minimized or eliminated unless needed to meet the requirements specified herein (see section 3).

6.10 Changes from previous issue. The margins of this specification are marked with vertical lines to indicate modifications generated by this amendment. This was done as a convenience only and the Government assumes no liability whatsoever for any inaccuracies in these notations. Bidders and contractors are cautioned to evaluate the requirements of this document based on the entire content irrespective of the marginal notations.

APPENDIX A

PROCEDURES FOR QUALIFICATION INSPECTION (EXPONENTIAL DISTRIBUTION)

A.1 SCOPE

A.1.1 Scope. This appendix details the procedures for submission of samples, with related data, for qualification inspection of capacitors covered by this specification. The procedures for extending qualification of the required sample to other capacitors covered by this specification is also outlined herein. This appendix is a mandatory part of the specification. The information contained herein is intended for compliance.

A.2 APPLICABLE DOCUMENTS (Not applicable to this appendix)

A.3 SUBMISSION

A.3.1 Sample. For qualification to "M" FR level in accordance with table V.

A.3.1.1 Single type submission. A sample consisting of 163 sample units (175 sample units for style CSR21) of each case size, dc rated voltage, and capacitance tolerance for which qualification is sought shall be submitted.

A.3.1.2 Combined-voltage group submission. A maximum of two voltage groups shall be represented (see table VI). Except for styles CSR09 and CSR21, a sample consisting of 82 sample units of the highest capacitance value in the size B case of the lowest voltage and 82 sample units of the highest capacitance value in the size B case of the highest voltage in each qualification group (see table A-II) for which qualification is sought; and a sample of 82 units of the highest capacitance value in the lowest voltage and 82 sample units of the highest capacitance value in the highest voltage in each qualification group (see table A-II) for which qualification is sought shall be submitted. For style CSR09 (see 3.1), the sample shall consist of 82 units of the highest capacitance value in the lowest voltage and 82 sample units of the highest capacitance value in the highest voltage in each qualification group. For style CSR21, the combined-voltage group submission shall be the same as for style CSR09, except that the number of sample units to be submitted shall be 88 in each qualification group.

A.3.2 Test data. When tests are to be performed at a Government laboratory, prior to submission, all sample units shall be subjected to all of the group I tests in table V. Each submission shall be accompanied by the test data obtained from these tests. The performance of the destructive tests by the manufacturer on a duplicate set of sample units is encouraged, although not required. All test data shall be submitted in duplicate.

A.3.3 Certification of material. When submitting samples for qualification, the manufacturer shall submit certification, in duplicate, that the materials used in his capacitors are in accordance with the applicable specification requirements.

A.3.4 Description of items. The manufacturer shall submit a detailed description of the capacitors being submitted for inspection, including information on the type of welds or solder buttons; the type of electrodes; the type of seals (inner or outer, as applicable); the case and lead materials; the case insulating material (when applicable); and the case finish.

APPENDIX A

TABLE A-I. Examples of combined-voltage group submissions. 1/

Style	Dash no.	Rated voltage (V_{dc})	Capacitance (μF)	Number of sample units to be submitted
CSR13 (see MIL-PRF-39003/1)	2246	6	56	82
	2289	20	15	82
	2251	6	330	82
	2301	20	100	82
	2304	35	6.8	82
	2368	50	4.7	82
	2312	35	47	82
	2380	50	22	82
	2411	75	3.9	82
	2473	100	2.7	82
	2421	75	15	82
	5167	100	6.8	82
CSR09 (see MIL-PRF-39003/2)	0002	6	18	82
	0024	20	6.8	82
	0029	35	2.7	82
	0033	50	1.8	82
	0051	75	1.2	163
CSR23 (see MIL-PRF-39003/3)	0104	6	100	82
	0153	20	27	82
	0114	6	1,000	82
	0163	20	180	82
	0166	35	10	82
	0180	50	6.8	82
	0174	35	68	82
	0187	50	39	82
CSR33 (see MIL-PRF-39003/6)	0004	6	100	82
	0014	6	1,000	82
	0053	20	27	82
	0063	20	180	82
	0066	35	10	82
	0074	35	68	82
	0080	50	6.8	82
	0087	50	39	82
CSR21 (see MIL-PRF-39003/9)	0008	6	330	88
	0050	20	100	88
	0063	35	47	88
	0083	50	22	88

1/ This table is set up as a guide. For other combinations, refer to the text of this appendix.

APPENDIX A

A.4 EXTENT OF QUALIFICATION

A.4.1 Single type submission. Capacitance range qualification will be restricted to values equal to or less than the capacitance value submitted. Voltage range approval will be restricted to the voltages equal to or less than that submitted in the same voltage group (see table VI). Case size approval will be restricted to that submitted, except that approval of case size B or B1 may be a basis for approval of case size A or A1, respectively, and approval of case size D may be a basis for approval of case size C. Qualification of 20-percent capacitance tolerance will be restricted to 20-percent tolerance; qualification of 10-percent tolerance will be the basis for granting qualification for the 20, 10, and 5-percent capacitance tolerance.

A.4.2 Combined-voltage group submission. Qualification of the types submitted will be a basis for qualification of all intermediate voltages in the qualification group (see table A-II). Capacitance range, case size, and capacitance tolerance qualification shall be as specified in A.4.1. Examples of combined-voltage group submissions are listed in table A-I.

A.4.3 Nonpolarized coverage for polarized submission. Qualification of polarized style CSR13 will be the basis for approval of nonpolarized style CSR91. Qualification will be restricted to the approval granted under A.4.1 and A.4.2, and will be granted only to manufacturers qualified to style CSR13 capacitors.

TABLE A-II. Examples of qualification group. 1/

Style	Qualification group	Case size	DC rated voltage (V_{dc})
CSR13 (see MIL-PRF-39003/1)	I	A and B	6, 10, 15, and 20
	II	C and D	6, 10, 15, and 20
	III	A and B	35 and 50
	IV	C and D	35 and 50
	V	A and B	75 and 100
	VI	C and D	75
		C	100
CSR09 (see MIL-PRF-39003/2)	I	A1 and B1	6, 10, 15, and 20
	III	A1 and B1	35 and 50
	V	A1 and B1	75
CSR23 (see MIL-PRF-39003/3)	I	A and B	6, 10, 15, and 20
	II	C and D	6, 10, 15, and 20
	III	A and B	35 and 50
	IV	C and D	35 and 50
CSR21 (see MIL-PRF-39003/9)	II	C and D	6, 10, 15, and 20
	IV	C and D	35 and 50
CSR33 (see MIL-PRF-39003/6)	I	A and B	6, 10, 15, and 20
	II	C and D	6, 10, 15, and 20
	III	A and B	35 and 50
	IV	C and D	35 and 50

1/ This table is set up as a guide. For other combinations, refer to the text of the appendix.

A.5 QUALIFICATION APPROVAL FOR LOWER FR LEVELS

A.5.1 Extension of qualification. Extension of qualification to lower FR levels shall be in accordance with 4.4.4.1.1 of this specification.

APPENDIX B

PROCEDURES FOR QUALIFICATION INSPECTION (WEIBULL DISTRIBUTION)

B.1 SCOPE

B.1.1 Scope. This appendix details the procedures for extending qualification from exponential FRL qualification to Weibull FRL qualification. Extension of qualification to include CSS styles (high reliability) is also outlined herein. This appendix is a mandatory part of the specification. The information contained herein is intended for compliance.

B.2 APPLICABLE DOCUMENT (Not applicable to this appendix.)

B.3 EXTENT OF QUALIFICATION

B.3.1 Weibull FR level qualification. Weibull failure rate qualification will be extended only to manufacturers who have achieved the "P" level failure rate for any capacitor style covered by this specification in accordance with 4.4.4.1.1, or by Weibull Failure Rate Determination (FRL) method in MIL-PRF-55365. To extend qualification to include Weibull failure rate level, the manufacturer shall certify and demonstrate the capability of Weibull FR level grading (see 4.7.25) to the qualifying activity. Full range qualification shall be in accordance with table B-I..

B.3.2 CSS style qualification. A manufacturer shall be considered qualified for CSS style capacitors if they qualify to the B or C, as applicable, or better Weibull FRL (see table 3.3) for the equivalent CSR style capacitors.

TABLE B-I. Matrix for Weibull qualification testing by rated voltage (dc), capacitance (μF), and case size. 1/

Style	6 V	10 V	15 V	20 V	35 V	50 V	75 V	100 V	Case size
CSR13 2/	6.8	4.7	3.3	2.2	N/A	1.0	.68 3/	.56 3/	A
	56	39	22	15	6.8	3.9 3/ 4.7	2.7 3/ 3.9	2.7 4/	B
	180	120	68	47 3/	22	18.0	10	6.8 3/	C
	330	220	150	100	47 3/	22	15 3/	N/A	D
CSR09	2.7	2.2	1.5	1.0	.47 3/	.27	.18 3/	N/A	A1
	18	15	8.2	6.8	2.7	1.8 3/	1.2 3/	N/A	B1
CSR33 5/	12	8.2	5.6	3.9	1.8	1.5 3/	N/A	N/A	A
	100	82	39 3/	27	10	6.8 3/	N/A	N/A	B
	470	270	180	68 3/ 120	47	27 4/	N/A	N/A	C
	1,000	560	330	180	68	39 3/	N/A	N/A	D
CSR21	180	120	68	47 3/	22	18 3/	N/A	N/A	C
	330	220	150	100 3/	47	22 3/	N/A	N/A	D

1/ All capacitance tolerance shall be ± 10 percent.
2/ Qualification to style CSR13 will qualify style CSR91.
3/ The voltage and capacitance levels shown for this case size must be tested to obtain full range qualification at the B, C, or D failure rate levels.
4/ An exception is made for the C or D failure rate levels of the CSR13 B case 100 V or CSR33 C case 50 V; a 2.2 μF CSR13 and a 22 μF CSR33 shall be tested, respectively.
5/ Qualification to style CSR33 will qualify style CSR23.

APPENDIX C

SOLDER DIP (RETINNING) LEADS

C.1 SCOPE

C.1.1 Scope. This appendix details the procedures for solder dip (retinning) process to the leads of capacitors supplied to this specification. This appendix is a mandatory part of the specification. The information contained herein is intended for compliance.

C.2 SOLDER DIP (RETINNING) LEADS

C.2.1 Solder dip (retinning). The capacitor manufacturer or their approved category B distributor may solder dip/retin the leads of the capacitors supplied to this specification. The distributor's hot solder dip/retinning process shall be the same as the manufacturer's process, which shall be approved by the qualifying activity.

C.2.2 Qualifying activity approval. Approval of the solder dip process shall be based on one of the following options:

a. When the original lead finish qualified was hot solder dip lead finish 52 in accordance with MIL-STD-1276, the manufacturer shall use the same solder dip process for retinning as is used in the original manufacture of the product or one authorized by the manufacturer with approval based on the method outlined in C.2.2b.

(NOTE: The 200 microinch maximum thickness is not applicable).

b. When the lead originally qualified was not solder dip lead finish 52 of MIL-STD-1276 as prescribed in C.2.2a, approval for the process to be used for solder dip shall be based on the following procedure:

(1) Thirty samples of any capacitance value for each style and lead finish shall be subjected to the manufacturer's solder dip process. The capacitors shall be subjected to all group A, subgroup 1 post-electrical tests, with no defects allowed. (NOTE: If radiographic inspection and hermetic seal testing are required in group A, these tests shall also be performed, with no defects allowed.)

(2) Ten of the 30 samples shall then be subjected to the solderability test, with no defects allowed.

(3) The remaining 20 samples shall be subjected to the resistance to soldering heat test, followed by the moisture resistance test (or hermetic seal test if the device is hermetically sealed), with no defects allowed.

C.2.3 Solder dip/retinning options. The capacitor manufacturer may solder dip/retin after the 100 percent group A screening tests or as a corrective action. After solder dip/retinning, the following inspection and tests shall be performed on 100 percent of the lot:

a. Seal: Shall conform to the requirements of 3.9 (polarized capacitors only, see 3.1).

b. Radiographic inspection: Shall conform to the requirements of 3.10 (polarized capacitors only, see 3.1) (all FR levels apply).

c. DC leakage: Shall not exceed the requirement specified in 3.11.

d. Capacitance: Shall be within the tolerance specified (see 3.12).

e. Dissipation factor: Shall not exceed the requirement specified in 3.13.

f. Equivalent series resistance (styles CSR21 and CSS21 only): Shall not exceed the requirement specified in 3.14.

Failed parts shall not be delivered on the contract or purchase order.

Custodians:
Army – CR
Navy - EC
Air Force – 85
DLA - CC

Review activities:
Navy - AS, MC, OS, SH
Air Force - 19, 99
Other - MDA

Preparing activity:
DLA - CC

(Project 5910-2015-004)

NOTE: The activities listed above were interested in this document as of the date of this document. Since organizations and responsibilities can change, you should verify the currency of the information above using ASSIST Online database at https://assist.dla.mil.