DEFENSE LOGISTICS AGENCY
LAND AND MARITIME
P.O. BOX 3990
COLUMBUS, OHIO 43218-3990

November 15, 2016

MEMORANDUM FOR MILITARY/INDUSTRY DISTRIBUTION

SUBJECT: Initial Drafts of:

MIL-PRF-32535/9 w/AMENDMENT 1 (Capacitor, Chip, Fixed, Ceramic Dielectric (General Purpose), Extended Range, High Reliability and Standard Reliability, Size 0306)
MIL-PRF-32535/10 w/AMENDMENT 2 (Capacitor, Chip, Fixed, Ceramic Dielectric (General Purpose), Extended Range, High Reliability and Standard Reliability, Size 0508)

Project numbers: 5910-2017-001 and -002.

The subject documents are now available for viewing and downloading from the DLA Land and Maritime - VA website:

https://landandmaritimeapps.dla.mil/Programs/MilSpec/initialdrafts.aspx

These documents are being amended to add new capacitance values at the request of a manufacturer seeking qualification. An effort has been made to highlight changes from prior revisions; however, reviewers are cautioned to review the entire document.

Concurrence or comments are required at this Center no later than 16 December 2016. If comments are not received during the allotted coordination period, concurrence may be assumed. Late comments may be held for the next specification action. Comments from military departments must be identified as either “Essential” or “Suggested”. Essential comments must be justified with supporting data. Military review activities should forward comments to their custodians of this office, as applicable, in sufficient time to allow for consolidating the department reply. Since Navy – EC is a custodian for this document; all Navy review activities should forward their comments directly to this Center.

The point of contact for this project is Mr. John Bonitatibus, DLA Land and Maritime - VAT, Post Office Box 3990, Columbus, OH 43218-3990. The preferred method of contact is via email. John can be reached at john.bonitatibus@dla.mil or 614-692-4709/DSN 850-4709.

//Signed//

Michael A. Radecki
Chief
Electronic Components Branch

NOTE: This draft, dated 15 November 2016, prepared by DLA-CC, has not been approved and is subject to modification.

DO NOT USE PRIOR TO APPROVAL. (Project 5910-2017-001)

INCH-POUND
MIL-PRF-32535/9
w/AMENDMENT 1
DRAFT
SUPERSEDING
MIL-PRF-32535/9
28 September 2015

PERFORMANCE SPECIFICATION SHEET

CAPACITOR, CHIP, FIXED, CERAMIC DIELECTRIC (GENERAL PURPOSE), EXTENDED RANGE, HIGH RELIABILITY AND STANDARD RELIABILITY, SIZE 0306

This specification sheet is approved for use by all Departments and Agencies of the Department of Defense.

The requirements for acquiring the product described herein shall consist of this specification sheet and MIL-PRF-32535.

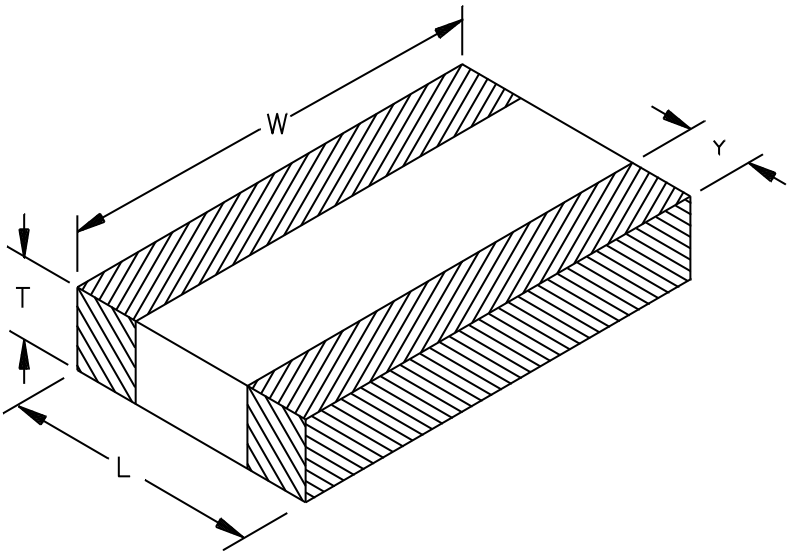

Dimensions			
L ± .006	W ± .006	T Max.	Y Min.
.032	.063	.024	.005

inches	mm
.005	0.13
.006	0.15
.024	0.61
.032	0.81
.063	1.60

NOTES:
1. Dimensions are in inches.
2. Metric equivalents are given for information only.
3. Dimensions and tolerances are for terminated chips.

FIGURE 1. Size 0306 capacitors.

REQUIREMENTS:

Dimensions and configuration: See figure 1.

Capacitance value: See table I.

Capacitance tolerance: See table I.

Voltage-temperature limit or temperature characteristic: E2 = X7R and E3 = X7S as specified in MIL-PRF-32535.

Rated voltage (V_{dc}): V = 4; W = 6.3; X = 10; Y = 16; Z = 25. See table I for maximum rated voltage available for each capacitance value.

Operating temperature range: -55°C to +125°C.

Termination finish: G, M, R, V, and Z as specified in MIL-PRF-32535.

Electrode: P and B as specified in MIL-PRF-32535.

Product level designator: Standard reliability – M and high reliability - T.

Marking: Package marking only in accordance with MIL-PRF-32535.

TABLE I. Size 0306 capacitor characteristics.

Part or Identifying Number (PIN) 1/	Capacitance (pF)	Capacitance tolerance	VTL/TC	Rated voltage 2/ (V_{dc})	Electrode material
M3253509E2 - 102 - - - -	1,000	K, M	X7R	25	P, B
M3253509E2 - 222 - - - -	2,200	K, M	X7R	25	P, B
M3253509E2 - 472 - - - -	4,700	K, M	X7R	25	P, B
M3253509E2 - 103 - - - -	10,000	K, M	X7R	25	P, B
M3253509E2 - 153 - - - -	15,000	K, M	X7R	25	P, B
M3253509E2 - 223 - - - -	22,000	K, M	X7R	25	P, B
M3253509E2 - 473 - - - -	47,000	K, M	X7R	25	P, B
M3253509E2 - 683 - - - -	68,000	K, M	X7R	25	P, B
M3253509E2 - 104 - - - -	100,000	K, M	X7R	16	P, B
M3253509E3V224 - - - -	220,000	K, M	X7S	4	P, B
M3253509E3V334 - - - -	330,000	K, M	X7S	4	P, B
M3253509E3V474 - - - -	470,000	K, M	X7S	4	P, B
M3253509E3V105 - - - -	1,000,000	K, M	X7S	4	P, B

1/ The complete PIN shall include additional symbols to indicate voltage (where applicable), capacitance tolerance, termination finish, product level, and electrode material.
2/ This is the maximum rated voltage available. All lower voltage ratings are also available.

Amendment notations. The margins of this specification are marked with vertical lines to indicate modifications generated by this amendment. This was done as a convenience only and the Government assumes no liability whatsoever for any inaccuracies in these notations. Bidders and contractors are cautioned to evaluate the requirements of this document based on the entire content irrespective of the marginal notations.

Custodians:
Army – CR
Navy - EC
Air Force – 85
DLA - CC

Preparing activity:
DLA - CC

(Project 5910-2017-001)

Review activities:
Army - MI
Navy - AS, MC, OS, SH
Air Force - 19, 99
Other – MDA, NA

NOTE: The activities listed above were interested in this document as of the date of this document. Since organizations and responsibilities can change, you should verify the currency of the information above using the ASSIST Online database at https://assist.dla.mil.