INCH-POUND

MIL-PRF-31031/12A
w/AMENDMENT 2
26 April 2016
SUPERSEDING
MIL-PRF-31031/12A
w/AMENDMENT 1
21 September 2006

PERFORMANCE SPECIFICATION SHEET

CONNECTOR, RECEPTACLE, ELECTRICAL, RADIO FREQUENCY, SERIES BMA, JAMNUT MOUNT, FOR SEMIRIGID CABLE, PIN CONTACT, HIGH RELIABILITY

This specification is approved for use by all Departments and Agencies of the Department of Defense.

The requirements for acquiring the product described herein shall consist of this specification sheet and MIL-PRF-31031.

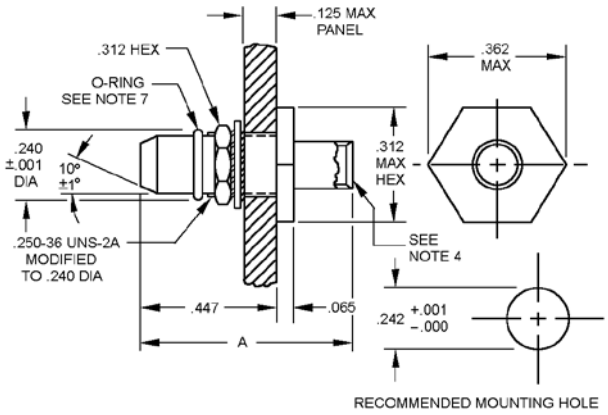

Inches	mm	Inches	mm
.000	0.00	.242	6.15
.001	0.03	.250	6.35
.065	1.65	.312	7.92
.125	3.18	.362	9.19
.240	6.10	.447	11.35

NOTES:
1. Dimensions are in inches.
2. Metric equivalents are given for information only.
3. Unless otherwise specified, all tolerances are ± 005 inch (0.13 mm).
4. See table I for cable accommodation.
5. For dimension A see table I.
6. Dimension A defines the overall length of the connector when assembled to the cable.
7. “O” rings are flourosilicone in accordance with SAE-AMS-R-25988, class I, type I.

FIGURE 1. General configuration.

TABLE I. Part or Identifying Number (PIN) cross-reference and dimensions. 1/

PIN 2/ M31031/12	Applicable cable and group 3/ M17/	Dimensions	Inches (millimeters) maximum
Category E - field serviceable (no special tools required) 4/			
E**01	130-RG402 Group XVI	A	.710 (18.03 mm)
E**02	133-RG405 Group XVII	A	.710 (18.03 mm)

1/ The cables are to be used when performing tests. However, all the cables in the specification sheet must accommodate the connectors.

2/ These connectors have captivated center contacts.

3/ The latest version of the cable is applicable.

4/ Kit number - Omni Spectra T-200. Amphenol 901-2500 or equivalent.

TABLE II. Cable retention force.

Cable	Pounds minimum	Torque minimum
MIL-DTL-17/130 Group XVI	60	55
MIL-DTL-17/133 Group XVII	30	16

1/ Torque to be applied 4 inches maximum from the end of the connector reverse bend not applicable.

TABLE III. Group qualification. 1/ 2/ 3/ 4/

Group	Submission and qualification of any of the following connectors	Qualified the following connectors
I	M31031/12E**02	M31031/12E**01 M31031/12E**02

* Options as defined in the PIN construction.
1/ Individual connectors other than those listed are self-qualifying.
2/ Qualification of connectors qualifies connectors of the same body materials only.
3/ Qualification of connectors qualifies connectors of the same environmental construction only.
4/ Changes in plating (body or center contact) shall require the corrosion and contact resistance tests be performed.

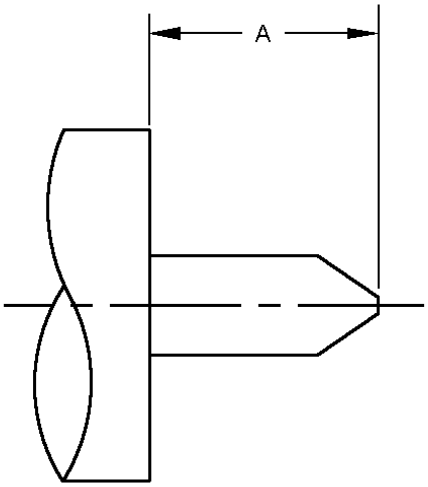

STRIPPING DIMENSIONS

Stripping dimensions

Cable	Dimensions A	
	Minimum	Maximum
M17/130-RG402 Group XVI	.080 (2.03 mm)	.090 (2.29 mm)
M17/133-RG405 Group XVII	.065 (1.65 mm)	.075 (1.91 mm)

NOTES:
1. Dimensions are in inches.
2. Metric equivalents are given for information only.
3. Tapering of the center conductor is required see manufacturers instructions.
4. All undimensioned pictorial configurations are for reference purposes only.

FIGURE 2. Cable stripping dimensions.

ENGINEERING DATA:

Nominal impedance: 50 ohms.

Frequency range: 0 to 18 GHz (frequency limit is dependent on cable used).

Voltage rating:

MIL-DTL-17/130 and group XVI: 500 V rms at sea level; 125 V rms at 70.000 feet.
MIL-DTL-17/133 and group XVII: 335 V rms at sea level; 85 V rms at 70.000 feet.

Temperature rating: -65°C to +125°C.

REQUIREMENTS: The following tests assure connector integrity within the typical operating conditions and application. Alternate methods shall be made known to the qualifying authority prior to performance of the test. The test methods described in the general specification and herein are proven methods and shall be the referee method in cases of dispute.

Dimensions and configuration: See figure 1 and MIL-STD-348.

Force to engage and disengage:

Longitudinal force: Not applicable.

Torque: Not applicable.

Radial misalignment: Not applicable.

Axial misalignment: Not applicable.

Coupling proof torque: Not applicable.

Mating characteristics:

Reference MIL-STD-348 for dimensions.

Hermetic seal: Not applicable.

Permeability: Applicable.

Leakage (pressurized connectors): Not applicable.

Insulation resistance: In accordance with test procedure EIA-364-21 5,000 megohms minimum.

Center contact retention: 6 pounds minimum axial force.

Radial torque: Not applicable.

Corrosion (salt spray): In accordance with test procedure EIA-364-26 test condition B.

Voltage standing wave ratio (VSWR): From 500 to 18 GHz, or approximately 80 percent of upper cutoff frequency of the cable, whichever is lower:

MIL-DTL-17/130 and group XVI: 1.02 +.005 F (6 Hz).
MIL-DTL-17/133 and group XVII: 1.05 +.005 F (6 Hz).

Connector durability: 500 cycles minimum, at 12 cycles per minute, maximum. The connector shall meet the mating characteristics and force to engage and disengage requirements.

Contact resistance: In milliohms maximum:

	Initial	After environment
Center contact	3.0	4.0
Outer contact	2.0	Not applicable
Braid to body	0.5	Not applicable

Dielectric withstanding voltage: In accordance with test procedure EIA-364-20 condition I.

MIL-DTL-17/130 and group XVI: 1.500 volts rms at 60 Hz at sea level.
MIL-DTL-17/133 and group XVII: 1.000 volts rms at 60 Hz at sea level.

Vibration, high frequency: In accordance with test procedure EIA-364-28 condition III. No discontinuity permitted. This test needs to be performed only during initial qualification, so long as the qualifying design does not change.

Shock: In accordance with test procedure EIA-364-27 condition F. No discontinuity permitted. This test needs to be performed only during initial qualification, so long as the qualifying design does not change.

Temperature cycling: In accordance with test procedure EIA-364-32 condition I, 5 cycles. except test high temperature shall be +125°C. Low-test temperature shall be -65°C.

Moisture resistance: In accordance with test procedure EIA-364-31 condition B no measurements at high humidity. Insulation resistance shall be at least 200 megohms within 5 minutes after removal from humidity.

Corona level (at 70.000 feet): This test needs to be performed only during initial qualification, so long as the qualifying design does not change.

MIL-DTL.17/130 and group XVI: 375 volts rims minimum.
MIL-DTL-17/133 and group XVII: 250 volts rims minimum.

RF high potential withstanding voltage: This test needs to be performed only during initial qualification, so long as the qualifying design does not change.

Voltage and frequency (at a frequency from 5 to 7.5 MHz):

Leakage current: Not applicable.

MIL-DTL-17/130 and group XVI: 1.000 volts rms minimum.
MIL-DTL-17/133 and group XVII: 670 volts rms minimum.

Cable retention force: See table II.

Coupling mechanism retention force: Not applicable.

Shielding effectiveness: In accordance with test procedure EIA-364-66, -85 dB minimum. This test needs to be performed only during initial qualification, so long as the qualifying design does not change.

RF transmission loss (dB maximum): This test needs to be performed only during initial qualification, so long as the qualifying design does not change. $.03\sqrt{\text{frequency GHz}}$ Test at a frequency between 9 and 12.4 Ghz.

Porosity: Applicable.

Safety wire hole pullout: Not applicable.

Thermal vacuum outgassing: Applicable to space grade connectors only.

Flammability: Applicable to space grade connectors only.

Odor: Applicable to space grade connectors only.

Toxicity (offgassing): Applicable to space grade connectors only.

Safety wire hole pullout: Not applicable.

PIN: M31031/12 (see table I).

Group qualification: See table III.

NOTES:

1. If a connector manufacturer produces a connector that meets all the requirements for two or more connector PIN's (within the same series and of the same environmental grade). The manufacturer may receive qualification approval for two or more connector PIN's qualifying the one connector. It is not necessary that such connectors be in the same group. Each connector, however, must be marked with its own PIN. For group qualification, the connectors must be of similar design.

2. For qualification retention, where more than one part is listed in a group in this column. Data may be supplied on any of those parts in order to retain qualification for those parts in the corresponding right hand column. The part does not necessarily have to be the part initially qualified.

Supersession: This specification supersedes DSCC drawing 85072 when a QPL source becomes available.

In addition to MIL-PRF-31031, this specification sheet references the following documents:

MIL-DTL-17/130
MIL-DTL-17/133
MIL-STD-348
EIA-364-021
EIA-364-020
EIA-364-026
EIA-364-027
EIA-364-028
EIA-364-031
EIA-364-032
EIA-364-066
SAE-AMS-R-25988

The margins of this specification are marked with vertical lines to indicate modifications generated by this amendment. This was done as a convenience only and the Government assumes no liability whatsoever for any inaccuracies in these notations. Bidders and contractors are cautioned to evaluate the requirements of this document based on the entire content irrespective of the marginal notations.

CONCLUDING MATERIAL

Custodians:
Army - CR
Navy - EC
Air Force - 85
DLA - CC
NASA - NA

Review activities:
Amy - AT, AV, EA, MI
Navy - AS, MC, OS, SH
Air Force - 19, 99

Preparing activity:
DLA - CC

(Project 5935-2016-069)

NOTE: The activities listed above were interested in this document as of the date of this document. Since organizations and responsibilities can change, you should verify the currency of the information above using the ASSIST Online database at http://assist.dla.mil.