INCH-POUND

MIL-PRF-31031C
10 November 2014
SUPERSEDING
MIL-PRF-31031B
18 August 2005

PERFORMANCE SPECIFICATION

CONNECTORS, ELECTRICAL, PLUGS AND RECEPTACLES, COAXIAL, RADIO FREQUENCY, HIGH RELIABILITY, FOR FLEXIBLE AND SEMIRIGID CABLES, GENERAL SPECIFICATION FOR

This specification is approved for use by all Departments
and Agencies of the Department of Defense.

1. SCOPE

1.1 Scope. This specification covers the general requirements and tests for radio frequency connectors used with flexible RF cables and certain other types of coaxial transmission lines.

1.1.2 Part or Identifying Number (PIN). The PIN consists of the letter "M" followed by the basic specification sheet number. The remainder of the PIN is constructed in the following manner:

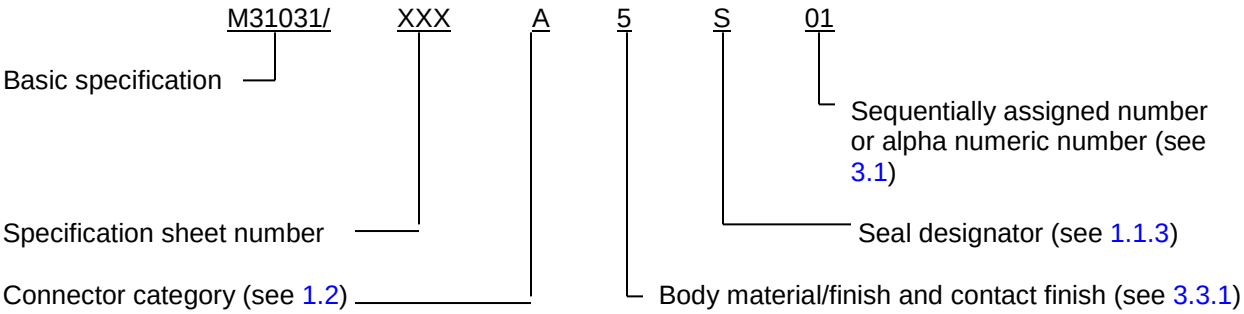

NOTE: Once the PIN is constructed by the user, the specification should be checked for compliance and the Qualified Products List (QPL) is to be checked for sources prior to procurement.

Comments, suggestions, or questions on this document should be addressed to DLA Land and Maritime, Attn: VAI, P.O. Box 3990, Columbus, OH 43218-3990, or emailed to RFConnector@dla.mil. Since contact information can change, you may want to verify the currency of this address information using the ASSIST Online database at https://assist.dla.mil.

AMSC N/A FSC 5935

1.1.3 Environmental seal. The connector is designated as sealed or unsealed in the following manner. See space grade packaging requirements for space grade connectors (see section 5.1).

N – Unsealed.
B – Unsealed, space grade.
S – Sealed.
G – Sealed, space grade.
Y – Hermetic.
H – Hermetic, space grade.

1.2 Categories. The categories of connectors are designated by an A (field serviceable), B (non-field replaceable, special tools may be required), C (field replaceable, solder center contact), D (field replaceable, crimp center contact), E (field replaceable), F (field replaceable), M (field replaceable) and N adapters (field replaceable) as follows:

a. Category A – Connectors which do not require special tools to assemble are designated as category A connectors. Standard wrenches, soldering equipment, pliers, etc., are not defined as special tools. Intended for use on flexible cables only.

b. Category B – Connectors which require special tools to assemble are designated category B connectors. These connectors are for original equipment manufacturers use only. A qualified source for the replacement connector in another category must be in existence before connectors from this category can be used by the OEM. Loss of the qualified source for the replacement connector will force the removal of the associated category B part from the QPL as well. Category B connectors will not be stocked or procured by the Government.

c. Category C – Connectors which require only standard military crimping tools for braid attachment and standard cable stripping dimensions to assemble are designated as category C connectors. The standard military crimping tool is as specified in 3.1. Center contacts are assembled by solder. (Intended for use on flexible cables only).

d. Category D – Connectors which require only standard military crimp tools for the center contact and outer ferrule, and standard cable stripping dimensions to assemble are designated as category D connectors. The standard military crimp tools are as specified in 3.1. Intended for use on flexible cables only.

e. Category E – Connectors using semirigid cables with standard stripping dimensions and using standard soldering tools.

f. Category F – Connectors using semirigid cables with standard stripping dimensions and using standard military tools. The method of assembly of the connector to the cable is crimping for at least the outer conductor. Center contacts may be soldered.

g. Category M – Connectors using semirigid cables with standard stripping dimensions using standard military tools. The method of assembly is mechanical and does not require the use of crimping tools or soldering irons.

h. Category N – Connectors, no cable attachment, such as shrouds and hardware. No special tools required.

i. Category P – Adapters, Connectors, no cable attachment. No special tools required. Removal tool to be specified by the manufacturer if required.

2. APPLICABLE DOCUMENTS

2.1 General. The documents listed in this section are specified in sections 3 and 4 of this specification. This section does not include documents cited in other sections of this specification or recommended for additional information or as examples. While every effort has been made to ensure the completeness of this list, document users are cautioned that they must meet all specified requirements cited in sections 3 and 4 of this specification, whether or not they are listed.

2.2 Government documents.

2.2.1 Specifications, standards, and handbooks. The following specifications, standards, and handbooks form a part of this document to the extent specified herein. Unless otherwise specified, the issues of these documents are those cited in the solicitation or contract.

FEDERAL STANDARDS

FED-STD-H28 - Screw Thread Standards for Federal Services.

DEPARTMENT OF DEFENSE SPECIFICATIONS

MIL-DTL-45204 - Gold Plating, Electrodeposited.
MIL-DTL-38999 - Connectors, Electrical, Circular, Miniature, High Density, Quick Disconnect (Bayonet, Threaded, And Breech Coupling), Environment Resistant, Removable Crimp And Hermetic, Solder Contacts, General Specification For
MIL-PRF-39012 - Connectors, Coaxial, Radio Frequency, General Specification For

(See ASSIST database for list of specification sheets.)

DEPARTMENT OF DEFENSE STANDARDS

MIL-STD-130 - Identification Marking of U.S. Military Property.
MIL-STD-202 - Test Methods for Electronic and Electrical Component Parts.
MIL-STD-348 - Radio Frequency Connector Interfaces.
MIL-STD-790 - Standard Practice for Established Reliability and High Reliability Qualified Products List (QPL) Systems For Electrical, Electronic, and Fiber Optic Parts.
MIL-STD-889 - Dissimilar Metals.
MIL-STD-1285 - Marking of Electrical and Electronic Parts.

(Copies of these documents are available online at http://quicksearch.dla.mil/.)

2.2.2 Other Government documents, drawings, and publications. The following other Government documents, drawings, and publications form a part of this document to the extent specified herein. Unless otherwise specified, the issues of these documents are those cited in the solicitation or contract.

NATIONAL AERONAUTICS AND SPACE ADMINISTRATION

NHB 8060.1 - Flammability, Odor, Offgassing and Compatibility Requirements and Test Procedures for Materials in Environments that Support Combustion.

(Copies of these documents are available from http://www.hq.nasa.gov.)

2.3 Non-Government publications. The following documents form a part of this document to the extent specified herein. Unless otherwise specified, the issues of these documents are those cited in the solicitation or contract.

AEROSPACE INDUSTRIES ASSOCIATION OF AMERICA, INC. (AIA/NAS)

NASM20995	- Wire, Safety, or Lock.

(Copies of these documents are available online from http://www.aia-aerospace.org.)

ASME INTERNATIONAL

ASME B46.1	- Surface Texture, (Surface Roughness, Waviness and Lay.)

(Copies of these documents are available online at http://www.asme.org.)

ASTM INTERNATIONAL

ASTM A342/A342M	- Materials, Feebly Magnetic, Permeability of, Standard Test Methods For.
ASTM A484/A484M	- Steel, Bars, Billets and Forgings, Stainless.
ASTM B36/B36M	- Plate, Brass, Sheet, Strip, and Rolled Bar.
ASTM B88	- Tube, Water, Seamless Copper.
ASTM B121/B121M	- Plate, Leaded Brass, Sheet, Strip, and Rolled Bar.
ASTM B139/B139M	- Rod, Phosphor Bronze, Bar, and Shapes.
ASTM B194	- Copper-Beryllium Alloy Plate, Sheet, Strip, and Rolled Bar.
ASTM B196/B196M	- Rod and Bar, Copper-Beryllium Alloy.
ASTM B197/B197M	- Wire, Alloy Copper-Beryllium.
ASTM B700	- Standard Specificaton For Electrodeposited Coatings of Silver for Engineering Uses
ASTM D2116	- Molding and Extrusion Materials, FEP Fluorocarbon.
ASTM D4894	- Polytetrafluoroethylene (PTFE) Granular Molding and RAM Extrusion Materials.
ASTM D4895	- Polytetrafluoroethylene (PTFE) Resins Produced From Dispersion.
ASTM E595	- Total Mass Loss and Collected Volatile Condensable Materials from Outgassing in a Vacuum Environment.

(Copies of these documents are available from http://www.astm.org.)

ELECTRONIC COMPONENTS INDUSTRY ASSOCIATION (ECIA)

EIA/ECA-364	- Electrical Connector/Socket Test Procedures Including Environmental Classifications.
EIA/ECA-364-20	- Withstanding Voltage Test Procedure for Electrical Connectors, Sockets and Coaxial Contacts.
EIA/ECA-364-26	- Salt Spray Test Procedure for Electrical Connectors, Sockets and Coaxial Contacts.
EIA/ECA-364-27	- Mechanical Shock (Specified Pulse) Test Procedure for Electrical Connectors.
EIA/ECA-364-28	- Vibration Test Procedure for Electrical Connectors and Sockets.
EIA/ECA-364-31	- Humidity Test Procedure for Electrical Connectors and Sockets.
EIA/ECA-364-32	- Thermal Shock (Temperature Cycling) Test Procedure for Electrical Connectors and Sockets.
EIA/ECA-364-66	- EMI Shielding Effectiveness Test Procedure for Electrical Connectors.

(Copies of these documents are available online at http://eciaonline.org.)

IEEE OPERATIONS CENTER

IEEE Standard 287 - Standard for Precision Coaxial Connectors.

(Copies of these documents are available online from http://www.corporate-communications@ieee.org.)

INSTITUTE FOR INTERCONNECTING AND PACKAGING ELECTRONIC CIRCUITS

J-STD-006 - Electronic Grade Solder Alloys and Fluxed and Non-Fluxed Solid Solders For Electronic Soldering Applications, Requirements For

(Copies of these documents are available online from http://www.ipc.org.)

SAE INTERNATIONAL

SAE-AMS-2700 - Passivation of Corrosion Resistant Steels.

(Copies of these documents are available online from http://www.sae.org.)

2.4 Order of precedence. Unless otherwise noted herein or in the contract, in the event of a conflict between the text of this document and the references cited herein (except for related specification sheets), the text of this document takes precedence. Nothing in this document, however, supersedes applicable laws and regulations unless a specific exemption has been obtained.

3. REQUIREMENTS

3.1 Specification sheets. The individual item requirements shall be as specified herein and in accordance with the applicable specification sheet. In the event of any conflict between the requirements of this specification and the specification sheet, the latter shall govern.

3.2 Qualification. Connectors furnished under this specification shall be products that are authorized by the qualifying activity for listing on the applicable qualified products list before contract award (see 4.3.1 and 6.3).

3.2.1 QPL system. The manufacturer shall establish and maintain a QPL system for parts covered by this specification. Requirements for this system are specified in MIL-STD-790. In addition, the manufacturer shall establish a Statistical Process Control (SPC) system that meets the requirements of 3.2.2.

3.2.2 SPC system. As part of the overall MIL-STD-790 QPL system, the manufacturer shall establish a SPC system.

3.3 Critical interface, materials plating and processes. Material shall be as specified herein. If materials other than those specified are used, the contractor shall certify to the qualifying activity that the substitute material enables the connectors to meet the requirements of this specification. Acceptance or approval of any constituent material shall not be construed as a guaranty of the acceptance of the finished product. When a definite material is not specified, a material shall be used which will enable the connector to meet the requirements of this specification.

Specified materials: See ASTM A342/A342M, ASTM A484/A484M, ASTM B36/B36M, ASTM B88, ASTM B121/B121M, ASTM B139/B139M, ASTM B194, ASTM B196/B196M, ASTM B197/B197M, ASTM B700, ASTM D2116, ASTM D4894, ASTM D4895, and ASTM E595.

3.3.1 Critical interface connector body material/finish and center contact finish. The connector body material/finish and center contact finish shall be one of the following:

0 - Brass body, silver finish. All brass-bodied connectors are silver plated to a minimum thickness of 5.08 µm (.0002 inch) in accordance with ASTM B700, over a copper underplate. The male pin shall be plated to a minimum gold thickness of 50 micro inches (1.27 µm) in accordance with MIL-DTL-45204, type II, grade C, class 1 (or equivalent as permitted by the qualification and preparing activities), 50 micro inches (1.27 µm) minimum of nickel in accordance with MIL-DTL-38999, appendix A, type 2, measured anywhere along the mating surface, for all series. The socket contact shall be plated to a minimum gold thickness of 50 micro inches (1.27 µm) in accordance with MIL-DTL-45204, type II, grade C, class 1 (or equivalent as permitted by the qualification and preparing activities), over 50 micro inches (1.27 µm) minimum of nickel in accordance with MIL-DTL-38999, appendix A, type 2, including the I.D., measured at a depth of .040 inch (1.02 mm) minimum. The plating on non-significant surfaces in the I.D. shall be of sufficient thickness to ensure plating continuity and uniform utility and protection. This plating may consist of an underplate only. A silver underplate shall not be permitted.

3 - Corrosion-resistant steel body, passivated finish in accordance with SAE-AMS-2700, type 2. The male pin shall be plated to a minimum gold thickness of 50 micro inches (1.27 µm) in accordance with MIL-DTL-45204, type II, grade C, class 1 (or equivalent as permitted by the qualification and preparing activities), over 50 micro inches (1.27 µm) minimum of nickel in accordance with MIL-DTL-38999, appendix A, type 2, measured anywhere along the mating surface, for all series. The socket contact shall be plated to a minimum gold thickness of 50 micro inches (1.27 µm) in accordance with MIL-DTL-45204, type II, grade C, class 1 (or equivalent as permitted by the qualification and preparing activities), over 50 micro inches (1.27 µm) minimum of nickel in accordance with MIL-DTL-38999, appendix A, type 2, including the I.D., measured at a depth of .040 inch (1.02 mm) minimum. The plating on non-significant surfaces in the I.D. shall be of sufficient thickness to ensure plating continuity and uniform utility and protection. This plating may consist of an underplate only. A silver underplate shall not be permitted.

4 - Beryllium copper body, gold finish. All copper beryllium bodied connectors are to be gold plated to a minimum thickness of 50 micro inches (1.27 µm) in accordance with MIL-DTL-45204, type II, grade C, class 1 (or equivalent as permitted by the qualification and preparing activities), over a copper flash. The male pin shall be plated to a minimum gold thickness of 50 micro inches (1.27 µm) in accordance with MIL-DTL-45204, type II, grade C, class 1 (or equivalent as permitted by the qualification and preparing activities), over 50 micro inches (1.27 µm) minimum of nickel in accordance with MIL-DTL-38999, appendix A, type 2, measured anywhere along the mating surface, for all series. The socket contact shall be plated to a minimum gold thickness of 50 micro inches (1.27 µm) in accordance with MIL-DTL-45204, type II, grade C, class 1 (or equivalent as permitted by the qualification and preparing activities), over 50 micro inches (1.27 µm) minimum of nickel in accordance with MIL-DTL-38999, appendix A, type 2, including the I.D., measured at a depth of .040 inch (1.02 mm) minimum. The plating on non-significant surfaces in the I.D. shall be of sufficient thickness to ensure plating continuity and uniform utility and protection. This plating may consist of an underplate only. A silver underplate shall not be permitted.

5 - CRES body, gold plated in accordance with MIL-DTL-45204, type II, grade C, class 1 (or equivalent as permitted by the qualification and preparing activities). Coupling nuts are to be passivated in accordance with SAE-AMS-2700, type 2. The male pin shall be plated to a minimum gold thickness of 50 micro inches (1.27 µm) in accordance with MIL-DTL-45204, type II, grade C, class 1 (or equivalent as permitted by the qualification and preparing activities), over 50 micro inches (1.27 µm) minimum of nickel in accordance with MIL-DTL-38999, appendix A, type 2, measured anywhere along the mating surface, for all series. The socket contact shall be plated to a minimum gold thickness of 50 micro inches (1.27 µm) in accordance with MIL-DTL-45204, type II, grade C, class 1 (or equivalent as permitted by the qualification and preparing activities), over 50 micro (1.27 µm) inches minimum of nickel in accordance with MIL-DTL-38999, appendix A, type 2, including the I.D., measured at a depth of .040 inch (1.02 mm) minimum. The plating on non-significant surfaces in the I.D. shall be of sufficient thickness to ensure plating

continuity and uniform utility and protection. This plating may consist of an underplate only. A silver underplate shall not be permitted.

6 - Brass body, silver finish. All brass-bodied connectors are silver plated to a minimum thickness of .0002 inch (5.08 µm) in accordance with ASTM B700, over a copper underplate. Center contact finish shall be gold plated in accordance with MIL-DTL-45204, type II, grade C, class 2 (or equivalent as permitted by the qualification and preparing activities), over a 100 micro inches (2.54 µm) copper plate.

7 - Corrosion-resistant steel body, passivated finish in accordance with SAE-AMS-2700, type 2. Center contact finish shall be gold plated to a minimum thickness of 100 micro inches (2.54 µm) in accordance with MIL-DTL-45204, type II, grade C, class 2 (or equivalent as permitted by the qualification and preparing activities), over a 100 micro inches (2.54 µm) copper plate.

8 - Beryllium copper body, gold finish. All copper beryllium bodied connectors are to be gold plated to a minimum thickness of 50 micro inches (1.27 µm) in accordance with MIL-DTL-45204, type II, grade C, class 1 (or equivalent as permitted by the qualification and preparing activities).over a copper flash. Center contact finish shall be gold plated in accordance with MIL-DTL-45204, type II, grade C, class 2, minimum (or equivalent as permitted by the qualification and preparing activities), over a 100 micro inches (2.54 µm) copper plate.

9 - CRES body, gold plated in accordance with MIL-DTL-45204, type II, grade C, class I (or equivalent as permitted by the qualification and preparing activities). Coupling nuts are to be passivated in accordance with SAE-AMS-2700, type 2. Center contact finish shall gold plated to a minimum thickness of 100 micro inches (2.54 µm) in accordance with MIL-DTL-45204, type II, grade C, class 2 (or equivalent as permitted by the qualification and preparing activities), over a 2.54 µm (100 micro inches) copper plate.

3.3.1.1 Recycled, recovered, environmentally preferable, or biobased materials. Recycled, recovered, environmentally preferable, or biobased materials should be used to the maximum extent possible, provided that the material meets or exceeds the operational and maintenance requirements, and promotes economically advantageous life cycle costs.

3.3.2 Dissimilar metals. Dissimilar metals between which an electromotive couple may exist shall not be placed in contact with each other (in accordance with MIL-STD-889).

3.3.3 Spring members. Unless otherwise specified (see 3.1), all contact spring members shall be made of copper beryllium.

3.3.4 Fungus resistance. The item shall be inherently fungus-inert.

3.3.5 Prohibited materials. Use of the following materials is prohibited unless specifically authorized by the procuring activity:

a. Hazardous and restrictive substances as can be found on the Defense Standardization Program Web site, at http://dsp.dla.mil/documents/sd-14.html.
b. Polyvinyl chloride.
c. Beryllium oxide. Not applicable to solid beryllia ceramic forms.
d. Thermally conductive greases.
e. Cadmium.
f. Zinc.
g. Tin (purities 97% or greater).

3.4 Configurations and features. Connectors shall be of the interface and physical dimensions specified (see 3.1). Each half of a connector pair must be separately optimized in VSWR (voltage standing wave radio), (see 4.6.11). It is not permitted to compensate for design deficiencies of one

connector by the design of the mating connector. NOTE: The U.S. Government preferred system of measurement is the metric SI system. However, since this item was originally designed using inch-pound units of measurement, in the event of conflict between the metric and inch-pound units, the inch-pound units shall take precedence.

3.4.1 Mating (visual indication). When applicable (see 3.1), a visual means shall be provided to indicate when two mating connectors are mated.

3.4.2 Screw threads. Unless otherwise specified (see 3.1), screw threads shall be in accordance with FED-STD-H28.

3.4.3 Connector interfaces. Unless otherwise specified (see 3.1), connector interfaces shall be in accordance with MIL-STD-348.

3.4.4 Assembly instructions. Complete assembly instructions shall be furnished by the manufacturer with each connector procured under this specification. It's not the intention of this specification to require assembly instructions with uncabled connectors (i.e., solder pot, solder tab, or posts, etc.). Assembly instructions shall include:

a. Cable preparation – stripping dimensions and tolerances.

b. List and description of crimping tools.

c. Pictorial presentation of subassemblies and loose piece parts.

d. Sufficient pertinent dimensions for verification of correct parts; as a minimum, the cable entry openings for conductor, dielectric, braid, and jacket shall be specified.

e. Recommended cable clamp tightening torque (if applicable).

f. Military PIN and manufacturers PIN.

3.5 Force to engage/disengage.

3.5.1 Bayonet and threaded types. When tested as specified in 4.6.2.1, the torque necessary to completely couple or uncouple the connectors shall not be exceeded as specified (see 3.1). Also the longitudinal force necessary to initiate the engaging or disengaging cycle shall not exceed that specified (see 3.1).

3.5.2 "Push on" connector types. When tested as specified in 4.6.2.2, the forces necessary to fully engage or disengage the connectors shall not be exceeded as specified (see 3.1).

3.6 Coupling proof torque (when specified, see 3.1). When tested as specified in 4.6.3, the coupling mechanism (threaded types) shall not be dislodged and the connector shall meet requirements of 3.5.1. The interface dimensions of the connector shall remain as specified (see 3.1).

3.7 Mating characteristics. When connectors are tested as specified in 4.6.4, the mating dimensions shall be gauged as specified (see 3.1) and the dimensions shall remain within the specified tolerances (see MIL-STD-348).

3.8 Permeability of nonmagnetic materials. When connectors (except hermetic sealed) are tested as specified in 4.6.5, the permeability "μ" (Mu) shall be less than 2.0. The permeability requirement does not apply to connector hardware.

3.9 Hermetic seal (pressurized connectors). When connectors are tested as specified in 4.6.6, the leakage rate shall not exceed that specified (see 3.1).

3.10 Leakage (pressurized connectors). When connectors are tested as specified in 4.6.7, there shall be no leakage as detected by escaping air bubbles.

3.11 Insulation resistance. When connectors are tested as specified in 4.6.8, the insulation resistance shall be not less than that specified (see 3.1).

3.12 Center contact retention (when specified, see 3.1). When connectors are tested as specified in 4.6.9, the center contacts shall not be displaced from the specified interface dimensions in the uncabled connector by the application of the specified axial force (see 3.1) in either direction.

3.13 Corrosion. When connectors are tested as specified in 4.6.10, there shall be no exposure of the base metal on the interface or mating surface, and the connectors shall meet the requirements of 3.5.1 or 3.5.2, as applicable.

3.14 VSWR. When connectors are tested as specified in 4.6.11, the VSWR shall not exceed the value specified over the frequency range (see 3.1).

3.15 Connector durability. When connectors are tested as specified in 4.6.12, they shall show no evidence of severe mechanical damage and the coupling device shall remain functional. Connectors shall meet the applicable requirements of 3.5 and 3.7.

3.16 Contact resistance. When connectors are tested as specified in 4.6.13, the contact resistance of the center contact, outer contact, and braid to connector shall be as specified (see 3.1).

3.17 Dielectric withstanding voltage. When connectors are tested as specified in 4.6.14, there shall be no evidence of breakdown.

3.18 Vibration. When the cabled (or wired, as applicable) connector is tested as specified in 4.6.15, there shall be no electrical interruptions exceeding 1 microsecond or as otherwise specified (see 3.1). There shall be no evidence of visual or mechanical damage after the test, and the contact resistance of the center contact shall not be changed by more than the specified amount (see 3.1 and 3.16).

3.19 Shock (specified pulse). When the cabled (or wired, as applicable) connector is tested as specified in 4.6.16, there shall be no electrical interruptions exceeding 1 microsecond unless otherwise specified (see 3.1). There shall be no evidence of visual or mechanical damage after the test and, the contact resistance of the center contact shall not be changed by more than the specified amount (see 3.1).

3.20 Temperature cycling. When tested as specified in 4.6.17, there shall be no evidence of visual or mechanical damage to the connector and it shall meet the dielectric withstanding voltage requirement (see 3.17) and the contact resistance specified for the center contact shall not be exceeded (see 3.16).

3.21 Humidity. When connectors are tested as specified in 4.6.18, there shall be no evidence of damage. Connectors shall withstand the dielectric withstanding voltage specified (see 3.17) and the insulation resistance shall not be less than that specified (see 3.11).

3.22 Corona level. When connectors are tested as specified in 4.6.19, at the altitude and voltage specified (see 3.1), there shall be no evidence of sustained discharge.

3.23 RF high potential withstanding voltage. When connectors are tested as specified in 4.6.20, there shall be no breakdown and the leakage current specified shall not be exceeded (see 3.1).

3.24 Cable retention force. When connectors are tested as specified in 4.6.21, there shall be no evidence of mechanical failure, loosening, rupture, or discontinuity. The direct clamping of the cable jacket shall not be the primary method of cable retention.

3.25 Coupling mechanism retention force. When tested as specified in 4.6.22, the coupling mechanism shall not be dislodged from the connector and the connector shall be capable of meeting the requirements of 3.5.1 immediately after the test.

3.26 Shielding effectiveness. When connectors are tested as specified in 4.6.23, the total leakage, cable to cable, shall not exceed that specified (see 3.1).

3.27 RF Transmission loss. When connectors are tested as specified in 4.6.24, the RF transmission loss shall not exceed that specified over the frequency range (see 3.1).

3.28 Porosity. When gold-plated contacts are examined for plating porosity as specified in 4.6.25, there shall be no bubbling during the 30 second observation period.

3.29 Solderability. Connectors shall be tested as specified in 4.6.26. Solder joints between the connector and the cable outer conductor and between the center contact and cable inner conductor shall withstand the specified forces.

3.30 Safety wire hole pullout. When applicable (see 3.1), connectors are to be tested as specified in 4.6.27. There shall be no evidence of hole tear-out.

3.31 Thermal vacuum outgassing. When tested in accordance with 4.6.28, all nonmetallic materials of the connector assembly shall have maximum total mass loss (TML) of 1.0% of the original specimen mass and shall have a maximum volatile condensable material (VCM) content of 1.0% of the original specimen mass.

3.32 Flammability. When tested in accordance with 4.6.29, nonmetal materials shall be considered nonflammable or self-extinguishing if less than 6 inches of the minimum use thickness sample is consumed and the time of burning does not exceed 10 minutes. There shall be no sparking, sputtering, or dripping of flaming particles from the test sample.

3.33 Odor. When tested in accordance with 4.6.30, nonmetal materials shall rate not greater than 2.5.

3.34 Toxicity (offgassing). When tested in accordance with 4.6.31, all nonmetal materials shall have a total hazard index value less than 0.5.

3.35 Marking. Connectors and associated fittings shall be permanently and legibly marked in accordance with the marking requirements of MIL-STD-130 with the PIN (see 1.1.2), the manufacturer's CAGE code and final assembly date code. All parts manufactured to this specification shall be marked unless specific exceptions are granted on the specification sheet. The marking location is optional; when practical, a location should be picked that will least likely be covered in cable assembly or installation.

NOTE: Date code marking requirements shall be in accordance with MIL-STD-1285.

3.36 JAN brand. The United States Government has adopted, and is exercising legitimate control over the certification marks "JAN" and "J", respectively, to indicate that items so marked or identified are manufactured to, and meet all the requirements of specifications. Accordingly, items acquired to, and meeting all of the criteria specified herein and in applicable specifications shall bear the certification mark "JAN" except that items too small to bear the certification mark "JAN" shall bear the letter "J". The "JAN" or "J" shall be placed immediately before the PIN except that if such location would place a hardship on the manufacturer in connection with such marking, the "JAN" or "J" may be located on the first line above or below the PIN. Items furnished under contracts or orders which either permit or require deviation from the conditions or requirements specified herein or in applicable specifications shall not bear "JAN" or "J". In the event an item fails to meet the requirements of this specification and the applicable specification sheets or associated performance specifications, the manufacturer shall remove completely the military pin and the "JAN" or the "J" from the sample tested and also from all items represented by the sample. The "JAN" or "J" certification mark shall not be used on products acquired to contractor drawings or

specifications. The United States Government has obtained Certificate of Registration Number 504,860 for the certification mark “JAN” and Registration number 2,577,735 for the certification mark “J”.

NOTE: The “JAN” or “J” is not part of the PIN.

3.37 Workmanship. Connectors and associated fittings shall be processed in such a manner as to be uniform in quality and shall be free from sharp edges, burrs, and other defects that will affect fit, serviceability, or appearance. Threads shall be examined under a X10 power lens for plating; burrs, flaking, etc., shall not be permitted.

4. VERIFICATION

4.1 Classification of inspections. The inspection requirements specified herein are classified as follows:

a. Qualification inspection (see 4.4).

b. Conformance inspection (see 4.5).

c. Periodic inspection (see 4.5.2).

4.2 Test equipment and inspection facilities. Test and measuring equipment and inspection facilities of sufficient accuracy, reliability and quantity to permit performance of the required inspection shall be established and maintained by the contractor. The establishment and maintenance of a calibration system to control the accuracy of the measuring and test equipment (i.e., industry standards, military standards) shall be required.

4.3 Inspection conditions. Unless otherwise specified, all inspections shall be performed in accordance with the test conditions specified in the “GENERAL REQUIREMENTS” of MIL-STD-202 or EIA/ECA 364. For each test of threaded coupling connectors, where the test is performed on mated pairs, the pair shall be torqued to the specified value (see 3.1).

4.3.1 QPL system. The manufacturer shall establish and maintain a system to meet the requirements of MIL-STD-790 and the requirements herein (see 3.2). Evidence of such compliance shall be verified by the qualifying activity as a prerequisite for qualification and retention of qualification. The following exceptions to MIL-STD-790 shall apply.

a. Distributor, category A: An organization contractually authorized by a manufacturer to store and distribute (sell) completely finished parts. These parts shall have been completely assembled and inspected by the manufacturer to all the applicable requirements of the specification.

b. Basic plan: The manufacturer shall document a product assurance program plan in a manner adequate to demonstrate compliance to section 5 of MIL-STD-790 or intent to comply prior to receipt of qualification approval. When the program plan indicates intent to comply, the documentation shall include an implementation schedule. One program plan shall be required by a single manufacturing facility. The qualifying activity shall determine the adequacy and approve the program plan in so far as it relates to the requirements specified in section 5 and appendixes A and B of MIL-STD-790.

c. Distributor organizations: The manufacturers shall identify each authorized category A, B or C distributor or distributor’s assembly plant, the function each organization is authorized to perform, and the authorized address at which the functions are performed. Any change in functions or the addition or deletion of a distributor or a distributor’s assembly plant shall be reported to the qualifying activity within 10 days after such an occurrence.

d. Corrective action plan: Where failures or defects are greater than the prescribed limits, the

manufacturer shall prepare a plan or recommendation for corrective action. Corrective action recommendations for performance failures shall include failure mode information and shall be supported by verifying data, or a proposed evaluation test plan. Corrective action on parts covered by the specification, which after design parameters previously submitted to the qualifying activity, shall not be made without approval from the qualifying activity, except those actions which consist only of improvements in control procedures. Corrective action affecting control procedures shall not be implemented for production until approved by qualified personnel responsible for the engineering, quality control, and reliability functions of the manufacturer.

e. Process control: Records shall cover the implementation of devices such as control charts (e.g., X bar and R charts) or other means of indication of the degree of control achieved in the production process. Records shall also indicate the action taken when each out of control condition is observed, and the disposition of product not conforming to the manufacturers established prescribed limits. Records associated with nonconforming products shall be held for a minimum of 3 years. A formal SPC program shall be established.

f. Self-audit requirements: Manufacturing flowcharts do not have to contain internal document control numbers pertaining to each process performed and quality control station.

4.3.2 SPC. A SPC program shall be established and maintained. Evidence of such compliance shall be verified by the qualifying activity as a prerequisite for qualification and retention of qualification.

4.4 Qualification inspection. Qualification inspection shall be performed at a laboratory acceptable to the Government (see 6.3) on sample units produced with equipment and procedures normally used in production.

4.4.1 Sample size. Connectors of the same PIN with its mating connector, when applicable (see 1.1.2), shall be subjected to qualification inspection. The number of samples shall be as specified in table I.

4.4.1.1 Sample size (contacts). Ten sets of pin and socket contacts shall be subjected to qualification inspection.

4.4.2 Group qualification. For group qualification of all series of connectors covered by this specification, see 3.1. The Government reserves the right to authorize performance of any or all qualification inspection of additional types in the group that are considered necessary for qualification within each group.

4.4.3 Inspection routine. The sample shall be subjected to the inspections specified in table I. All sample units shall be subjected to the inspection of group I. The sample size shall be as specified in table I. The sample units shall then be subjected to the inspection for their particular group and in the sequence given for that group.

4.4.4 Failures. One or more failures shall be cause for refusal to grant qualification approval.

TABLE I. Qualification inspection.

Inspection	Requirement paragraph	Test method paragraph
Group I 1/		
Force to engage/disengage:	3.5.1	4.6.2.1
Bayonet arid threaded types	3.5.2	4.6.2.2
"Push-on" connector types		
Coupling proof torque (when specified, see 3.1)	3.6	4.6.3
Mating characteristics	3.7	4.6.4
Permeability of nonmagnetic materials	3.8	4.6.5
Workmanship	3.37	4.6.1
Hermetic seal (pressurized connectors)	3.9	4.6.6
Leakage (pressurized connectors)	3.10	4.6.7
Insulation resistance	3.11	4.6.8
Group II (3 samples) 2/		
VSWR	3.14	4.6.11
Corrosion	3.13	4.6.10
VSWR	3.14	4.6.11
Group III (3 samples)		
VSWR	3.14	4.6.11
Connector durability	3.15	4.6.12
Vibration	3.18	4.6.15
Shock (specified pulse)	3.19	4.6.16
Temperature cycling 3/	3.20	4.6.17
VSWR	3.14	4.6.11
Contact resistance	3.16	4.6.13
Cable retention force	3.24	4.6.21
Group IV (3 samples)		
Dielectric withstanding voltage	3.17	4.6.14
Humidity	3.21	4.6.18
Corona level	3.22	4.6.19
RF high potential withstanding voltage	3.23	4.6.20
Coupling mechanism retention force	3.25	4.6.22
Safety wire hole pullout	3.30	4.6.27
Group V (3 samples)		
Shielding effectiveness	3.26	4.6.23
Group VI (3 samples)		
RF transmission loss	3.27	4.6.24
Group VII (3 samples) 2/		
Humidity	3.21	4.6.18
Insulation Resistance	3.11	4.6.8

See footnotes at end of table.

TABLE I. Qualification inspection – Continued.

Inspection	Requirement paragraph	Test method paragraph
Group VIII (3 samples)		
Solderability	3.29	4.6.26
Group IX (3 samples) 4/		
Thermal vacuum outgassing	3.31	4.6.28
Flammability	3.32	4.6.29
Odor	3.33	4.6.30
Toxicity (offgassing)	3.34	4.6.31
Group X (3 samples)		
Center contact retention (when specified, see 3.1)	3.12	4.6.9
Corrosion 5/	3.13	4.6.10

1/ The number of samples is dependent on the number of groups tested.
2/ Applicable to sealed connectors only.
3/ Following this test and prior to performing VSWR, 3 cycles of mating and unmating shall be accomplished.
4/ Applicable to qualification of space grade connectors only.
5/ This corrosion test is not applicable to sealed connectors.

4.4.5 Retention of qualification. To retain qualification, the contractor shall verify in coordination with the qualifying activity the capability of manufacturing products which meet the performance requirements of this specification. Refer to the qualifying activity for the guidelines necessary to retain qualification to this particular specification. The contractor shall immediately notify the qualifying activity at any time that the inspection data indicates failure of the qualified product to meet the performance requirements of this specification.

TABLE II. Contact qualification and group B inspection.

Inspection	Requirement paragraph	Test method paragraph
Group I		
Porosity	3.28	4.6.25

4.5 Conformance inspection.

4.5.1 Inspection of product for delivery. Inspection of product for delivery shall consist of groups A and B inspection.

4.5.1.1 Inspection lot. An inspection lot shall consist of all the connectors and associated fittings comprised of identical piece parts produced under essentially the same conditions and offered for inspection at one time.

4.5.1.2 Group A inspection. Group A inspection shall consist of the inspections specified in table III in the order shown.

4.5.1.2.1 Sampling plan (group A). Table III tests shall be performed on a production lot basis. Samples shall be selected in accordance with table IV. If one or more defects are found, the lot shall be screened for that particular defect(s) and defects removed. A new sample of parts shall be selected in accordance with table IV and all group A tests again performed. If one or more defects are found in the second sample, the lot shall be rejected and shall not be supplied to this specification.

TABLE III. Group A inspection. 1/

Inspection	Requirement paragraph	Test method paragraph	Sampling procedure
Visual and mechanical inspection:			
Material	3.3	4.6.1	
Finish	3.3.1	4.6.1	
Dissimilar metals	3.3.2	4.6.1	
Design and construction	3.1 and 3.4	4.6.1	
Marking	3.35	4.6.1	See table IV
Workmanship	3.37	4.6.1	
Mating (visual indication)	3.4.1	4.6.1	
Hermetic seal (pressurized connectors) 2/	3.9	4.6.6	
Leakage (pressurized connectors) 2/	3.10	4.6.7	
Interface dimensions	3.4.3	4.6.1.1	

1/ Verification may be accomplished using the manufacturer's process controls providing these controls are clearly equal to or more stringent than the requirements of this specification.
2/ These are in-process tests (100% inspection required).

4.5.1.2.2 Visual inspection (group A inspection). Each connector and accessory shall be visually examined for completeness, workmanship, and identification requirements. Attention shall be given to those assemblies that require a gasket to determine the condition of the gasket. Gaskets missing, twisted, buckled, kinked, or damaged in any way shall be cause for rejection.

4.5.1.2.3 Interface dimension inspection. Inspection of the mating dimensions (nondestructive measurements only) in accordance with MIL-STD-348 is considered critical.

TABLE IV. Inspection level for group A.

Lot size	Visual and mechanical inspection
1 to 20	All
21 to 280	20
281 to 1,200	47
1,201 to 3,200	53
3,201 to 10,000	68
10,001 to 35,000	77
35,001 to 150,000	96
150,001 to 500,000	119
500,001 and over	143

4.5.1.3 Group B inspection. Group B inspection shall consist of the inspections specified in table V in the order shown, and shall be made on sample units which have been subjected to and passed the group A inspection. Connectors having identical piece parts may be combined for lot purposes and shall be in proportion to the quantity of each PIN numbered adapter produced.

4.5.1.3.1 Group B sampling plan. A sample of parts shall be randomly selected in accordance with table VI. If one or more defects are found, the lot shall be screened for that particular defect(s) and detects removed. After screening and removal of defects, a new sample of parts shall be randomly selected and subjected to all tests in accordance with table V. If one or more defects are found in the second sample, the lot shall be rejected and shall not be supplied to this specification.

TABLE V. Group B inspection.

Inspection	Requirement paragraph	Test method paragraph
Force to engage/disengage		
Bayonet and threaded types	3.5.1	4.6.2.1
"Push-on" connector types	3.5.2	4.6.2.2
Coupling proof torque (when specified, see 3.1)	3.6	4.6.3
Mating characteristics	3.7	4.6.4
Permeability of nonmagnetic materials	3.8	4.6.5
Dielectric withstanding voltage	3.17	4.6.14
Insulation resistance	3.11	4.6.8
VSWR (cabled)	3.14	4.6.11

TABLE VI. Inspection level for group B.

Lot size	Sample size	VSWR sample size
1 to 5	All	1
6 to 15	5	1
16 to 50	5	2
51 to 90	5	3
91 to 150	11	3
151 to 280	13	3
281 to 500	16	3
501 to 1,200	19	5
1,201 to 3,200	23	5
3,201 to 10,000	29	5
10,001 to 35,000	35	5
35,001 and over	40	8

4.5.1.3.2 Disposition of sample units. Sample units which have passed all the group B inspection may be delivered on the contract or purchase order, if the lot is accepted. Any connector or connector part deformed or otherwise damaged during testing shall not be delivered on the contract or order.

4.5.2 Periodic inspection. Periodic inspection shall consist of group C. Except where the results of these inspections shown noncompliance with the applicable requirements (see 4.5.2.1.4), delivery of products which have passed groups A and B shall not be delayed pending the results of these periodic inspections.

4.5.2.1 Group C inspection. Group C inspection shall consist of the inspections specified in table VII, in the order shown. Group C inspection shall be made on sample units selected from inspection lots which have passed the groups A and B inspection.

TABLE VII. Group C inspection.

Inspection	Requirement paragraph	Test method paragraph
Subgroup 1		
Corrosion 1/	3.13	4.6.10
Center contact retention (when specified, see 3.1)	3.12	4.6.9
Subgroup 2 2/		
VSWR	3.14	4.6.11
Corrosion	3.13	4.6.10
VSWR	3.14	4.6.11
Subgroup 3		
VSWR	3.14	4.6.11
Connector durability	3.15	4.6.12
Vibration	3.18	4.6.15
Shock (specified pulse)	3.19	4.6.16
Temperature cycling 3/	3.20	4.6.17
VSWR	3.14	4.6.11
Cable retention force	3.24	4.6.21
Subgroup 4		
Humidity	3.21	4.6.18
Corona level	3.22	4.6.19
RF high potential withstanding voltage	3.23	4.6.20
Coupling mechanism retention force	3.25	4.6.22
Safety wire hole pullout	3.30	4.6.27
Subgroup 5		
Shielding effectiveness	3.26	4.6.23
Subgroup 6		
RF transmission loss	3.27	4.6.24
Subgroup 7		
Contact resistance	3.16	4.6.13

See footnotes at end of table.

TABLE VII. Group C inspection – Continued.

1/ Not applicable to sealed connectors.
2/ Applicable to sealed connectors only.
3/ Following this test and prior to performing VSWR, 3 cycles of mating and unmating shall be accomplished.

4.5.2.1.1 Sampling plan. Fourteen sample units of the same PIN shall be selected from the first lot produced after the date of notification of qualification. Thereafter, fourteen sample units of the same PIN shall be selected from current production after 200,000 connectors have been produced, or not less than once every 3 years, whichever occurs first. The sample units shall be divided equally and subjected to the inspections of the seven subgroups.

4.5.2.1.2 Failures. If one or more sample units fail to pass group C inspection, the sample lot shall be considered to have failed.

4.5.2.1.3 Disposition of sample units. Sample units which have been subjected to group C inspection shall not be delivered on the contract or order.

4.5.2.1.4 Noncompliance. If a sample fails to pass group C inspection, the manufacturer shall notify the qualifying activity and the cognizant inspection activity of such failure and take corrective action on the materials or processes, or both, as warranted, and on all units of product which can be corrected and which are manufactured under essentially the same materials and processes, and which are considered subjected to the same failure. Acceptance and shipment of the product shall be discontinued until corrective action acceptable to the qualifying activity has been taken. After the corrective action has been taken, group C inspection shall be repeated on additional sample units (all tests and examinations, or the test which the original sample failed, at the option of the qualifying activity). Groups A and B inspections may be reinstituted; however, final acceptance and shipment shall be withheld until the group C inspection has shown that the corrective action was successful. In the event of failure after reinspection, information concerning the failure shall be furnished to the cognizant inspection activity and the qualifying activity.

4.6 Methods of inspection. The following identified tests and test methods assure connector integrity within typical operating conditions and applications. Alternate commercial industry standard test methods are allowed; however when an alternate method is used, the qualifying activity must be notified prior to the performance of the test. The methods described herein are proven methods and shall be the referee method in case of dispute.

4.6.1 Visual and mechanical inspection. Connectors and associated fittings shall be examined to verify that the design, construction, physical dimensions, assembly instructions, marking and workmanship are in accordance with the applicable requirements (see 3.1, materials, 3.4, 3.35 and 3.37).

4.6.1.1 Dimensional inspection. Mating dimensions shall be inspected by mating the connector with its applicable mating gauges or other suitable means acceptable to the Government.

4.6.2 Force to engage/disengage.

4.6.2.1 Bayonet and threaded types (see 3.5.1). The connector shall be engaged with its mating standard part (see 3.1). During the entire coupling/uncoupling cycle (until the connector is fully engaged/disengaged), the forces and/or torques necessary shall not exceed those specified (see 3.1). A thread coupled connector is fully engaged with its mating standard part when their reference planes (see 3.1) coincide. A bayonet coupled connector is fully engaged with its mating standard part when the bayonet studs have passed the detent and their reference planes coincide. No additional tightening torque shall be applied. The mating standard part is a steel jig, containing the critical interface dimensions finished to the tolerances specified (see 3.1), or a qualified mating connector with the approval of the qualifying activity. Its spring members, when applicable, shall be heat treated beryllium

copper. The surface finish of mating surfaces shall be 16 microinches, maximum, in accordance with ASME B46.1.

4.6.2.2 "Push-on" connector types (see 3.5.2). The connector under test shall be engaged with its standard mating part (gauge). During this engaging cycle, the force necessary to fully engage the connectors shall not exceed that specified (see 3.1). Upon completion of engagement, an opposite force necessary for disengagement shall be applied. This force shall be within the limits specified, and shall include any unlatching forces required.

4.6.3 Coupling proof torque (see 3.6). The connector under test shall be engaged with its mating standard part (gauge) and the coupling nut tightened to the torque value specified (see 3.1). After one minute, the connector under test and its mating standard part shall be disengaged.

4.6.4 Mating characteristics (see 3.7). After insertion of the specified oversized pin, the specified number of times (see 3.1), the contact to be tested shall be held rigid by means of a suitable jig or fixture. A gauge containing the test pin or test ring and a suitable force indicating dial shall be aligned to within 0.004 TIR of any plane passing through the axis of the contact under test. Engagement or withdrawal of the test pin or test ring shall be made smoothly and at such a rate that the dial does not bounce or otherwise give a false reading. The test pin or test ring may be chamfered to facilitate entry, but the specified engagement length shall not include the chamfer length and the finish shall be as specified and in accordance with ASME B46.1.

4.6.5 Permeability of nonmagnetic materials (see 3.8). The permeability of the connector shall be measured with an indicator conforming to ASTM A342/A342M.

4.6.6 Hermetic seal (pressurized connectors) (see 3.9). Connectors shall be tested in accordance with method 112, MIL-STD-202. The following details shall apply:

a. Test condition letter: C.
b. Procedure number: III.
c. Leakage rate sensitivity: 10^{-8} cm^3 per second.

4.6.7 Leakage (pressurized connectors) (see 3.10). Connectors shall be subjected to the air pressure specified (see 3.1) applied to one end, and the whole assembly immersed in water at a temperature of 15°C to 25°C. The connector shall remain immersed for at least 2 minutes.

4.6.8 Insulation resistance (see 3.11). The connector shall be measured with an apparatus suitable to verify compliance with the applicable detail specification requirement. The following details shall apply:

a. Unless otherwise specified (see 3.1), the measurement error, including the error of the test voltage source and the error of the indicating circuit, shall not exceed 10%.

b. The test voltage shall be 500 volts dc and polarity shall be such that the outer conductor is at ground potential.

c. Unless otherwise specified (see 3.1), readings shall be taken immediately after an uninterrupted 2-minute electrification period. However, a stable, or an increasing reading indicating compliance with the specification requirement obtained before elapse of the 2-minute electrification period shall be acceptable.

4.6.9 Center contact retention (see 3.12). An axial force (see 3.1) shall be applied, first in one direction and then the other, to the center contact of an assembled and uncabled connector utilizing a method and force measuring device suitable to the Government. The inner contact shall be inspected after the force has been applied in one direction and gain after the force has been applied in the opposite direction to determine if the contact has been displaced from the specified interface dimensions.

4.6.10 Corrosion (see 3.13). Unmated and uncabled connectors shall be tested in accordance with test procedure EIA/ECA 364-26. The following details and exceptions shall apply:

a. Test condition letter (see 3.1). Connectors tested to 500 hours corrosion shall be tested in the mated condition.

b. Salt solution: 5%.

After exposure, connectors shall be washed, shaken, and lightly brushed as specified in test procedure EIA/ECA 364-26 and then permitted to dry for 24 hours at 40°C. Connectors shall then be examined for evidence of corrosion, pitting, and ease of coupling.

4.6.11 VSWR (see 3.14). The VSWR shall be measured in accordance with the following procedure or a method acceptable to the Government. In the event of dispute the method outlined herein shall be used. Diagrams for the swept frequency VSWR system to check out the measurement procedures are shown on figure 1.

In the basic measurement setup on figure 1, detector 1 provides a feedback signal to the swept RF source in order to normalize the output signal of detector 2. The frequency-amplitude characteristics of detectors 1 and 2 should be matched within .5 dB.

To measure VSWR several sweeps are made with the slotted line probe incrementally positioned over at least a half wave length at the lowest frequency of interest. In this manner an X-Y display is generated whose upper and lower envelope limits represent maximum and minimum amplitudes of the standing wave for each frequency in the test band. A base line may be generated by making a sweep with no input to the measurement channel amplifier. The resultant X-Y display is calibrated according to the characteristics of the measurement channel detector and amplifier, e.g., linear, square law, logarithmic, etc .

The VSWR test system is checked out successively terminating the slotted line with the elements shown in steps 1 and 2 and sweeping the frequency over the specified test band. In step 1 the system VSWR shall be less than 1.02 + .004 F (F measured in GHz). In step 2, the system VSWR shall be as specified.

For qualification and group C inspection, the system is checked out with the slotted line terminated as in step 3 using the specified cable. The impedance variation (random and/or periodic) from the nominal characteristic impedance specified for the selected test cable should be no more than 1.0 percent when tested by time domain reflectometry. In step 3, the system VSWR shall be as specified. For qualification and group C inspection, the connector under test is measured with the slotted line terminated as in step 4. The VSWR shall be as specified.

Group B inspection tests are performed with the slotted line terminated as shown in step 7. The input part of the cable simulator must have the same interface configuration, dimensions, and dielectric as the recommended cable interface for the connector under test. The cable simulator for group B inspection tests must meet the specified VSWR when tested as shown in step 6.

The standard precision adapter interface shall conform to IEEE Standard 287. Item 6 (standard precision adapters) shall not exceed the specified VSWR requirements. Standard test adapter designs shall be approved by the military qualifying agency.

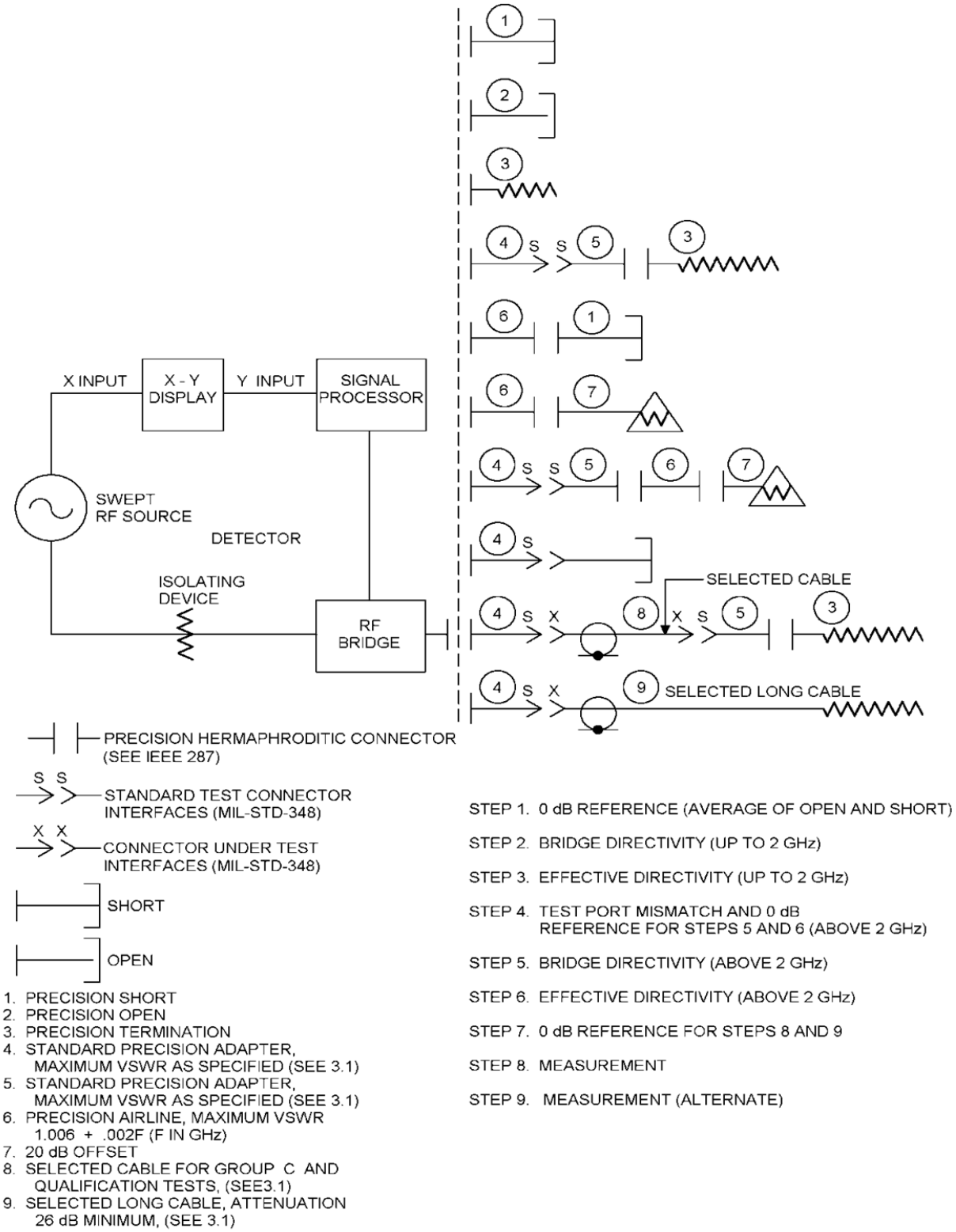

FIGURE 1. VSWR test setup.

4.6.12 Connector durability (see 3.15). Each connector under test shall be mated with a typical production connector per this specification. The connector shall be subjected to the number of cycles of mating and unmating specified (see 3.1). The connector and its mating part shall be completely engaged and completely disengaged during this cycle. Lubrication of the threads or rotational parts shall not be employed for this test unless specified (see 3.1). It is permissible to shake or blow debris from the threads or interface surfaces at intervals of not less than 50 cycles. Solvents or tools shall not be used for cleaning.

4.6.13 Contact resistance (see 3.16). All contact resistance tests shall be conducted with the apparatus shown on figure 2. Circuit adjustments and the measurement procedure for all contact resistance tests shall be in accordance with 4.6.13.1. The contact resistance points to be measured are:

a. The contact resistance between the cable braid or outer conductor and the connector at the point of contact.

b. The contact resistance of the mated outer conductor contacts.

c. The contact resistance of the mated inner conductor contacts.

4.6.13.1 General procedure. The apparatus shall be assembled as shown on figure 2. The contacts C1-C2 shown on the figure represent the mating contacts upon which millivolt drop tests are to be conducted.

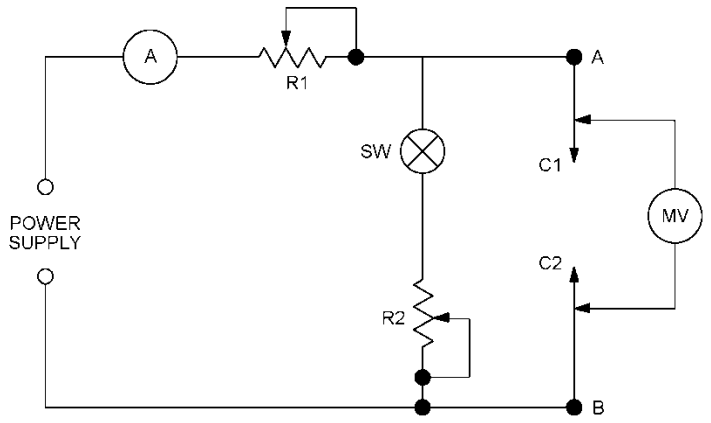

Procedure:

a. Remove contacts C1-C2 from the measuring circuit.
b. Close switch SW.
c. Adjust R2 for a millivoltmeter (mVm) reading of 50 millivolts.
d. Connect contacts C1-C2 to the measuring circuit and mate.
e. Check to see that the mVm drops significantly prior to opening switch in step “f”.
f. Open switch SW.
g. Adjust R1 for a circuit current (A) of one ampere.
h. Measure the millivolt drop across contacts C1-C2 and call this “e”.
i. Compute contact resistance. Contact resistance (milliohms) = e millivolts ÷ one ampere

FIGURE 2. Contact resistance.

4.6.14 Dielectric withstanding voltage (see 3.17). Connectors shall be tested in accordance with test procedure EIA/ECA 364-20. The following details shall apply:

a. Special preparation or conditions.

(1) The maximum relative humidity shall be 50%. When facilities are not available at this test condition, connectors shall be tested at room ambient relative humidity. In case of dispute, if the test has been made at room ambient relative humidity, retest shall be made at 50% maximum relative humidity.

(2) The center contact of plug connectors and receptacle connectors shall be positioned in such a manner as to simulate actual assembly conditions.

(3) Precautions shall be taken to prevent air-gap voltage breakdowns.

(4) The voltage shall be metered on the high side of the transformer.

b. Magnitude of test voltage (see 3.1). The voltage shall be instantaneously applied.

c. Nature of potential: Alternating current.

d. Points of application of test voltage: Between the center contact and body.

4.6.15 Vibration (see 3.18). A complete connector assembly shall be mounted as shown on figure 3 and vibrated in accordance with test procedure EIA/ECA 364-28 condition III. The center and outer contacts shall be connected to a suitable monitoring device. Suitable coaxial cable or wire, as applicable, using the normal connecting devices of the connector and clamped as shown on figure 3, shall be used. At least 100 milliamperes shall be flowing through each set of contacts. Contacts may be connected in series. The connector shall be mounted by its normal mounting device and engaged by its normal coupling device. No safety wire shall be used. Cable to cable connectors may be held to the jig of figure 3 by a suitable clamp on one half of the connector assembly. The following conditions shall apply:

a. Test condition letter (see 3.1).

b. Continuity shall be monitored during vibration with a detector capable of detecting interruptions of 1 microsecond duration or longer, or as specified at 100 milliamperes.

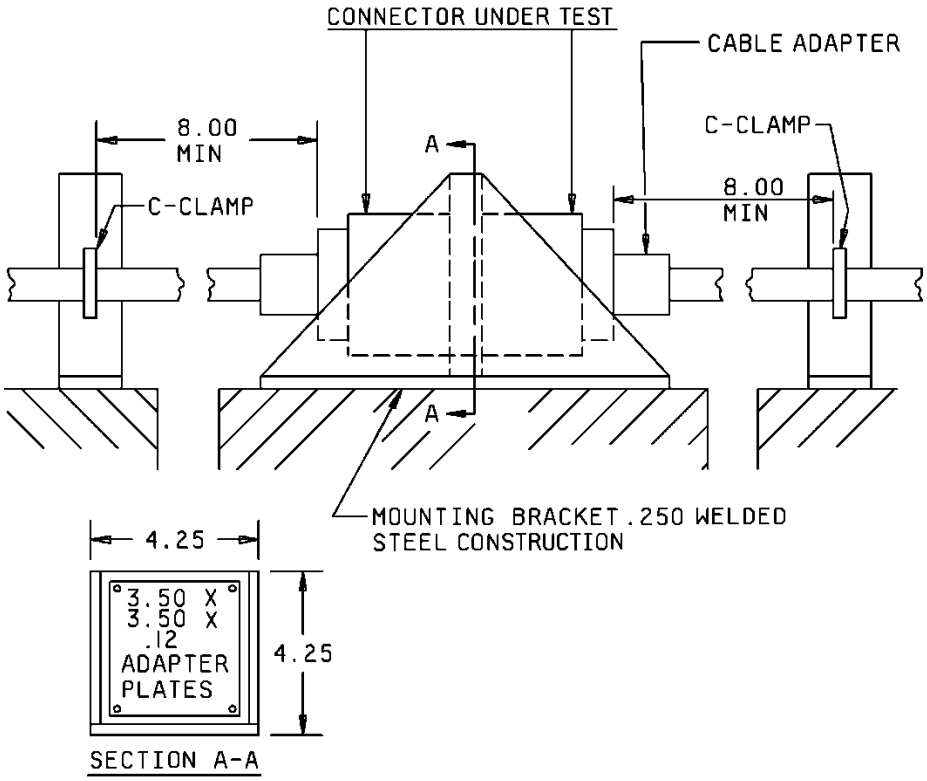

Inches	mm
.12	3.1
.250	6.35
3.50	88.9
4.25	107.9
8.00	203.2

NOTE: Dimensions are in inches.

FIGURE 3. Vibration test setup.

4.6.16 Shock (specified pulse) (see 3.19). The connector shall be mated with its mating connector (see 3.1) and subjected to test procedure EIA/ECA 364-27 condition G. The following details and exceptions shall apply:

a. Receptacle and panel or bulkhead mounted connectors and adapters shall be mounted by normal means. All other connectors and adapters shall be rigidly clamped to the vibration table.

b. Acceleration requirements (see 3.1).

c. Three blows in each of three mutually perpendicular planes; one of which shall be parallel to the axis of the connector.

d. Continuity shall be monitored during shock as specified in 4.6.15b.

e. Center contact resistance shall be measured in accordance with 4.6.13 after the shock test.

4.6.17 Temperature cycling (see 3.20). Connectors shall be subjected to test procedure EIA/ECA 364-32. The following details shall apply:

a. Test condition letter (see 3.1).

b. The contact resistance tests on the center contact shall be performed before and after the thermal shock test and examined for mechanical damage (see 3.1).

c. Continuity shall be monitored during temperature cycling as specified in 4.6.15b.

4.6.18 Humidity (see 3.21). The connector shall be mated and cabled with its mating connector and shall be subjected to test procedure EIA/ECA 364-31 condition B. The following exceptions and conditions shall apply:

a. No initial measurements.

b. No load.

c. Step 7b (vibration) shall be omitted.

d. Measurements shall be made at high humidity when specified (see 3.1).

e. The connector shall withstand the dielectric withstanding voltage specified (see 4.6.14) after the drying period.

4.6.19 Corona level (see 3.22). The mated test connector shall be subjected to a gradually increasing sinusoidal voltage until a detector indicates a sustained corona discharge. The following details shall apply:

a. Sensitivity of the detection equipment shall permit observation of corona of five picocoulombs or less.

b. The connector to be tested shall be prepared using the type of cable specified (see 3.1). No grease or similar compounds shall be used to seal the connector.

c. After installation of the test connector in a vacuum chamber and connection on the test connector to a corona test system, reduce the pressure in the chamber to that specified (see 3.1).

d. Slowly increase the 48 to 62 Hz test voltage until the detector indicates a sustained corona discharge or reaches two times the specified corona extinction voltage.

e. If sustained corona discharge is indicated, the voltage shall then be decreased slowly until the corona extinction point is observed. The corona extinction voltage is defined as the voltage at which sustained discharge ceases. If sustained corona has not been observed at two times the specified corona extinction level, the requirement is considered to have been satisfied.

4.6.20 RF high potential withstanding voltage (see 3.23). Connectors shall be mated with their mating connectors (see 3.1) and approximately 50.8 mm (2 inches) of their standard cable (see 3.1) appropriately attached. This assembly shall then be inserted into the high impedance circuit as shown on figure 4, or equivalent, and instantaneously subjected to the RF voltage and frequency specified (see 3.1) between the center contact and the body of the connectors. The duration of the test shall be 1 minute. The RF voltage source shall be frequency stabilized and have an appropriate pure sine wave output with minimum harmonic content. Means shall be provided to indicate disruptive discharge and leakage current. The maximum leakage current shall be as specified (see 3.1).

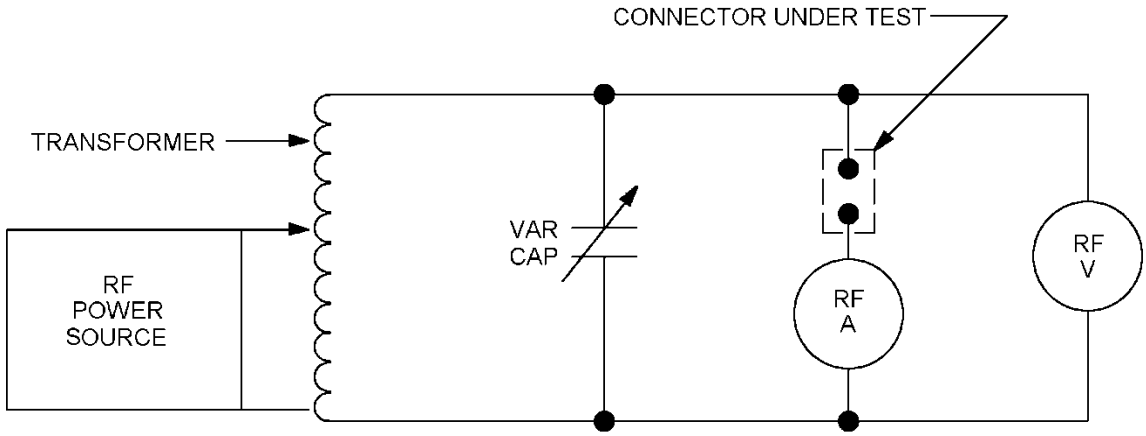

FIGURE 4. Circuit diagram for RF high potential withstanding voltage.

4.6.21 Cable retention force (see 3.24). When applicable (see 3.1), the connector shall be assembled to its standard mating test cable. The connector shall be firmly fixed and a movable sleeve attached to the cable. The sleeve is then moved longitudinally away from the fixed connector gradually and in such a manner that the cable remains unbent and untwisted. A scale for measuring the retention force (see 3.1) shall be attached to the sleeve. The force shall be held for 30 seconds minimum. The assembly shall then be examined for mechanical failure, loosening, or rupture and tested for continuity with a simple 115 volt, 60 Hz ac lamp circuit. With the connector still in the fixed position, the cable shall be held at a point ten times the diameter of the cable from the connector and a torque shall be applied in both directions as specified (see 3.1). The cable shall then be bent at a radius of 10 times the diameter of the cable starting at the connector at an angle of 90° ± 5° from the axis of the connector, then reversed 180° ± 10°. Repeat this procedure four times, then retest and reexamine as outlined above.

4.6.22 Coupling mechanism retention force (see 3.25). The connector body and coupling mechanism shall be respectively secured to the lower and upper jaws of a tensile tester in an appropriate manner. A tensile load shall be applied at a rate of approximately 445 N/minute (100 pounds/minute) up to the force as specified and held at that value for one minute (see 3.1). During the one minute of steadily applied force, the coupling mechanism shall be rotated with respect to the connector body, two full revolutions in each direction.

4.6.23 Shielding effectiveness (see 3.26). The connector shall be subjected to test procedure tri-axial cavity per MIL-PRF-39012 or EIA/ECA 364-66. Since the connector under test has a 50-ohm interface, there shall be no modification to the connector interface.

4.6.24 RF transmission loss (see 3.27). RF transmission loss shall be determined in accordance with the following procedure or an alternate method acceptable to the Government. In the event of dispute, the method outlined herein shall be used.

4.6.24.1 Test sample. The test sample shall be a short cable assembly with the connector under test on one end and the mating type connector on the opposite end of the applicable cable (see 3.1). The test sample cable shall be a section of the long cable measured in step 3 of 4.6.24.2.2. The length of the test sample should be such as to minimize the loss due to the cable alone and sufficiently long so that there is at least a short length of cable whose characteristics remain unchanged by the cable stripping and connector assembly procedure. The cable length in the test sample is defined as the distance from face to face of the cable dielectric after stripping the cable for the connectors.

4.6.24.2 Procedure. The basic measuring system shall be arranged as shown on figure 5. The test frequency range shall be from 2 GHz to the specified upper limit (see 3.1).

4.6.24.2.1 System check.

a. RF bridge directivity shall be checked in accordance with the standing wave ratio/return loss procedure as specified in 4.6.11.

b. Verify the system amplitude accuracy by measuring the RF transmission loss of calibrated attenuators over the specified swept frequency range (see 3.1). The calibrated attenuators shall have nominal values covering the range of anticipated measurement loss values. Their calibration data shall be accurate to the following limits.

Nominal value (dB)	Uncertainty (dB)
Up to 10	.1
Over 10 to 20	.2
Over 20 to 30	.3
Over 30 to 40	.4
Over 40 to 50	.5

System amplitude accuracy shall be 5 percent or better over the specified frequency range (see 3.1).

4.6.24.2.2 Measurement. Successive sweeps over the test frequency range are made with the test system arranged as shown in steps 1 through 6 of figure 5. An X-Y recording displaying RF transmission loss in dB as a function of frequency shall be made at each step.

The length of the applicable long cable measured in step 3 should be such as to have an RF transmission loss of not less than 2 dB at 2 GHz. The physical length shall be measured and recorded. Attenuation of the cable is assumed constant over the length and is calculated as follows:

Attenuation (dB/inch) = RF transmission loss (dB) ÷ Length in inches

Steps 1, 2, 3, and 6 are performed with input to the signal processor from detector 2 through the transmission channel, as follows:

Steps 4 and 5 are performed with input to the signal processor from detector 1 through the reflection channel. RF transmission loss for the connector under test and its mate is calculated from the test sample loss measure in step 6, the physical length of cable in the test sample, and the attenuation of the long cable determined from step 3, as follows:

CONNECTOR PAIR LOSS (dB) = TEST SAMPLE LOSS (dB) - (ATTENUATION (dB/INCH) X SAMPLE CABLE LENGTH IN INCHES

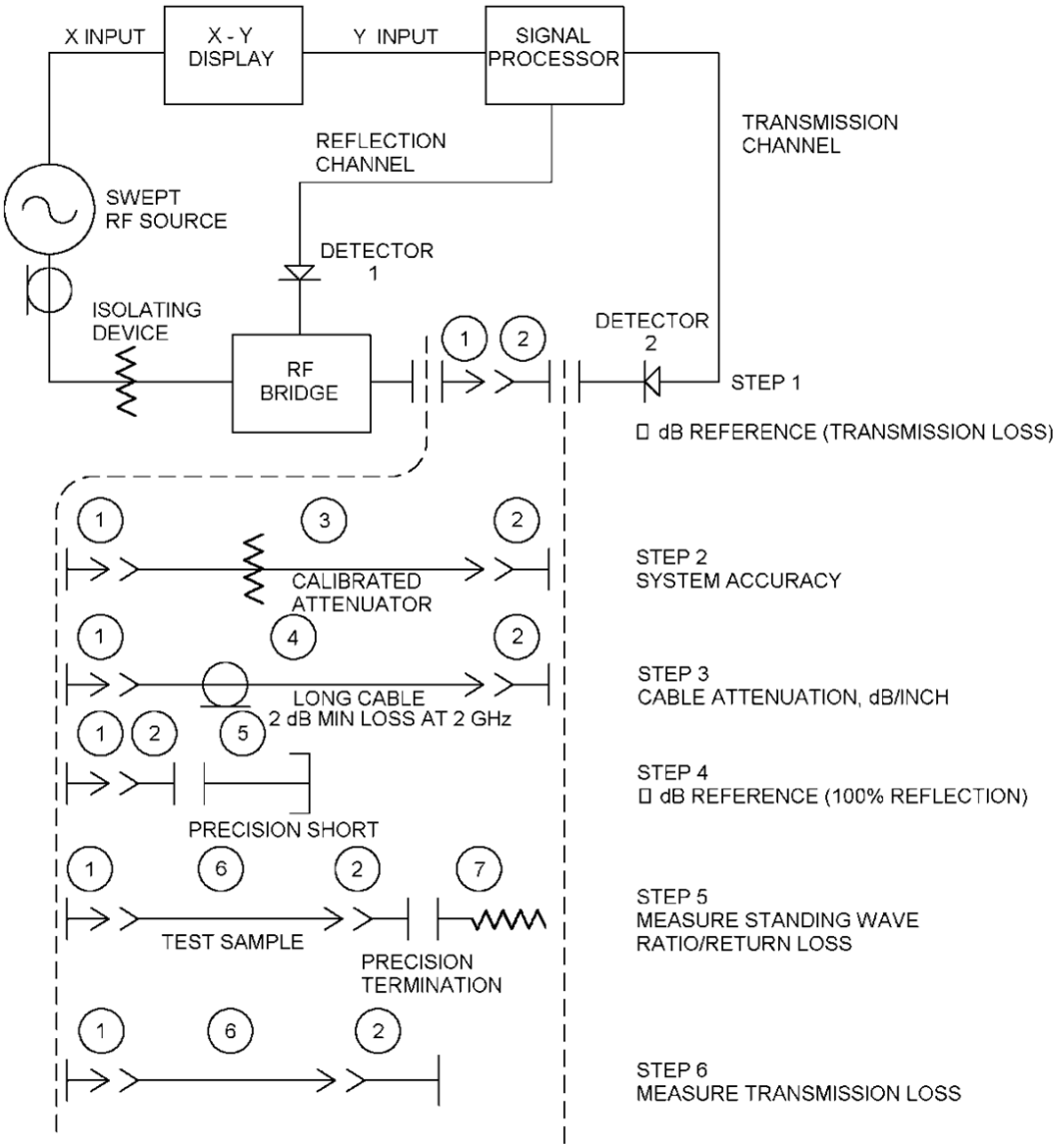

1. STANDARD PRECISION ADAPTER, MAXIMUM SWR (SEE 3.1)
2. STANDARD PRECISION ADAPTER, MAXIMUM SWR (SEE 3.1)
3. CALIBRATED ATTENUATOR (SEE 4.6.24.2.1)
4. LONG CABLE APPLICABLE TO CONNECTOR UNDER TEST (SEE 4.6.24.2.2)
5. PRECISION SHORT
6. TEST SAMPLE (SEE 4.6.24.1)
7. PRECISION TERMINATION, MAXIMUM SWR 1.02 + .004 F (GHz)

FIGURE 5. RF transmission loss measuring system.

4.6.25 Porosity (see 3.28). Contacts shall be placed in containers and covered with nitric acid (specified gravity 1.316 at 15.6°C) at 25°C ± 3°C so that all contacts may be observed during the test. The contacts shall be observed for 30 seconds. This specific gravity only applies to the bubble test.

4.6.26 Solderability (see 3.29). When applicable (see 3.1), the connector component shall be assembled to the standard test cable component using soft solder in accordance with specification J-STD-006, and non corrosive flux type RMA. With the connector component held in a fixed position, the specified tensile force (see 3.1) shall be applied to the cable component in the direction of the cable axis for 30 seconds minimum. Connector to cable outer conductor and inner contact to cable inner conductor solder joints, as applicable, shall be tested separately. These tests should be performed at the end of the group testing.

4.6.27 Safety wire hole pullout (see 3.30). A single strand of safety wire shall be looped through the safety wire hole and secure to itself. Forces of 67 newtons (15 pounds) minimum shall be applied to the safety wire pulling away from the connector. One pull shall be parallel to the connector axis and one pull shall be perpendicular to the connector axis (see figure 6). The safety wire shall be corrosion-resistant steel .020 inch diameter (24 gauge) or .015 inch diameter (27 gauge) in accordance, with NASM20995. This test is to be conducted under static conditions. All holes are to be tested individually.

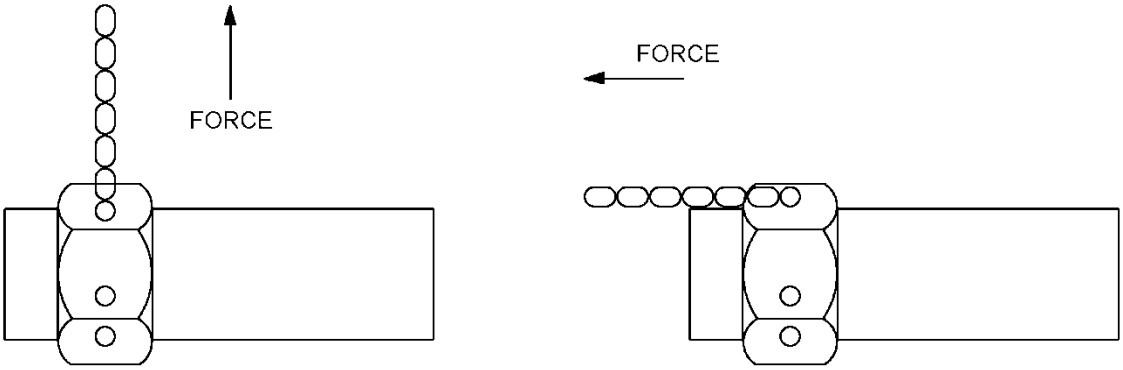

FIGURE 6. Safety wire hole pullout procedure.

4.6.28 Thermal vacuum outgassing (class X) (see 3.31). All nonmetallic materials including lubricants, used in the manufacture of these, connectors shall be tested in accordance with ASTM E595 to determine the TML and VCM of the original specimen mass. For the purpose of determining the TML and VCM of connectors shall be the assembled connector mass excluding metallic parts.

4.6.29 Flammability (see 3.32). When tested in accordance with NHB 8060.1, test 1, material samples shall meet the requirements of 3.32.

4.6.30 Odor (see 3.33). When tested in accordance with NHB 8060.1, test 6, material samples shall meet the requirements of 3.33.

4.6.31 Toxicity (offgassing) (see 3.34). When tested in accordance with NMB 8060.1, test 7, material samples shall meet the requirements of 3.34.

5. PACKAGING

5.1 Packaging requirements. For acquisition purposes, the packaging requirements shall be as specified in the contract or order (see 6.2). When packaging of materiel is to be performed by DoD or in-house contractor personnel, these personnel need to contact the responsible packaging activity to ascertain packaging requirements. Packaging requirements are maintained by the Inventory Control Points packaging activity within the Military Service or Defense Agency, or within the military service's system commands. Packaging date retrieval is available from the managing Military Department's or Defense Agency's automated packaging files, CD-ROM products, or by contacting the responsible packaging activity.

6. NOTES

(This section contains information of a general or explanatory nature that may be helpful, but is not mandatory.)

6.1 Intended use. Connectors and fittings covered by this specification are intended for use in radio frequency applications up to the frequency specified (see 3.1).

6.2 Acquisition requirements. Acquisition documents are to specify the following:

a. Title, number, and date of the specification.

b. Title, number, and date of the applicable specification sheet, and the complete PIN (see 1.1.2 and 3.1).

c. The complete PIN of the connector or fitting ordered.

d. Packaging (see 5.1).

e. Specific finish, when required (see 3.3.1).

f. For category B connectors, the special tools which are to be used in the assembly of the connectors.

6.3 Qualification. With respect to products requiring qualification, awards will be made only for products which are, at the time of award of contract, qualified for inclusion in the applicable Qualified Products List QPL No. 31031 whether or not such products have actually been so listed by that date. The attention of the contractor is called to this requirement, and manufacturers are urged to arrange to have the products that they propose to offer to the Federal Government, tested for qualification, in order that they may be eligible to be awarded contracts or orders for the products covered by this specification. Information pertaining to qualification of products may be obtained from the DLA Land & Maritime (VQ), P.O.Box 3990, Columbus, Ohio 43218-3990 or email at RFConnectors@dscc.dla.mil. An online listing of products qualified to this specification may be found in the Qualified Products Database (QPD) at https://quicksearch.dla.mil.

6.4 Engineering parameters. The parameters of nominal impedance, voltage rating, frequency range, and temperature range will be as specified.

6.5 Subject term (keyword listing).

Copper-beryllium
Nickel
VSWR

6.6 Environmentally preferable material. Environmentally preferable materials should be used to the maximum extent possible to meet the requirements of this specification. As of the dating of this document, the U.S. Environmental Protection Agency (EPA) is focusing efforts on reducing 31 priority chemicals. The list of chemicals and additional information is available on their website at http://www.epa.gov/osw/hazard/wastemin/priority.htm. Included in the list of 31 priority chemicals are cadmium, lead, and mercury. Use of these materials should be minimized or eliminated unless needed to meet the requirements specified herein (see section 3).

6.7 Changes from previous issue. The margins of this specification are marked with vertical lines to indicate where changes from the previous issue were made. This was done as a convenience only and the Government assumes no liability whatsoever for any inaccuracies in these notations. Bidders and contractors are cautioned to evaluate the requirements of this document based on the entire content irrespective of the marginal notations and relationship to the previous issue.

APPENDIX A

ADDITIONAL INFORMATION ON TEST PROCEDURES

A.1 SCOPE

A.1.1 Scope. This appendix is not a mandatory part of the specification. This appendix is provided to the user for additional information in determining the cable to connector combinations available. The information contained herein is intended for guidance only.

A.2 APPLICABLE DOCUMENTS. This section is not applicable to this appendix.

A.3 CABLE GROUPINGS. See notes at end of listing.

Group I.

Cable M17/	Zo	F	Dielectric	Group: I Category: A C
93-RG178	50	3	PTFE	1/
169-00001	50	0.4	PTFE	X

1/ Denotes preferred cable.

Group II.

Cable M17/	Zo	F	Dielectric	Group: II, IIa, IIb Category: A	C	C
119-RG174	50	1	PE	X	X	
103-00001	50	0.4	PE	X	X	
196-00001 1/	50	1	PTFE	X	X	
113-RG316	50	3	PTFE	2/	2/	
172-00001	50	0.4	PTFE	X	X	
94-RG179	75	3	PTFE	X		2/

1/ This cable is intended for low smoke applications.
2/ Denotes preferred cable.

Group III.

Cable M17/	Zo	F	Dielectric	Category: A, C
152-00001	50	12.4	PTFE	1/

1/ Denotes preferred cable.

Group IV.

Cable M17	Zo	F	Dielectric	Group: IV Category: A C D
54-RG122	50	1	PE	2/
157-00001	50	0.4	PE	X
187-00001 1/	50	1	PE	X
198-00001 1/	50	0.4	PE	X

1/ This cable is intended for low smoke applications.
2/ Denotes preferred cable.

APPENDIX A

Group V.

Cable M17/	Zo	F	Dielectric	Group: V Category: A C D
95-RG180	95	3	PTFE	1/

1/ Denotes preferred cable.

Group VI.

Cable M17/	Zo	F	Dielectric	Group: VI Category: A	Via C, D	VIb C, D
28-RG058	50	1	PE	X	X	
155-00001	50	0.4	PE	X	X	
183-00001 1/	50	1	PE	X	X	
197-00001 1/	50	0.4	PE	X	X	
111-RG303	50	3	PTFE	X	2/	
170-00001	50	0.4	PTFE	X	X	
60-RG142	50	12.4	PTFE	X		X
158-00001	50	0.4	PTFE	X		X
84-RG223	50	12.4	PE	X		X
167-00001	50	0.4	PE	X		X
194-00001 1/	50	12.4	PE	X		X
200-00001 1/	50	0.4	PE	X		X
128-RG400	50	12.4	PTFE	2/		2/
175-00001	50	0.4	PTFE	X		X

1/ This cable is intended for low smoke applications.
2/ Denotes preferred cable.

Group VII.

Cable M17/	Zo	F	Dielectric	Group: VII Category: A	VIIA C	VIIB C
29-RG59	75	1	PE	X	X	
184-00001 1/	75	1	PE	X	X	
110-RG302	75	3	PTFE	2/	2/	
30-RG062	93	1	PE	X	X	
185-00001 1/	93	1	PE	X	X	
97-RG210	93	3	PTFE	X	X	
90-RG71	93	1	PE	X		2/
195-00001 1/	93	1	PE	X		X

1/ This cable is intended for low smoke applications.
2/ Denotes preferred cable.

APPENDIX A

Group VIII.

Cable M17/	Zo	F	Dielectric	Group: VIII Category: A C
2-RG6	50	3	PE	X
180-00001 1/	50	3	PE	X
73-RG212	50	11	PE	X
162-00001	50	0.4	PE	X
188-00001 1/	50	11	PE	X
199-00001 1/	50	0.4	PE	X
112-RG304	50	12.4	PTFE	2/
171-00001	50	0.4	PTFE	X

1/ This cable is intended for low smoke applications.
2/ Denotes preferred cable.

Group IX.

Cable M17/	Zo	F	Dielectric	Group: IX Category: A
92-RGI15	50	12.4	PTFE	1/
168-00001	50	0.4	PTFE	X

1/ Denotes preferred cable.

Group X.

Cable M17/	Zo	F	Dielectric	Group: X Category: A	XA C,D	Xb C,D	Xc C	Xd D
6-RG11	75	1	PE	X			X	
181-00001 1/	75	1	PE	X			X	
62-RG144	75	3	PTFE	X			X	
65-RG165	50	3	PTFE	X	2/			
159-00001	50	0.4	PTFE	X	X			
74-RG213	50	1	PE	X	X			
189-00001 1/	50	1	PE	X	X			
163-00001	50	0.4	PE	X	X			
75-RG214	50	11	PE	X		X		
190-00001 1/	50	11	PE	X		X		
164-00001	50	0.4	PE	X		X		
86-00001	50	0.4	PTFE	X		2/		
127-RG393	50	11	PTFE	2/		X		
174-00001	50	0.4	PTFE	X		X		
77-RG216	75	3	PE	X				2/
191-00001 1/	75	3	PE	X				X

1/ This cable is intended for low smoke applications.
2/ Denotes preferred cable.

APPENDIX A

Group XI.

Cable M17/	Zo	F	Dielectric	Group: XI Category: A
74-RG215	50	1	PE	2/
189-00002 1/	50	1	PE	X

1/ This cable is intended for low smoke applications.
2/ Denotes preferred cable.

Group XII.

Cable M17/	Zo	F	Dielectric	Group: XII Category: A C
78-RG217	50	3	PE	2/
165-00001	50	0.4	PE	X
192-00001 1/	50	3	PE	X

1/ This cable is intended for low smoke applications.
2/ Denotes preferred cable.

Group XIII.

Cable M17/	Zo	F	Dielectric	Group: XII Category: A
72-RG211	50	1	PTFE	1/
161-00001	50	0.4	PTFE	X

1/ Denotes preferred cable.

Group XIV.

Cable M17/	Zo	F	Dielectric	Group: XIV Category: A
79-RG218	50	1	PE	2/
166-00001	50	0.4	PE	X
195-00001 1/	50	1	PE	X

1/ This cable is intended for low smoke applications.
2/ Denotes preferred cable.

APPENDIX A

Group XV.

Cable M17/	Zo	F	OD (mm)	Dielectric	Group: Category: X	XI	XII	XIII	XIV
129-RG401	50	18	6.35	PTFE	X				
129-00001	50	18	6.35	PTFE	X				
130-RG402	50	20	3.58	PTFE		X			
130-00001	50	20	3.58	PTFE		X			
130-00002	50	20	3.58	PTFE		X			
130-00003	50	20	3.58	PTFE		X			
130-00004	50	20	3.58	PTFE		X			
130-00005	50	20	3.58	PTFE		X			
130-00006	50	20	3.58	PTFE		X			
130-00007	50	20	3.58	PTFE		X			
133-RG405	50	20	2.18	PTFE			X		
133-00001	50	20	2.18	PTFE			X		
133-00002	50	20	2.18	PTFE			X		
133-00003	50	20	2.18	PTFE			X		
133-00004	50	20	2.18	PTFE			X		
133-00005	50	20	2.18	PTFE			X		
133-00006	50	20	2.18	PTFE			X		
133-00007	50	20	2.18	PTFE			X		
133-00008	50	20	2.18	PTFE			X		
133-00009	50	20	2.18	PTFE			X		
133-00010	50	20	2.18	PTFE			X		
133-00011	50	20	2.18	PTFE			X		
151-00001	50	20	1.19	PTFE				X	
151-00002	50	20	1.19	PTFE				X	
154-00001	50	20	0.86	PTFE					X
154-00002	50	20	0.86	PTFE					X

Inches	mm
.034	0.86
.047	1.19
.086	2.18
.141	3.58
.250	6.35

NOTES:

1. Zo denotes nominal impedance in ohms.
2. F denotes the upper frequency limit in GHz. For cables with 0.4, the structural return loss and the power handling capability are not specified. Attenuation is tested only at 0.4 GHz.
3. PE denotes a polyethylene dielectric. PTFE denotes a polytetrafluoroethylene dielectric.
4. Dimensions are in millimeters. Inch-pound equivalents are given for information only.

CONCLUDING MATERIAL

Custodians:
Army – CR
Navy – EC
Air Force – 85
NASA – NA
DLA – CC

Review activities:
Army – AR, AT, MI
Navy – AS, MC, OS, SH
Air Force – 19, 99

Preparing activity:
DLA – CC

(Project 5935-2014-103)

NOTE: The activities listed above were interested in this document as of the date of this document. Since organizations and responsibilities can change, you should verify the currency of the information above using the ASSIST Online database at https://assist.dla.mil.