INCH-POUND

MIL-PRF-28776F
20 August 2014
SUPERSEDING
MIL-PRF-28776E
10 September 2012

PERFORMANCE SPECIFICATION

RELAYS, HYBRID, ESTABLISHED RELIABILITY, GENERAL SPECIFICATION FOR

This specification is approved for use by all Departments and Agencies of the Department of Defense.

1. SCOPE

1.1 Scope. This specification establishes the general requirements for relays that use a combination of solid state circuit input elements functioning with an electro-mechanical relay that performs the switching functions associated with control system applications (see 6.1). These relays are designed to operate in low and medium power switching circuits with contact ratings up to 1 ampere alternating current (ac) or direct current (dc). The failure rate level is established at a confidence level of 90 percent for qualification and 60 percent for maintenance of qualification based on 100,000 cycles at +125°C under rated load conditions specified herein. Excludes time delay relays. CAUTION: The use of any coil voltage less than the rated coil voltage will compromise the operation of the relay. CAUTION: Pick-up, hold, and dropout voltages are for test purposes only and are not to be used as design criteria. For additional application and caution information, see 6.1.

1.2 Part or Identifying Number (PIN). The PIN consists of the letter "M", the basic number of the specification sheet, an assigned dash number (see 3.1), and a suffix letter designating failure rate level (see table I) as shown in the following example:

M	28776	-001	L
M prefix designator	Specification sheet numb	Dash number	Failure rate level

1.3 Failure rate (FR) level designation. The failure rate level designation is shown in table I (see 4.6).

TABLE I. Failure rate level designation.

Failure rate level designation	Failure rate level (percent per 10,000 cycles)
L	3.0
M	1.0
P	0.1
R	0.01

Comments, suggestions or questions on this document should be addressed to DLA Land and Maritime, ATTN: VAT, Post Office Box 3990, Columbus, OH 43218-3990, or emailed to mailto:Relay@dla.mil. Since contact information can change, you may want to verify the currency of this address information using the ASSIST Online database at https://assist.dla.mil.

AMSC N/A FSC 5945

2. APPLICABLE DOCUMENTS

2.1 General. The documents listed in this section are specified in sections 3 and 4 of this specification. This section does not include documents cited in other sections of this specification or recommended for additional information or as examples. While every effort has been made to ensure the completeness of this list, document users are cautioned that they must meet all specified requirements of documents cited in sections 3 and 4 of this specification, whether or not they are listed.

2.2 Government documents.

2.2.1 Specifications, standards, and handbooks. The following specifications, standards, and handbooks form a part of this document to the extent specified herein. Unless otherwise specified, the issues of these documents are those cited in the solicitation or contract.

DEPARTMENT OF DEFENSE SPECIFICATIONS

(See supplement 1 for list of associated specifications.)

DEPARTMENT OF DEFENSE STANDARDS

MIL-STD-202 - Electronic and Electrical Component Parts.
MIL-STD-690 - Failure Rate Sampling Plans and Procedures.
MIL-STD-750-1 - Environmental Test Methods for Semiconductor Devices Part 1: Test Methods 1000 through 1999.
MIL-STD-790 - Established Reliability and High Reliability Qualified Products List (QPL) Systems for Electrical, Electronic and Fiber Optic Parts Specifications.
MIL-STD-883 - Microcircuits.
MIL-STD-1276 - Leads for Electronic Component Parts.
MIL-STD-1285 - Marking of Electrical and Electronic Parts.
MIL-STD-1686 - Electrostatic Discharge Control Program for Protection of Electrical and Electronic Parts. Assemblies and Equipment (Excluding Electrically Initiated Explosive Devices).

DEPARTMENT OF DEFENSE HANDBOOKS

MIL-HDBK-263 - Electrostatic Discharge Control Handbook for Protection of Electrical and Electronic Parts, Assemblies and Equipment (Excluding Electrically Initiated Explosive Devices) (Metric).
MIL-HDBK-338 - Electronic Reliability Design.

(Copies of these documents are available online at http://quicksearch.dla.mil.)

2.3 Non-Government publications. The following documents form a part of this document to the extent specified herein. Unless otherwise specified, the issues of these documents are those cited in the solicitation or contract.

AMERICAN SOCIETY FOR TESTING AND MATERIALS (ASTM)

ASTM B488 - Electrodeposited Coatings of Gold for Engineering Uses.

(Copies of this document are available from www.astm.org.)

INSTITUTE OF ELECTRICAL AND ELECTRONICS ENGINEERS

IEEE 315 - Graphic Symbols for Electric and Electronic Diagrams (Including Reference Designation Letters).

(Copies of this document are available from www.ieee.org.)

TECHAMERICA

EIA-557 - Statistical Process Control Systems.

(Copies of this document are available from www.techamerica.org.)

2.4 Order of precedence. Unless otherwise noted herein or in the contract, in the event of a conflict between the text of this document and the references cited herein (except for related specification sheets), the text of this document takes precedence. Nothing in this document, however, supersedes applicable laws and regulations unless a specific exemption has been obtained.

3. REQUIREMENTS

3.1 Specification sheets. The individual item requirements shall be as specified herein and in accordance with the applicable specification sheet. In the event of any conflict between requirements of this specification and the specification sheet, the latter shall govern.

3.2 Qualification. Relays furnished under this specification shall be products which are authorized by the qualifying activity for listing on the applicable qualified products list (QPL) at the time of award of contract (see 4.4 and 6.3).

3.3 Reliability and Statistical process control (SPC).

3.3.1 Reliability. Reliability of relays furnished under this specification shall be established and maintained in accordance with the requirements and procedures specified in MIL-STD-790 and MIL-STD-690 with details and exceptions specified in 4.2, 4.4.4, and 4.5.

3.3.2 Statistical process control (SPC). The contractor shall implement and use SPC techniques in the manufacturing process for parts covered by this specification. The SPC program shall be developed and maintained in accordance with EIA-557. The SPC program shall be documented and maintained as part of the overall reliability assurance program as specified in MIL-STD-790.

3.4 Materials. Materials shall be as specified herein. However, when a definite material is not specified, a material shall be used which will enable the relays to meet the performance requirements of this specification. Materials used externally shall be fungus inert, self-extinguishing, and shall not support combustion, nor give off noxious gases in harmful quantities. Materials used internally shall not give off gases in quantities sufficient to cause explosion of sealed enclosures, cause contamination of the contacts or other parts of the relay that will adversely affect life or reliability, or form current-carrying tracks when subjected to any of the tests specified herein. Cotton-filled or wood-flour-filled materials shall not be used. Ceramic used for external surfaces shall be glazed. The use of silicone (see 6.10) or silicone compounds for any purpose is prohibited. The selection of materials shall be such as to provide maximum shelf life. Acceptance or approval of any constituent material shall not be construed as a guaranty of the acceptance of the finished product.

3.4.1 Metals and plating. Metals shall be of a corrosion-resistant type or shall be plated or treated to resist corrosion.

a. Use of pure tin, plating or otherwise, is prohibited internally and externally (see 6.7.1). Use of tin-lead finishes are acceptable provided that the minimum lead content is 3 percent.

b. Use of zinc plating is prohibited internally and externally.

c. Use of cadmium plating is prohibited internally and externally.

d. The use of mercury or mercury compounds is prohibited.

e. The use of magnesium or magnesium alloys is prohibited (not applicable to contacts).

3.4.1.1 Dissimilar metals. When dissimilar metals are used in intimate contact with each other, protection against electrolysis and corrosion shall be provided. The use of dissimilar metals in contact, which tends toward active electrolytic corrosion (particularly brass, copper, or steel used in contact with aluminum or aluminum alloy), is not acceptable. However, metal spraying or metal plating of dissimilar base metals to provide similar or suitable abutting surfaces is permitted. Dissimilar metals should be as defined in 6.7. In hermetic seals, the 0.25 volt difference between the header material and the housing material is not applicable.

3.4.2 Magnet wire. Magnet wire used shall enable the relay to meet the performance requirements of this specification.

3.5 Interface and construction requirements. Relays shall meet the interface and construction requirements as specified such as weight and physical dimensions (see 3.1).

3.5.1 Case. Unless otherwise specified (see 3.1), the case shall not be electrically connected to the contacts or coil; however, it may be used as part of the magnetic circuit.

3.5.1.1 Case grounding. When specified (see 3.1), means for connecting the relay case to ground shall be provided.

3.5.2 Sealing process. Relays shall be dried, degassed, and backfilled with an atmosphere and sealed by welding such that the requirements of this specification are met. Adjunct sealant (see 6.10), if used, must comply with the following characteristics:

a. Shall not extend above 20 percent of the length of the exposed terminals above the glass meniscus.

b. Trace color is permitted if it is a natural result of the sealant process.

c. Shall form, after curing, a permanent nonconductive, noncracking seal under all relay environments.

3.5.3 Contacts. Contacts shall have load ratings and arrangements (see MIL-STD-1285) as specified (see 3.1) and unless otherwise specified (see 3.1), shall be capable of carrying the maximum rated current continuously as well as making and breaking the specified current under all environmental conditions specified herein.

3.5.4 Coils. Coils shall be adequately insulated electrically from the contacts and the case. The resistance and rated voltage (or current) shall be as specified (see 3.1). Unless otherwise specified (see 3.1), coils shall be designed for continuous operation at maximum rated voltage and temperature.

3.5.4.1 Terminal identification. When specified (see 3.1), a bead of contrasting color shall be used to designate the X1 (positive, if applicable) terminal (see figure 1 and MIL-STD-1285).

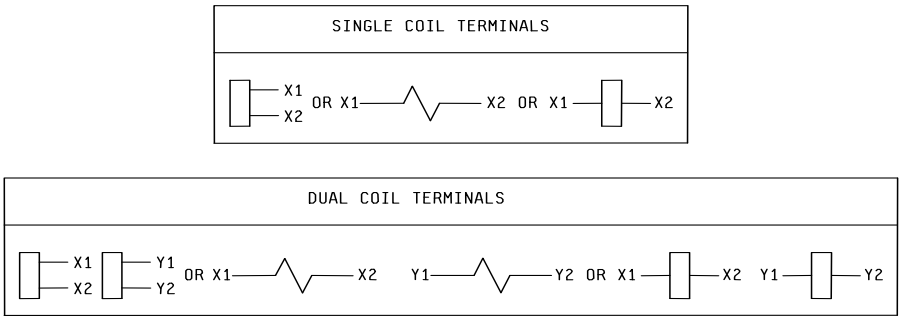

FIGURE 1. Symbols and marking for terminals.

3.5.5 Circuit diagram. The circuit diagram, as specified (see 3.1), shall be a terminal view. Circuit symbols shall be in accordance with IEEE-315. For relays without an orientation tab, the circuit diagram, as specified (see 3.1), shall be orientated so that when the relay is held with the circuit diagram right side up as shown (see 3.1), and rotated away from the viewer about a horizontal axis through the diagram until the header terminals face the viewer, then each terminal shall be in the location shown in the circuit diagram.

3.5.6 Mounting means (see 3.1).

3.5.6.1 Bracket. Mounting brackets shall be an integral part of the relay, securely attached thereto in a manner to prevent any movement between the relay and the mounting bracket.

3.5.7 Terminals (see 3.1). Terminals shall be as specified herein. Manufacturer may supply hot solder dipped terminals provided that the hot solder dipping process has been approved by the qualifying activity and when specified on the individual purchase order (see 6.2.1a). Solder dipped terminals may be .002 inch (0.051 mm) larger than the maximum dimension specified (see 3.1).

3.5.7.1 Solder-lug terminals. Solder-lug terminals shall be designed to accommodate two conductors, each rated to carry the maximum rated current of the contact or coil terminated.

3.5.7.2 Wire leads. Wire leads shall be as specified (see 3.1). Optional, shortened wire leads may be supplied when specified on the individual purchase order (see 3.1 and 6.2.1b).

3.5.7.2.1 Wire leads, solder pin (SP). Solder pin wire leads shall be as specified (see 3.1).

3.5.7.3 Plug-in termination. Plug-in terminations shall conform to the arrangements or dimensions as specified (see 3.1). The mounting arrangement of the relay shall be so designed that the entire weight of the relay will be suspended and the stability of its mounting will be provided by an auxiliary mounting means other than the electrical terminals of a socket (see 3.1). Plug-in pin terminals shall provide the operational, environmental, and interface characteristics to provide a reliable interconnect to gold-plated contacts. One system for gold plating that may be used is ASTM B488, type 3, class 1.25, knoop hardness 130 to 240, with nickel underplate 50 to 150 microinches thick. The gold plating system shall enable the product to meet the performance requirements of this specification and shall be approved by the qualifying activity.

3.5.7.4 Solder dip (retinning) leads. The manufacturer may solder dip/retin the leads of product supplied to this specification provided the solder dip process has been approved by the qualifying activity.

3.5.7.4.1 Qualifying activity approval. Approval of the solder dip process will be based on one of the following options (Note: Solder dip of gold-plated plug-in leads is not allowed.) All visual examination criteria shall be in accordance with method 208 of MIL-STD-202:

a. When the original lead finish qualified was hot solder dip lead finish 52 of MIL-STD-1276 (The 200-microinch thickness is not applicable). The manufacturer shall use the same solder dip process for retinning as is used in the original manufacture of the product.

b. When the lead originally qualified was not hot solder dip lead finish 52 as prescribed above, approval for the process to be used for solder dip shall be based on the following test procedure:

(1) Six samples for each style and lead finish are subjected to the manufacturer's solder dip process. Following the solder dip process, the relays shall be subjected to groups A2 and A4.

(2) Three of the six samples are then subjected to the solderability test (see 3.8). No visual defects are allowed.

(3) Remaining three samples are subjected to the resistance to solder heat test (see 3.20).

(4) All six samples shall be subjected to groups A2 and A4 inspections. Minor scratching of the terminals due to insertion into test sockets shall not be cause for rejection.

3.5.7.4.2 Solder dip/retinning options. The manufacturer may solder dip/retin as follows:

a. After the 100 percent A1 screening test but before the A2 electrical tests.

b. As a corrective action, if the lot fails the A3 solderability test. Following the solder dip/retinning process of paragraph 4.7.2.2.2.2, as a minimum, insulation resistance (all terminals to case) shall be tested, and the A4 tests shall be performed, as applicable.

c. For relays that have been subjected to and passed group A inspections. Following the solder dip/retinning process, as a minimum, the insulation resistance (all terminals to case) shall be tested, and the solder coating coverage and workmanship shall be visually examined. Minor scratching of the terminals due to insertion into test sockets shall not be cause for rejection.

3.5.8 Diodes. Relays supplied with diodes installed internally are not considered electrostatic discharge (ESD) sensitive. However, the diode may be ESD sensitive when not part of the coil circuit or wired internal to the coil. In such case, the diode shall be processed in accordance with the requirements specified in 4.2.3. Manufacturers may, at their option, test diodes used internally as specified in method 3015 of MIL-STD-883 modified to 16,000 volts to eliminate the need for the ESDS protection program described above.

3.6 In-process inspection (see 4.7.1).

3.6.1 Solid state devices and diode in-process screening (see 4.7.1.1). Perform in-process screening as specified in 4.7.1.1.

3.7 Screening (see 4.8.2). The contact miss detectors monitoring level shall be less than 100 ohms for relays tested during cycling. Unless otherwise specified (see 3.1), any relay shall have a final insulation resistance measurement of 10,000 megohms or greater.

3.8 Solderability (see 4.8.3). The critical (examination) area of solid wire lead and pin terminals shall be at least 95 percent covered with a continuous new solder coating in accordance with method 208 of MIL-STD-202. For solder-lug terminals greater than .045 inch (1.14 mm) in diameter, 95 percent of the total length of fillet, which is between the standard wrap wire and the terminal, shall be tangent to the surface of the terminal being tested, and shall be free of pinholes and voids. A ragged or interrupted line at the point of tangency between the fillet and the terminal under test shall be considered a failure.

3.9 Seal (see 4.8.4). The standard leak rate (L value in Eq (1) of MIL-STD-883 Method 1014) shall be 1×10^{-6} atm cm^3/s of air.

3.10 Insulation resistance (see 4.8.5). Unless otherwise specified (see 3.1), the insulation resistance shall be 10,000 megohms or more. After the high level life tests, the insulation resistance shall be 1,000 megohms or more.

3.11 Dielectric withstanding voltage (see 4.8.6). There shall be no leakage current in excess of 100 microamperes (µA). After high level life tests, the dielectric withstanding voltage measured at atmospheric or reduced barometric pressure shall be at least 75 percent of the initial value (3.1).

3.12 Electrical characteristics (see 4.8.7). The following tests as specified in 3.12.1 through 3.12.8 shall comprise the electrical characteristics tests. Unless otherwise specified, electrical characteristics shall be 100 percent inspected and performed in the order as shown below.

3.12.1 Static contact resistance or contact voltage drop (see 4.8.7.1). Unless otherwise specified (see 3.1), the static contact resistance shall not exceed 0.05 ohm or contact voltage drop as specified (see 3.1).

3.12.2 Specified pickup, hold, and dropout values (voltages), control signal on (see 4.8.7.2). The specified pickup, hold, and dropout values (voltages) shall be as specified (see 3.1).

3.12.3 Coil current and coil resistance (see 4.8.7.3).

3.12.3.1 Coil current (see 4.8.7.3.1). The coil current shall be as specified (see 3.1).

3.12.3.2 Coil resistance (see 4.8.7.3.2). Coil resistance of hybrid relays is not directly measurable at the relay terminal due to resistance of drivers.

3.12.4 Turn-on (voltage or current) (coil supply voltage on) (see 4.8.7.4). 1/ The turn-on voltage shall be as specified (see 3.1).

3.12.5 Turn-off voltage (coil supply voltage on) (see 4.8.7.5). The turn-off voltage shall be as specified (see 3.1).

3.12.6 Turn-on time and turn-off time (see 4.8.7.6). The turn-on time and turn-off time shall be as specified (see 3.1). In multipole relays, during each of the turn-on and the turn-off time measurements, the difference between the first moving contact to make and the last moving contact to make shall not exceed 1 millisecond (ms).

3.12.6.1 Break before make (see 4.8.7.6.1). Moving contacts within a multipole relay shall show no evidence of any open contact closing before all closed contacts have opened (see 3.1). This applies to either state of the relay.

3.12.7 Contact dynamic characteristics (see 4.8.7.7).

3.12.7.1 Contact bounce (applicable to failure rate level "L") (see 4.8.7.7.1). Unless otherwise specified (see 3.1), the duration of the contact bounce shall not exceed 1.5 ms.

3.12.7.2 Contact stabilization time (applicable to failure rate levels "M", "P", and "R") (see 4.8.7.7.2). Unless otherwise specified (see 3.1), the time to reach and maintain a static contact resistance state shall not exceed 2.0 ms.

1/ Wherever "voltage" is used herein, it is considered to include "current" if applicable.

3.12.8 Coil transient suppression (applicable to dc operated relays with coil transient suppression diodes) (see 4.8.7.8). Coils of dc operated relays shall not generate a back EMF greater than that specified (see 3.1).

3.13 Thermal shock (see 4.8.8). Insulation resistance, turn-on and turn-off voltages or currents, and turn-on and turn-off times shall meet the requirements of 3.10, 3.12.4, and 3.12.6, respectively, at each temperature extreme. Following the temperature excursions, there shall be no cracking, peeling, or flaking of the finish; dielectric withstanding voltage shall meet the requirements of 3.11.

3.14 Shock (specified pulse) (see 4.8.9). Unless otherwise specified (see 3.1), there shall be no opening of closed contacts in excess of 10 microseconds (µs) and there shall be no closure or bridging of open contacts in excess of 1 µs and no evidence of mechanical or electrical damage.

3.15 Vibration (see 4.8.10). Unless otherwise specified (see 3.1), there shall be no opening of closed contacts in excess of 10 µs and there shall be no closure or bridging of open contacts in excess of 1 µs and no evidence of mechanical or electrical damage.

3.16 Acceleration (unless otherwise specified, see 3.1) (see 4.8.11). The contacts of the relay shall remain in the de-energized position with no control signal applied and in the energized position when control signal is applied.

3.17 Terminal strength (see 4.8.12). There shall be no evidence of loosening or breaking of the terminals, nor shall there be any other damage which would adversely affect the normal operation of the relay. Bending of terminals shall not be construed as damage. The glass criteria of 3.29 does not apply here.

3.18 Magnetic interference (when specified, see 3.1) (see 4.8.13). The specified pickup, hold, dropout, and turn-on and turn-off values (voltages) shall meet the requirements specified in 3.12.2, 3.12.4, and 3.12.5.

3.19 Coil life (see 4.8.14). There shall be no evidence of damage. The manufacturer shall notify the qualifying activity when changes to the coil design or manufacture occur. The Qualifying Activity reserves the right to invoke the coil life test prior to shipment of product as part of this requirement.

3.19.1 Coil endurance (see 4.8.14.1). The coil resistance shall be as specified (see 3.1).

3.20 Resistance to soldering heat (see 4.8.15). There shall be no damage which would adversely affect normal operation of the relay.

3.21 Salt spray or atmosphere (corrosion) (see 4.8.16). There shall be no evidence of breaking, cracking, chipping, or flaking of the finish, nor exposure of the base metal, due to corrosion, which would adversely affect the application or performance characteristics of the relay.

3.22 Overload (applicable to high level relays only) (see 4.8.17). The voltage drop across closed contacts shall be less than or equal to 5 percent of the applied load voltage and the voltage across open contacts shall be 95 percent or more of the applied load voltage. The case-to-ground fuse shall remain electrically continuous.

3.23 Life (see 4.8.18). Unless otherwise specified (see 3.1), for low level testing, the contact miss detector's monitoring level shall be less than or equal to 100 ohms. For high level testing, the contact miss detector's monitoring level shall be less than or equal to 5 percent of the applied load voltage and the voltage across open contacts shall be 95 percent or more of the applied load voltage. Unless otherwise specified, the static contact resistance following cycling shall be no greater than twice the initial specified contact resistance requirement. There shall be no mechanical or electrical failure. Welding of contacts, failure to make, carry or break the load, or failure of the fuse connected between case and load system ground or neutral shall constitute a failure. Relays indicating failure, not verified per a failures verification procedure approved by the qualifying activity, may be returned to test. During post life tests, failure of a diode, transistor, or FET coil driver shall constitute a failure.

3.24 Intermediate current (see 4.8.19). During cycling, unless otherwise specified (see 3.1), the resistance of a closed contact shall be less than or equal to 3 ohms and the voltage across an open contact shall be 95 percent or more of applied load voltage. After cycling, the static contact resistance shall be measured at room ambient (+25°C) and shall not exceed the limits as specified (see 3.1). Intermediate current shall not be considered a low level or high level contact load rating (see 6.1.1). There shall be no mechanical or electrical failure. Welding of contacts, failure to make, carry or break the load, or failure of the fuse connected between case and load system ground or neutral shall constitute a failure. Relays indicating failure, not verified per a failures verification procedure approved by the qualifying activity, may be returned to test. During post life tests, failure of a diode, transistor, or FET coil driver shall constitute a failure.

3.25 Mechanical life (see 4.8.20). After cycling, the insulation resistance and dielectric withstanding voltage shall not exceed the limits as specified (see 3.1) and the turn-on and turn-off time shall not exceed 120 percent of the limits specified (see 3.1). There shall be no mechanical or electrical failure during or following cycling. Failure of the fuse connected between case and load system ground or neutral shall constitute a failure. For relays with semiconductor devices, failure of a diode, transistor, or FET coil driver shall constitute a failure. The manufacturer's test system shall have the means to ensure that the required number of test cycles have been performed.

3.26 Resistance to solvents (see 4.8.21). The marking shall remain legible.

3.27 Voltage transients (4.8.22). There shall be no opening of closed contacts in excess of 10 µs nor closing of open contacts in excess of 10 µs.

3.28 Marking.

3.28.1 JAN and J marking. The United States Government has adopted, and is exercising legitimate control over the certification marks "JAN" and "J", respectively, to indicate that items so marked or identified are manufactured to, and meet all the requirements of specifications. Accordingly, items acquired to and meeting all of the criteria specified herein and in applicable specification, shall bear the certification mark "JAN" except that items too small to bear the certification mark "JAN" shall bear the letter "J". The "JAN" or "J" shall be placed immediately before the part number except that if such location would place a hardship on the manufacturer in connection with such marking, the "JAN" or "J" may be located on the first line above or below the part number. Items furnished under contracts or orders which either permit or require deviation from the conditions or requirements specified herein or in applicable specifications shall not bear "JAN" or "J". In the event an item fails to meet the requirements of this specification and the applicable specification sheets or associated specifications, the manufacturer shall remove completely the military part number and the "JAN" or the "J" from the sample tested and also from all items represented by the sample. The "JAN" or "J" certification mark shall not be used on products acquired to contractor drawings or specifications. The United States Government has obtained Certificate of Registration Number 504,860 for the certification mark "JAN" and Registration Number 2,577,735 for the certification mark "J".

3.28.2 Identification marking (full). Relays shall be marked in accordance with method I of MIL-STD-1285 and shall include the following information:

a. Military PIN (see 1.2 and 3.1). The "JAN" or "J" shall not be marked in front of the PIN.

b. "JAN" or "J" brand. The "JAN" or "J" shall appear directly above or below the "M" of the military PIN (examples: JAN M28776/6-001L)
M28776/6-001L or J

c. Date code (at the option of the manufacturer, the "J" with the date code may be used instead of b). The date code shall provide traceability (see 4.2.2).

d. Source code.

e. Lot symbol (optional).

f. Rated coil voltage (or current) (see 3.1) and when applicable, operating frequency.

g. Coil current.

h. Contact rating (the highest dc resistive load rating shall be marked) (see 3.1).

i. Circuit diagram (see 3.5.5).

j. Terminal marking (when applicable, see 3.1, 3.5.4.1, and 3.5.7).

3.28.3 Minimum marking (when specified, see 3.1). When space does not permit the marking specified in 3.28.2, the marking shall include, as a minimum the military PIN; the "J" with the date code (example J8230); circuit diagram; and manufacturer's name or source code.

3.28.4 Failure rate level substitution. With acquiring activity approval, relays qualified to lower (better) failure rates, may be substituted for higher failure rate parts. For example, a relay qualified to failure rate level "P" (0.1 percent/10,000 cycles), may be substituted for a failure rate "M" (1.0 percent/10,000 cycles), relay. Unless specified in the contract or purchase order, relays shall not be remarked.

3.28.5 Interchangeability. All parts having the same military PIN shall be directly and completely interchangeable with each other with respect to installation and performance to the extent specified in the military specification sheet (see 3.1).

3.29 Header glass. Header glass may have small irregularities, such as bubbles, chips, and cracks. The acceptability shall be based on figure 2 and the following:

a. Surface blisters whose diameters do not exceed one-half of the radial distance between the terminal and the corresponding header metal (for a cluster of blisters, the overall cluster diameter shall apply) are acceptable.

b. Circumferential cracks which originate and terminate in the glass and which extend less than 135° are acceptable (see figure 2, reference B).

c. Radial cracks with lengths not exceeding three-quarters of the distance between the terminal and the surrounding header metal are acceptable (see figure 2, reference C).

d. Tangential cracks which are confined to a single zone are acceptable (see figure 2, reference D).

e. Meniscus cracks, and chipouts, which completely surround the terminal are acceptable if:

(1) The meniscus cracks, and chipouts do not extend beyond one-half the distance from the terminal to the surrounding header metal, or

(2) The meniscus cracks, and chipouts do not extend beyond one-quarter of the distance from the terminal to the surrounding header metal and a portion of the meniscus cracks, and chipouts does not extend beyond three-quarters of the distance from the terminal to the surrounding header metal if that portion of the meniscus cracks, and chipouts does not span more the 180° (see figure 2, reference E).

f. An internal bubble whose diameter does not exceed one-third the distance between the terminal and the surrounding header metal is acceptable.

Microscopic examination with up to 10X magnification shall be used. In case of dispute, all relays shall meet the applicable insulation resistance, dielectric withstanding voltage, and seal requirements, regardless of the acceptability of the header glass.

The above requirements are not applicable after group B and group C inspections and also not applicable to relays with spreader pads after forming the leads.

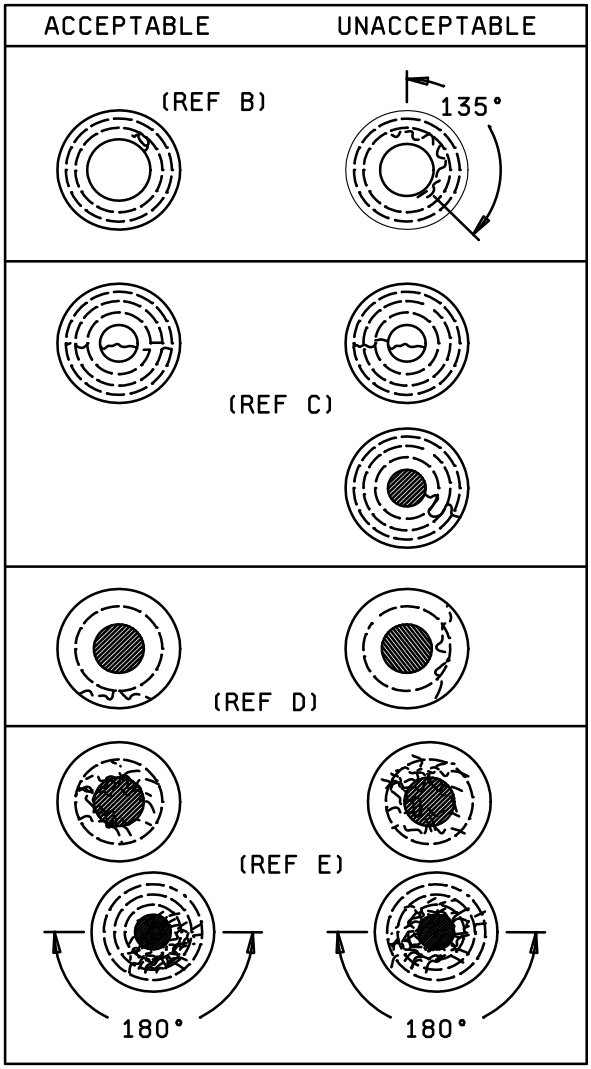

NOTE: The broken lines indicate the division of the radial distance between the terminal and the surrounding header metal into equal parts, thus creating concentric zones around the terminal.

FIGURE 2. Inspection aid.

3.30 Recycled, recovered, environmentally preferable, or biobased materials. Recycles, recovered, environmentally preferable, or biobased materials should be used to the maximum extent possible, provided that the material meets or exceeds the operational and maintenance requirements, and promotes economically advantageous life cycle costs.

3.31 Pure tin. The use of pure tin, as an underplate or final finish, is prohibited both internally and externally. Tin content of (product) and solder shall not exceed 97 percent, by mass. Tin shall be alloyed with a minimum of 3 percent lead, by mass (see 6.4).

3.32 Workmanship. The relays shall be fabricated in such a manner as to be uniform in quality, and shall be free from cracked or displaced parts, sharp edges, burrs, and other defects that will affect life, serviceability, and appearance.

4. VERIFICATION

4.1 Classification of inspections. The inspections requirements specified herein are classified as follows:

a. Qualification inspection (see 4.4).

b. Verification of qualification (see 4.5).

c. In-process and conformance inspection (see 4.7).

4.2 QPL system. The manufacturer shall establish and maintain a QPL system as described in 3.3. Evidence of such compliance shall be verified by the qualifying activity of this specification as a prerequisite for the qualification and retention of qualification.

4.2.1 Statistical Process Control (SPC). The manufacturer shall establish and maintain a SPC system as described in 3.3.2. Evidence of such compliance shall be verified by the qualifying activity as a prerequisite for the qualification and retention of qualification.

4.2.2 Traceability requirements. The manufacturer shall establish and maintain a procedure whereby lot date codes incorporate traceability. This procedure shall be approved by the qualifying activity. The following list is the minimum required raw material/component parts and subassemblies for which traceability is applicable.

a. Header-contact subassembly with the lot number.

(1) Stationary or moving contact (a contact may consist of an individual wire or a contact blade and contact button).

(2) Header with glass to metal sealed leads in place with the lot number.

(3) Return spring(s).

(4) Diodes, transistors, and FETs (as applicable) with the lot number.

b. Motor subassembly with the lot number.

(1) Wound coils with the lot number.

(2) Armature assembly.

(3) Diodes, transistors, and FETs (as applicable) with the lot number.

4.2.3 ESDS protection program. This requirement is applicable to all manufacturers who handle ESDS component parts and materials in the relay manufacturing or testing process. The manufacturer shall establish and maintain an ESD control program in accordance with MIL-STD-1686. The manufacturer should establish and maintain an ESD control program in accordance with and MIL-HDBK-263. Evidence of such compliance shall be verified by the qualifying activity of this specification as a prerequisite for qualification and continued qualification. As a minimum, this system must address the identification of ESDS sub-components and end items, facilities, training, design protection, handling procedures, marking, cleaning, preservation, packaging, and quality assurance. A model ESD control program is available from the qualifying activity and may be used as a guideline document.

4.3 Inspection conditions. Unless otherwise specified herein, the test conditions specified in the "GENERAL REQUIREMENTS" of MIL-STD-202 shall be considered for reference purposes only. All inspections may be performed at ambient conditions consistent with industry practice.

4.3.1 Power supply. Unless otherwise specified herein, the power supply shall have no more than 10 percent regulation at 110 percent of the specified test load current. A dc power supply shall have no more than 5 percent ripple voltage. An ac power supply shall be within 1 percent of the specified frequency and shall be sinusoidal with a form factor between 0.95 and 1.25.

4.3.2 Grounding. Unless otherwise specified (see 3.1), the negative side of the dc power supply shall be grounded. One side of single-phase ac power supply shall be grounded.

4.3.3 Load conditions during tests. The coil of the relay being tested shall be connected to a power supply separate from the load power supply. The loads of the relay being tested shall be connected individually to each stationary contact. The polarity of the load power supply is optional. The movable contacts of the relay being tested may be connected to either the high or low side of the load power supply. All tests during which the contacts are loaded and being cycled, except dielectric withstanding voltage, shall be conducted with the case of the relay connected to the power supply ground or neutral through a normal blow fuse rated at 5 percent of the contact load maximum, but not less than 0.100 ampere. For relays with nongrounded case ratings, tests for isolated-case ratings may be made with the case electrically isolated from the power supply ground.

4.3.4 Input conditions during test. Unless otherwise specified, the relay is turned on when rated coil supply voltage and control signal voltage is applied. The relay is turned off when rated coil supply voltage is applied but the control signal voltage is turned off.

4.3.5 Testing devices. Unless otherwise specified herein, devices used in the testing of relays shall not load the contacts above 10 mA resistive at 6 V dc or peak ac maximum open circuit.

4.3.6 Mounting relays for ambient temperature tests. When the relays are subjected to the tests specified in 4.8.19 and 4.8.14 (intermediate current and coil life, respectively), they may be mounted on a heat sink in accordance with the following:

a. Each relay may be attached by its normal mounting means to a .062 inch (1.57 mm) thick minimum, flat aluminum plate heat sink. The heat sink shall be designed to place every relay in the center of its own square space whose total surface area (both sides) is eight times the outside surface area of the relay, excluding mounting. Relays without mounts shall be held to the heat sink with a metal strap .25 inch (6.35 mm) wide by .015 inch (0.38 mm) maximum thickness. The heat sink assembly shall be suspended by twine or other nonheat conducting material. The leads shall not constitute a heat sink.

b. Chamber temperature shall be controlled to maintain the temperature at the specified ambient extremes (see 3.1).

4.3.7 Methods of examination and test. Application of coil power to relays under test shall be such that plus polarity is applied to the color coded terminal when applicable; or to the lower numbered terminal when color coding is not used.

4.3.8 Reliability requirements. The reliability requirements specified herein are in accordance with MIL-STD-690. The confidence level for qualification is 90 percent and the confidence level for maintenance of qualification is 60 percent.

4.3.9 Tolerances. Unless otherwise specified (see 3.1), all electrical, environmental, and mechanical parameters shall have a tolerance of ±10 percent.

4.3.10 Alternate test equipment. Test circuits and test equipment herein are intended to provide guidance to the relay manufacturer. Use of any alternate test circuits or test equipment shall be approved by the qualifying activity prior to use.

4.4 Qualification inspection. Qualification inspection shall be performed at a laboratory acceptable to the Government (see 6.3) on sample units produced with equipment and procedures normally used in production.

4.4.1 Qualification. Qualification shall be granted at the "L" or "M" failure rate initially and shall be based on results of the qualification inspection specified in table II. A certification of construction to the materials requirements of 3.4, and the design and construction requirements of 3.5 shall accompany the submission of qualification inspection results to the qualifying activity.

4.4.1.1 Sampling plan. The number of relays to be subjected to qualification inspection shall be as specified in table II. The sample shall be selected from a production run and shall be produced with equipment or procedures normally used in production. The qualification sample shall be as defined in table II.

4.4.2 Inspection routine. Sample units shall be subjected to the qualification inspection outlined in table II, in the order shown, except that groups Q2 through Q7 may be conducted concurrently. All sample units shall be subjected to the tests in Q1. These sample units shall then be divided into six groups as specified in table II and subjected to the inspection specified for their particular group.

4.4.3 Failures. Failures in excess of those allowed in table II shall be cause for refusal to grant qualification approval.

4.4.4 Failure-rate level and quality level verification.

4.4.4.1 FR qualification. FR qualification shall be in accordance with the general and detailed requirements of MIL-STD-690, MIL-STD-790 in its entirety, and the following details:

a. Procedure I - Qualification at the initial FR level. The manufacturer may qualify his products to failure rate levels "L" or "M" initially.

b. Procedure II - Extension of qualification to lower FR levels. To extend qualification to a lower FR level (see table III), data from two or more styles of similar construction may be combined.

c. Procedure III - Maintenance of FR level qualifications. Maintenance period of table IV shall apply. Regardless of the number of production lots produced during this period, the specified number of life test unit operations shall be accumulated to maintain qualification. If there is no production, see 4.5. The manufacturer shall preselect the sampling plan to be used during the maintenance period from table IV. In the event that failures occur exceeding the sampling plan selected (C = number), the failure rate of the product shall be increased one level or the product removed from the Qualified Products List. Noncompliance corrective action shall be in accordance with 4.7.3.3.

TABLE II. Qualification inspection.

Inspection	Requirement paragraph	Test method paragraph	Number of sample units to be inspected	Number of failures allowed
Q1			All sample units	0
Visual and mechanical inspection (internal) 1/	3.1 and 3.32	4.8.1		
Screening	3.7	4.8.2		
Solderability (3 sample units) 2/	3.8	4.8.3		
Dielectric withstanding voltage 3/	3.11	4.8.6		
Insulation resistance 3/	3.10	4.8.5		
Electrical characteristics 3/	3.12	4.8.7		
Visual and mechanical inspection (external) (dimensional check on 2 sample units only)	3.1, 3.28, 3.29, 3.32	4.8.1		
Seal	3.9	4.8.4		
Q2			4	1
Voltage transients	3.27	4.8.22		
Thermal shock	3.13	4.8.8		
Resistance to solvents	3.26	4.8.21		
Shock (specified pulse)	3.14	4.8.9		
Vibration (sinusoidal)	3.15	4.8.10.1		
Vibration (random)	3.15	4.8.10.2		
Acceleration	3.16	4.8.11		
Terminal strength	3.17	4.8.12		
Dielectric withstanding voltage 3/	3.11	4.8.6		
Insulation resistance 3/	3.10	4.8.5		
Electrical characteristics 3/	3.12	4.8.7		
Seal	3.9	4.8.4		
Q3			4	1
Magnetic interference (when specified)	3.18	4.8.13		
Coil life	3.19	4.8.14		
Resistance to soldering heat	3.20	4.8.15		
Salt atmosphere (corrosion)	3.21	4.8.16		
Dielectric withstanding voltage 3/	3.11	4.8.6		
Insulation resistance 3/	3.10	4.8.5		
Electrical characteristics 3/	3.12	4.8.7		
Seal	3.9	4.8.4		

See footnotes at end of table.

TABLE II. Qualification inspection - Continued.

Inspection	Requirement paragraph	Test method paragraph	Number of sample units to be inspected	Number of failures allowed
Q4			4	1
Overload (highest dc resistive load)	3.22	4.8.17		
Life (highest rated dc, 50,000 cycles) 4/	3.23	4.8.18		
Dielectric withstanding voltage 3/	3.11	4.8.6		
Insulation resistance 3/	3.10	4.8.5		
Electrical characteristics 3/	3.12	4.8.7		
Q5			See table III	
Life 5/	3.23	4.8.18		
Dielectric withstanding voltage 3/	3.11	4.8.6		
Insulation resistance 3/	3.10	4.8.5		
Electrical characteristics 3/	3.12	4.8.7		
Q6			4	1
Intermediate current	3.24	4.8.19		
Dielectric withstanding voltage 3/	3.11	4.8.6		
Insulation resistance 3/	3.10	4.8.5		
Electrical characteristics 3/	3.12	4.8.7		
Q7			4	1
Mechanical life	3.25	4.8.20		
Dielectric withstanding voltage	3.11	4.8.7		
Insulation resistance	3.10	4.8.6		
Turn-on time and turn-off time	3.12.6	4.8.7.6		
Visual inspection (external)	3.1, 3.28, 3.32	4.8.1		

1/ One sample unit remaining unsealed shall be subjected to the internal inspection.
2/ Solderability samples are not subjected to dielectric withstanding voltage, insulation resistance, electrical characteristics, and seal.
3/ Coil current may be done prior to dielectric withstanding voltage and insulation resistance. Testing sequence is optional for insulation resistance and dielectric withstanding voltage prior to electrical characteristics. Turn-on voltage (or current), see 3.1, and turn-off voltage may be done after coil transient suppression voltage.
4/ Post overload life testing requirements are not applicable to T0-5 and 0.100 grid pin style relays.
5/ The sample size shall be equally divided among the specified contact ratings and shall be of sufficient size to test a minimum of one relay per contact rating with rated loads on all contacts. When there are more samples than loads, the remaining loads shall be assigned in sequence beginning with the highest dc rated load.

4.5 Verification of qualification. Every 6 months the manufacturer shall provide verification of qualification to the qualifying activity. Continuation of qualification is based on meeting the following requirements. Variables measurements are acceptable.

a. MIL-STD-790 program.

b. The design of the relay has not been modified.

c. The specification requirements for the item have not been amended so as to affect the character of the item.

d. Lot rejection for group A inspection does not exceed 10 percent or one lot, whichever is greater.

e. Requirements for groups B and C are met (where applicable).

f. The records of all FR tests combined substantiate that the "L" (3.0 percent), "M" (1.0 percent), or "P" (0.1 percent) FR levels have been maintained or that the manufacturer continues to meet the "R" (0.01 percent) FR level for which qualified, although the total component cycles of testing do not, as yet, meet the requirements of 4.4.4 (see table IV).

If group C test requirements were not met and the manufacturer has taken corrective action satisfactory to the Government, the forwarding of the verification of qualification report may be delayed until within 60 days after completion of retesting of the group C inspections. In this case, the qualifying activity shall be notified of this condition within the time the original verification of qualification report was due. All reports shall be certified by a responsible company official. In the event that no production occurred during a 6-month reporting period, the manufacturer shall notify the qualifying activity the company still has the capabilities and facilities necessary to produce the relay. If during two consecutive reporting periods there has been no production, the manufacturer may be required, at the discretion of the qualifying activity, to produce test samples to perform all group B and C tests.

4.6 FR level determination. Determination of FR levels shall be based upon information from all completed life tests. Information for determination of FR levels shall be accumulated in the following manner:

a. The qualification test samples.

b. Test on every production lot which has been submitted for group B conformance inspection.

c. Test results of relays which have a similar internal design and construction, same production processes, same or higher environmental capability, and same electrical characteristics as the qualified relay and which have been tested in accordance with the group B conformance inspection conditions. These relay types must be reviewed and approved by the qualifying activity prior to being considered as acceptable relays for use in obtaining FR information.

4.6.1 FR level computation. For this computation, a sample unit which fails at any given cycle shall be classed as a failure for all subsequent measurements. However, the contractor, at his option, may physically remove failed sample units from the test. If a failed sample unit is not removed, the cycles accumulated subsequent to its failure shall not be counted toward the cumulative component cycles shown on record form.

4.6.1.1 Contact FR computation. The information from tests shall be recorded in such a manner so that, if necessary, it can be analyzed to compute contact FR.

TABLE III. Requirements for qualification and extension of qualification to lower (better) failure rate levels (90 percent confidence level).

FR level symbol	Qualified FR (% / 10,000 cycles)	Cumulative unit cycles in millions					
		1/ C = 0	C = 1	C = 2	C = 3	C = 4	C = 5
L	3.0	0.767	1.30	1.77	2.23	2.66	3.09
M	1.0	2.30	3.89	5.32	6.68	7.99	9.27
P	0.1	23.0	38.9	53.2	66.8	79.9	92.7
R	0.01	230.0	389.0	532.0	668.0	799.0	927.0

1/ C = Acceptance number or number of failures permitted. C numbers greater than five shall be coordinated and approved by the qualifying activity.

TABLE IV. Sampling plan for maintenance of FR level qualification (60 percent confidence level).

FR level symbol	Qualified FR (%/10,000 cycles)	Maximum qualification maintenance period	Cumulative unit cycles in millions				
			C 1/ = 1	C = 2	C = 3	C = 4	C = 5
L	3.0	6 months	.673	1.03	1.39	1.75	2.10
M	1.0	6 months	2.02	3.10	4.18	5.25	6.30
P	0.1	12 months	20.2	31.0	41.8	52.5	63.0
R	0.01	24 months	202	310	418	525	630

1/ C = Acceptance number or number of failures permitted. C numbers greater than five shall be coordinated and approved by the qualifying activity.

4.6.3 Exemption of data. Exemptions of data requirement in MIL-STD-690 shall apply.

4.6.4 Qualification approval for higher FR. Qualification approval granted for one of the lower FR levels will include qualification for all of the higher FR levels; e.g., qualification approval for level "R" will include qualification approval for levels "P", "M", and "L".

4.7 In-process and conformance inspection.

4.7.1 In-process inspection (see 3.6).

4.7.1.1 Diode, transistor, and FET in-process screening (see 3.6.1). Each manufacturer shall establish diode, transistor, and FET screening processes as approved by the qualifying activity. As a minimum, these processes shall include a 24-hour minimum burn-in at +125°C minimum and may use MIL-STD-750-1 or MIL-STD-883 as a guide. These processes shall be performed prior to run-in (see 4.8.2.2).

4.7.2 Inspection of product for delivery. Inspection of product for delivery shall consist of group A inspection.

4.7.2.1 Inspection and production lot.

4.7.2.1.1 Inspection lot. An inspection lot shall consist of all the relays of the same specification sheet, and those of similar design and construction as outlined in 6.3.1.2, manufactured under essentially the same process and conditions during a manufacturing period of one month maximum. The manufacturer shall define and document the period for an inspection lot. For purposes of lot formation, all terminal types may be included in the same lot; however, all lead types which are combined shall have the same method of terminal attachment. All leads in the lot shall be represented in a similar proportion by samples selected for inspection.

4.7.2.1.2 Production lot. A production lot shall consist of all relays of the same PIN. Manufacture of all parts in the lot shall have been started, processed, assembled, and tested as a group. Lot identity shall be maintained throughout the manufacturing cycle.

4.7.2.2 Group A inspection. Group A inspection shall consist of the inspections specified in table V.

4.7.2.2.1 A1, A2, and A4 tests. The A1, A2, and A4 tests shall be performed on a production lot basis on 100 percent of the product supplied under this specification (see footnotes to table V). Relays that do not meet specification requirements of these groups shall be removed from the lot.

4.7.2.2.1.1 Sampling plan. The tests in A1, A2, and A4 shall be performed on each relay offered for inspection, except as noted.

4.7.2.2.1.2 Rejected lots. Relays that do not meet the requirements of the tests in A1 and A4 shall be rejected and shall be removed from the lot. If more than 5 percent of the relays are discarded during A2 testing, the production lot shall be rejected and not offered for reinspection.

4.7.2.2.2 A3 tests.

4.7.2.2.2.1 Sampling plan. Two samples shall be selected randomly from each inspection lot and subjected to the A3 solderability test. If there are one or more defects, the lot shall be considered to have failed. Relays failing the A2 electrical tests, or rejected for other criteria which will not influence solderability, may be used for solderability testing. All rejected relays used as samples must accompany the acceptable relays through all processing environments. The rejected relays shall be marked in a definite manner in order to preclude mixing with acceptable parts.

4.7.2.2.2.2 Rejected lots. In the event of one or more defects, the inspection lot is rejected. The manufacturer may use one of the following options to rework the lot:

a. Each production lot that was used to form the failed inspection lot shall be individually submitted to the solderability test as required in 4.8.3. Production lots that pass the solderability test are acceptable for shipment. Production lots failing the solderability test can be reworked as described in 4.7.2.2.2.2b and 4.7.2.2.2.2c.

b. The manufacturer submits the failed lot to a 100 percent solder dip using an approved solder dip process in accordance with 3.5.7.4. Two additional samples shall be selected and subjected to the solderability test with zero defects allowed. If the lot fails this solderability test, the lot shall be rejected and shall not be furnished against the requirements of this specification.

c. The manufacturer may submit the failed lot to a strip and replate process followed by a complete group A inspection. The reworked lot shall be considered a new lot for the purpose of the 5 percent requirement of A2. If the lot fails this solderability test, the lot shall be rejected and shall not be furnished against the requirements of this specification.

4.7.3 Periodic inspections. Periodic inspections shall consist of groups B and C. Except where the results of these inspections show noncompliance with the applicable requirements (see 4.7.3.3), delivery of products which have passed group A shall not be delayed pending the results of these periodic inspections.

4.7.3.1 Group B inspection. Group B inspection shall consist of the tests in the order specified in table VI and shall be made on sample units which have been subjected to and have passed the group A inspection.

4.7.3.1.1 Sampling plan. The test sample size shall be determined by the manufacturer so that the relay cycles generated meet the maintenance of qualification requirements specified for the qualified failure rate level (see 4.4.4). A minimum quantity of samples shall be selected from each inspection lot as determined by the quantity needed to maintain the FR level divided by the number of inspection lots in the reporting period. In all cases, the sampling plan shall be approved by the qualifying activity. As far as is practicable, the relays tested during a maintenance period shall be representative of all relays produced during this period. The accumulated information shall be used for maintenance and extension of failure rate qualification.

4.7.3.1.2 Disposition of sample units. Sample units which have been subjected to group B inspection shall not be delivered on the contract or purchase order.

TABLE V. Group A inspection. 1/

Inspection	Requirement paragraph	Test method paragraph	Inspection requirements
A1			
Vibration (sinusoidal) 2/	3.15	4.8.10.1	100 percent
Screening, internal moisture 3/	3.7	4.8.2.1	see 3/
Screening, run-on	3.7	4.8.2.2	100 percent
A2			100 percent
Dielectric withstanding voltage 4/	3.11	4.8.6	
Insulation resistance 4/	3.10	4.8.5	
Electrical characteristics 4/	3.12	4.8.7	
A3			2 samples
Solderability	3.8	4.8.3	
A4			100 percent
Visual and mechanical inspection (external) 5/ 6/	3.1, 3.28, 3.29, 3.32	4.8.1	
Seal	3.9	4.8.4	

1/ Tests shall be performed in the order shown.
2/ For FR level L relays, the vibration (sinusoidal) test shall be performed on 13 relays per lot with no failures allowed. In the event of a failure, the lot shall be 100 percent inspected. For lots with fewer than 13 relays, the lot shall be 100 percent inspected.
3/ The internal moisture test shall be performed on 13 relays per lot with no failures allowed. In the event of a failure, the lot shall be 100 percent inspected. For lots with fewer than 13 relays, the lot shall be 100 percent inspected.
4/ Coil current may be done prior to dielectric withstanding voltage and insulation resistance. Testing sequence is optional for insulation resistance and dielectric withstanding voltage prior to the electrical characteristics. Turn-on voltage (or current), see 3.1, and turn-off voltage may be done after coil transient suppression voltage.
5/ Minor defects, such as marking may be reworked. A two piece sample of each lot shall be mechanically inspected and visually inspected for cracked glass. If cracks exceeding the allowable limits are found, the entire lot shall be inspected to the criteria of 3.29.
6/ A two piece sample of each relay style be inspected in accordance with 6.3.1, except as limited by the housing style or external attachments.

TABLE VI. Group B inspection.

Inspection	Requirement paragraph	Test method paragraph
Life 1/	3.23	4.8.18
Dielectric withstanding voltage 2/	3.11	4.8.6
Insulation resistance 2/	3.10	4.8.5
Electrical characteristics 2/, 3/	3.12	4.8.7
Visual inspection (external)	3.1, 3.28, 3.32	4.8.1

1/ Sample units shall be tested in a predetermined sequence as defined by the manufacturer and approved by the qualifying activity. All loads specified in the applicable specification sheet shall be represented. All loads need not be represented in a 6-month maintenance period but shall be represented within two 6-month maintenance periods.

2/ Coil current may be performed prior to dielectric withstanding voltage and insulation resistance. The testing sequence is optional for insulation resistance and dielectric withstanding voltage prior to the electrical characteristics. Turn-on voltage (or current), see 3.1, and turn-off voltage may be done after coil transient suppression voltage.

3/ The coil resistance of hybrid relays is not directly measurable at the relay terminals due to the resistance of the drivers.

4.7.3.2 Group C inspection. Group C inspection shall consist of the tests in the order specified in table VII. Group C inspection shall be made on sample units selected from inspection lots which have passed the group A inspection.

4.7.3.2.1 Sampling plan. Three sample units shall be taken from production every month for C1, two samples for C2 every 6 months, two samples for C3 every 6 months, two samples for C4 every 6 months, two samples for C5 every 12 months, and two samples for C6 every 36 months.

4.7.3.2.1.1 Similarity. For purposes of complying with group C requalification, relays, of similar construction and processing may be combined (see 6.3.1.1 and 6.3.1.2).

4.7.3.2.2 Failures. No failures shall be permitted except for intermediate current in C1. 2/

4.7.3.2.3 Disposition of sample units. Sample units which have been subjected to group C inspection shall not be delivered on the contract or purchase order.

4.7.3.3 Noncompliance. During group B and C inspections, when a failure exceeds the allowable number of failures, the manufacturer shall notify the qualifying activity and the cognizant inspection activity of such failure within 5 working days. The manufacturer shall prepare to take corrective action on the materials or processes, or both, as warranted, and on all units of product which can be corrected and which were manufactured under essentially the same materials and processes, and which are considered subject to the same failure. Acceptance and shipment of the product shall be discontinued until corrective action, acceptable to the qualifying activity has been taken. After the corrective action has been taken, group B and C inspections shall be repeated on additional sample units (all tests, or the tests which the original sample failed, at the option of the qualifying activity). Group A inspection may be reinstituted; however, final acceptance and shipment shall be withheld until the group B or C inspection has shown that the corrective action was successful. In the event of failure after reinspection, information concerning the failure shall be furnished to the qualifying activity and the cognizant inspection activity within 5 working days.

2/ One intermediate current failure per 6-month retention period shall be permitted per FR groupings of similar relay types as approved by the qualifying activity.

TABLE VII. Group C inspection.

Inspection	Requirement paragraph	Test method paragraph	Number of sample units for inspection
C1 (every month) 1/			3
Intermediate current	3.24	4.8.19	
Dielectric withstanding voltage 2/	3.11	4.8.6	
Insulation resistance 2/	3.10	4.8.5	
Electrical characteristics 2/	3.12	4.8.7	
Visual inspection (external)	3.1, 3.28, 3.32	4.8.1	
C2 (every 6 months) 3/			2
Voltage transients	3.27	4.8.22	
Thermal shock	3.13	4.8.8	
Shock (specified pulse) 4/	3.14	4.8.9	
Vibration 4/	3.15	4.8.10	
Terminal strength	3.17	4.8.12	
Dielectric withstanding voltage 2/	3.11	4.8.6	
Insulation resistance 2/	3.10	4.8.5	
Electrical characteristics 2/	3.12	4.8.7	
Seal	3.9	4.8.4	
Visual inspection (external)	3.1, 3.28,3.32	4.8.1	
C3 (every 6 months)			2
Overload (highest dc resistive load)	3.22	4.8.17.1	
Life (highest rated dc, 50,000 cycles) 5/	3.23	4.8.18.1	
Dielectric withstanding voltage 2/	3.11	4.8.6	
Insulation resistance 2/	3.10	4.8.5	
Electrical characteristics 2/	3.12	4.8.7	
Visual inspection (external)	3.1, 3.28, 3.32	4.8.1	
C4 (every 6 months)			2
Mechanical life	3.25	4.8.20	
Dielectric withstanding voltage	3.11	4.8.6	
Insulation resistance	3.10	4.8.5	
Turn-on time and turn-off time	3.12.6	4.8.7.6	
Visual inspection (external)	3.1, 3.28,3.32	4.8.1	

See footnotes at end of table.

TABLE VII. Group C inspection - Continued.

Inspection	Requirement paragraph	Test method paragraph	Number of sample units for inspection
C5 (every 12 months) 3/			2
Coil endurance	3.19.1	4.8.14.1	
Thermal Shock	3.13	4.8.8	
Vibration (sinusoidal)	3.15	4.8.10.1	
Resistance to soldering heat	3.20	4.8.15	
Dielectric withstanding voltage 2/	3.11	4.8.6	
Insulation resistance 2/	3.10	4.8.5	
Electrical characteristics 2/	3.12	4.8.7	
Visual inspection (external)	3.1, 3.28, 3.32	4.8.1	
Seal	3.9	4.8.4	
C6 (every 36 months) 3/			2
Magnetic interference (when specified)	3.18	4.8.13	
Coil life - Deleted			
Salt atmosphere (corrosion)	3.21	4.8.16	
Acceleration	3.16	4.8.11	
Resistance to solvents	3.26	4.8.21	
Dielectric withstanding voltage 2/	3.11	4.8.6	
Insulation resistance 2/	3.10	4.8.5	
Electrical characteristics 2/	3.12	4.8.7	
Visual inspection (external)	3.1, 3.28, 3.32	4.8.1	
Seal	3.9	4.8.4	

1/ One intermediate current failure per 6-month retention period shall be permitted per FR groupings of similar relay types as approved by the qualifying activity.
2/ Coil current may be performed prior to dielectric withstanding voltage and insulation resistance. The testing sequence is optional for insulation resistance and dielectric withstanding voltage prior to the electrical characteristics. Turn-on voltage (or current), see 3.1, and turn-off voltage may be done after coil transient suppression voltage.
3/ Relays with spreader mounting pads or spacer mounting pads shall not be subjected to the testing of this group.
4/ Each mounting configuration to which a manufacturer is qualified will be represented during the normal continuous periodic testing period. It will usually take more than one periodic testing period to achieve testing of all of the applicable mountings.
5/ Life testing requirements are not applicable to T0-5 and 0.100 grid style relays.

4.8 Methods of inspection.

4.8.1 Visual and mechanical. Relays shall be examined to verify that the materials, external design and construction, physical dimensions, marking, and workmanship are in accordance with the applicable requirements (see 3.1, 3.4, 3.5, 3.28, and 3.32). Paragraph 3.29 inspection requirements apply only when indicated.

4.8.2 Screening (see 3.7).

4.8.2.1 Internal moisture. Relays (coil de-energized) shall be held at +15°C to +25°C for a minimum of 30 minutes. The insulation resistance of all contact pins to case only shall be measured and observed. The relay coil shall be energized with 140 percent of rated voltage for a period of 2 minutes 30 seconds. 3/ The insulation resistance of all contact pins to case only shall be verified a minimum of once each 30 seconds during this period and the lowest value shall meet the requirements of 3.7.

4.8.2.2 Run-in.

a. High temperature. For qualification inspection only; relays shall be subjected to +125°C with rated supply voltage on the coil for 1 hour. For group A testing, relays shall be subjected to +125°C; the test chamber shall stabilize at +125°C after the specimens have been inserted into the test chamber. The test shall be performed with rated supply voltage on the coil circuit for 15 minutes minimum for relays weighing 1 ounce or less and 30 minutes minimum for relays weighing over 1 ounce but not more than .3 pound. The specified pickup value (voltage) shall be measured to determine compliance with 3.1. While at this temperature, the relays shall be subjected to a 2,500 cycle run-in test. The cycling rate shall be calculated using the formulas below and the maximum turn-on and turn-off times as specified, see 3.1 for the relay under test. Relays shall have the contacts loaded as follows: Open circuit load voltage 10 to 50 mV dc or peak ac. The load current shall be 10 to 50 µA. The contact resistance or voltage drop, as applicable, of each pair of mated contacts shall be monitored during 40 percent minimum of each "on" and each "off" period. The monitoring equipment shall automatically turn off when a failure occurs, or shall record every failure.

b. Low temperature. Following high temperature, for qualification only, relays shall be subjected to -65°C with the coil or coils de-energized for 1 hour. For group A testing, relays shall be subjected to -65°C; the test chamber shall stabilize at -65°C after the specimens have been inserted into the test chamber. The test shall be performed with the coil de-energized for 15 minutes minimum for relays weighing 1 ounce or less and 30 minutes minimum for relays weighing over 1 ounce but not more than .3 pound. At the end of either period, the specified dropout value (voltage) shall be measured to determine compliance with 3.1. While at this temperature, the relays shall be subjected to a 2,500 cycle run-in test in accordance with the procedure outlined in 4.8.2.2a.

$$\underset{(cycles\ per\ second)}{Maximum\ cycle\ rate} = \frac{0.1}{\underset{(seconds)}{Maximum\ turn-on\ time} + \underset{(seconds)}{Maximum\ turn-off\ time}}$$

4.8.3 Solderability (see 3.8). Relays shall be tested in accordance with method 208 of MIL-STD-202. The following detail and exception shall apply: All terminations of each part shall be tested.

4.8.4 Seal (see 3.9). Relays shall be tested in accordance with 4.8.4.1 as applicable. In case of dispute, method 1014 of MIL-STD-883, test condition B shall govern.

3/ Wherever "coil shall be energized" is used herein, it is considered to include turn-on voltage applied.

4.8.4.1 Relays sealed with or without a tracer gas. Relays shall be tested for fine leak and gross leak using one of the fine leak procedures and one of the gross leak procedures in the following table. Fine leak shall be performed prior to gross leak, unless MIL-STD-883 (method 1014) Test Condition B_2/B_1 is used. The standard leak rate (L value in Eq. (1) of MIL-STD-883 Method 1014) shall be 1 X 10^{-6} atm cm^3/s of air.

Fine Leak
MIL-STD-883 (method 1014) – Test Condition B_1
MIL-STD-883 (method 1014) – Test Condition A_2
Gross Leak
MIL-STD-883 (method 1014) – Test Condition B_2
MIL-STD-202 (method 112) – Test Condition D
MIL-STD-883 (method 1014) – Test Condition C
Fine Leak and Gross Leak Combination
MIL-STD-883 (method 1014) – Test Condition B_2/B_1 When using the radioisotope tests, it is recommended practice to use B_2 first to remove gross leakers prior to the fine leak test B_1, which minimizes the Kr85 entrapped in rejected devices.

4.8.5 Insulation resistance (see 3.10). Relays shall be tested in accordance with method 302 of MIL-STD-202 with the relay in the energized and de-energized positions. The hybrid device should be protected during testing in the deenergized position. Unless other specified (see 3.1), the following details shall apply:

a. Test conditions: A (for relays with coil and contact ratings both below 60 volts) and B (for all other relays).

b. Points of measurement: As specified in points of application in table VIII.

c. Attributes data is acceptable.

4.8.6 Dielectric withstanding voltage (see 3.11). Relays shall be tested as specified in 4.8.6.1 and in accordance with 4.8.6.2. Testing in accordance with 4.8.6.2 is not applicable to groups A, B, C1, or C5. The hybrid device should be protected during testing in the deenergized position.

4.8.6.1 At atmospheric pressure. Relays shall be tested in accordance with method 301 of MIL-STD-202. Unless otherwise specified (see 3.1), the following details shall apply:

a. Points of application and magnitude of test voltage: As shown in table VIII.

b. Maximum leakage current: 100 μA. For group A, leakage current measuring device shall be capable of measuring the leakage current to an accuracy of at least 10 percent.

c. Duration of application: 60 seconds minimum for qualification and groups B and C tests; 5 (60 Hz) cycles minimum for group A tests on test equipment which has an adequate response time to measure the leakage current and is approved by the qualifying activity. For group A tests on other than automatic test equipment (i.e., bench setup), the application time shall be 5 seconds minimum.

d. Attributes data is acceptable.

TABLE VIII. Test details for dielectric withstanding voltage.

Points of application	Test voltage
Between case, frame, or enclosure and between all contacts in the energized and de-energized positions Between case, frame, or enclosure and coil Between all contacts and coil Between open contacts in the energized and de-energized positions Between contact poles in the energized and de-energized positions (applicable to multipole relays)	1,000 ±5 percent volts ac plus twice rated voltage or the specified value ±5 percent

4.8.6.2 At reduced barometric pressure. Relays shall be tested in accordance with method 105 of MIL-STD-202. The following details shall apply:

a. Method of mounting: Normal mounting means.

b. Test condition: C.

c. Tests during subjection to reduced pressure: As specified in 4.8.6.1, unless otherwise specified (see 3.1), except test voltage shall be 350 volts.

d. Points of application of test voltage: All terminals to case.

e. Duration of application: 60 seconds minimum for qualification and groups B and C tests.

f. Attributes data is acceptable.

4.8.7 Electrical characteristics (see 3.12).

4.8.7.1 Static contact resistance or contact voltage drop (see 3.12.1). The static contact resistance or static contact voltage drop shall be required for each pair of contacts. If both contact voltage drop and static contact resistance are specified in the documents the manufacturer has the choice of which to run for the contacts. However, each contact must be tested.

4.8.7.1.1 Static contact resistance (see 3.12.1). Relays shall be tested in accordance with method 307 of MIL-STD-202. The following details and exceptions shall apply:

a. Method of connection: The point of measurement shall be on leads external to the case. Suitable jigs and fixtures shall be used.

b. Test load: Test current shall be 100 mA at a voltage equal to or below rated voltage, except those rated for low level. See 6.1.1 for low level voltage rating. For low level, the current shall be 10 mA maximum. (dc or peak ac).

c. Post test current: Unless life tests are specified in the grouping, load current and voltage shall be 100 mA maximum at a voltage equal to or below rated voltage. When life tests are specified in the grouping, the same current at a maximum of rated voltage as the life test, or 100mA maximum at 28vdc maximum, shall be used.

d. Points of measurements:

(1) Between all normally closed mated contacts.

(2) Between all normally open mated contacts, with the coil energized with rated coil voltage (or current) for non-latch type relays, or in the latch/reset position for magnetic latch type relays, with or without coil energized.

e. Number of activations prior to measurement: During static resistance tests, the number of activation prior to measurement is none.

f. Number of test activations: Maximum of three activations in each closed contact position for qualification Q1. For all remaining groups in the Qualification table, group A, group B, and group C, one to three activations in each closed contact position.

g. Number of measurements per activation: One in each closed contact position. The readings shall be taken after the circuit has stabilized and within a maximum time of 2 seconds after activation.

4.8.7.1.2 Contact voltage drop (see 3.12.1). Relays shall be tested in accordance with method 307 of MIL-STD-202. The following details and exception shall apply:

a. Method of connection: The point of measurement shall be on leads external to the case. Suitable jigs and fixtures shall be used.

b. Test load: Test current shall be rated resistive current at rated voltage or less. See 6.1.1 for low level voltage rating. If a lower test current is used, the millivolt drop shall be adjusted according to Ohm's law.

c. Post test loads for intermediate current and life: When intermediate current is specified in the grouping, the same current as intermediate current, or 100 mA, at a voltage equal to or below rated voltage shall be used. When life tests are specified in the grouping, the same current as the high level life test, or 100 mA, at a voltage equal to or below rated voltage shall be used. If a lower test current is used, the millivolt drop shall be adjusted according to Ohm's law.

d. Points of measurements:

(1) Between all normally closed mated contacts.

(2) Between all normally open mated contacts, with the coil energized with rated coil voltage (or current) for non-latch type relays, or in the latch/reset position for magnetic latch type relays, with or without coil energized.

e. Number of activations prior to measurement: During contact voltage drop tests, the number of activation prior to measurement is none.

f. Number of test activations: Maximum of three activations in each closed contact position for qualification Q1. For all remaining groups in the Qualification table, group A, group B, and group C, one to three activations in each closed contact position.

g. Number of measurements per activation: One in each closed contact position. The readings shall be taken after the circuit has stabilized and within a maximum time of 2 seconds after activation.

4.8.7.2 Specified pickup, hold, and dropout voltages (turn-on voltage or current applied) (see 3.12.2). Specified pickup, hold, and dropout voltages shall be measured as specified in 4.8.7.2.1, 4.8.7.2.2, or 4.8.7.2.3. Unless otherwise specified (see 3.1), for qualification inspection, the relay shall be mounted in each of three mutually perpendicular planes. For conformance inspection, the relay mounting position is optional. A suitable indicating device shall be used to monitor contact position. During the test, all contacts shall not change state (break or remake) when the coil is energized above the pull-in voltage, when the coil voltage is lowered to any value above the specified hold (maximum) dropout voltage, or when the coil voltage is reduced from the (minimum) dropout voltage to zero. It is permissible to perform specified pickup, hold, and dropout voltages using step function voltage changes as specified in 4.8.7.2.1 or 4.8.7.2.2, and 4.8.7.2.3. Due to the fact that slow ramping will overheat relay coils and vary specified pickup, hold, and dropout voltages, the step function method shall be the governing method in cases of dispute.

4.8.7.2.1 Specified pickup voltage (turn-on voltage or current applied). The voltage shall be increased from zero until the relay operates, and the specified pickup voltage shall be measured. It is permissible to perform specified pickup, hold, and dropout voltage using a step function voltage changes as follows and as illustrated on figure 3.

a. Step up to the specified pickup value (voltage), contacts should have transferred and all normally-open contacts should be making.

b. Increase to rated coil voltage.

c. Step down to specified hold voltage. Normally-open contacts must still be making.

d. Step down to specified dropout voltage, all contacts should have transferred and all normally-closed contacts should be making.

e. Step down to zero voltage.

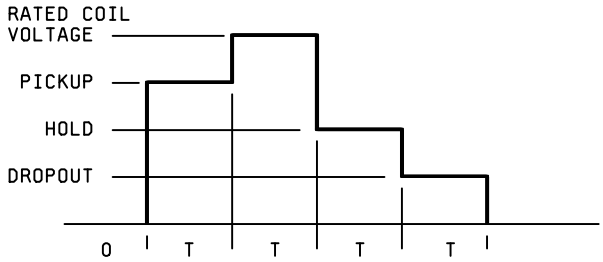

FIGURE 3. Pickup, hold, and dropout sequencing.

4.8.7.2.2 Specified hold voltage (turn-on voltage applied). Rated voltage shall be applied to the coil. The voltage shall then be reduced to the specified hold voltage (see 3.1). All contacts shall not change state. It is permissible to perform this test using the step function voltage program described in 4.8.7.2.1 and figure 3.

4.8.7.2.3 Specified dropout voltage (turn-on voltage applied). Rated voltage shall be applied to the coil. The voltage shall then be gradually reduced until all contacts return to the deenergized position and the specified dropout voltage shall be measured. It is permissible to perform this test using the step function voltage program described in 4.8.7.2.1 and figure 3.

4.8.7.3 Coil current and coil resistance (see 3.12.3).

4.8.7.3.1 Coil current (see 3.12.3). When rated voltage is applied to the coil terminals the current must be within the limits as specified (see 3.12.3.1). Apply at rated voltage for 5 seconds maximum.

4.8.7.3.2 Coil resistance (see 3.12.3.2). Coil resistance is approximately calculated as follows: The rated voltage of the coil shall be divided by the coil current.

4.8.7.4 Turn-on voltage (coil supply voltage on) (see 3.12.4). Apply rated coil supply voltage (see 3.1). The turn-on voltage shall then be applied. Verify that the relay has turned on. Unless otherwise specified (see 3.1), for qualification inspection, the relay shall be mounted in each of three mutually perpendicular planes. For conformance inspection, the relay mounting position is optional. A suitable indicating device shall be used to monitor contact operation.

4.8.7.5 Turn-off voltage (coil supply voltage on) (see 3.12.5). Rated coil supply voltage and control signal voltage shall be applied to the relay (see 3.1). The control signal shall be reduced to maximum turn-off voltage. Verify that the relay has turned off (see 3.1). Unless otherwise specified (see 3.1), for qualification inspection, the relay shall be mounted in each of three mutually perpendicular planes. For conformance inspection, the relay mounting position is optional. A suitable indicating device shall be used to monitor contact operation.

4.8.7.6 Turn-on time and turn-off time (see 3.12.6). The turn-on time and the turn-off time shall be measured using an oscilloscope or other acceptable means approved by the qualifying activity. Rated coil supply voltage shall be applied to the relay during toggling of the control signal. The circuit shown on figure 4, or equivalent, shall be used. The turn-on time and the turn-off time shall be exclusive of contact bounce. Timing measurements shall be made on all contact sets.

4.8.7.6.1 Break before make (see 3.12.6.1). The circuit shown on figure 5 or an equivalent circuit approved by the qualifying activity shall be used to monitor contact position.

4.8.7.7 Contact dynamic characteristics (see 3.12.7).

4.8.7.7.1 Contact bounce (applicable to failure level rate "L") (see 3.12.7.1). Contact bounce shall be measured on each contact set using an oscilloscope or other acceptable means approved by the qualifying activity. The trace shall show contact switching at turn-on and turn-off and appropriate timing markers when using an oscilloscope. Rated voltage shall be applied to the coil. Contacts shall be loaded with 6 V dc maximum or peak ac at 10 mA maximum. After high level rated load life and intermediate current tests, contact bounce shall be measured at 100 mA maximum at 28 V dc maximum. A contact bounce shall be considered any occurrence equal to or greater than 90 percent of the open circuit voltage with a pulse width of 10 µs or greater. The circuit shown on figure 4, or equivalent, shall be used.

4.8.7.7.2 Contact stabilization time (applicable to failure rate levels "M", "P", and "R") (see 3.12.7.2). Contact stabilization time shall be measured on each contact set using an oscilloscope of other acceptable means approved by the qualifying activity. The equipment shall have the capability of indicating a failure pulse width of greater than 1 µs. The trace shall show contact switching at operate and release, appropriate timing markers and maximum allowable contact voltage drop markers (which equates to the allowable static contact resistance) when measured using an oscilloscope. Rated voltage shall be applied to the coil. Contacts shall be loaded with 50 mV dc maximum or peak ac at 50 mA maximum. Contact stabilization time shall be defined as the maximum time allowed for the contacts to reach and maintain a static contact resistance state following the actual operate or release time of the relay (essentially, it is the sum of the contact bounce time and the time for the dynamic contact resistance to stabilize to the static contact resistance). After high level rated load life and intermediate current tests, the contacts shall be loaded at 100 mA at 28 V dc maximum, and test voltage and contact bounce in lieu of contact stabilization time shall be measured as specified in 4.8.7.7.1.

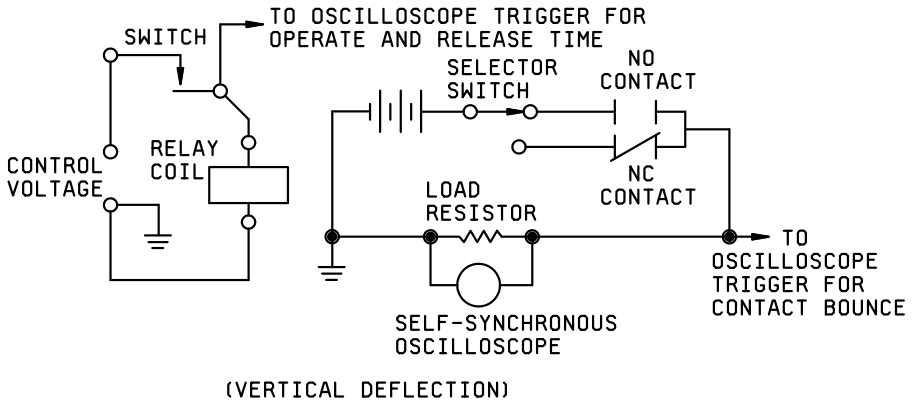

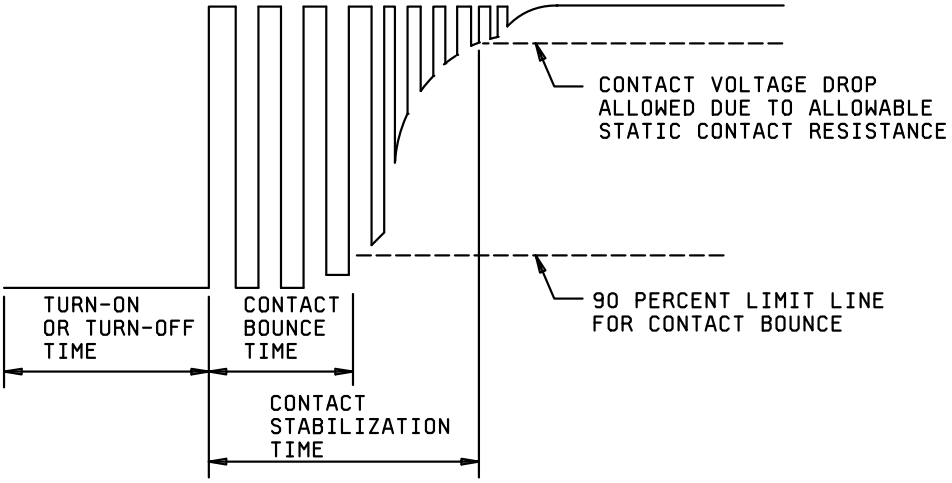

FIGURE 4. Typical circuit for turn-on and turn-off time, contact bounce and contact stabilization time with typical traces.

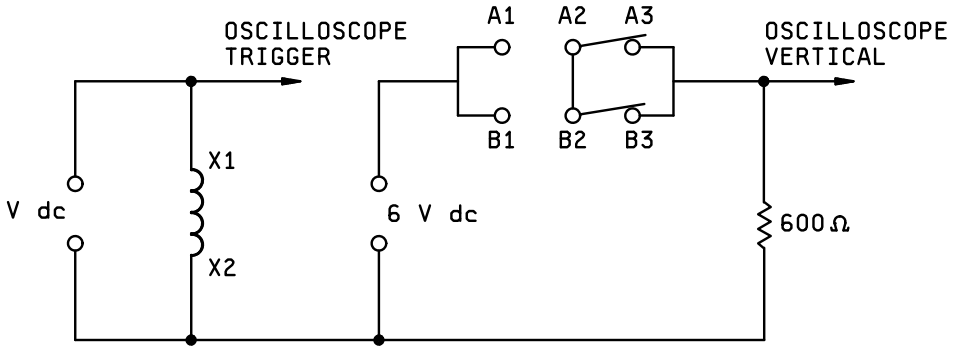

FIGURE 5. Typical break before make test circuit.

4.8.7.8 Coil transient suppression (see 3.12.8).

4.8.7.8.1 Coil transient suppression (applicable to dc operated relays with internal coil transient suppression (see 3.12.8). The coil shall be connected as shown on figure 6 or by an equivalent test circuit.

NOTE: Voltage greater than the maximum specified may damage the coil suppression device.

a. The switching relay shall be a mercury wetted contact switching relay. E is the nominal operating voltage for the relay under test. The switching relay is operated from a source voltage independent of E. CRO is cathode-ray oscilloscope with a rise time of .020 µs or less. The horizontal (time) deflection scale shall be set at 0.5 to 1 ms per division (0.5 to 1 ms/cm), and the vertical (voltage) deflection to be such that the vertical gain provides accuracy in reading. Example: 5 V/cm for a 12 V back EMF limit, or 10 V/cm for a 24 V back EMF limit. Both horizontal (time) and vertical (voltage) deflection traces shall be of a calibrated grid spacing such as cm or mm.

b. The source, E, shall be a low impedance source capable of delivering the rated coil voltage with no limiting resistor or potentiometer used to regulate the line voltage.

c. The switching relay shall be closed for a minimum of ten times the turn-on time of the test relay, or switching relay whichever is longer, to allow the oscilloscope and circuit network to stabilize and then opened to obtain the induced voltage deflection trace. The relay is to be driven at a 10 ±2 Hz cycling rate with approximately equal open and closed times.

(1) The reading shall be observed on the oscilloscope or other equivalent electronic test instrumentation. The magnitude of the induced voltage transient shall be noted. A typical trace is presented on figure 7.

(2) The maximum value of three consecutive readings shall be noted.

d. For group A testing, only one measurement and other suitable test methods may be used to verify that the back EMF (coil kick) is within the specified limit.

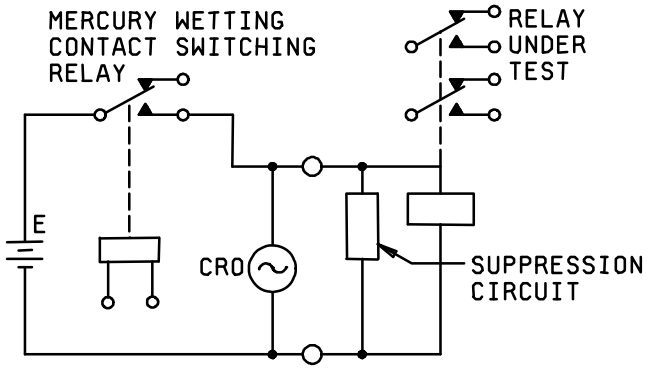

FIGURE 6. Coil transient suppression test circuit.

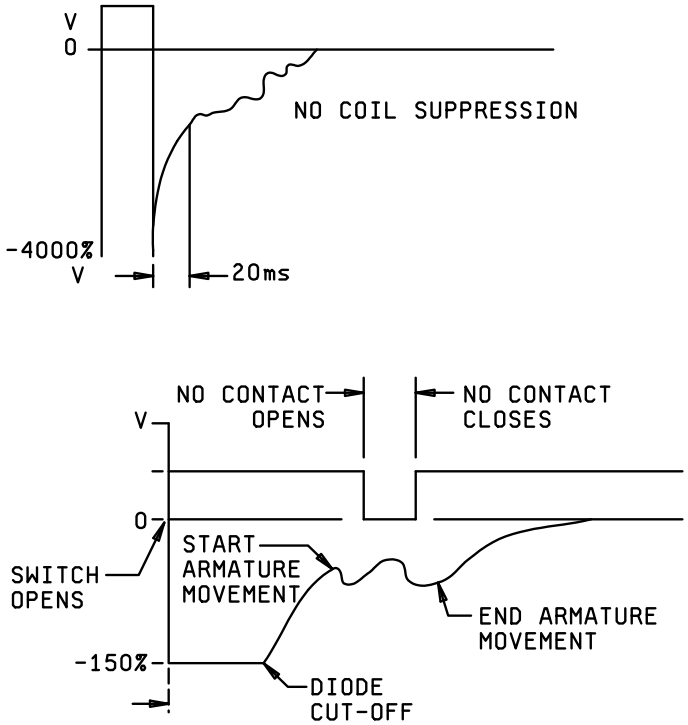

FIGURE 7. Typical transient voltage.

4.8.8 Thermal shock (see 3.13). Relays shall be tested in accordance with method 107 of MIL-STD-202. The following details and exceptions shall apply:

a. Special mounting: Relays shall be suspended in the test chamber by twine, test socket, or other nonheat-conducting material. Test leads may be used for mounting; however, they shall not exceed the diameter or cross section of the device lead. (NOTE: When test sockets are used, the surface of the header shall not directly contact with the surface of the socket and the leads of the socket shall not exceed the diameter or cross section of the device lead).

b. Test condition: B, except exposure time at temperature extreme during the fifth cycle shall be for 2 hours each.

c. Measurements at each temperature extreme during steps 1 and 3 of this fifth cycle at the end of each temperature exposure, and with the relays still in the conditioning chamber, the pickup, hold, dropout, turn-on, and turn-off voltages, and turn-on and turn-off times, shall be measured as specified in 4.8.7.2, 4.8.7.4, and 4.8.7.6 respectively. Pickup, hold, and dropout voltages shall be measured in any position.

d. Examination after test: Relays shall be visually examined for cracking, peeling, and flaking of the finish, and the insulation resistance and dielectric withstanding voltage shall then be measured as specified in 4.8.5 and 4.8.6.1.

4.8.9 Shock (specified pulse) (see 3.14). Unless otherwise specified (see 3.1), relays shall be tested in accordance with method 213 of MIL-STD-202. The following details and exceptions shall apply:

a. Mounting method: For relays having flanges or studs, mounting shall be by the flanges or studs; and for relays without flanges, mounting shall be by plugging into sockets, or other suitable means approved by the qualifying activity.

b. Test condition: A, B, or C, as applicable (see 3.1).

c. Electrical-load conditions: In each direction of shock, the coil shall be deenergized during two shocks and energized with rated voltage during one shock.

d. Measurements during shock: Contacts shall be monitored with an adequate test circuit as approved by the qualifying activity. The test circuit shall verify that no opening of closed contacts in excess of 10 µs and no false closure or bridging of open contacts occurs in excess of 1 µs. The contact load shall be 10 mA maximum at 6 V dc maximum (dc or peak ac).

e. Examination after test: Relays shall be inspected for evidence of structural failure or other damage which might impair the operation of the relay.

4.8.10 Vibration (see 3.15).

4.8.10.1 Vibration (sinusoidal). Unless otherwise specified (see 3.1), relays shall be tested in accordance with method 204 of MIL-STD-202. The following details and exceptions shall apply:

a. Method of mounting: As specified in 4.8.9a.

b. Electrical-load conditions: For qualification and group C inspections, relays shall be tested with the coil energized for 2 hours at rated voltage and with the coil de-energized for 2 hours, in each of the three mutually perpendicular (x, y, and z) directions. Contacts shall be loaded as specified in 4.8.10.1d.

c. Test condition: D, except vibration level is the lesser of .195 inch (4.95 mm) double amplitude of 30 G, and frequency range is 10 to 3,000 Hz.

d. Tests during vibration: As specified in 4.8.9d.

e. Unless otherwise specified (see 3.1), for group A testing, only one cycle shall be performed over the frequency range of 100 Hz to 3,000 Hz. The relay shall be vibrated in the direction of contact motion. At the option of the manufacturer, the relay production lot may be divided in three equal groups and each group shall be tested in one of three mutually perpendicular axis (X, Y, and Z). When relays are tested as specified in the optional procedure, a failure of any relay in any axis shall require 100 percent inspection of all relays in the production lot in each axis. For all contact forms except contact form "A", the cycle shall consist of 3 minutes up with the coil energized with rated voltage and 3 minutes down with coil de-energized. The cycle for form contact "A" shall consist of 3 minutes up with the coil de-energized and 3 minutes down with the coil energized.

f. Examination after test: Prior to removal from test fixture and without disturbing the relay, apply maximum over the temperature range pick-up voltage value and turn-on voltage (see 3.1) to the relay, and then verify that relay contacts transfer. Remove coil voltage and turn-on voltage, and then verify that relay contacts transfer. Failure of relay contacts to transfer shall be cause for rejection. After removal from test fixture, the relays shall then be inspected for evidence of structural failure or other damage which might impair the operation of the relay.

4.8.10.2 Vibration (random). Relays shall be tested in accordance with method 214 of MIL-STD-202. The following details and exceptions shall apply:

a. Method of mounting: As specified in 4.8.9a.

b. Electrical-load conditions: For qualification and group C inspections, relays shall be tested with the relay energized at rated voltage for 15 minutes and with the coil de-energized for 15 minutes, in each of three mutually perpendicular (x, y, and z) directions. When applicable to group A inspection, the test time shall be 3 minutes for each state described above. Contacts shall monitored as specified in 4.8.10.2d.

c. Test condition: G (0.4 G^2/Hz, 23.91 rms G).

d. Tests during vibration: As specified in 4.8.9d.

e. Examination after test: As specified in 4.8.10.1f.

4.8.11 Acceleration (unless otherwise specified, see 3.1 and 3.16). Relays shall be tested in accordance with method 212 of MIL-STD-202. The following details and exceptions shall apply:

a. Mounting of specimens: As specified in 4.8.9a.

b. Test conditions: Unless otherwise specified (see 3.1), test condition A, 50 G's, (acceleration shall be applied in each direction along three mutually perpendicular axes (x, y, and z) of the specimen; one axis shall be in the direction most likely to cause malfunction). In each direction, the coil shall be de-energized for 5 minutes, rated coil voltage shall be momentarily applied, and the voltage shall be reduced to the maximum ambient pickup voltage as specified (see 3.1) for 5 minutes. Contacts shall be monitored for proper position.

c. Examination after test: As specified in 4.8.9e.

4.8.12 Terminal strength (see 3.17). Relays shall be tested in accordance with method 211 of MIL-STD-202 in accordance with the following, as applicable. Unless otherwise specified herein, two terminals of each discrete design, size, and configuration shall be tested; however, if there be only one of such design, size, and configuration, it shall be tested.

4.8.12.1 Pull test (all terminal types). Terminals shall be tested as specified in test condition A; the force shall be as specified (see 3.1).

4.8.12.2 Bend test (all terminal types). Terminals shall be tested as specified in test condition B (two bends) or C, as applicable. Loads for test condition C shall be as specified (see 3.1).

4.8.12.3 Twist test (wire lead terminals only) (not applicable to relays with spreader mounting pads or leads less than .50 inch (12.7 mm) in length). All terminals shall be tested as specified in test condition D, except during application of torsion, each terminal shall be rotated 45° in one direction, then returned to start; rotated in opposite direction 45°, then returned to start. Each terminal shall be subjected to two such rotations and returns. Each terminal shall be held at a point .75 inch (19.05 mm) from the point of emergence from the relay, or terminal end for relays with terminals less than .75 inch (19.05 mm), and in one plane shall be bent 20° ±5° in one direction, then returned to start; bent in opposite direction 20°±5°, then returned to start. This procedure shall then be repeated in the perpendicular plane. Following these tests, relays shall be examined for evidence of loosening or breaking of the terminals and other damage that could adversely affect the normal operation of the relay; the requirements of 3.29 are not applicable.

4.8.13 Magnetic interference (when specified, see 3.1 and 3.18). The relay under test and eight similar relays shall be mounted in the same physical orientation by nonmagnetic means, as shown on figure 8. Unless otherwise specified, grid-spaced relays shall be mounted so that all terminals are positioned in the closest possible grid pattern. Unless otherwise specified, the spacing between terminals and tops of adjacent terminals shall be as shown on figure 8. Pickup, hold, dropout, turn-on, and turn-off voltages shall be measured on the relay under test as specified in 4.8.7.2, 4.8.7.4, and 4.8.7.5 with the coils of the eight outer relays energized at rated voltage (the magnetic polarity of each relay shall be similarly oriented). This measurement shall be repeated with the coils of the eight outer relays de-energized.

4.8.14 Coil life (unless otherwise specified, see 3.1) (see 3.19). Relays shall be tested for 1,000 hours as follows (see figure 9).

a. Relays may be mounted as specified in 4.3.6. Each contact terminal shall be connected as specified in 4.8.7.1.1.a.

b. During the maximum temperature portion of the test, rated coil supply voltage (see 3.1) shall be applied continuously and at least half of the normally open contacts shall carry rated current. During room temperature and minimum temperature exposures, the coil circuit shall be de-energized and contacts shall not be loaded. Ambient temperatures shall be varied as shown on figure 9, with heating and cooling rates not to exceed +1°C per second average. The portion of the cycle run at minimum temperature shall be approximately 10 percent of the test cycle time.

c. After the first 100 hours, and while still at the low temperature extreme, contact resistance (or voltage drop) and turn-on and turn-off time shall be measured as specified in 4.8.7.1 and 4.8.7.6 and the values shall be recorded. Measurements of coil current as specified, and contact resistance as specified in 4.8.7.3 and 4.8.7.1, shall be taken at room temperature initially, then again after 250 ±25, 500 ±25, and 750 ±25 hours and the values shall be recorded. Pickup, hold, dropout, turn-on voltage or current, and turn-off voltage measurements shall be made as specified in 4.8.7.2, 4.8.7.4, and 4.8.7.6, respectively during the last temperature cycle after allowing the relay to stabilize, deenergized at each of the temperature extremes, and the values shall be recorded.

d. After the relay(s) have been subjected to the coil life temperature cycles, measurements shall then be taken at room temperature of dielectric withstanding voltage, insulation resistance, contact resistance (or contact voltage drop), coil current, turn-on and turn-off time, and contact bounce as specified in 4.8.6.1, 4.8.5, 4.8.7.1, 4.8.7.3, 4.8.7.6, and 4.8.7.7, respectively. Relays shall then be examined for evidence of damage.

e. Following the test, the coil current or resistance, as applicable, shall be measured in accordance with 3.12.3 and shall be as specified (see 3.1).

0.100, grid pin pattern

TO-5, round pin pattern

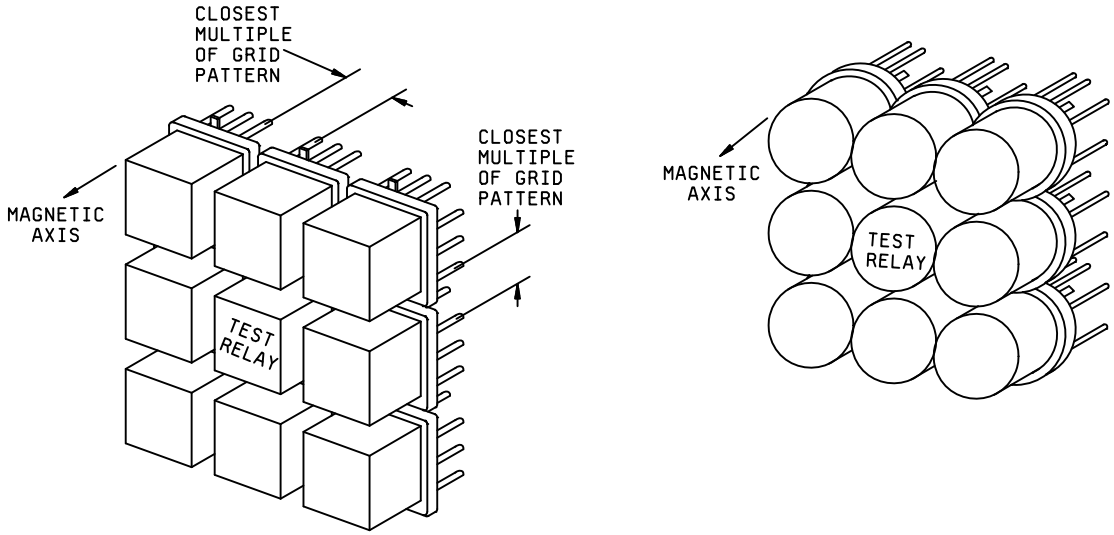

FIGURE 8. Mounting arrays for adjacent similar relays.

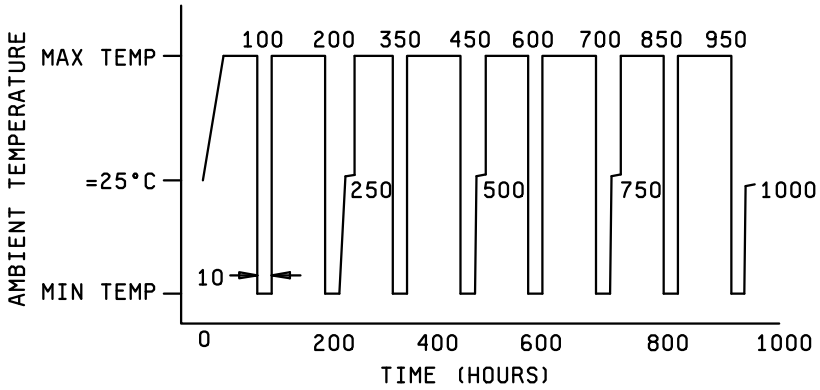

FIGURE 9. Ambient temperatures.

4.8.14.1 Coil endurance (see 3.19.1). Relays shall be tested for 114 hours minimum as follows:

a. The coil current shall be tested in accordance with 3.12.3 prior to testing and shall be as specified (see 3.1).

b. Relays may be mounted as specified in 4.3.5. Each contact terminal shall be connected as specified in 4.8.7.1.1.a.

c. The test chamber shall be controlled to maintain the maximum specified ambient temperature (see 3.1).

d. Apply the maximum coil voltage (see 3.1) at a cycling rate of 4 ±.4 seconds on and 2 ±.2 seconds off for 114 hours minimum.

e. Following the test, the coil or coil resistance shall be measured in accordance with 3.12.3 and shall be as specified (see 3.1).

4.8.15 Resistance to soldering heat (see 3.20). Relays shall be tested in accordance with method 210 of MIL-STD-202. The following details and exceptions shall apply:

a. Depth of immersion in molten solder: Within .060 ±.020 inch (1.52 ±0.51 mm) of the relay base.

b. Test condition: B.

c. Measurements after test: Insulation resistance, contact resistance (or contact voltage drop), pickup, hold, dropout, turn-on, and turn-off voltage, and coil current shall be measured as specified in 4.8.5, 4.8.7.1, 4.8.7.2, 4.8.7.3, 4.8.7.4, 4.8.7.6 respectively.

d. Examination after test: As specified in 4.8.9e.

4.8.16 Salt spray or salt atmosphere (corrosion) (see 3.21). Relays shall be tested as specified in 4.8.16.1 or, when specified (see 3.1), in accordance with 4.8.16.2.

4.8.16.1 Salt spray, MIL-STD-202 (see 3.21). Unless otherwise specified, relays shall be tested in accordance with method 101 of MIL-STD-202. The following details and exceptions shall apply:

a. Applicable salt solution: 5 percent.

b. Test condition: B.

c. Examination after test: Relays shall be examined for evidence of peeling, chipping, blistering of the finish, and exposure of base metal due to corrosion that can adversely affect the operation or performance of the relay.

4.8.16.2 Salt atmosphere (corrosion), MIL-STD-750-1 (when specified, see 3.1). Relays shall be tested in accordance with method 1041 of MIL-STD-750-1. The following detail shall apply: Examination after test: As specified in 4.8.16.1c.

4.8.17 Overload (applicable to high level relays only) (see 3.22). Relay contacts (both normally open and normally closed) shall be subjected to the tests specified in 4.8.17.1 through 4.8.17.2, as applicable. For double-throw relays, separate tests shall be performed for the normally open and the normally closed contacts. Relay coil energization shall be nonsynchronous with the power supply for ac loads. The number of cycles shall be 100 for dc contact loads, and 200 for ac contact loads ("on" and "off" times shall be approximately equal). The coil circuit shall be energized at rated voltage. Overload current shall be twice the rated load current. The opening and closing of all contacts under test shall be continuously monitored to detect switching of the contacts. The equipment shall be capable of monitoring 40 percent minimum of the actual opened and closed time of each contact. The equipment shall automatically cut off when a failure occurs, or shall record any failures. The relay case shall be connected to system-ground through a normal-blow fuse rated at 5 percent of the test current or 100 mA, whichever is greater. After the test, the fuse shall be tested for electrical continuity.

4.8.17.1 Resistive load. Suitable noninductive resistors shall be used. Cycling rate shall be 20 ±2 cycles per minute (cpm).

4.8.17.2 Inductive load. Cycling rate shall be 10 ±1 cpm. Inductive load testing should be performed as recommended by MIL-HDBK-338 and approved by the qualifying activity.

4.8.17.2.1 Inductive load, dc. Unless otherwise specified (see 3.1), dc inductive loads shall be computed in accordance with the following procedure:

a. The relay shall be mounted in its normal operating position on a nonmagnetic plate with no immediately adjacent metal.

b. The load circuit shall be energized through a bounce free contact from a power supply regulated to within 5 percent of the specified rated voltage as shown on figure 10.

c. By measuring the time for the current to reach 63 percent of its final value, the dc inductance is calculated as:

$$L = Rt$$

Where:

L is the inductance in henries,
R is the resistance of the load circuit, and
t is the time in seconds for current to reach 63 percent of its final value.

4.8.17.2.2 Inductive load, ac. The load shall consist of inductive and resistive elements with 0.7 ±0.05 lagging power factor at the voltage and frequency specified (see 3.1).

4.8.18 Life (see 3.23 and 6.10). Unless otherwise specified (see 3.1), relays shall be operated for 100,000 cycles with contacts loaded in accordance with 4.3.3 and 4.8.18.1 through 4.8.18.4, as applicable. Relay coil energization shall be nonsynchronous with the power supply for ac loads. Each relay case shall be connected to system ground through an individual normal-blow fuse rated at the greater of 100 mA or 5 percent of load current. The ambient temperature of the interior of the test chamber shall be +125°C minimum. The contact resistance or voltage drop, as applicable, shall be monitored during 40 percent minimum of each "on" and each "off" period. The monitoring equipment shall automatically hold the relay under test in the state in which the failure occurs (energized or de-energized) and the contact voltage shall be removed. All contacts in each sample unit shall switch identical loads. Following cycling, the electrical continuity of each case-grounding fuse shall be checked.

4.8.18.1 Resistive load. Cycling rate shall be 20 ±2 cycles per minute. Suitable resistors shall be used. Current shall be rated resistive current as specified (see 3.1).

4.8.18.2 Inductive load. Cycling rate shall be 10 ±1 cycles per minute with approximately equal "on" and "off" periods. Current shall be rated current. Appropriate inductive load components (see 4.8.17.2.1 and 4.8.17.2.2, as applicable) shall be used. A suitable resistor may be placed in the circuit to obtain rated steady-state current flow. Inductive load testing should be performed as recommended by MIL-HDBK-338 and approved by the qualifying activity.

4.8.18.3 Lamp load. Unless otherwise specified, the lamp load shall be performed with a 28 V dc power supply voltage. Either lamps or simulated loads may be used to provide the load as follows:

a. Simulated loads shall subject the relays to making 12 times the rated lamp load and breaking the rated lamp load. The duration of the 12 times inrush shall be 0.015 to 0.020 second. The total "on" time shall be 5 ±0.05 seconds and the "off" time shall be 5 ±0.05 seconds.

b. Lamps shall be screened to verify a minimum initial cold inrush of 12 times the rated lamp load. Only lamps meeting this requirement shall be used to provide load to the relays. The total "on" time shall be 2 ±0.05 seconds and the "off" time shall be 7 ±2 seconds.

4.8.18.4 Low level load. The minimum cycle time shall be 10X the sum of the maximum turn-on and turn-off (see 3.1) times for the relay under test. Each contact load shall be 10 to 50 µA at 10 to 50 mV (dc or peak ac). The coil circuit shall be energized at rated coil supply voltage during 50 ±10 percent of each operation. Example: 10 x 8 ms = 80 ms which would be a maximum of 12.5 cycles (one opening and one closure of a set of contacts) per second.

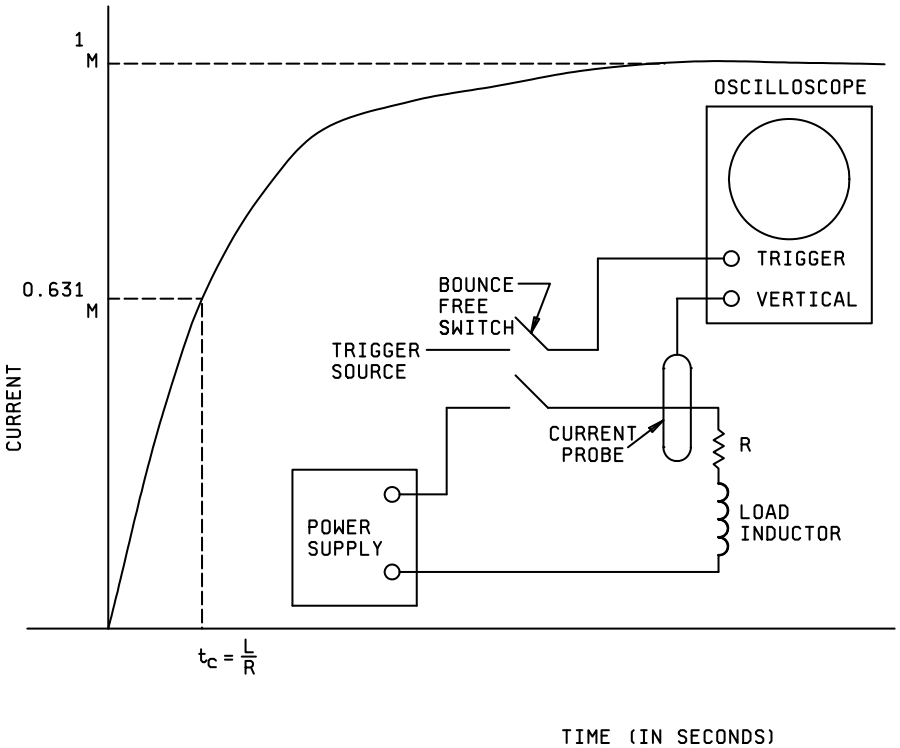

FIGURE 10. DC inductive load (inductive current rise time curve).

4.8.19 Intermediate current (see 3.24). Intermediate current shall not be considered a low level or high level contact load rating (see 6.1.1). Relays shall be tested as specified in method 312 of MIL-STD-202. The following details and exceptions shall apply:

a. Maximum contact resistance: As specified in 3.24.

b. Coil circuit energizing voltage: Rated coil circuit supply voltage (see 3.1).

c. Cycling rate: 10 ±2 cycles per minute with minimum of 75 percent coil "on" time.

d. Contact current/voltage: 100 mA at 28 V dc.

e. Monitoring: At least 40 percent of the closed time of each contact during each operation shall be monitored for contact resistance.

f. Number of cycles: 50,000 cycles.

g. Ambient temperature: +125°C minimum.

4.8.20 Mechanical life (see 3.25). Relays shall be cycled one million cycles at room ambient temperature. The cycling rate shall be as specified in 4.8.18.4. Each contact load shall be 10 to 50 µA at 10 to 50 mV (dc or peak ac). The coil circuit shall be energized at rated voltage during 50 ±10 percent of each cycle. Mechanical life cycles shall not be used for failure rate determination or maintenance.

4.8.21 Resistance to solvents (see 3.26). Relays shall be tested in accordance with method 215 of MIL-STD-202. The following details and exceptions shall apply:

a. Portion to be brushed: All marking.

b. Optional procedure for solvent d is not applicable.

c. Specimens to be tested: One sample shall be tested with each solvent solution. For qualification inspection, samples in excess of the available number of solvents shall be exempt from test. For group C testing, two additional samples shall be selected. The additional samples may be electrical rejects from group A2.

d. Examination: Specimens shall be examined for legibility of marking.

4.8.22 Voltage transients (see 3.27). Samples shall be subjected to the transient susceptibility tests as follows. Rated supply voltage shall be applied to the relay coil circuit. For a period of 60 seconds minimum at 10 ms +1 ms intervals, repetitively apply on the input, a voltage transient pulse with an amplitude as specified in 4.8.22a and 4.8.22b and a pulse duration of 100 µs ±10 µs. Rise/fall time of pulse leading edge shall be 1 µs maximum with overshoots not to exceed 5 percent. Contacts shall be monitored by an acceptable means approved by the qualifying activity. The contact loads shall be 10 mA maximum at 6 V dc maximum or peak ac. The pulse amplitude shall be as shown on figure 11.

a. Specified turn-off voltage shall be applied. A series of transient voltage pulses with amplitude equal to the maximum control signal voltage, or an equivalent voltage to produce the maximum control signal current, as applicable, shall then be applied (see figure 11, configuration A). The relay contacts shall not change state.

b. Specified turn-on voltage, or an equivalent voltage to produce the specified turn-on current, as applicable, shall be applied. A series of transient pulses with voltage amplitude equal to -2.0 V dc ±0.1 V dc shall then be applied (see figure 11, configuration B). For FET driven hybrid relays, a current limiting resistor may be used. The relay contacts shall not change state.

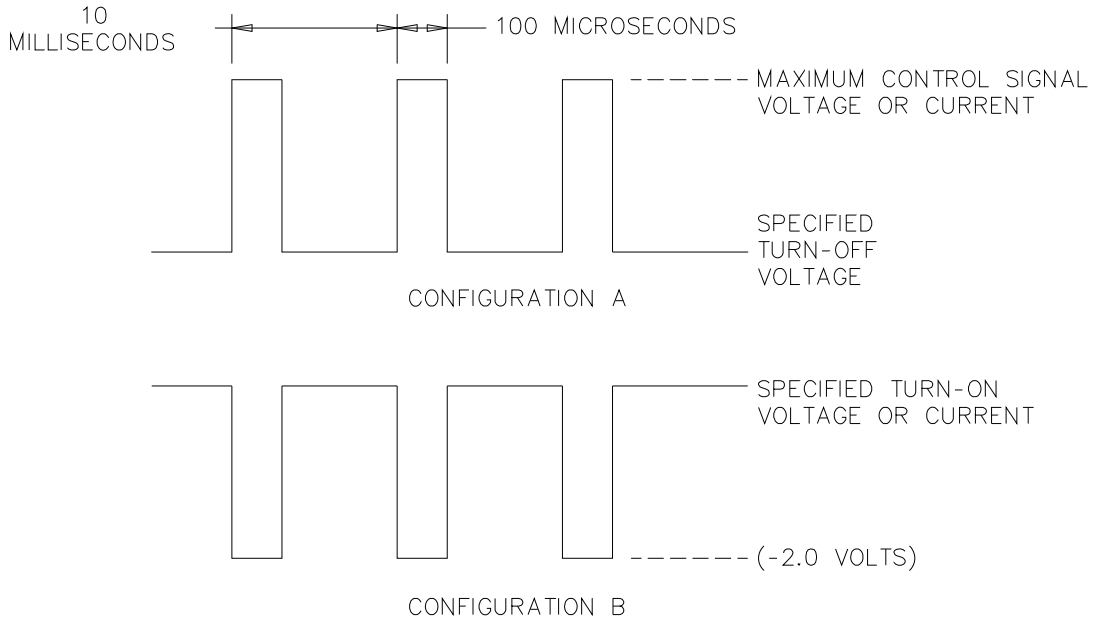

FIGURE 11. Voltage transients test waveforms.

5. PACKAGING

5.1 Packaging. For acquisition purposes, the packaging requirements shall be as specified in the contract or order (see 6.2). When packaging of materiel is to be performed by DoD or in-house contractor personnel, these personnel need to contact the responsible packaging activity to ascertain packaging requirements. Packaging requirements are maintained by the Inventory Control Point's packaging activities within the Military Service or Defense Agency, or within the military service's system commands. Packaging data retrieval is available from the managing Military Department's or Defense Agency's automated packaging files, CD-ROM products, or by contacting the responsible packaging activity.

6. NOTES

(This section contains information of a general or explanatory nature that may be helpful, but is not mandatory.)

6.1 Intended use. Relays conforming to this specification are intended for use in electronic and communication equipment. Their principal areas of application are for aircraft, missiles, spacecraft and ground-support electronic and communication equipment.

CAUTION: The use of any coil voltage less than the rated coil voltage will compromise the operation of the relay.

6.1.1 Contact rating. The contact ratings of relays covered by this specification are based on load endurance tests which establish the relay capability to switch rated loads. For the purposes of this specification, contact load ratings are defined as follows:

a. Low level: 10 µA at 50 mV to 10 mA at 6 V.

b. Intermediate: 10 mA at 6 V to 100 mA at 28 V.

c. High level: Above 100 mA at 28 V.

6.1.2 Failure rate level. Failure rate level (percent per 10,000 cycles) as specified in table I, is based on an average of 10 cycles per hour, per application, for 1,000 hours in accordance with MIL-STD-690.

6.2 Acquisition requirements. Acquisition documents must specify the following:

a. Title, number, and date of the specification.

b. If required, the specific issue of individual documents referenced (see 2.1).

c. Packaging requirements (see 5.1).

d. Marking requirements for failure rate level (see 3.28 and MIL-STD-690).

6.2.1 Manufacturer provided services. The manufacturer may provide the following optional value added services when specified in the purchase order:

a. Hot solder dipping of terminals (see 3.5.7).

b. Shortening of wire leads (see 3.5.7.2).

6.3 Qualification. With respect to products requiring qualification, awards will be made only for products which are, at the time of award of contract, qualified for inclusion in Qualified Products List QPL No. 28776 whether or not such products have actually been so listed by that date. The attention of the contractors is called to these requirements, and manufacturers are urged to arrange to have the products that they propose to offer to the Federal Government tested for qualification in order that they may be eligible to be awarded contracts or orders for the products covered by this specification. Information pertaining to qualification of products may be obtained from (Passive Devices Team, P.O. Box 3990, Columbus, OH 43218-3990, vqp.arw@dla.mil or vqp.kr@dla.mil). An online listing of products qualified to this specification may be found in the Qualified Products Database (QPD) at https://assist.dla.mil.

6.3.1 Qualification and maintenance by similarity. This information is for reference only. Refer to the individual specification sheets for detailed information.

6.3.1.1 Qualification by similarity. The graphic guide shown illustrates the relative complexity of individual specification sheets within a style group for use in determining qualification inspection (reduced testing) candidate specification sheets. Arrow direction indicates flow towards less complex designs. Asterisk indicates most complex design of style group.

T0-5, round pin pattern:

```
*/3 ————————> /4 ————————> /5
 |
 ——> /1
```

0.100 grid pin pattern:

```
*/7 ————————> /6
```

6.3.1.2 Maintenance by similarity. The information accumulated for the style groups listed below may be combined for group B and C inspections maintenance and extension of failure rate levels in accordance with MIL-STD-690. Testing samples must be representative of production. Maintenance plan is contingent upon qualifying activity approval. Failures exceeding the sampling plan selected (C = number), regardless of the specific specification sheet affected, affect all other specification sheets within the respective style group.

a. T0-5, round pin pattern: /1, /3, /4, /5.

b. 0.100, grid pin pattern: /6, /7.

6.4 Tin whisker growth. The use of alloys with tin content greater than 97 percent, by mass, may exhibit tin whisker growth problems after manufacture. Tin whiskers may occur anytime from a day to years after manufacture and can develop under typical operating conditions, on products that use such materials. Conformal coatings applied over top of a whisker-prone surface will not prevent the formation of tin whiskers. Alloys of 3 percent lead, by mass, have shown to inhibit the growth of tin whiskers. For additional information on this matter, refer to ASTM-B545 (Standard Specification for Electrodeposited Coatings of Tin).

6.5 PIN. This specification requires a PIN that describes codification and/or classification and appropriate references to associated documents (see 1.2 and 3.1).

6.6 Sealing. The following procedure is suggested as a guide; however, every effort should be made to utilize the most effective procedure consistent with the state of the art.

a. Evacuate to less than 200 microns.

b. Heat to maximum rated ambient temperature with continued evacuation (see 3.1).

c. Maintain heat and vacuum for 12 hours or longer, continuing the treatment until a maximum pressure of 80 microns is reached.

d. Turn off heaters and maintain pressure for 4 hours.

e. Close evacuation valve and fill chamber with the desired pressurizing gas.

f. Seal relay before removing from chamber.

6.7 Intermetallic contact. The finishing of metallic areas to be placed in intimate contact by assembly presents a special problem, since intermetallic contact of dissimilar metals results in electrolytic couples which promote corrosion through galvanic action. To provide the required corrosion protection, intermetallic couples are restricted to those permitted by MIL-STD-889.

6.7.1 Tin plated finishes. Use of tin plating is prohibited (see 3.4.1a). Use of tin finishes can result in tin whisker growth. Tin whisker growth can result in adverse effects on the operation of electronic equipment systems. For additional information on this matter, refer to ASTM B545 (Electrodeposited Coating of Tin).

6.8 Fixturing losses. It is known that there is inherent resistance in sockets, wiring, etc.. The qualifying activity will evaluate the manufacturer's system to determine conformance to specification requirements.

6.9 Environmentally preferable material. Environmentally preferable materials should be used to the maximum extent possible to meet the requirements of this specification. As of the dating of this document, the U.S. Environmentally Protection Agency (EPA) is focusing efforts on reducing 31 priority chemicals. The list of chemicals and additional information is available on their website at http://www.epa.gov/osw/hazard/wastemin/priority.htm. Included in the list of 31 priority chemicals are cadmium, lead, and mercury. Use of the materials on the list should be minimized or eliminated unless needed to meet the requirements specified herein (see section 3).

6.10 Glossary. The definitions listed below are not a complete glossary of relay terminology, but rather are intended as definitions of the technical terms as applied within the specification.

Adjunct sealant: Any hydrocarbon or silicone material used on the exterior of the unit to improve the hermeticity of a hermetically sealed relay.

Bifilar winding: Two or more windings with the wire of each winding alongside the other, matching turn for turn; may be either inductive or noninductive.

Bounce time: The interval between first make of the contact until the uncontrolled making and breaking of the contact ceases.

Chatter, contact: The undesired opening of mating contacts resulting from uncompensated ac operation, or from external shock and vibration.

Coil: One or more windings of a common form.

Contacts: The current-carrying parts of a relay that open or close electrical circuits.

Contact, bifurcated: A forked or branched, contacting member so formed or arranged, as to provide dual contacting.

Contact, closed: A normally-closed contact with the relay released is a closed contact. A normally-open contact with the relay operated is a closed contact.

Contact, open: A normally-closed contact with the relay operated is an open contact. A normally-open contact with the relay released is an open contact.

Contact arrangement: The combination of contact forms that make up the entire relay switching structure.

Contact bounce: Intermittent opening of contacts after initial closure due to contact impact.

Contact force: The force exerted by a movable contact against a mating contact when the contacts are closed.

Contact gap: The distance between a pair of mating relay contacts when the contacts are open.

Contact weld: A contact failure due to fusing of closed contacts, resulting in their failure to open.

Control signal: A voltage or current applied to the relay input and used to control (turn-on and turn-off) the hybrid relay.

Current or voltage, rated coil supply: The coil current or voltage at which the relay is to operate and meet all specified electrical, mechanical, and environmental requirements.

Cycle, relay: A relay cycle is defined as a relay pickup and dropout, (one opening and one closure of a set of contacts). Therefore, a cycle consists of two operations.

Degassing: A process of thermally cleaning a relay (at elevated temperatures) to drive off harmful gases. Degassing is usually performed using vacuum pumps.

Dropout current or voltage: The current or voltage by which the last contact is to have returned to the unenergized position.

Hermetically sealed relay: A relay contained within an enclosure that is sealed by fusion to insure a low rate of gas leakage. This usually refers to metal-to-metal, or metal-to-glass sealing.

Hold current or voltage: Hold current or voltage is the current or voltage at or above which:

a. The armature is not to move from its operated position, or

b. The normally-open contacts is not to open; the normally-closed contacts is not to close.

CAUTION note: The use of any coil current or voltage less than the rated current or voltage will compromise the operation of the device.

Input: The circuitry within a relay which responds to control signal and causes the relay to turn on (equivalent to "coil" or "winding" in an electromechanical relay).

Miss: Failure to establish the intended circuit conditions (high or low output resistance, as applicable).

Nonoperating current or voltage: The maximum coil current or voltage at which a relay remains in the deenergized condition.

Normally closed contacts: Those contacts that are closed with the relay de-energized.

Normally open contacts: Those contacts that are open with the relay de-energized.

Operation, relay: A relay operation is defined as when a relay changes from an initial condition to the prescribed condition. For example, normally open to closed or vice versa. Therefore, a relay operation is one-half of a cycle.

Output: The circuit within a relay which controls an external load circuit and is changed from a conducting to a nonconducting state (and vice versa) by the relay operation.

Pickup current or voltage: The current or voltage at which the last normally-open contact closes.

Saturation: The condition attained in a magnetic material when an increase in magnetizing (coil) current produces no appreciable increase in flux.

Shelf life: A period of time a relay can be stored unused before detrimental changes occur which would cause the item not to properly perform its function within the requirements of this specification.

Silicone: Any of a group of semi-inorganic polymers based on the structural unit R_2 SiO, where R is an organic group, characterized by wide range thermal stability, high lubricity, extreme water repellency, and physicochemical inertness, used in adhesives, lubricants, protective coatings, paints, electrical insulation, synthetic rubber, and prosthetic replacements for bodily parts.

Spacer mounting pad: Permits the relay to be spaced away from the mounting surface facilitating solder joint inspection.

Spreader mounting pad: Permits the relay leads to be formed to a specified dimensional pattern.

Supply voltage: The voltage source that supplies power to drive the relay coil. It may also be used to supply standby power to the solid state circuitry.

Time, contact bounce: The time interval from initial closure of a contact to the end of bounce during pickup, and dropout.

Time, operate: The time interval from coil energization to initial closure of the last open contact. Unless otherwise stated, it does not include contact bounce time.

Time, release: The time interval from coil de-energization to initial closure of the last open contact. Unless otherwise stated, it does not include bounce time.

Time, transfer: The time interval between the opening of the closed contact and the closing of the open contact of a break-make-contact combination. For multipole relays, transfer time is defined as the interval between the opening of the last closed contact and the closing of the first open contact of any set.

Time, turn-on: The interval between the application of control signal and the output reaching 90 percent of its ultimate change in voltage when the relay is turned on.

Time, turn-off: The interval between the removal of control signal and the output reaching 90 percent of its ultimate change in voltage when the relay is turned off.

Turn-on: The change in relay condition caused by the control signal exceeding a predetermined (minimum turn-on voltage) resulting in the output changing from a nonconducting to a conducting state (or vice versa) (equivalent to "energize", "operate", or "pick-up" in an electromechanical relay).

Turn-off: The reversion of the relay from the operated (turn-on) to unoperated (turn-off) state as a result of control signal being below a predetermined (maximum turn-off voltage) value (equivalent to "drop-out", "deenergize", or "release" in an electromechanical relay).

Voltage, rated coil supply: The coil supply voltage at which the relay is to operate and meet all specified electrical, mechanical and environmental requirements.

6.11 Subject term (key word) listing.

Hermetically sealed
Low level contact rating
Spreader mounting pad
TO-5
Transistor driven
Turn-on time

6.12 Changes from previous issue. Marginal notations are marked with vertical lines to indicate where changes from the previous issue were made. This was done as a convenience only and the Government assumes no liability whatsoever for any inaccuracies in these notations. Bidders and contractors are cautioned to evaluate the requirements of this document based on the entire content irrespective of the marginal notations and relationship to the previous issue.

6.13 Shelf-life. This specification covers items where shelf life is a consideration. Specific shelf-life requirements should be specified in the contract or purchase order. The shelf-life codes are contained in the Federal Logistics Information System Total Item Record. Additive information for shelf-life management may be obtain from *DoD 4140.27-M Shelf-life Management Manual*, or the designated shelf-life Points of Contact (POC). The POC should be contacted in the following order: (1) the Inventory Control Points and (2) the DoD Service and Agency administrators for the DoD Shelf-Life Program. Appropriate POCs for the DoD Shelf-Life Program can be contacted through the DoD Shelf-Life Management website: https://www.shelflife.hq.dla.mil/.

Custodians:
Army - CR
Navy - EC
Air Force – 85
DLA - CC

Review activities:
Army - CR4, MI
Navy - AS, MC, OS
Air Force – 19

Preparing activity:
DLA - CC

(Project 5945-2014-014)

NOTE: The activities listed above were interested in this document as of the date of this document. Since organizations and responsibilities can change, you should verify the currency of the information above using the ASSIST Online database at https://assist.dla.mil/.