METRIC

MIL-PRF-24623/7A
03 July 2013
SUPERSEDING
MIL-PRF-24623/7
27 August 2010

PERFORMANCE SPECIFICATION SHEET

SPLICE, MECHANICAL, SIMPLEX FIBER OPTIC CABLE, AIRCRAFT

This specification is approved for use by all Departments
and Agencies of the Department of Defense

The requirements for acquiring the product described herein
shall consist of this specification sheet and MIL-PRF-24623.

SCOPE: The performance requirements specified herein cover mechanical splices suitable for military aircraft use with single fiber (simplex) optical cables containing either multimode or single mode optical fibers.

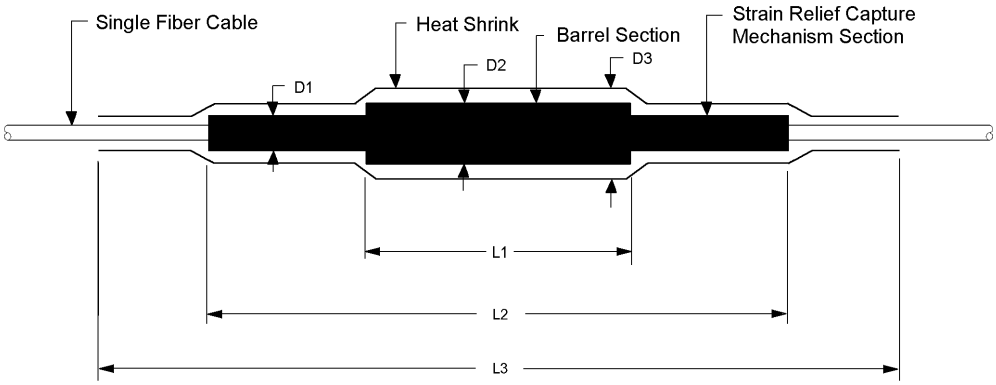

ENVELOPE DIMENSIONS

Designation	Description	Dimension (max)	
		(mm)	(inch)
D1	maximum diameter of strain relief capture mechanism section	4/	4/
D2	maximum diameter of barrel (body) section	7.0	0.28
D3	maximum diameter of barrel section with heat shrink applied	8.0	0.31
L1	maximum length of barrel (body) section	40.0	1.59
L2	maximum length of mechanical splice (strain relief capture mechanism – from one end to other end)	57.0	2.25
L3	maximum length of mechanical splice with heat shrink applied (one end of heat shrink to other end)	89.0	3.50

NOTES:
1. Dimensions are in millimeters.
2. Inch equivalents are given for general information only.
3. Minimum splice length is preferred.
4. Dimension D1 is defined in terms of diameter compatibility with the crimp tool (see “Cable strain relief capture mechanism”).
5. Maximum dimension of heat shrink specified is before shrinkage. Length of heat shrink provided (before shrinkage) shall not be less than 70 mm (2.75 in).

FIGURE 1. Mechanical splice, single fiber cable, aircraft.

Part or identifying number (PIN): See table I and 6.6 of MIL-PRF-24623.

M	24623	/7	-XXXX
Prefix	Basic specification	Specification sheet	SICC code (see table I)

TABLE I. Splice Identification Color Coding (SICC) numbers and insertion loss for specified optical fiber sizes.

Fiber size (core/cladding) microns (um)	SICC		Insertion loss 1/	
	Style 1	Style 2	Initial (dB)	Verification (dB) 3/
Single mode < 9/125 2/	1050	2050	0.5	1.0
Single mode 9/125 2/	1090	2090	0.5	1.0
50/125, 62.5/125	1500	2500	0.5	1.0
100/140 4/	1100	2100	0.5	1.0
62.5/125/153	1621	2621	0.5	1.0
100/140/172 4/	1101	2101	0.5	1.0

NOTES:

1/ Optical loss performance is based on use of specified fabrication procedure.
2/ Applicable to any single mode core size. Also applicable to any multimode core size when enhanced performance is required and cladding tolerances permit.
3/ Insertion loss verification is an insertion loss performed after a series of environmental tests or mechanical tests.
4/ Mechanical splices with the larger core diameters are intended primarily for legacy systems.

REQUIREMENTS:

Temperature ranges:

Operating: -55°C to +165°C (-67°F to 329°F)

Non-operating: -40°C to + 85°C (-40°F to 185°F)

Storage: -40°C to +85°C (-40°F to 185°F)

Design and construction: The mechanical splice shall be of the construction, weight, and physical dimensions/footprint (see figure 1) specified herein.

Cable diameter range. Mechanical splice design shall accommodate a single fiber cable with a minimum diameter of 1.7 mm (.067 inch) and a maximum diameter of 2.2 mm (.087 inch).

Strength member: The strength member shall be a yarn. Yarn used in fiber optic cables for this application is limited to aramid yarn and fiber glass.

Cable assembly procedure. Test sample configurations and fabrication shall be performed as specified in MIL-STD-1678-4 Requirement 4014. Equivalent fabrication procedure may be used if approved by the qualifying activity prior to test sample preparation. Mechanical splice shall meet the requirements of this specification when terminated using the procedures specified.

Cable strain relief capture mechanism. A capture mechanism, outside and at each end of the mechanical splice barrel (body), using a crimp sleeve shall be used to affix the cable strength member to the mechanical splice. Cable strain relief capture mechanism shall not interfere with intended optical performance and mechanical protection of the optical fiber, or with the functionality of the cable harness (see tables I and II). The mechanical splice shall meet all the requirements when the crimp sleeve is assembled to the mechanical splice using a crimp tool. The crimp die shall not contain an optional protrusion on either the upper and lower die. Crimp sleeve to be supplied with the mechanical splice as part of the PIN.

Air gap prevention. A means shall be incorporated into the mechanical splice to prevent an optical mismatch in the refractive index at the fiber-to-fiber interface. When index matching material is used to satisfy this requirement, the index matching material shall be in accordance with MIL-PRF-24794 and shall be preloaded into the mechanical splice.

Fiber interface (bonding and refractive index).

Style 1 (bonded): A bonding agent shall be used to hold the optical fibers in place. The bonding agent shall be preloaded into the mechanical splice. The design shall be such to restore the environmental and mechanical integrity to that of coated optical fiber with minimal impact to optical performance. Bonding agent shall conform to MIL-PRF-24792, MIL-PRF-24793 or other bonding agent approved by the qualifying activity. Means to prevent an air gap shall be employed.

Style 2 (non-bonded): Means to prevent an air gap shall be employed.

Bonding agent cavity access. Mechanical splice, that contains a bonding agent, shall allow access to and removal/replacement of the cavity assembly containing the bonding agent. Spare cavity assemblies shall be available for sale (to account for the situation of the bonding agent reaching shelf life expiration prior to mechanical splice installation).

Refractive index material cavity access. Mechanical splice, that contains a refractive index material, shall allow access to and removal/replacement of the cavity assembly containing the refractive index material. Spare cavity assemblies shall be available for sale (to account for the situation of the refractive index material reaching shelf life expiration prior to mechanical splice installation).

Heat shrink. Heat shrink shall be in accordance with heat shrinkable insulation sleeving, SAE AMS-DTL-23053/5 electrical, polyolefin, flexible, crosslinked, FSC 5970. Heat shrink shall be supplied as part of the PIN.

Cleaver compatibility requirement. The mechanical splice shall be able to accept a range of cleaved bare fiber insertion lengths from 8 to 20 mm in increments of 1 mm.

Markings:

In addition to the identification markings specified in MIL-PRF-24623 paragraph 3.5.4, each mechanical splice packaging shall list the expiration date of the bonding agent, refractive index material, or the first to expire if both are preloaded.

Tooling:

Termination. The tooling used to terminate the mechanical splices to this specification shall meet all the requirements of MIL-STD-1678-4 Requirement 4014.

Cleaver. Cleaver shall be adjustable to provide cleaved bare fiber insertion lengths from 8 to 20 mm in increments of 1 mm.
Crimp tool. Crimp tool shall conform to the requirements specified for the mechanical splice cable strain relief capture mechanism.

Curing ovens. A means shall be provided to secure the cables and mechanical splice meeting the dimensions in figure 1 in-place for the curing process that prevents fiber movement.

Epoxy cure. Where epoxy is used, the curing oven shall be configured to set the curing temperature profile and have a feedback system to regulate the set point temperature. At a minimum, curing oven shall function and shall be programmable over temperature range and with cure cycle specified in MIL-STD-1678-4 Requirement 4014.

UV adhesive cure. UV source used to cure the UV adhesive shall be configured with an enclosed light source, deliver the specified total dose of UV intensity and have a feedback system to ensure total UV dose delivery and, if required, compensate for ambient temperature. At a minimum, curing oven shall have the function (feature) to be settable for total UV dose and to stop the cure once a preset total UV dose is delivered. Range of settable total UV dose shall be from 0.1 Joules/sq-cm to 10.0 Joules/sq-cm in increments of 0.1 Joules/sq-cm. Wavelength of UV light shall be within the long wave ultraviolet region of 340 to 380 nm.

Shelf life ultraviolet curable epoxy.
Un-terminated mechanical splices that will later undergo the Group 1 optical inspection shall first undergo a high temperature soak followed by a low temperature soak (i.e., two constant temperature exposures). The un-terminated mechanical splices shall be tested at 71^{0}C (160 ^{0}F) for a duration of 336 hours (14 days). Next the un-terminated mechanical splices shall be tested at -40^{0}C (-40^{0}F) for a duration of 4 hours (0.17 days). The rate of temperature change from ambient to each soak temperature and return shall not exceed 3^{0}C (5 ^{0}F) per minute. Once these two temperature soaks have been performed, the mechanical splices shall be assembled and tested for insertion loss and, if applicable, return loss. The mechanical splice shall meet the optical performance requirements when tested for insertion loss and, if applicable, return loss. Assembly shall be performed at 25°C (77° F) and 55 percent RH. A post test visual examination of the test specimens shall reveal no leakage of adhesive/epoxy

or apparent loss of sealing capability, nor any damage detrimental to the operation of the test specimens.

QUALIFICATION INSPECTIONS

Inspections and sequence shall be performed as listed in table II.

TABLE II. Qualification inspections.

Test sample configuration	Test performed	Type 1 cable			Type 2 cable		Type 3 cable	
		SM	MM	MM100	MM	MM100	SM	MM
Un-terminated mechanical splice [1/]								
	Size	X	X	X	X	X	X	X
	Weight	X						
	Identification markings	X						
	Workmanship	X						
	Fungus resistance	X						
	Ozone exposure	X						
	Shelf life ultraviolet curable epoxy	X	X	X	X	X	X	X
Mechanical splice as part of single fiber cable assembly [2/]								
Group 1								
Optical [3/]	Insertion loss (initial)	X		X	X	X	X	
	Return loss	X			X		X	
Group 2								
Mechanical tests [4/]	Cable seal flexing	X				X		
	Twist	X		X		X	X	
	Impact	X				X		
	Crush	X				X		
	Insertion loss (verification)	X				X	X	
	Return loss	X					X	
Group 3								
Environmental tests [5/]	Thermal shock	X				X	X	
	Temperature/humidity cycling	X				X		
	Temperature cycling	X				X	X	
	Altitude immersion	X				X		
	Temperature life	X				X	X	
	Insertion loss (verification)	X				X	X	
	Return loss	X				X	X	
Group 4								
Material tests	Salt spray [6/]	X				X		
	Modified SO_2/salt spray [6/]	X				X		
	Sand & Dust [7/]	X				X		
	Fluid immersion [7/]	X				X	X	
	Flammability [8/]	X				X	X	
Mechanical splice outside cable harness [2/, 9/]								
	Insertion loss (initial)	X	X			X	X	X
	Return loss	X	X				X	X
	Vibration	X				X		
	Mechanical shock	X	X			X	X	X
	Insertion loss (verification)	X	X			X	X	X
	Return loss	X	X				X	X

See footnotes at top of next page.

TABLE II. Qualification inspections - Continued.

1/ Sample size shall be sufficient to ensure quantity of mechanical splices for inspections as part of a single fiber cable and inspections when outside a cable harness. A minimum of three separate samples (per test) of each polymeric material part that is part of the mechanical splice shall be included for fungus resistance, ozone exposure, and fluid immersion.

2/ Test sample configurations for mechanical splices on single fiber cable and on outside of cable harnesses shall be prepared and used that are in accordance with test sample configuration in MIL-STD-1678-4 Requirement 4014. All three cable types must be tested to meet initial qualification.

3/ A minimum sample size of 32 mechanical splices shall be used from the initial minimum 52 un-terminated mechanical splices for each cable type tested. A minimum of 12 mechanical splices shall be terminated on type 1 cable, a minimum of 12 on type 2 cable and a minimum of 8 on type 3 cable. There are one or more fiber sizes for each cable type listed. Types of cables are identified in tables providing minimum sample sizes to be used for the different test groups are listed in MIL-STD-1678-4 Requirement 4014.

4/ A minimum sample size of 16 mechanical splices shall be used from the group 1 mechanical splices for each cable type tested. A minimum of 8 mechanical splices shall be terminated on type 1 cable, a minimum of 4 on type 2 cable and a minimum of 4 on type 3 cable. Types of cables are identified in MIL-STD-1678-4 Requirement 4014. There are one or more fiber sizes for each cable type listed.

5/ A minimum sample size of 12 mechanical splices shall be used from the group 1 mechanical splices for each cable type tested. A minimum of 4 mechanical splices shall be terminated on type 1 cable, a minimum of 4 on type 2 cable and a minimum of 4 on type 3 cable. Types of cables are identified in MIL-STD-1678-4 Requirement 4014. There is one fiber size for each cable type listed.

6/ A minimum sample size of 8 mechanical splices shall be used from the group 2 mechanical splices. A minimum of 4 mechanical splices shall be terminated on type 1 cable and a minimum of 4 on type 2 cable. For the salt spray test, a minimum of 2 mechanical splices shall be terminated on type 1 cable and a minimum of 2 on type 2 cable. For the modified SO_2 (sulfur dioxide)/salt spray test, a minimum of 2 mechanical splices shall be terminated on type 1 cable and a minimum of 2 on type 2 cable.

7/ A minimum sample size of 12 mechanical splices shall be used from the group 3 mechanical splices. A minimum of 4 mechanical splices shall be terminated on type 1 cable, a minimum of 4 on type 2 cable and a minimum of 4 on type 3 cable. For the sand and dust test, a minimum of 2 mechanical splices shall be terminated on type 1 cable and a minimum of 2 on type 2 cable. For the fluid immersion test, a minimum of 2 mechanical splices shall be terminated on type 1 cable, a minimum of 2 on type 2 cable and a minimum of 2 on type 3 cable. A minimum of three separate samples of each polymeric material part that is part of the mechanical splice shall be included for fluid immersion.

8/ A minimum sample size of 8 mechanical splices shall be used from the group 2 mechanical splices. A minimum of 4 mechanical splices shall be terminated on type 3 cable from the Group 2 mechanical splices. A minimum of 2 mechanical splices shall be terminated on type 1 cable and 2 on type 2 cable from Group 2 samples used previously for sand and dust testing.

9/ A minimum sample size of 20 mechanical splices shall be used from the un-terminated mechanical splices for each cable type tested. A minimum of 8 mechanical splices shall be terminated on type 1 cable a minimum of 4 on type 2 cable and a minimum of 8 on type three cable. There are one or more fiber sizes for each cable type listed.

Inspections for un-terminated mechanical splices.

Test sample configuration. A minimum sample size shall be used to ensure sufficient quantity for mechanical splice inspections as part of a single fiber cable and for mechanical splice inspections as an integral part of a cable harness (see table II).

Size. The dimensions of the splice parts shall be as shown in figure 1 and specified herein.

Weight. The weight of the splice parts shall not exceed 14 gm (0.5 ounce).

Identification marking. The Splice Identification Color Coding (SICC) bands shall be marked on the barrel of the mechanical splice. Manufacturer's symbol or trademark location is in front of the first SICC band. The manufacturer shall list the symbol or trademark with SAE in accordance with SAE AIR 1351.

Ozone exposure. Polymeric connector parts shall be tested to TIA-455-189 and exposed to an ozone concentration of 100 to 150 parts per million at a temperature of 70°C +5°C –0°C and an air velocity not less than 0.6 m/s for two hours. The ozone test apparatus and ozone measuring device shall be in accordance with ASTM-D-1149. If a polymeric part is expanded on the mechanical splice, then the part is to be tested at the same level of expansion. Polymeric materials shall show no evidence of excessive swelling or embrittlement.

Inspections for the mechanical splices as part of a single fiber cable assembly:

Test sample configuration. Each mechanical splice is to be terminated onto the ends of single fiber cables (with other cable ends connectorized for attachment to optical test measurement instrumentation). Cable used, test sample configurations, fabrication methods, and the specific test methods and practices shall be as specified in MIL-STD-1678-4 Requirement 4014. Mechanical splices, selected from the group that underwent inspections for un-terminated termini, shall be used. A minimum sample size as specified in table II shall be used.

Optical performance. The optical tests in table II shall be performed in the sequence listed. The optical measurements shall be performed per the applicable TIA-455 series standards with the exception of adhering strictly to the setup and test procedure specified in the applicable 2100 series Measurements in MIL-STD-1678-2.

Optical source wavelength. Mechanical splices with single mode fiber shall be tested using an optical source at the 1,310 nm wavelength. Multiple fibers (test samples) may not be concatenated for obtaining the optical measurements.

Launch conditions. Launch conditions shall conform to Measurement Support Process of MIL-STD-1678-2.

Insertion loss. The initial insertion loss and the insertion loss verification for the various fiber sizes shall be as specified in table I. The insertion loss limits specified are the maximum allowed values for each measurement. For each cleaved fiber inserted into a mechanical splice that is to undergo an insertion loss measurement, the cleave angle shall be measured by interferometer and the cleave angle determined from the fringe pattern. The cleave angles are to be included with the initial insertion loss data. Each cleave angle shall be less than or equal to three degrees ($\leq 3^{o}$).

Insertion loss (verification). Applicable. If the cutback method is used after the mechanical or environmental tests are concluded, then return loss may be performed prior to the insertion loss verification.

Return loss. Applicable with the following modification. Return loss shall be greater than or equal to 40 dB for mechanical splices on single mode fiber. Return loss shall be greater than or equal to 20 dB for mechanical splices on multimode fiber.

Crosstalk: Not applicable.

Change in optical transmittance: Applicable except that the change in optical transmittance shall be measured during and after the test (from a baseline obtained before each test) per TIA-455-20 for transmitted power adhering strictly to the setup and test procedure specified in Measurement 2102 from MIL-STD-1678-2. Unless otherwise specified the periodicity of the measurement(s) taken during the test, when required, shall be appropriate for the test mentioned and as approved by the qualifying activity.

Ambient light susceptibility. Not applicable.

Mechanical performance. The mechanical tests in table II shall be performed in the sequence listed.

Fiber pull out force. Not applicable (This test is used for mechanical splice configurations with no type of cable strain relief).

Cable pull out force. Not applicable (This test is performed as part of the twist test).

Twist. The clamp/weight secured to the mechanical splice detector end cable shall be rotated 360 degrees at a rate of one cycle per 5 seconds for a total of 50 cycles. One cycle shall consist of a +180, -360, +360 degree twist about the neutral axis. The detector end cable shall be stretched with minimum tension of 4.5 kg or 44.5 N (10.0 pounds) to their maximum lengths and clamped (or other suitable fixture to grip and secure cable) at a distance of 30.5 cm (12 inches) from the fiber end-to-fiber end interface of the mechanical splice to the top of the cable clamp (see figure 2). Once the specified load is obtained, hold this applied tensile load for one minute prior to the first twist cycle. Testing shall be performed only at ambient temperature.

Axial compressive loading. Not applicable.

Crush. Not applicable.

Impact. Mechanical splice shall be tested using a fixture as shown in figure 3 that contains a steel block with a 1.2 cm (.5 inch) minimum thickness. Mechanical splice cabling (both cable ends) shall be secured to a clamp 1.5 meters from the back of the back of the mechanical splice strain relief. With the mechanical splice hanging under its own weight, the mechanical splice shall be at the horizontal and vertical center of the steel block (see figure 3). The mechanical splice is then raised to the height of the clamp, 1.5 m (59 inches), and with the cable extended, released so as to strike the steel block. The test shall consist of 8 drops. The change in optical transmittance shall be performed after the test.

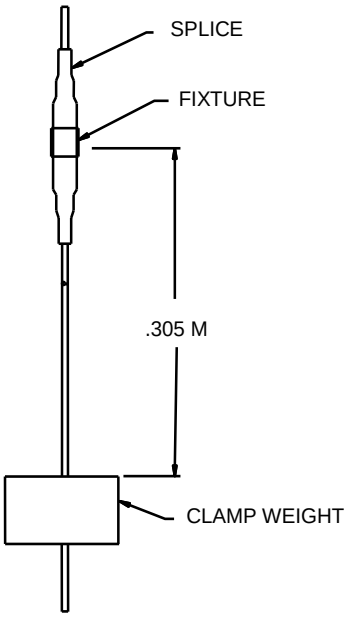

FIGURE 2. Twist test clamping distance.

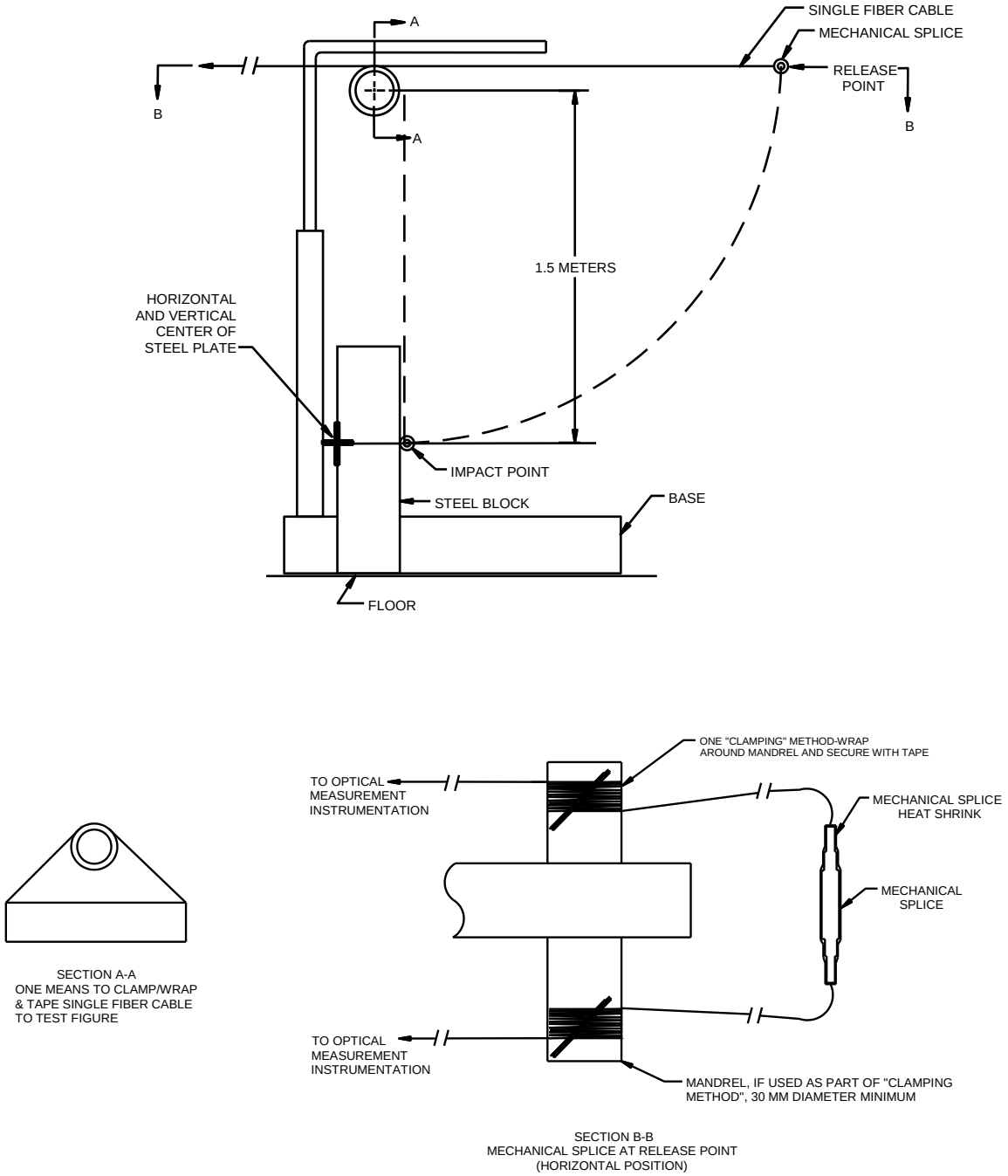

FIGURE 3. Impact test fixture and test setup.

Material performance. The material tests shall be performed per the applicable TIA-455 series or otherwise cited test standards with the exception of adhering strictly to any deviations, constraints or augmentations in the applicable 3400 series Measurements in MIL-STD-1678-3.

Sand and dust. Mechanical splices shall be exposed to blowing dust and sand. Test samples shall be visually examined, after cleaning, at the conclusion of the test. The mechanical splices shall not be rotated during steps 1 and 3 for this test. Each mechanical splice shall be oriented in the chamber such that the longitudinal axis is in line with the oncoming air flow. The mechanical splices shall be affixed in such a manner that the orientation of each mechanical splice does not change throughout the duration of the test. Part 2 of test, 16 hour waiting period (at reduced air flow rate) after raising chamber temperature, shall not be performed. The change in optical transmittance shall be obtained during the 6 hour exposure period of step 1, before step 3, during the 6 hour exposure period of step 3 and after the test.

Salt spray. Test samples (mechanical splices on single fiber cable) shall be tested to TIA-455-16, test condition I (500 hours) with particular attention to MIL-STD-1678-3 Measurement 3402 refinements. No corrosive effects shall be seen on the external mechanical splice parts that would be detrimental to the operation of the mechanical splice. No optical degradation shall occur as a result of this test. The criterion for insertion loss verification shall be used to determine if this optical requirement is met. Insertion loss testing shall be performed both prior to and after the salt spray test.

Modified SO_2/salt spray (fog). Test samples (mechanical splices on single fiber cable) shall be tested in accordance with ASTM G85 with the inclusion of Annex A4. Clean the test samples with reagent grade (> 99 percent pure) isopropyl alcohol prior to the test. Prepare the salt solution as specified in 8.1 of ASTM B117 ensuring proper pH (see 8.2 of ASTM B117). Purity shall be greater than 99 percent of SO_2 gas in cylinder. Verify that test samples are suspended in the chamber at an angle from 6° to 45° from the vertical. Operate the modified SO_2/salt spray (fog) chamber with a constant salt spray introducing SO_2 gas for 1 hour four times a day (every 6 hours in accordance with A.4.4.4.1 of ASTM G85). Test duration (exposure period) shall be 336 hours. Introduce the SO_2 gas at a flow rate of 1 cubic centimeter per minute per cubic foot (cm^3/min-ft^3) (35 cubic centimeters per minute per cubic meter (cm^3/min-m^3)) of cabinet volume using a method to ensure uniform dispersion throughout the chamber interior (such as gas dispersion ring). Measure the salt spray (fog) fallout rate at intervals of every 24 hours and ensure fallout has specified pH (2.5 to 3.2) and a rate of 1 to 3 ml/80cm^2/hr. After the exposure period, remove the test samples from the chamber. Clean test samples by gently washing or dipping in running tap water (not warmer than 38° C (100° F)) for at least 5 minutes. Dry immediately with a stream of clean, dry compressed air or inert gas. Once cleaned and dried, the assemblies shall be examined under three-power magnification for modified SO_2/salt penetration into the connector junction area and damage to external parts. Adequate safety measures must be taken during this test. Fallout rate measurements and otherwise opening of the chamber shall not occur during an SO_2 cycle (dispersion period). Once the chamber is opened, sufficient time must be allotted for exhaust hood or other means of ventilation to remove the SO_2 atmosphere prior to exposure to the chamber interior. No visible evidence of modified SO_2/salt penetration into the mechanical splice sealed area shall be observed. No corrosive effects shall be seen on the external parts (including barrel and strain relief capture mechanism) which would be detrimental to the operation of the mechanical splice. Insertion loss verification requirement shall be met.

Fluid immersion. Applicable except that specimens (each mechanical splice (cable assembly) and each sample of polymeric material) shall be exposed to the all of the fluids at the temperatures specified in table 3409-AI, Measurement 3409 of MIL-STD-1678-3 for temperature range 2. Specimens shall be maintained at ambient conditions for a minimum of 4 hours prior to fluid testing. After immersion, all specimens shall be drained (for at least 10 minutes), blotted to

remove excess fluid (without scrubbing or mechanically interact), rinsed with moderate agitation (using only a back and forth or up and down type motion) for a maximum of 30 seconds in isopropyl alcohol (TT-I-735), blotted dry (without scrubbing or mechanically interact), and air dried for a minimum of one hour prior to inspection and transfer to subsequent fluid. Prior to and after testing, the mechanical splice shall be visually examined and the separate polymeric samples shall be visually and dimensionally examined.

Flammability. Test samples (mechanical splices on single fiber cable) shall be tested in accordance with EIA-364-81 and as specified herein. Test samples shall be exposed to a 19 mm (.75 inch) flame height applied for ten seconds to the region of the fiber-to-fiber interface. The change in optical transmittance shall be measured during the test and after the test once the test sample has returned to room temperature. The test samples shall then be exposed to a 38.1 mm (1.50 inch) flame height applied for 60 seconds to the mechanical splice-cable interface region.

Environmental performance. The environmental tests in table II shall be performed in the sequence listed. The environmental tests shall be performed per the applicable TIA-455 series or otherwise cited test standards with the exception of adhering strictly to any deviations, constraints or augmentations in the applicable 3300 series Measurements in MIL-STD-1678-3. Post exposure optical transmittance measurements may be taken up to 24 hours after completion of the environmental exposure.

Thermal shock. Test samples (mechanical splices in single fiber cable) shall be tested in accordance with TIA/EIA-455-71, schedule C-0 (5 cycles). The mechanical splices shall be visually examined after the test. Mechanical splices shall not be damaged, and there shall be no loosening of parts, leaking of index matching fluid, or other damage detrimental to the operation of the mechanical splice.

Types 1 and 2 cables. The temperatures of -55°C +0 -5°C and 165°C +5/-0°C shall be used for the low and high soak temperatures, respectively. The change in optical transmittance shall be measured during (towards the end of each soak temperature) and after the test. The requirement for the change in optical transmittance shall be met during and after the test.

Type 3 cable. The temperatures of -40°C +0/-5°C and 70°C +5/-0°C shall be used for the low and high soak temperatures, respectively. The change in optical transmittance shall be measured after the test.

Temperature/humidity cycling. Applicable with the following modification. During and after the temperature/humidity cycling test, the mechanical splice shall meet the requirements of the change in optical transmittance. A post test visual examination of the test specimens shall reveal no leakage of waterproofing compounds or other apparent loss of sealing capability, no surface or identification marking impairment, nor any damage detrimental to the operation of the test specimens.

Temperature cycling. Mechanical splices shall be tested in accordance with TIA-455-3 using the setup and procedure specified in measurement 3301 of MIL-STD-1678-3 with the temperature profile in table 3301-III for mechanical splices with types 1 and 2 cables and tested in accordance with TIA-455-3 using the setup and procedure specified in measurement 3301 of MIL-STD-1678-3 with the temperature profile in table 3301-I for mechanical splices with type 3 cable. The change in optical transmittance shall be measured during and after the test. At a minimum for the “during test” measurements, an optical transmittance measurement shall be performed towards the end of each soak period (maintain step) after every cycle. A post test visual examination of the test specimens shall reveal no leakage of waterproofing compounds or other apparent loss of sealing capability, no surface or identification marking impairment, nor any damage detrimental to

the operation of the mechanical splice. The operating temperature range shall be as specified in table 3301-III for the types 1 and 2 cables between the temperatures of -28 to +65 °C (-18 to +150 °F) for type 3 cable. Test fixtures, if used must be of minimum mass and approved by the qualifying activity. No other mass (item that causes significant thermal lag) shall be added inside the chamber.

Temperature life. Test samples (mechanical splices in single fiber cable) shall be tested in accordance with TIA-455-4. The change in optical transmittance shall be measured after the test. The mechanical splices shall be visually examined after the test to the extent feasible inside the cable harnesses. Mechanical splices shall not be damaged, and there shall be no loosening of parts, leaking of index matching fluid or other damage detrimental to the operation of the mechanical splice. The requirement for the change in optical transmittance shall be met after the test. Performance of a cable/fiber retention test is not required as part of the final inspection for this test.
Types 1 and 2 cable. The high exposure temperature shall be 165°C +5, -0°C for the duration of 1,000 hours.

Type 3 cable. The high exposure temperature shall be 110°C +5, -0°C for the duration of 240 hours.

Altitude immersion. Mechanical splices shall be tested in accordance with TIA-455-15. The complete sample shall be located within the chamber, with the mechanical splice submerged in a distilled water tank within the chamber. Instrument end connections shall not be submerged and shall be either routed outside the chamber or to an optical interface port. The change in optical transmittance shall be measured during and after the test (see MIL-PRF-24623 paragraph 4.6.3.4). During each test cycle, optical transmittance measurements shall be made at each ramp and during the plateau. The requirements for change in optical transmittance shall be met during and after the test.

TABLE III. Temperature cycling steps for types 1 and 2 cables.

Step	Cycle	Action	Temperature °C (°F)	Duration 1/
1	1	Maintain	25 +/-2 (77 +/-4)	4 hours (minimum)
2		Ramp to	-40 +0/-3 (-40+0/-5)	16.5 minutes (maximum)
3		Maintain	-40 +0/-3 (-40+0/-5)	15 minutes (minimum)
4		Ramp to	+85 +3/-0 (185 +5/0)	31.25 minutes (maximum)
5		Maintain	85 +3/-0 (85 +5/-0)	15 minutes (minimum)
6	2	Ramp to	-40 +0/-3 (-40+0/-5)	31.25 minutes (maximum)
7		Maintain	-40 +0/-3 (-40+0/-5)	15 minutes (minimum)
8		Ramp to	+85 +3/-0 (185 +5/0)	31.25 minutes (maximum)
9		Maintain	85 +3/-0 (185 +5/-0)	15 minutes (minimum)
10	3-500	Repeat steps 6 thru 9, 498 additional times, for a total of 500 cycles.		
11	Post 500	Ramp to	25 +/-2 (77 ±4)	35 minutes (maximum)
12		Maintain	25 +/-2 (77 ±4)	4 hours (minimum)

Water pressure. Not applicable.

Freezing water immersion. Not applicable.

Nuclear radiation resistance. Not applicable.

Inspections of mechanical splices in a cable harness.

Test sample configuration. Each mechanical splice is to be terminated onto the ends of single fiber cables (with other cable ends connectorized for attachment to optical test measurement instrumentation). These cable assemblies shall then be incorporated into a cable harness as specified in MIL-STD-1678-4 Requirement 4014. Cable used, test sample configurations, fabrication methods and the specific test methods and practices shall be as specified in MIL-STD-1678-4 Requirement 4014. Mechanical splices, selected from the group that underwent inspections for un-terminated termini, shall be used. A minimum sample size as specified in table II shall be used.

Optical performance. The optical tests in table II shall be performed in the sequence listed. Tests shall be performed with same constraints specified for mechanical splices as part of a single fiber cable.

Mechanical performance. The mechanical tests in table II shall be performed in the sequence listed. For a mechanical splice on single mode fiber, a discontinuity is considered to be a reduction of optical transmittance of 0.5 dB or more for a duration of 50 microseconds or more (during vibration) or 100 milliseconds or more (during shock). The mechanical tests cited shall be performed per the applicable TIA-455 series or otherwise cited test standards with the exception of adhering strictly to any deviations, constraints or augmentations in the applicable 3200 series Measurements in MIL-STD-1678-3.

Mechanical shock. Test samples (mechanical splices in cable harnesses) shall be tested in accordance with the applicable mechanical shock test listed below. Optical discontinuities shall be measured during the test. A minimum of four mechanical splices shall be monitored for discontinuity. The change in optical transmittance shall be monitored after the test. The mechanical splice shall be visually examined after the test to the extent feasible inside the cable harness. Mechanical splices shall not be damaged and there shall be no loosening of parts or leakage. The requirement for optical discontinuity shall be met during the test and the requirement for the change in optical transmittance shall be met after the test.

a. MIL-S-901. Test samples shall be tested in accordance with MIL-S-901, grade A, type B, class I. Standard shock fixture 4A for bulkhead mounting shall be used. Supplement test fixture with mounting shall be performed as specified in MIL-STD-1678-4 Requirement 4014.

b. Half-sine pulse. Test samples shall be tested in accordance with TIA-455-14, test condition D. Three shocks in each direction shall be applied along the three mutually perpendicular axes of the test sample (18 shocks).

Vibration. Test samples (mechanical splices in cable harnesses) shall be tested for sinusoidal and random vibration in accordance with the vibration tests listed below and shall be tested in accordance with TIA/EIA-455-11 using the setup and procedure specified in Measurement 3201 of MIL-STD-1678-3. Supplemental test fixture with mounting shall be performed as specified in MIL-STD-1678-4 Requirement 4014. Optical discontinuities shall be measured during the test. A minimum of four mechanical splices shall be monitored for optical discontinuity. The change in optical transmittance shall be monitored after the test. The mechanical splices shall be visually examined after the test to the extent feasible inside the cable harnesses. Mechanical splices shall not be damaged, and there shall be no loosening of parts, no leaking of the index matching

material, and no other damage which can produce physical distortion or wear and may result in fatigue of the mechanical parts. The requirement for optical discontinuity shall be met during the test and the requirement for the change in optical transmittance shall be met after the test.

a. Types 1 and 2 cable. Mechanical splices shall be tested for sinusoidal (swept sine) and random (both ambient and at a temperature of 125 °C) vibration in accordance with the vibration tests listed in 5.3 of MIL-STD-1678-3 Measurement 3201. The lower limit of the sinusoidal test shall be extended to 5 Hz.

b. Type 3 cable. Not applicable.

QUALIFICATION BY SIMILARITY.

a. Qualification of mechanical splice for different cable strain relief capture mechanisms.

(1) Manufacturers who qualify under this specification sheet for the mechanical splice with one style of cable strain relief capture mechanism and pass the insertion loss, twist, thermal shock, temperature life and insertion loss verification are qualified under this specification sheet for a different cable strain relief capture mechanism. Testing shall be performed, with the mechanical splice on the ends of the applicable single fiber cable types; to verify that strain relief is compatible with the different cable types (listed in MIL-STD-1678-4 Requirement 4014) as specified herein.

(2) Constraint for qualification by similarity case listed above. This qualification by similarity case is valid if the only difference between the qualified mechanical splice and the mechanical splice undergoing qualification is a different cable strain relief capture mechanism and SICC markings.

b. Qualification of mechanical splice for change in design or material.

Perform complete re-qualification.

CLEANING PRIOR TO PACKAGING.

Mechanical splices shall be cleaned prior to packaging/shipment internally (for ensuring proper index matching with no contamination) and externally (for minimizing contamination).

VERIFICATION PROGRAM

Verification program. A verification program must be established and maintained in accordance with MIL-STD-790 or comparable standard. Evidence of such compliance will be verified by the qualifying activity of this specification as a prerequisite for qualification and continued qualification. The verification system procedures, planning and all other documentation and data that comprise the verification system must be available to the Government for review. The Government may perform any necessary inspections, verifications and evaluations to ascertain conformance to the requirements and adequacy of the implementing procedures.

QUALIFIED PRODUCTS LIST

Qualification. With respect to products requiring qualification, awards will be made only for products which are, at the time of award of contract, qualified for inclusion in Qualified Products List QPL No. 24623 whether or not such products have actually been solicited by that date. The attention of the contractors is called to these requirements, and manufacturers are urged to arrange to have the

products that they propose to offer to the Federal Government tested for qualification in order that they may be eligible to be awarded contracts or purchase orders for the products covered by this specification. Information pertaining to qualification of products may be obtained from the DLA Land and Maritime, ATTN: VQ, 3990 East Broad Street, Columbus, OH 43216-5000.

Requalification period: As long as the material supplied is identical in every respect to the qualification sample tested and found satisfactory, then the period for re-qualification is to be every 10 years.

INTENDED USE

The mechanical splice is intended for use in aircraft applications to join cable segments inside cable harnesses and separate cable runs.

Maintainer environment. Maintainers in the field are expected to perform a repair or other maintenance action utilizing this fiber optic component (as part of a fabrication/installation) in an environment within the temperature range of -10°C to 55°C (14°F to 131°F). Maintenance functions or actions performed outside this environment would necessitate the fiber optic component be kept in a “maintainer environment” and exposed outside this environment only at the step in which the component is installed on the fiber optic cable.

REFERENCED DOCUMENTS

In addition to MIL-PRF-24623, this specification sheet references the following documents:

MIL-S-901	SAE AMS-DTL-23053/5	TIA-455-20
MIL-STD-790	TIA-455-3	TIA-455-189
MIL-STD-1678-2	TIA-455-4	EIA-364-81
MIL-STD-1678-4	TIA/EIA-455-11	
MIL-PRF-24792	TIA/EIA-455-71	
MIL-PRF-24793	TIA-455-14	
MIL-PRF-24794	TIA-455-15	
TT-I-735	TIA-455-16	
ASTM G85		
ASTM B117		
ASTM D1149		
SAE AIR 1351		

Changes from previous issue. The margins of this specification are marked with vertical lines to indicate where changes from the previous issue were made. This was done as a convenience only and the Government assumes no liability whatsoever for any inaccuracies in these notations. Bidders and contractors are cautioned to evaluate the requirements of this document based on the entire content irrespective of the marginal notations and relationship to the last previous issue.

CONCLUDING MATERIAL

Custodians:
Army – CR
Navy - AS
Air Force – 85
DLA - CC

Review activities:
Army – AR, MI
Navy – EC, CG, MC, SH
Air Force – 13, 19, 93, 99
NASA – NA

Preparing activity:
DLA - CC

Project 6060-2011-001

NOTE: The activities listed above were interested in this document as of the date of this document. Since organizations and responsibilities can change, you should verify the currency of the information above using the ASSIST Online database at https://assist.dla.mil/.