NOTE: The document identifier and heading have been changed on this page to reflect that this is a performance specification. There are no other changes to this document. The document identifier on subsequent pages has not been changed, but will be changed the next time this document is revised.

MIL-PRF-22885/84B(USAF)
2 JULY 1980
SUPERSEDING
MIL-S-22885/84A(USAF)
20 June 1974

PERFORMANCE SPECIFICATION SHEET

(B) SWITCH, PUSHBUTTON, ILLUMINATED, MOMENTARY AND ALTERNATE ACTION, 4 LAMP, 7 AMPERES (2.43 LONG X .875 SQUARE)

This specification sheet is approved for use by the Air Force Acquisition Logistics Division, Electronic Support Division (AFALD/PTES), Wright-Patterson AFB, Ohio 45433, Department of the Air Force, and is available for use by all Departments and Agencies of the Department of Defense.

The complete requirements for procuring the switches described herein shall consist of this document and the latest issue of Specification MIL-S-22885.

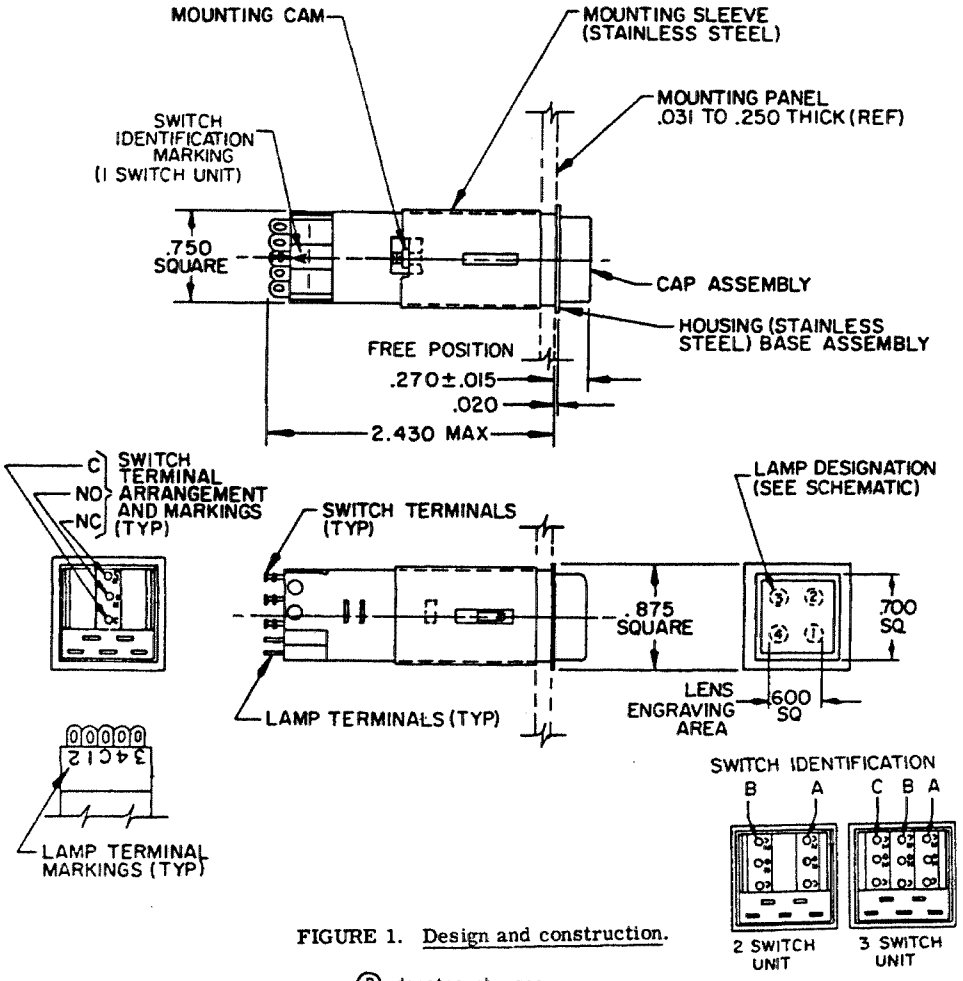

FIGURE 1. Design and construction.

(B) denotes changes

FSC 5930

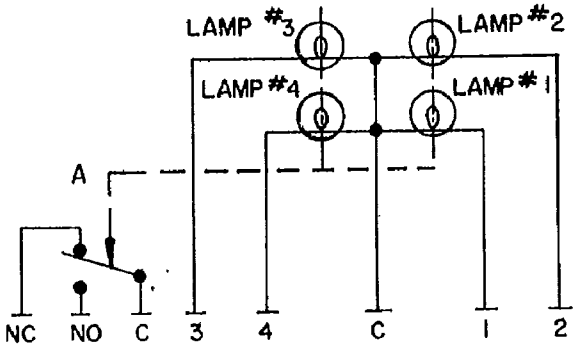

SCHEMATIC DIAGRAM IPDT SHOWN

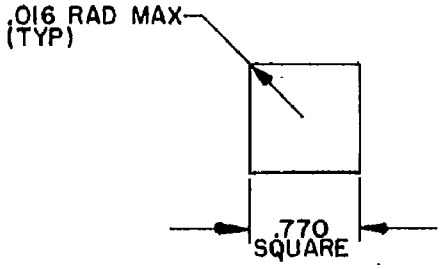

RECOMMENDED PANEL CUTOUT

INCHES	MM
.015	.38
.016	.41
.020	.51
.031	.79
.250	6.35
.270	6.86
.600	15.24
.700	17.78
.750	19.05
.770	19.56
.875	22.23
2.430	61.72

NOTES:
1. Dimensions are in inches.
2. Metric equivalents are given for general information only and are based upon 1.00 inch = 25.4 mm.
3. Unless otherwise specified, tolerance is ±.005 (.13 mm).
4. All terminals shall be insulated from the case.
5. All terminals and basic switches shall be permanently identified as shown on the diagram.
6. Lamps not furnished - accommodates four T-1-3/4 midget flange base incandescent lamps.
7. Basic switch shall be MS24547-4 (MIL-S-8805/4) switch listed on QPL-8805.
8. Exact shape of switch optional provided dimensions specified are not exceeded.

FIGURE 1. Design and construction - Continued.

REQUIREMENTS:

Design and construction: See figure 1.

Complete switch shall consist of:
(B) 1 - Base assembly - includes MS24547-4 basic switches and mounting sleeve.
1 - Cap assembly - includes necessary color filters and lenses.
4 - Lamps - T-1 3/4 midget flange base, incandescent not included; order separately.

Enclosure design: 1 (unsealed).

Temperature characteristic: 1 (-55° to +85°C).

Vibration grade: 2 (10-500 Hz).

(B) Color and luminance: See table II.
Display: Translucent white, which when illuminated shows the required color.

Weight: 0.11 ±.01 pound.

(B) Material:
Base assembly and mounting sleeve: Stainless steel.

Operating characteristics:
Actuating force: 2 to 5 pounds.
Pretravel: 0.165 inch maximum.

Cap assembly extraction force: 4.0 ±1.0 pounds.

Shock (specified pulse): MIL-STD-202, method 213, test condition H (75 G, 6 millisecond sawtooth pulse).

Electrical ratings: See table I.

TABLE I. Electrical ratings.

Load	Sea level		50,000 feet
	28 Vdc	115 Vac 60 Hz	28 Vdc
	amperes	amperes	amperes
Resistive - - - -	7.0	7.0	4.0
Inductive - - - - -	4.0	7.0	2.5
Lamp - - - - - - -	2.5	2.0	2.5

RFI: Cap-lampholder assembly to have screen and contact for RFI shielding. Switches shall be tested to determine shielding effectiveness in accordance with the general procedures specified in MIL-STD-285. The test shall consist of electric field and plane wave measurements performed at the following frequencies. Attenuation shall not be less than specified below.

Electric field	Minimum attenuation	Plane wave	Minimum attenuation
15 kHz	60 dB	100 MHz	47 dB
150 kHz	60 dB	400 MHz	39 dB
500 kHz	60 dB	1 GHz	33 dB
1 MHz	60 dB	2.5 GHz	28 dB
10 MHz	60 dB	10 GHz	20 dB

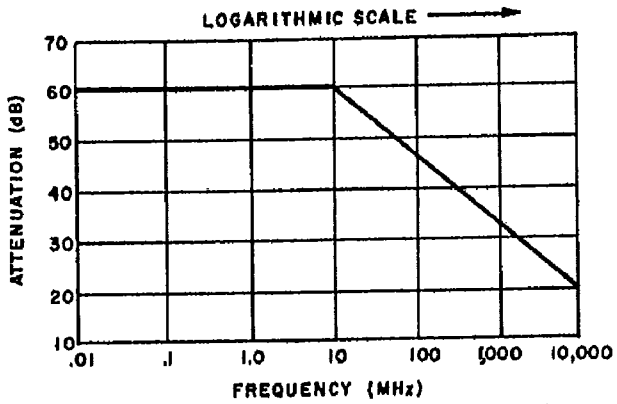

(B) TABLE II. Color and luminance.

Chromaticity coordinates 2360°K			Luminance-minimum average light output (foot-lamberts)
Color	X	Y	
Red(R)	.695 .703 .655 .660	.285 SL 1/ .325 SL 1/	60
Green(G)	.150 .150 .300 .300	.450 .580 .580 .450	50
Yellow(Y)	.530 .544 .584 .571	.442 SL 1/ SL 1/ .402	250
White(W)	.400 .460 .400 .460	.440 .440 .380 .380	150

1/ SL - Spectrum locus

Legends: See table III.

TABLE III. Legends.

GENERAL PURPOSE ALARM	COMMAND ALARM	WEAPONS ALARM	SURVEILLANCE ALARM	SIMULATION ALARM
001	002	003	004	005
SWITCH ACTION FEEDBACK ALARM	AUDIBLE ALARM RESET	ALARM	ENTER	AUDIBLE OFF
006	007	008	009	010
LAMP TEST	POWER ON	1	2	4
011	012	013	014	015
8	16	32	TAB CURSOR BLINK/STEADY	SID CURSOR BLINK/STEADY
016	017	018	019	020
CANCEL OFFSET	OFFSET	RETURN TO CENTER	SPARE	
021	022	023	024	

NOTE: Characters shall be 1/4 inch Gorton extra condensed Gothic for numerical legends; 3/32 inch Gorton condensed Gothic for legends 006, 019 and 020; 1/8 inch Gorton extra condensed Gothic for all other word legends. Unless otherwise specified in table VII, legends shall be opaque black letters visible at all times on white background which when illuminated shows color required.

(B) Part number: M22885/84-(dash number from table VII). Dash numbers for any switches without legends shall be assigned as follows:

M22885/84-	F	5YGR
Specification sheet number	Base assembly code (See table IV)	Cap assembly code (see table V)
Example-	3PDT alternate action	3-way split lens top illuminates yellow, bottom right illuminates green, bottom left illuminates red.

(B) TABLE IV. Base assembly code (circuit and operation).

Code	Circuit	Operation
A	1PDT	Momentary
B	1PDT	Alternate
C	2PDT	Momentary
D	2PDT	Alternate
E	3PDT	Momentary
F	3PDT	Alternate
G	Indicator	---
H 1/	None	---

1/ Use code H to specify cap assembly portion of switch only.

(B) TABLE V. Cap assembly code (lens style and color).

Code 1/	Lens style 2/
1X	1
2XX	1 2
3XXX	1 2 3
4XXXX	1 2 4 3
5XXX	1 3 2
6 3/	None

1/ Substitute appropriate color symbol for each "X" in proper sequence.
2/ Numbers indicate color symbol sequence for Part number.
3/ Use code 6 to specify base assembly portion of switch only.

QUALIFICATION:

(B) QUALIFICATION INSPECTION: All applicants for qualification approval shall demonstrate that each of their items conforms to all the requirements specified in the applicable documents singularly and in combination with all other previously qualified items, regardless of manufacturer.

GROUP SUBMISSION:

a. When the basic sensitive switches are qualified to MIL-S-8805, switches shall be tested in accordance with table VI.
b. When the basic sensitive switches are not qualified to MIL-S-8805, the switch type for which qualification is sought, shall be submitted to the complete tests in accordance with table X of MIL-S-22885.
c. The following applies when the momentary and the alternate action switches are submitted for qualification at the same time.

TABLE VI. Extent of qualification.

Switch	Tests of MIL-S-22885	Extent of approval
M22885/84-F1W	All tests of table X 1/ 2/	All part numbers
M22885/84-E1W (2 sample units)	Group I, and vibration and shock	

1/ Cap assemblies of each color for which qualification is sought shall be utilized with M22885/84-F6 switch housing for group VIII tests.
2/ Electrical endurance, dc resistive load only. Short circuit and explosion tests not required.

TABLE VII. Dash number and characteristics.

Dash number 1/	Legend (see table III code)	Circuit characteristics	Operation	Illuminated color
07	001	1PDT	Momentary	Red
08		1PDT	Alternate	
09		2PDT	Momentary	
10		2PDT	Alternate	
11		3PDT	Momentary	
12		3PDT	Alternate	
13	002	1PDT	Momentary	
14		1PDT	Alternate	
15		2PDT	Momentary	
16		2PDT	Alternate	
17		3PDT	Momentary	
18		3PDT	Alternate	
19	003	1PDT	Momentary	
20		1PDT	Alternate	
21		2PDT	Momentary	
22		2PDT	Alternate	
23		3PDT	Momentary	
24		3PDT	Alternate	
25	004	1PDT	Momentary	
26		1PDT	Alternate	
27		2PDT	Momentary	
28		2PDT	Alternate	
29		3PDT	Momentary	
30		3PDT	Alternate	
31	005	1PDT	Momentary	
32		1PDT	Alternate	
33		2PDT	Momentary	
34		2PDT	Alternate	
35		3PDT	Momentary	
36		3PDT	Alternate	
37	006	1PDT	Momentary	
38		1PDT	Alternate	
39		2PDT	Momentary	
40		2PDT	Alternate	
41		3PDT	Momentary	
42		3PDT	Alternate	
43	007	1PDT	Momentary	
44		1PDT	Alternate	
45		2PDT	Momentary	
46		2PDT	Alternate	
47		3PDT	Momentary	
48		3PDT	Alternate	
49	008	1PDT	Momentary	
50		1PDT	Alternate	
51		2PDT	Momentary	
52		2PDT	Alternate	
53		3PDT	Momentary	
54		3PDT	Alternate	

1/ Dash numbers 01 thru 06 (switches without legends) from MIL-S-22885/84A have been replaced by and are interchangeable with A1W thru F1W, respectively (see tables IV and V).

TABLE VII. Dash number and characteristics - Continued.

Dash number	Legend (see table III code)	Circuit characteristics	Operation	Illuminated color
55	009	1PDT	Momentary	White
56		1PDT	Alternate	
57		2PDT	Momentary	
58		2PDT	Alternate	
59		3PDT	Momentary	
60		3PDT	Alternate	
61	010	1PDT	Momentary	
62		1PDT	Alternate	
63		2PDT	Momentary	
64		2PDT	Alternate	
65		3PDT	Momentary	
66		3PDT	Alternate	
67	011	1PDT	Momentary	
68		1PDT	Alternate	
69		2PDT	Momentary	
70		2PDT	Alternate	
71		3PDT	Momentary	
72		3PDT	Alternate	
73	012	1PDT	Momentary	Green
74		1PDT	Alternate	
75		2PDT	Momentary	
76		2PDT	Alternate	
77		3PDT	Momentary	
78		3PDT	Alternate	
79	013	1PDT	Momentary	White
80		1PDT	Alternate	
81		2PDT	Momentary	
82		2PDT	Alternate	
83		3PDT	Momentary	
84		3PDT	Alternate	
85	014	1PDT	Momentary	
86		1PDT	Alternate	
87		2PDT	Momentary	
88		2PDT	Alternate	
89		3PDT	Momentary	
90		3PDT	Alternate	
91	015	1PDT	Momentary	
92		1PDT	Alternate	
93		2PDT	Momentary	
94		2PDT	Alternate	
95		3PDT	Momentary	
96		3PDT	Alternate	
97	016	1PDT	Momentary	
98		1PDT	Alternate	
99		2PDT	Momentary	
100		2PDT	Alternate	
101		3PDT	Momentary	
102		3PDT	Alternate	
103	017	1PDT	Momentary	
104		1PDT	Alternate	
105		2PDT	Momentary	
106		2PDT	Alternate	
107		3PDT	Momentary	
108		3PDT	Alternate	

TABLE VII. Dash number and characteristics - Continued.

Dash number	Legend (see table III code)	Circuit characteristics	Operation	Illuminated color
109	018	1PDT	Momentary	White
110		1PDT	Alternate	
111		2PDT	Momentary	
112		2PDT	Alternate	
113		3PDT	Momentary	
114		3PDT	Alternate	
115	019	1PDT	Momentary	
116		1PDT	Alternate	
117		2PDT	Momentary	
118		2PDT	Alternate	
119		3PDT	Momentary	
120		3PDT	Alternate	
121	020	1PDT	Momentary	
122		1PDT	Alternate	
123		2PDT	Momentary	
124		2PDT	Alternate	
125		3PDT	Momentary	
126		3PDT	Alternate	
127	021	1PDT	Momentary	
128		1PDT	Alternate	
129		2PDT	Momentary	
130		2PDT	Alternate	
131		3PDT	Momentary	
132		3PDT	Alternate	
133	022	1PDT	Momentary	
134		1PDT	Alternate	
135		2PDT	Momentary	
136		2PDT	Alternate	
137		3PDT	Momentary	
138		3PDT	Alternate	
139	023	1PDT	Momentary	
140		1PDT	Alternate	
141		2PDT	Momentary	
142		2PDT	Alternate	
143		3PDT	Momentary	
144		3PDT	Alternate	
145	024	1PDT	Momentary	
146		1PDT	Alternate	
147		2PDT	Momentary	
148		2PDT	Alternate	
149		3PDT	Momentary	
150		3PDT	Alternate	

Custodian:
Air Force - 85

Review activities:
Air Force - 99
DLA - ES

Preparing activity:
Air Force - 85

(Project 5930-F517)