INCH-POUND

MIL-PRF-22710/20D
20 April 2001

SUPERSEDING
MIL-S-22710/20C
4 October 1982

PERFORMANCE SPECIFICATION SHEET

SWITCHES, CODE INDICATING WHEEL (PRINTED CIRCUIT), (THUMBWHEEL SWITCH ASSEMBLY, SEALED MODULES, DUAL-ILLUMINATED) (RFI SHIELDED) (TOP AND BOTTOM RELAMPABLE), STYLE SRPC20

This specification is approved for use by all Departments and Agencies of the Department of Defense.

The requirements for acquiring the product described herein shall consist of this specification sheet and the issue of MIL-PRF-22710 listed in that issue of the Department of Defense Index of Specifications and Standards (DODISS) specified in the solicitation.

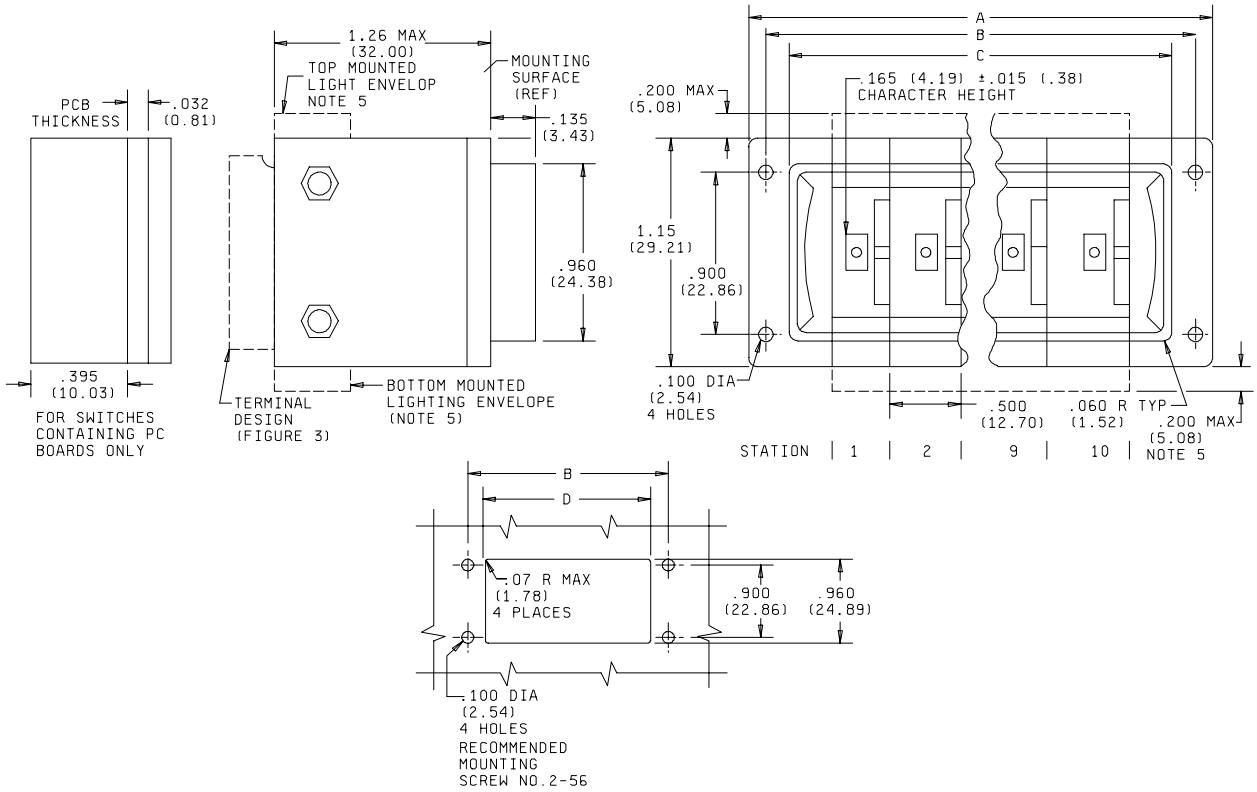

RECOMMENDED PANEL CUTOUT

FIGURE 1. Style SRPC20 switch andpanel cutout (unshielded switch).

DISTRIBUTION STATEMENT A. Approved for public release; distribution is unlimited.

Dimensions								
No. of stations	A ±0.03 (0.76)		B		C		D	
	inches	mm	inches	mm	inches	mm	inches	mm
1	1.26	32.00	1.09	27.69	0.9	22.86	0.92	23.37
2	1.76	44.70	1.59	40.39	1.4	35.56	1.42	36.07
3	2.26	57.40	2.09	53.09	1.9	48.26	1.92	48.77
4	2.76	70.10	2.59	65.79	2.4	60.96	2.42	61.47
5	3.26	82.80	3.09	78.49	2.9	73.66	2.92	74.17
6	3.76	95.50	3.59	91.19	3.4	86.36	3.42	86.87
7	4.26	108.20	4.09	103.89	3.9	99.06	3.92	99.57
8	4.76	120.90	4.59	116.59	4.4	111.76	4.42	112.27
9	5.26	133.60	5.09	129.29	4.9	124.46	4.92	124.97
10	5.76	146.30	5.59	141.99	5.4	137.16	5.42	137.67

NOTES:
1. Dimensions are in inches.
2. Metric equivalents are given for general information only and are based upon 1 inch = 25.4 mm.
3. Unless otherwise specified, tolerance is ±.010 (.25 mm).
4. Allowance for lighting terminals for externally replaceable lamps.

FIGURE 1. Style SRPC20 switch and panel cutout (unshielded switch) - Continued.

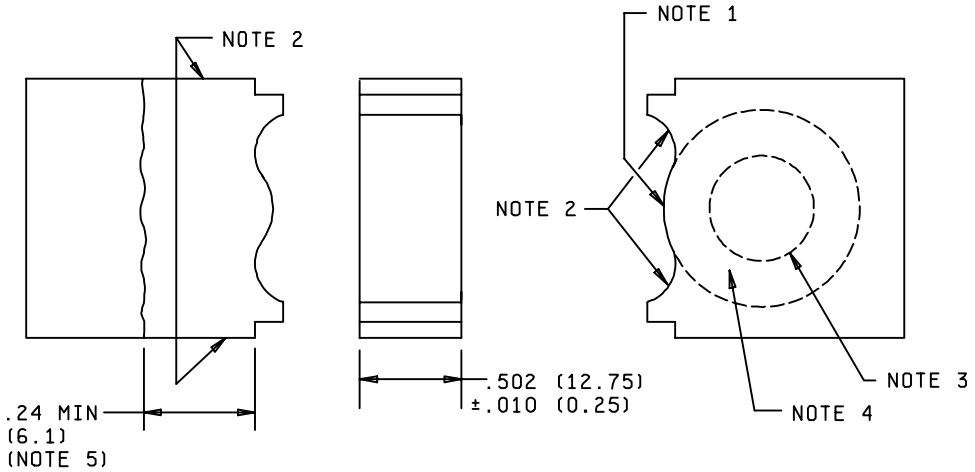

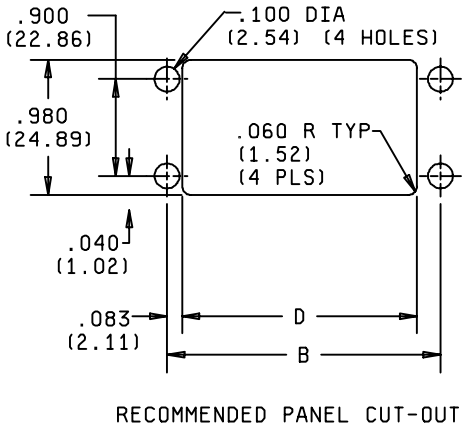

No. of Modules	Dimensions			
	D		B	
1	0.926	23.52	1.094	27.79
2	1.428	36.27	1.596	40.54
3	1.930	49.02	2.098	53.29
4	2.432	61.77	2.600	66.04
5	2.934	74.52	3.102	78.79
6	3.436	87.27	3.604	91.54
7	3.938	100.03	4.106	104.29
8	4.440	112.78	4.608	117.04
9	4.942	125.53	5.110	129.79
10	5.444	138.28	5.612	142.54

NOTES:
1. Black matte finish over silver - for all surfaces exposed from front of panel
2. No color coating to be applied over silver in these areas (4 places).
3. No paint applied to this surface.
4. Overspray permitted in this area.
5. Minimum silvered surface, measured from mounting surface.

FIGURE 2. RFI shielded switch and panel cutout.

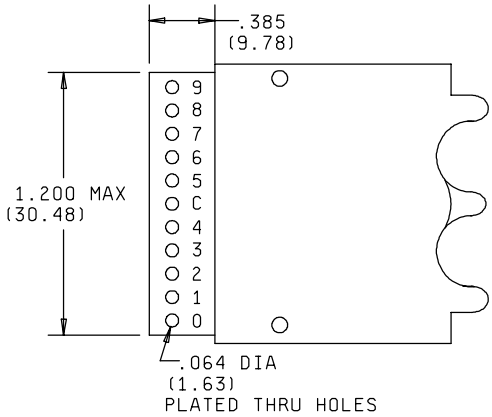

MODULE A, A1, A2 or A3

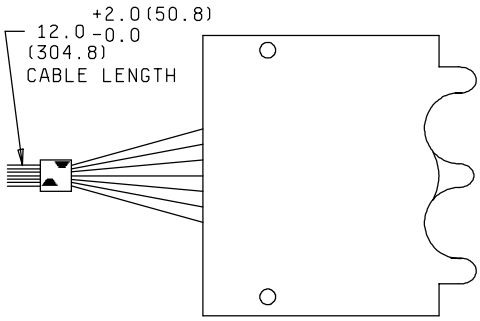

MODULE B, B1, B2 or B3

LEAD	COLOR
C	WHT.BRN
O	BLACK
1	BROWN
2	RED
3	ORANGE
4	YELLOW
5	GREEN
6	BLUE
7	VIOLET
8	GREY
9	WHITE

TRUTH TABLE (Circuit configuration 1) 36° INDEXING	
DIAL MARKING	COMMON C CONN. TO::
0	0
1	1
2	2
3	3
4	4
5	5
6	6
7	7
8	8
9	9

Figure 3. Module and circuit configuration.

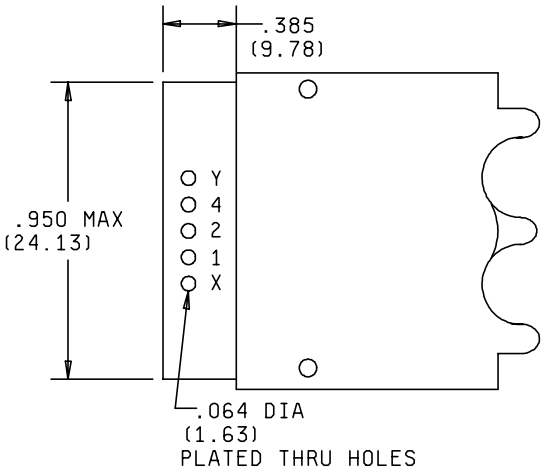

MODULE C, C1, C2 or C3

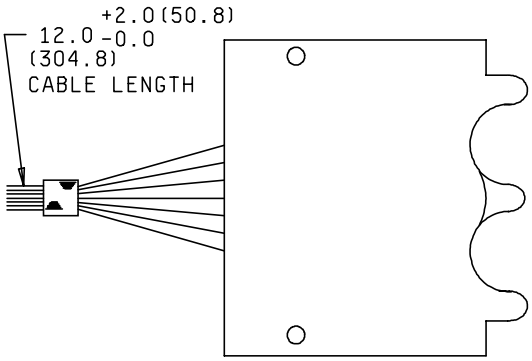

MODULE D, D1, D2 or D3

LEAD	COLOR
X	WHITE
Y	BLACK
1	BROWN
2	RED
4	YELLOS

TRUTH TABLE (Circuit configuration 2) 45° INDEXING			
DIAL MARKING	COMMON X(•) & Y(o) CONN. TO:		
	1	2	3
0	o	o	o
1	•	o	o
2	o	•	o
3	•	•	o
4	o	o	•
5	•	o	•

Figure 3. Module and circuit configuration. - Continued.

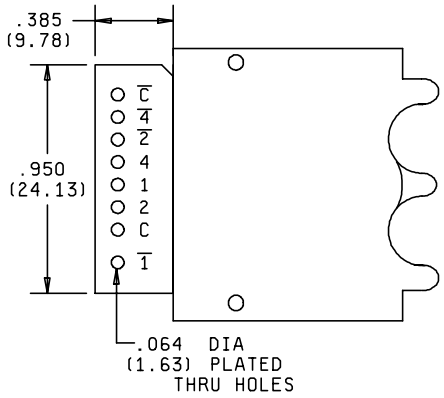

MODULE E, E1, E2 or E3

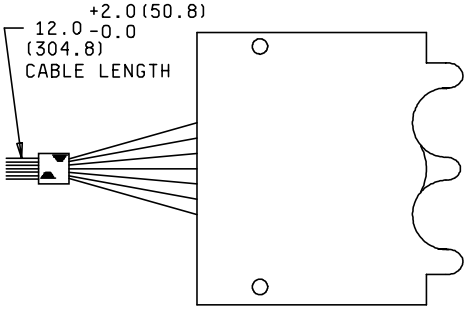

MODULE F, F1, F2 or F3

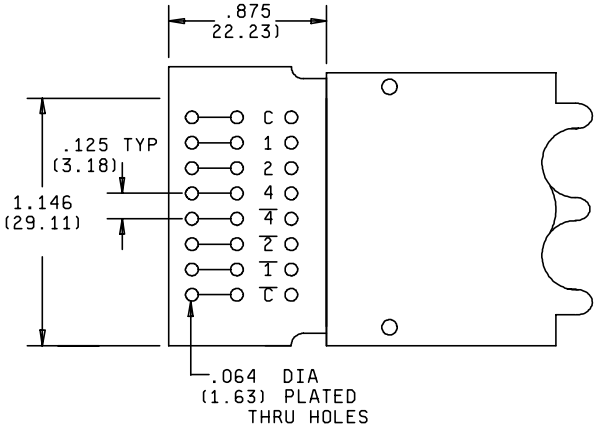

MODULE G, G1, G2 or G3

LEAD	COLOR
$\overline{C}$	WHT/BRN
C	WHT/ORG
1	BROWN
2	RED
4	YELLOW
$\overline{1}$	BLUE
$\overline{2}$	VIOLET
$\overline{4}$	ORANGE

TRUTH TABLE (Circuit configuration 3) 45° INDEXING						
DIAL MARKING	COMM C CONN TO:			COMM $\overline{C}$ CONN TO:		
	1	2	4	$\overline{1}$	$\overline{2}$	$\overline{4}$
0				•	•	•
1	•				•	•
2		•		•		•
3	•	•				•
4			•	•	•	
5	•		•		•	
6		•	•	•		
7	•	•	•			

Figure 3. Module and circuit configuration. - Continued.

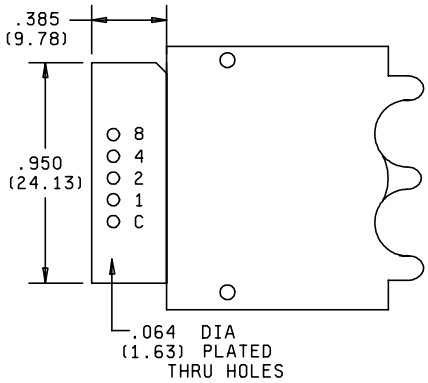

MODULE H, H1, H2 or H3

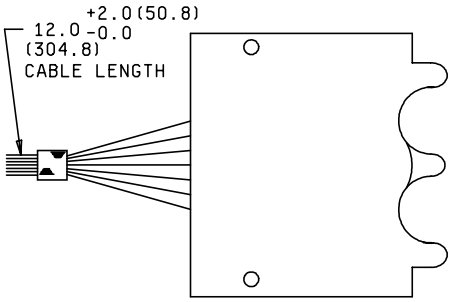

MODULE J, J1, J2 or J3

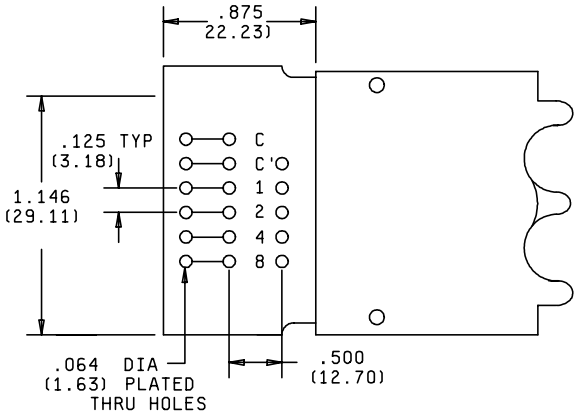

MODULE K, K1, K2 or K3

LEAD	COLOR
C	WHT/BRN
1	BROWN
2	RED
4	YELLOW
8	GREY

TRUTH TABLE (CircuirT configuration 4) 36° INDEXING				
DIAL MARKING	COMMON C CONN. TO:			
	1	2	4	8
0				
1	•			
2		•		
3	•	•		
4			•	
5	•		•	
6		•	•	
7	•	•	•	
8				•
9	•			•

Figure 3. Module and circuit configuration. - Continued.

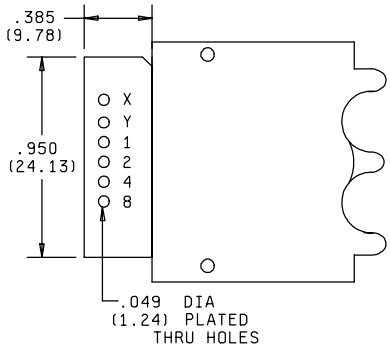

MODULE L, L1, L2 or L3

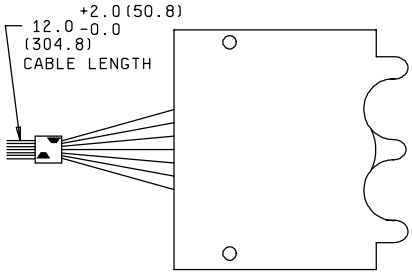

MODULE M, M1, M2 or M3

LEAD	COLOR
C	WHT/BRN
1	BROWN
2	RED
4	YELLOW
8	GREY

TRUTH TABLE (CircuirT configuration 4) 36° INDEXING				
DIAL MARKING	COMMON C CONN. TO:			
	1	2	4	8
0	o	o	o	o
1	•	o	o	o
2	o	•	o	o
3	•	•	o	o
4	o	o	•	o
5	•	o	•	o
6	o	•	•	o
7	•	•	•	o
8	o	o	o	•
9	•	o	o	•

Figure 3. Module and circuit configuration. - Continued.

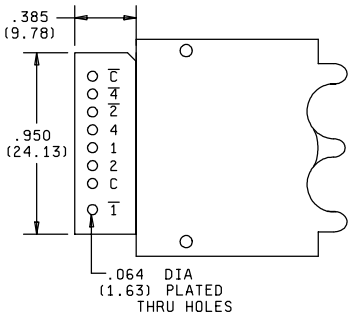

MODULE N, N1, N2 or N3

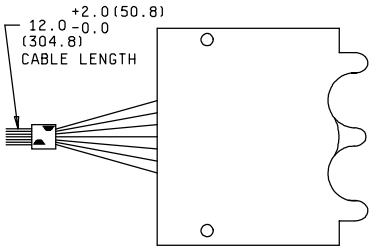

MODULE P, P1, P2 or P3

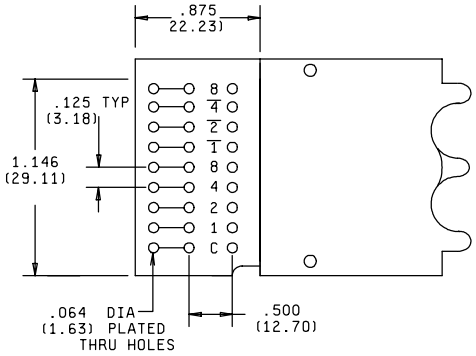

MODULE R, R1, R2 or R3

LEAD	COLOR
C	WHT/BRN
1	BROWN
2	RED
4	YELLOW
8	GREY
$\overline{1}$	BLUE
$\overline{2}$	VIOLET
$\overline{4}$	ORANGE
$\overline{8}$	BLACK

TRUTH TABLE (Circuit configuration 6) 36° INDEXING								
DIAL MARKING	COMMON C CONN. TO:							
	1	2	4	8	$\overline{1}$	$\overline{2}$	$\overline{4}$	$\overline{8}$
0					•	•	•	•
1	•					•	•	•
2		•			•		•	•
3	•	•					•	•
4			•		•	•		•
5	•		•			•		•
6		•	•		•			•
7	•	•	•					•
8				•	•	•	•	
9	•			•		•	•	

Figure 3. Module and circuit configuration. - Continued.

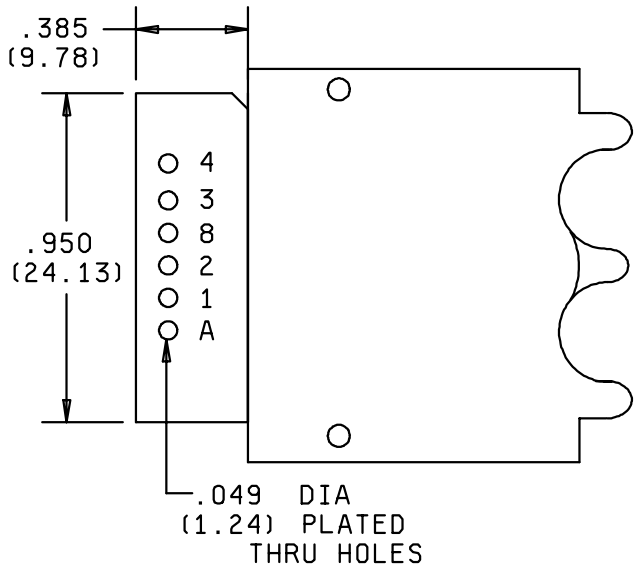

MODULE S or S1

TRUTH TABLE (Circuit configuration 7) 45° INDEXING				
DIAL MARKING	COMMON A CONN. TO:		COMMON B CONN. TO:	
	1	2	3	4
0	•		•	
5		•		•
0	•		•	
5		•		•
0	•		•	
5		•		•
0	•		•	
5		•		•

NOTES:
1. Dimensions are in inches.
2. Metric equivalents are given for general information only and are based upon 1 inch - 25.4 mm.
3. Where specified C' is common to C and is used for component mounting.

Figure 3. Module and circuit configuration. - Continued.

TABLE I. Module description. 1/

Module Number	Circuit Configuration	Dial		illumination Color	EMI/RFI Shielded
		Background	Marking		
A	1	Black Opaque	White transluscent	Red	No
A1	1	"	"	Clear	No
A2	1	"	"	Red	Yes
A3	1	"	"	Clear	Yes
B	1	"	"	Red	No
B1	1	"	"	Clear	No
B2	1	"	"	Red	Yes
B3	1	"	"	Clear	Yes
C	2	"	"	Red	No
C1	2	"	"	Clear	No
C2	2	"	"	Red	Yes
C3	2	"	"	Clear	Yes
D	2	"	"	Red	No
D1	2	"	"	Clear	No
D2	2	"	"	Red	Yes
D3	2	"	"	Clear	Yes
E	3	"	"	Red	No
E1	3	"	"	Clear	No
E2	3	"	"	Red	Yes
E3	3	"	"	Clear	Yes
F	3	"	"	Red	No
F1	3	"	"	Clear	No
F2	3	"	"	Red	Yes
F3	3	"	"	Clear	Yes
G	3	"	"	Red	No
G1	3	"	"	Clear	No
G2	3	"	"	Red	Yes
G3	3	"	"	Clear	Yes
H	4	"	"	Red	No
H1	4	"	"	Clear	No
H2	4	"	"	Red	Yes
H3	4	"	"	Clear	Yes
J	4	"	"	Red	No
J1	4	"	"	Clear	No
J2	4	"	"	Red	Yes
J3	4	"	"	Clear	Yes
K	4	"	"	Red	No
K1	4	"	"	Clear	No
K2	4	"	"	Red	Yes
K3	4	"	"	Clear	Yes
L	5	"	"	Red	No
L1	5	"	"	Clear	No
L2	5	"	"	Red	Yes
L3	5	"	"	Clear	Yes
M	5	"	"	Red	No
M1	5	"	"	Clear	No
M2	5	"	"	Red	Yes
M3	5	"	"	Clear	Yes

See footnote at end of table.

TABLE I. Module description 1/ - Continued.

Module Number	Circuit Configuration	Dial		illumination Color	EMI/RFI Shielded
		Background	Marking		
N	6	Black Opaque	White translucent	Red	No
N1	6	"	"	Clear	No
N2	6	"	"	Red	Yes
N3	6	"	"	Clear	Yes
P	6	"	"	Red	No
P1	6	"	"	Clear	No
P2	6	"	"	Red	Yes
P3	6	"	"	Clear	Yes
R	6	"	"	Red	No
R1	6	"	"	Clear	No
R2	6	"	"	Red	Yes
R3	6	"	"	Clear	Yes
S	7	"	"	Red	Yes
S1	7	"	"	Clear	Yes

1/ Switch modules are not procurable by themselves, but are part of the switch assembly. See table II.

TABLE II. Switch Assembly.

Part Number M22710/20	Switch station module number									
	1	2	3	4	5	6	7	8	9	10
001	A									
002	A	A								
003	A	A	A							
004	A	A	A	A						
005	A	A	A	A	A					
006	A	A	A	A	A	A				
007	A	A	A	A	A	A	A			
008	A	A	A	A	A	A	A	A		
009	A	A	A	A	A	A	A	A	A	
010	A	A	A	A	A	A	A	A	A	A
011	A1									
012	A1	A1								
013	A1	A1	A1							
014	A1	A1	A1	A1						
015	A1	A1	A1	A1	A1					
016	A1	A1	A1	A1	A1	A1				
017	A1	A1	A1	A1	A1	A1	A1			
018	A1	A1	A1	A1	A1	A1	A1	A1		
019	A1	A1	A1	A1	A1	A1	A1	A1	A1	
020	A1	A1	A1	A1	A1	A1	A1	A1	A1	A1

TABLE II. Switch Assembly - Continued.

Part Number M22710/20	Switch station module number									
	1	2	3	4	5	6	7	8	9	10
021	B									
022	B	B								
023	B	B	B							
024	B	B	B	B						
025	B	B	B	B	B					
026	B	B	B	B	B	B				
027	B	B	B	B	B	B	B			
028	B	B	B	B	B	B	B	B		
029	B	B	B	B	B	B	B	B	B	
030	B	B	B	B	B	B	B	B	B	B
031	B1									
032	B1	B1								
033	B1	B1	B1							
034	B1	B1	B1	B1						
035	B1	B1	B1	B1	B1					
036	B1	B1	B1	B1	B1	B1				
037	B1	B1	B1	B1	B1	B1	B1			
038	B1	B1	B1	B1	B1	B1	B1	B1		
039	B1	B1	B1	B1	B1	B1	B1	B1	B1	
040	B1	B1	B1	B1	B1	B1	B1	B1	B1	B1
041	C									
042	C	C								
043	C	C	C							
044	C	C	C	C						
045	C	C	C	C	C					
046	C	C	C	C	C	C				
047	C	C	C	C	C	C	C			
048	C	C	C	C	C	C	C	C		
049	C	C	C	C	C	C	C	C	C	
050	C	C	C	C	C	C	C	C	C	C
051	C1									
052	C1	C1								
053	C1	C1	C1							
054	C1	C1	C1	C1						
055	C1	C1	C1	C1	C1					
056	C1	C1	C1	C1	C1	C1				
057	C1	C1	C1	C1	C1	C1	C1			
058	C1	C1	C1	C1	C1	C1	C1	C1		
059	C1	C1	C1	C1	C1	C1	C1	C1	C1	
060	C1	C1	C1	C1	C1	C1	C1	C1	C1	C1
061	D									
062	D	D								
063	D	D	D							
064	D	D	D	D						
065	D	D	D	D	D					
066	D	D	D	D	D	D				
067	D	D	D	D	D	D	D			
068	D	D	D	D	D	D	D	D		
069	D	D	D	D	D	D	D	D	D	
070	D	D	D	D	D	D	D	D	D	D

TABLE II. Switch Assembly - Continued.

Part Number M22710/20	Switch station module number									
	1	2	3	4	5	6	7	8	9	10
071	D1									
072	D1	D1								
073	D1	D1	D1							
074	D1	D1	D1	D1						
075	D1	D1	D1	D1	D1					
076	D1	D1	D1	D1	D1	D1				
077	D1	D1	D1	D1	D1	D1	D1			
078	D1	D1	D1	D1	D1	D1	D1	D1		
079	D1	D1	D1	D1	D1	D1	D1	D1	D1	
080	D1	D1	D1	D1	D1	D1	D1	D1	D1	D1
081	E									
082	E	E								
083	E	E	E							
084	E	E	E	E						
085	E	E	E	E	E					
086	E	E	E	E	E	E				
087	E	E	E	E	E	E	E			
088	E	E	E	E	E	E	E	E		
089	E	E	E	E	E	E	E	E	E	
090	E	E	E	E	E	E	E	E	E	E
091	C1									
092	E1	E1								
093	E1	E1	E1							
094	E1	E1	E1	E1						
095	E1	E1	E1	E1	E1					
096	E1	E1	E1	E1	E1	E1				
097	E1	E1	E1	E1	E1	E1	E1			
098	E1	E1	E1	E1	E1	E1	E1	E1		
099	E1	E1	E1	E1	E1	E1	E1	E1	E1	
100	E1	E1	E1	E1	E1	E1	E1	E1	E1	E1
101	F									
102	F	F								
103	F	F	F							
104	F	F	F	F						
105	F	F	F	F	F					
106	F	F	F	F	F	F				
107	F	F	F	F	F	F	F			
108	F	F	F	F	F	F	F	F		
109	F	F	F	F	F	F	F	F	F	
110	F	F	F	F	F	F	F	F	F	F
111	F1									
112	F1	F1								
113	F1	F1	F1							
114	F1	F1	F1	F1						
115	F1	F1	F1	F1	F1					
116	F1	F1	F1	F1	F1	F1				
117	F1	F1	F1	F1	F1	F1	F1			
118	F1	F1	F1	F1	F1	F1	F1	F1		
119	F1	F1	F1	F1	F1	F1	F1	F1	F1	
120	F1	F1	F1	F1	F1	F1	F1	F1	F1	F1

TABLE II. Switch Assembly - Continued.

Part Number M22710/20	Switch station module number									
	1	2	3	4	5	6	7	8	9	10
121	G									
122	G	G								
123	G	G	G							
124	G	G	G	G						
125	G	G	G	G	G					
126	G	G	G	G	G	G				
127	G	G	G	G	G	G	G			
128	G	G	G	G	G	G	G	G		
129	G	G	G	G	G	G	G	G	G	
130	G	G	G	G	G	G	G	G	G	G
131	G1									
132	G1	G1								
133	G1	G1	G1							
134	G1	G1	G1	G1						
135	G1	G1	G1	G1	G1					
136	G1	G1	G1	G1	G1	G1				
137	G1	G1	G1	G1	G1	G1	G1			
138	G1	G1	G1	G1	G1	G1	G1	G1		
139	G1	G1	G1	G1	G1	G1	G1	G1	G1	
140	G1	G1	G1	G1	G1	G1	G1	G1	G1	G1
141	H									
142	H	H								
143	H	H	H							
144	H	H	H	H						
145	H	H	H	H	H					
146	H	H	H	H	H	H				
147	H	H	H	H	H	H	H			
148	H	H	H	H	H	H	H	H		
149	H	H	H	H	H	H	H	H	H	
150	H	H	H	H	H	H	H	H	H	H
151	H1									
152	H1	H1								
153	H1	H1	H1							
154	H1	H1	H1	H1						
155	H1	H1	H1	H1	H1					
156	H1	H1	H1	H1	H1	H1				
157	H1	H1	H1	H1	H1	H1	H1			
158	H1	H1	H1	H1	H1	H1	H1	H1		
159	H1	H1	H1	H1	H1	H1	H1	H1	H1	
160	H1	H1	H1	H1	H1	H1	H1	H1	H1	H1
161	J									
162	J	J								
163	J	J	J							
164	J	J	J	J						
165	J	J	J	J	J					
166	J	J	J	J	J	J				
167	J	J	J	J	J	J	J			
168	J	J	J	J	J	J	J	J		
169	J	J	J	J	J	J	J	J	J	
170	J	J	J	J	J	J	J	J	J	J

TABLE II. Switch Assembly - Continued.

Part Number M22710/20	Switch station module number									
	1	2	3	4	5	6	7	8	9	10
171	J1									
172	J1	J1								
173	J1	J1	J1							
174	J1	J1	J1	J1						
175	J1	J1	J1	J1	J1					
176	J1	J1	J1	J1	J1	J1				
177	J1	J1	J1	J1	J1	J1	J1			
178	J1	J1	J1	J1	J1	J1	J1	J1		
179	J1	J1	J1	J1	J1	J1	J1	J1	J1	
180	J1	J1	J1	J1	J1	J1	J1	J1	J1	J1
181	K									
182	K	K								
183	K	K	K							
184	K	K	K	K						
185	K	K	K	K	K					
186	K	K	K	K	K	K				
187	K	K	K	K	K	K	K			
188	K	K	K	K	K	K	K	K		
189	K	K	K	K	K	K	K	K	K	
190	K	K	K	K	K	K	K	K	K	K
191	K1									
192	K1	K1								
193	K1	K1	K1							
194	K1	K1	K1	K1						
195	K1	K1	K1	K1	K1					
196	K1	K1	K1	K1	K1	K1				
197	K1	K1	K1	K1	K1	K1	K1			
198	K1	K1	K1	K1	K1	K1	K1	K1		
199	K1	K1	K1	K1	K1	K1	K1	K1	K1	
200	K1	K1	K1	K1	K1	K1	K1	K1	K1	K1
201	L									
202	L	L								
203	L	L	L							
204	L	L	L	L						
205	L	L	L	L	L					
206	L	L	L	L	L	L				
207	L	L	L	L	L	L	L			
208	L	L	L	L	L	L	L	L		
209	L	L	L	L	L	L	L	L	L	
210	L	L	L	L	L	L	L	L	L	L
211	L1									
212	L1	L1								
213	L1	L1	L1							
214	L1	L1	L1	L1						
215	L1	L1	L1	L1	L1					
216	L1	L1	L1	L1	L1	L1				
217	L1	L1	L1	L1	L1	L1	L1			
218	L1	L1	L1	L1	L1	L1	L1	L1		
219	L1	L1	L1	L1	L1	L1	L1	L1	L1	
220	L1	L1	L1	L1	L1	L1	L1	L1	L1	L1

TABLE II. Switch Assembly - Continued.

Part Number M22710/20	Switch station module number									
	1	2	3	4	5	6	7	8	9	10
221	M									
222	M	M								
223	M	M	M							
224	M	M	M	M						
225	M	M	M	M	M					
226	M	M	M	M	M	M				
227	M	M	M	M	M	M	M			
228	M	M	M	M	M	M	M	M		
229	M	M	M	M	M	M	M	M	M	
230	M	M	M	M	M	M	M	M	M	M
231	M1									
232	M1	M1								
233	M1	M1	M1							
234	M1	M1	M1	M1						
235	M1	M1	M1	M1	M1					
236	M1	M1	M1	M1	M1	M1				
237	M1	M1	M1	M1	M1	M1	M1			
238	M1	M1	M1	M1	M1	M1	M1	M1		
239	M1	M1	M1	M1	M1	M1	M1	M1	M1	
240	M1	M1	M1	M1	M1	M1	M1	M1	M1	M1
241	N									
242	N	N								
243	N	N	N							
244	N	N	N	N						
245	N	N	N	N	N					
246	N	N	N	N	N	N				
247	N	N	N	N	N	N	N			
248	N	N	N	N	N	N	N	N		
249	N	N	N	N	N	N	N	N	N	
250	N	N	N	N	N	N	N	N	N	N
251	N1									
252	N1	N1								
253	N1	N1	N1							
254	N1	N1	N1	N1						
255	N1	N1	N1	N1	N1					
256	N1	N1	N1	N1	N1	N1				
257	N1	N1	N1	N1	N1	N1	N1			
258	N1	N1	N1	N1	N1	N1	N1	N1		
259	N1	N1	N1	N1	N1	N1	N1	N1	N1	
260	N1	N1	N1	N1	N1	N1	N1	N1	N1	N1
261	P									
262	P	P								
263	P	P	P							
264	P	P	P	P						
265	P	P	P	P	P					
266	P	P	P	P	P	P				
267	P	P	P	P	P	P	P			
268	P	P	P	P	P	P	P	P		
269	P	P	P	P	P	P	P	P	P	
270	P	P	P	P	P	P	P	P	P	P

TABLE II. Switch Assembly - Continued.

Part Number M22710/20	Switch station module number									
	1	2	3	4	5	6	7	8	9	10
271	P1									
272	P1	P1								
273	P1	P1	P1							
274	P1	P1	P1	P1						
275	P1	P1	P1	P1	P1					
276	P1	P1	P1	P1	P1	P1				
277	P1	P1	P1	P1	P1	P1	P1			
278	P1	P1	P1	P1	P1	P1	P1	P1		
279	P1	P1	P1	P1	P1	P1	P1	P1	P1	
280	P1	P1	P1	P1	P1	P1	P1	P1	P1	P1
281	R									
282	R	R								
283	R	R	R							
284	R	R	R	R						
285	R	R	R	R	R					
286	R	R	R	R	R	R				
287	R	R	R	R	R	R	R			
288	R	R	R	R	R	R	R	R		
289	R	R	R	R	R	R	R	R	R	
290	R	R	R	R	R	R	R	R	R	R
291	R1									
292	R1	R1								
293	R1	R1	R1							
294	R1	R1	R1	R1						
295	R1	R1	R1	R1	R1					
296	R1	R1	R1	R1	R1	R1				
297	R1	R1	R1	R1	R1	R1	R1			
298	R1	R1	R1	R1	R1	R1	R1	R1		
299	R1	R1	R1	R1	R1	R1	R1	R1	R1	
300	R1	R1	R1	R1	R1	R1	R1	R1	R1	R1
301	H1	H1	S1							
302	H 1/	H	S							
303	A2									
304	A2	A2								
305	A2	A2	A2							
306	A2	A2	A2	A2						
307	A2	A2	A2	A2	A2					
308	A2	A2	A2	A2	A2	A2				
309	A2	A2	A2	A2	A2	A2	A2			
310	A2	A2	A2	A2	A2	A2	A2	A2		
311	A2	A2	A2	A2	A2	A2	A2	A2	A2	
312	A2	A2	A2	A2	A2	A2	A2	A2	A2	A2

1/ Stops are provided when dial reads 0 and 4.

TABLE II. Switch Assembly - Continued.

Part Number M22710/20	Switch station module number									
	1	2	3	4	5	6	7	8	9	10
313	A3									
314	A3	A3								
315	A3	A3	A3							
316	A3	A3	A3	A3						
317	A3	A3	A3	A3	A3					
318	A3	A3	A3	A3	A3	A3				
319	A3	A3	A3	A3	A3	A3	A3			
320	A3	A3	A3	A3	A3	A3	A3	A3		
321	A3	A3	A3	A3	A3	A3	A3	A3	A3	
322	A3	A3	A3	A3	A3	A3	A3	A3	A3	A3
323	B2									
324	B2	B2								
325	B2	B2	B2							
326	B2	B2	B2	B2						
327	B2	B2	B2	B2	B2					
328	B2	B2	B2	B2	B2	B2				
329	B2	B2	B2	B2	B2	B2	B2			
330	B2	B2	B2	B2	B2	B2	B2	B2		
331	B2	B2	B2	B2	B2	B2	B2	B2	B2	
332	B2	B2	B2	B2	B2	B2	B2	B2	B2	B2
333	B3									
334	B3	B3								
335	B3	B3	B3							
336	B3	B3	B3	B3						
337	B3	B3	B3	B3	B3					
338	B3	B3	B3	B3	B3	B3				
339	B3	B3	B3	B3	B3	B3	B3			
340	B3	B3	B3	B3	B3	B3	B3	B3		
341	B3	B3	B3	B3	B3	B3	B3	B3	B3	
342	B3	B3	B3	B3	B3	B3	B3	B3	B3	B3
343	C2									
344	C2	C2								
345	C2	C2	C2							
346	C2	C2	C2	C2						
347	C2	C2	C2	C2	C2					
348	C2	C2	C2	C2	C2	C2				
349	C2	C2	C2	C2	C2	C2	C2			
350	C2	C2	C2	C2	C2	C2	C2	C2		
351	C2	C2	C2	C2	C2	C2	C2	C2	C2	
352	C2	C2	C2	C2	C2	C2	C2	C2	C2	C2
353	C3									
354	C3	C3								
355	C3	C3	C3							
356	C3	C3	C3	C3						
357	C3	C3	C3	C3	C3					
358	C3	C3	C3	C3	C3	C3				
359	C3	C3	C3	C3	C3	C3	C3			
360	C3	C3	C3	C3	C3	C3	C3	C3		
361	C3	C3	C3	C3	C3	C3	C3	C3	C3	
362	C3	C3	C3	C3	C3	C3	C3	C3	C3	C3

TABLE II. Switch Assembly - Continued.

Part Number M22710/20	Switch station module number									
	1	2	3	4	5	6	7	8	9	10
363	D2									
364	D2	D2								
365	D2	D2	D2							
366	D2	D2	D2	D2						
367	D2	D2	D2	D2	D2					
368	D2	D2	D2	D2	D2	D2				
369	D2	D2	D2	D2	D2	D2	D2			
370	D2	D2	D2	D2	D2	D2	D2	D2		
371	D2	D2	D2	D2	D2	D2	D2	D2	D2	
372	D2	D2	D2	D2	D2	D2	D2	D2	D2	D2
373	D3									
374	D3	D3								
375	D3	D3	D3							
376	D3	D3	D3	D3						
377	D3	D3	D3	D3	D3					
378	D3	D3	D3	D3	D3	D3				
379	D3	D3	D3	D3	D3	D3	D3			
380	D3	D3	D3	D3	D3	D3	D3	D3		
381	D3	D3	D3	D3	D3	D3	D3	D3	D3	
382	D3	D3	D3	D3	D3	D3	D3	D3	D3	D3
383	E2									
384	E2	E2								
385	E2	E2	E2							
386	E2	E2	E2	E2						
387	E2	E2	E2	E2	E2					
388	E2	E2	E2	E2	E2	E2				
389	E2	E2	E2	E2	E2	E2	E2			
390	E2	E2	E2	E2	E2	E2	E2	E2		
391	E2	E2	E2	E2	E2	E2	E2	E2	E2	
392	E2	E2	E2	E2	E2	E2	E2	E2	E2	E2
393	E3									
394	E3	E3								
395	E3	E3	E3							
396	E3	E3	E3	E3						
397	E3	E3	E3	E3	E3					
398	E3	E3	E3	E3	E3	E3				
399	E3	E3	E3	E3	E3	E3	E3			
400	E3	E3	E3	E3	E3	E3	E3	E3		
401	E3	E3	E3	E3	E3	E3	E3	E3	E3	
402	E3	E3	E3	E3	E3	E3	E3	E3	E3	E3
403	F2									
404	F2	F2								
405	F2	F2	F2							
406	F2	F2	F2	F2						
407	F2	F2	F2	F2	F2					
408	F2	F2	F2	F2	F2	F2				
409	F2	F2	F2	F2	F2	F2	F2			
410	F2	F2	F2	F2	F2	F2	F2	F2		
411	F2	F2	F2	F2	F2	F2	F2	F2	F2	
412	F2	F2	F2	F2	F2	F2	F2	F2	F2	F2

TABLE II. Switch Assembly - Continued.

Part Number M22710/20	Switch station module number									
	1	2	3	4	5	6	7	8	9	10
413	F3									
414	F3	F3								
415	F3	F3	F3							
416	F3	F3	F3	F3						
417	F3	F3	F3	F3	F3					
418	F3	F3	F3	F3	F3	F3				
419	F3	F3	F3	F3	F3	F3	F3			
420	F3	F3	F3	F3	F3	F3	F3	F3		
421	F3	F3	F3	F3	F3	F3	F3	F3	F3	
422	F3	F3	F3	F3	F3	F3	F3	F3	F3	F3
423	G2									
424	G2	G2								
425	G2	G2	G2							
426	G2	G2	G2	G2						
427	G2	G2	G2	G2	G2					
428	G2	G2	G2	G2	G2	G2				
429	G2	G2	G2	G2	G2	G2	G2			
430	G2	G2	G2	G2	G2	G2	G2	G2		
431	G2	G2	G2	G2	G2	G2	G2	G2	G2	
432	G2	G2	G2	G2	G2	G2	G2	G2	G2	G2
433	G3									
434	G3	G3								
435	G3	G3	G3							
436	G3	G3	G3	G3						
437	G3	G3	G3	G3	G3					
438	G3	G3	G3	G3	G3	G3				
439	G3	G3	G3	G3	G3	G3	G3			
440	G3	G3	G3	G3	G3	G3	G3	G3		
441	G3	G3	G3	G3	G3	G3	G3	G3	G3	
442	G3	G3	G3	G3	G3	G3	G3	G3	G3	G3
443	H2									
444	H2	H2								
445	H2	H2	H2							
446	H2	H2	H2	H2						
447	H2	H2	H2	H2	H2					
448	H2	H2	H2	H2	H2	H2				
449	H2	H2	H2	H2	H2	H2	H2			
450	H2	H2	H2	H2	H2	H2	H2	H2		
451	H2	H2	H2	H2	H2	H2	H2	H2	H2	
452	H2	H2	H2	H2	H2	H2	H2	H2	H2	H2
453	H3									
454	H3	H3								
455	H3	H3	H3							
456	H3	H3	H3	H3						
457	H3	H3	H3	H3	H3					
458	H3	H3	H3	H3	H3	H3				
459	H3	H3	H3	H3	H3	H3	H3			
460	H3	H3	H3	H3	H3	H3	H3	H3		
461	H3	H3	H3	H3	H3	H3	H3	H3	H3	
462	H3	H3	H3	H3	H3	H3	H3	H3	H3	H3

TABLE II. Switch Assembly - Continued.

Part Number M22710/20	Switch station module number									
	1	2	3	4	5	6	7	8	9	10
463	J2									
464	J2	J2								
465	J2	J2	J2							
466	J2	J2	J2	J2						
467	J2	J2	J2	J2	J2					
468	J2	J2	J2	J2	J2	J2				
469	J2	J2	J2	J2	J2	J2	J2			
470	J2	J2	J2	J2	J2	J2	J2	J2		
471	J2	J2	J2	J2	J2	J2	J2	J2	J2	
472	J2	J2	J2	J2	J2	J2	J2	J2	J2	J2
473	J3									
474	J3	J3								
475	J3	J3	J3							
476	J3	J3	J3	J3						
477	J3	J3	J3	J3	J3					
478	J3	J3	J3	J3	J3	J3				
479	J3	J3	J3	J3	J3	J3	J3			
480	J3	J3	J3	J3	J3	J3	J3	J3		
481	J3	J3	J3	J3	J3	J3	J3	J3	J3	
482	J3	J3	J3	J3	J3	J3	J3	J3	J3	J3
483	K2									
484	K2	K2								
485	K2	K2	K2							
486	K2	K2	K2	K2						
487	K2	K2	K2	K2	K2					
488	K2	K2	K2	K2	K2	K2				
489	K2	K2	K2	K2	K2	K2	K2			
490	K2	K2	K2	K2	K2	K2	K2	K2		
491	K2	K2	K2	K2	K2	K2	K2	K2	K2	
492	K2	K2	K2	K2	K2	K2	K2	K2	K2	K2
493	K3									
494	K3	K3								
495	K3	K3	K3							
496	K3	K3	K3	K3						
497	K3	K3	K3	K3	K3					
498	K3	K3	K3	K3	K3	K3				
499	K3	K3	K3	K3	K3	K3	K3			
500	K3	K3	K3	K3	K3	K3	K3	K3		
501	K3	K3	K3	K3	K3	K3	K3	K3	K3	
502	K3	K3	K3	K3	K3	K3	K3	K3	K3	K3
503	L2									
504	L2	L2								
505	L2	L2	L2							
506	L2	L2	L2	L2						
507	L2	L2	L2	L2	L2					
508	L2	L2	L2	L2	L2	L2				
509	L2	L2	L2	L2	L2	L2	L2			
510	L2	L2	L2	L2	L2	L2	L2	L2		
511	L2	L2	L2	L2	L2	L2	L2	L2	L2	
512	L2	L2	L2	L2	L2	L2	L2	L2	L2	L2

TABLE II. Switch Assembly - Continued.

Part Number M22710/20	Switch station module number									
	1	2	3	4	5	6	7	8	9	10
513	L3									
514	L3	L3								
515	L3	L3	L3							
516	L3	L3	L3	L3						
517	L3	L3	L3	L3	L3					
518	L3	L3	L3	L3	L3	L3				
519	L3	L3	L3	L3	L3	L3	L3			
520	L3	L3	L3	L3	L3	L3	L3	L3		
521	L3	L3	L3	L3	L3	L3	L3	L3	L3	
522	L3	L3	L3	L3	L3	L3	L3	L3	L3	L3
523	M2									
524	M2	M2								
525	M2	M2	M2							
526	M2	M2	M2	M2						
527	M2	M2	M2	M2	M2					
528	M2	M2	M2	M2	M2	M2				
529	M2	M2	M2	M2	M2	M2	M2			
530	M2	M2	M2	M2	M2	M2	M2	M2		
531	M2	M2	M2	M2	M2	M2	M2	M2	M2	
532	M2	M2	M2	M2	M2	M2	M2	M2	M2	M2
533	M3									
534	M3	M3								
535	M3	M3	M3							
536	M3	M3	M3	M3						
537	M3	M3	M3	M3	M3					
538	M3	M3	M3	M3	M3	M3				
539	M3	M3	M3	M3	M3	M3	M3			
540	M3	M3	M3	M3	M3	M3	M3	M3		
541	M3	M3	M3	M3	M3	M3	M3	M3	M3	
542	M3	M3	M3	M3	M3	M3	M3	M3	M3	M3
543	N2									
544	N2	N2								
545	N2	N2	N2							
546	N2	N2	N2	N2						
547	N2	N2	N2	N2	N2					
548	N2	N2	N2	N2	N2	N2				
549	N2	N2	N2	N2	N2	N2	N2			
550	N2	N2	N2	N2	N2	N2	N2	N2		
551	N2	N2	N2	N2	N2	N2	N2	N2	N2	
552	N2	N2	N2	N2	N2	N2	N2	N2	N2	N2
553	N3									
554	N3	N3								
555	N3	N3	N3							
556	N3	N3	N3	N3						
557	N3	N3	N3	N3	N3					
558	N3	N3	N3	N3	N3	N3				
559	N3	N3	N3	N3	N3	N3	N3			
560	N3	N3	N3	N3	N3	N3	N3	N3		
561	N3	N3	N3	N3	N3	N3	N3	N3	N3	
562	N3	N3	N3	N3	N3	N3	N3	N3	N3	N3

TABLE II. Switch Assembly - Continued.

Part Number M22710/20	Switch station module number									
	1	2	3	4	5	6	7	8	9	10
563	P2									
564	P2	P2								
565	P2	P2	P2							
566	P2	P2	P2	P2						
567	P2	P2	P2	P2	P2					
568	P2	P2	P2	P2	P2	P2				
569	P2	P2	P2	P2	P2	P2	P2			
570	P2	P2	P2	P2	P2	P2	P2	P2		
571	P2	P2	P2	P2	P2	P2	P2	P2	P2	
572	P2	P2	P2	P2	P2	P2	P2	P2	P2	P2
573	P3									
574	P3	P3								
575	P3	P3	P3							
576	P3	P3	P3	P3						
577	P3	P3	P3	P3	P3					
578	P3	P3	P3	P3	P3	P3				
579	P3	P3	P3	P3	P3	P3	P3			
580	P3	P3	P3	P3	P3	P3	P3	P3		
581	P3	P3	P3	P3	P3	P3	P3	P3	P3	
582	P3	P3	P3	P3	P3	P3	P3	P3	P3	P3
583	R2									
584	R2	R2								
585	R2	R2	R2							
586	R2	R2	R2	R2						
587	R2	R2	R2	R2	R2					
588	R2	R2	R2	R2	R2	R2				
589	R2	R2	R2	R2	R2	R2	R2			
590	R2	R2	R2	R2	R2	R2	R2	R2		
591	R2	R2	R2	R2	R2	R2	R2	R2	R2	
592	R2	R2	R2	R2	R2	R2	R2	R2	R2	R2
593	R3									
594	R3	R3								
595	R3	R3	R3							
596	R3	R3	R3	R3						
597	R3	R3	R3	R3	R3					
598	R3	R3	R3	R3	R3	R3				
599	R3	R3	R3	R3	R3	R3	R3			
600	R3	R3	R3	R3	R3	R3	R3	R3		
601	R3	R3	R3	R3	R3	R3	R3	R3	R3	
602	R3	R3	R3	R3	R3	R3	R3	R3	R3	R3

REQUIREMENTS

Dimensions and configuration: See figures 1, 2 and 3.

Construction: D.

Indexing: 36 or 45 degrees. See truth tables in figure 3.

Stops: When applicable, 5 pounds.

Temperature-life characteristics: B. For lighted switches, maximum temperature is 71° C.

Vibration grade: 3 (15g, 10 - 20,000 Hz).

Shock type: M (100g) and H (high-impact). Methods I and II of MIL-PRF-22710 are applicable.

Altitude: C (0 - 70,000 feet).

Terminal design: see figure 3.

Terminal strength:
5 pounds for wire lead terminals and for modules G, K and R.
10 pounds for printed circuit board terminals.

Contact resistance: For wire lead terminals, measurement is exclusive of lead length.

Moisture resistance: Method II of MIL-PRF-22710.

Luminance" For illuminated switches only (see table III).

TABLE III. Photometric brightness.

Lamp	Switch filter	Brightness with dual lamps	Rating (per lamp)	
			Volts	Amperes
M6363/6 or equivalent	Clear	2.0 ± 1.0 foot-lamberts	5	0.60
	Red	1.0 ± 0.5 foot-lamberts	5	.075

Operating force (tangential): 6 ounces minimum, 22 ounces maximum.

Seal: Method I of MIL-PRF-22710. (NOTE: Only individual switch modules are sealed. When a switch assembly is to be used in applications requiring sealed panels or enclosures, special provisions must be made to provide suitable seal(s) for the complete switch assembly.)

Dielectric withstanding voltage:
750 volts rms at atmospheric pressure.
250 volts rms at reduced barometric pressure, test condition C.

Acceleration: Applicable (20g).

Sand and dust: Applicable.

Explosion: Applicable.

RFI shielding: Applicable, where specified.

Life (rotational): Method 206, test condition G, MIL-STD-202 (see table IV).

TABLE IV. Electrical test load.

Test or condition	Resistive	
At atmospheric pressure	0.125 Ampere	28 V dc
At reduced barometric pressure	0.125 Ampere	28 V dc
Life (low level)	10 mA	30 mV dc

Military part number: See tables I and II.

Additional group A testing

In addition to the tests specified for group A inspection, the following additional procedure and requirement are applicable to item where RFI shielding is specified:

RFI Shielding - The switch shall be mounted by its normal mounting means to an electrically conductive panel. The resistance shall be measured from the RFI shielding (on the switch) to the mounting panel. The measured resistance shall not exceed 1 ohm.

CAUTION: Isopropyl alcohol recommended for cleaning and solder-flux removal. Avoid the use of acids, ammonia, chlorinated or aromatic hydrocarbons, and oxygenated solvents.

Custodians:
Army - CR
Navy- EC
Air Force - 11
DLA - CC

Review activities:
Army - CR4, MI, SM
Navy - AS, MC

Preparing Activity:
DLA - CC

(Project 5930-1724-07)