INCH-POUND
MIL-PRF-22710/18K
8 December 2014
SUPERSEDING
MIL-PRF-22710/18J
27 August 2012

PERFORMANCE SPECIFICATION SHEET

SWITCHES, CODE INDICATING WHEEL (PRINTED CIRCUIT), (PUSHBUTTON, BIDIRECTIONAL, SEALED OR UNSEALED, EMI/RFI SHIELDED, ILLUMINATED OR NONILLUMINATED) STYLE SRPC18-1 AND -2

This specification sheet is approved for use by all Departments and Agencies of the Department of Defense.

The requirements for acquiring the product described herein shall consist of this specification sheet and MIL-PRF-22710.

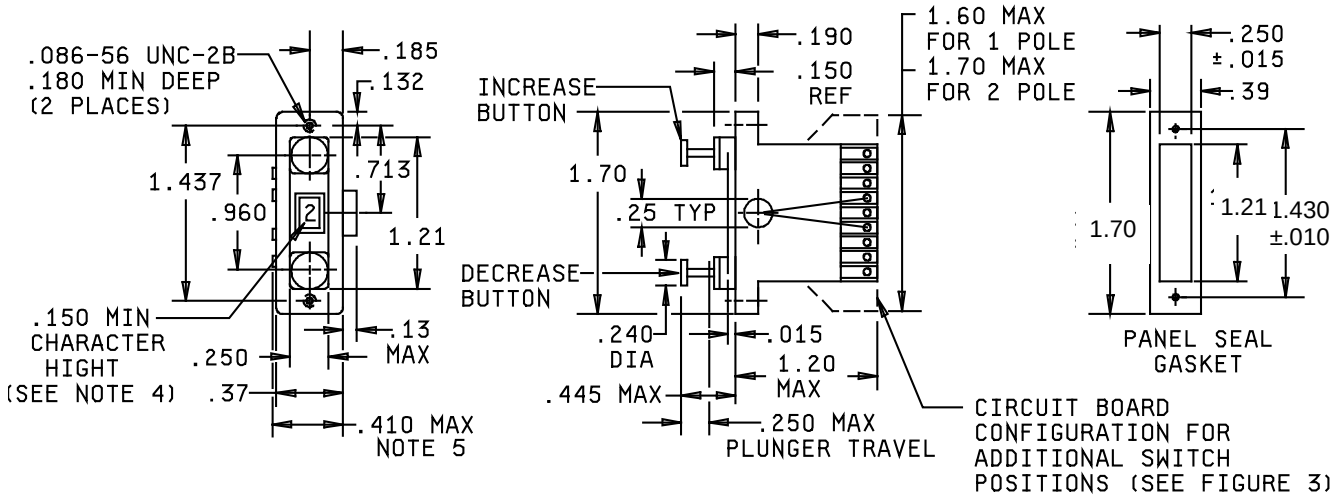

NOTES:
1. Dimensions are in inches.
2. Metric equivalents are given for general information only. 1 inch = 25.4 mm
3. Unless otherwise specified, tolerances are ± .005 (.13 mm) for three place decimals and ± .02 (.5mm) for two place decimals.
4. Readout characters: See figure 3 and table I.
5. .13 inch (3.3 mm) maximum dimension applies to light installation only.
6. When a sealed switch configuration is specified, a gasket (.031 inch (.79 mm) thick) made of a material that allows the switch to meet the performance requirements of this specification shall be furnished.

FIGURE 1. Style SRPC18-1 switch.

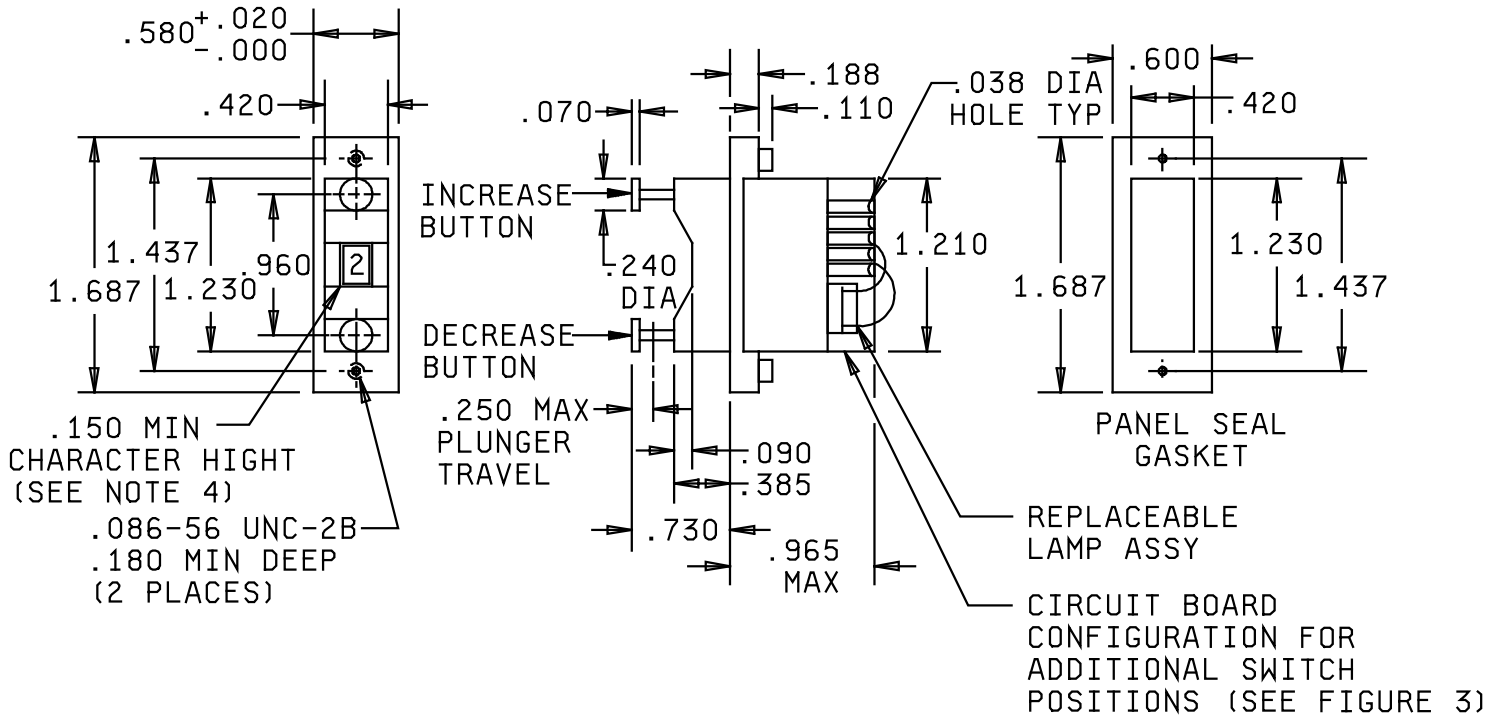

NOTES:

1. Dimensions are in inches.
2. Metric equivalents are given for general information only. 1 inch = 25.4 mm
3. Unless otherwise specified, tolerances are ± .005 (.13 mm) for three place decimals and ± .02 (.5mm) for two place decimals.
4. Readout characters: See figure 3 and table I.
5. .13 inch (3.3 mm) maximum dimension applies to light installation only.
6. When a sealed switch configuration is specified, a gasket (.031 inch (.79 mm) thick) made of a material that allows the switch to meet the performance requirements of this specification shall be furnished.

FIGURE 2. Style SRPC18-2 switch.

NO. 1 45° INDEXING

DIAL READS	COMMON C CONNECTED TO TERMINALS							
	0	1	2	3	4	5	6	7
0	•							
1		•						
2			•					
3				•				
4					•			
5						•		
6							•	
7								•

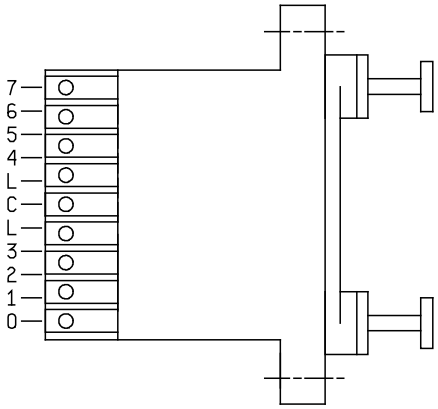

NO. 2 45° INDEXING
CONTACTS ARE SHORTING
MAKE BEFORE BREAK

DIAL READS	COMMON C CONNECTED TO TERMINALS							
	0	1	2	3	4	5	6	7
0	•							
1		•						
2			•					
3				•				
4					•			
5						•		
6							•	
7								•

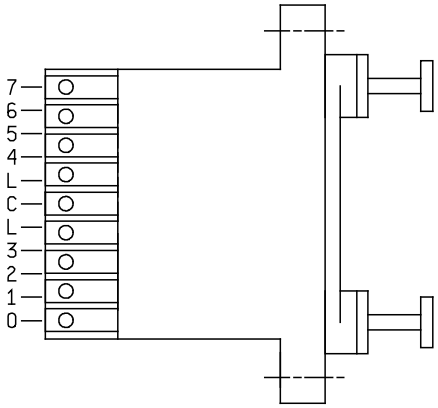

NO. 3 45° INDEXING

DIAL READS	COMMON C CONNECTED TO TERMINALS		
	1	2	4
0			
1	•		
2		•	
3	•	•	
4			•
5	•		•
6		•	•
7	•	•	•

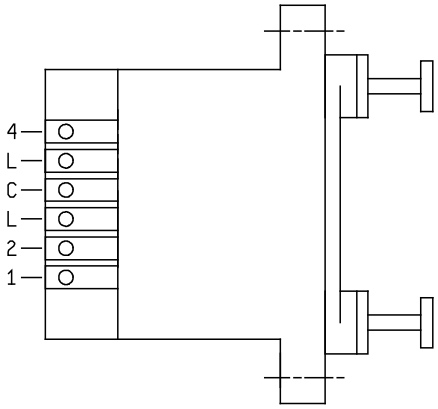

FIGURE 3. Terminal design and configuration.

NO. 4 45° INDEXING

DIAL READS	COMMON C CONNECTED TO TERMINALS			
	0	1	2	4
0	•			
1		•		
2			•	
3		•	•	
4				•
5		•		•
6			•	•
7		•	•	•

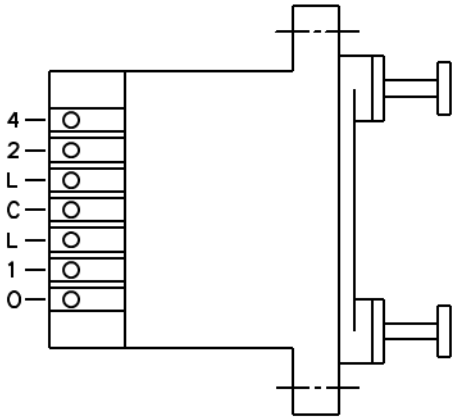

NO. 5 45° INDEXING

DIAL READS	COMMON C CONNECTED TO TERMINALS					
	1	2	4	$\overline{1}$	$\overline{2}$	$\overline{4}$
0				•	•	•
1	•				•	•
2		•		•		•
3	•	•				•
4			•	•	•	
5	•		•		•	
6		•	•	•		
7	•	•	•			

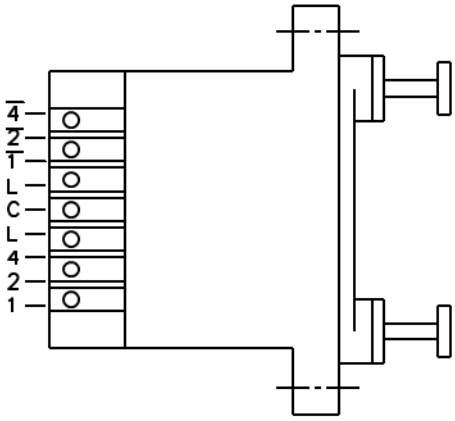

No. 6 36° INDEXING

DIAL READS	COMMON C CONNECTS TO TERMINAL									
	0	1	2	3	4	5	6	7	8	9
0	•									
1		•								
2			•							
3				•						
4					•					
5						•				
6							•			
7								•		
8									•	
9										•

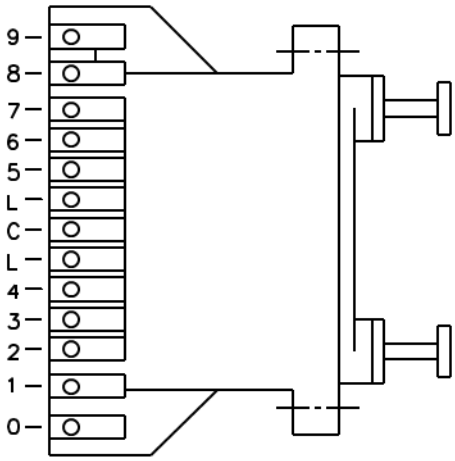

FIGURE 3. Terminal design and configuration - Continued.

No. 7 36° INDEXING
CONTACTS ARE SHORTING
MAKE BEFORE BREAK

DIAL READS	COMMON C CONNECTS TO TERMINAL									
	0	1	2	3	4	5	6	7	8	9
0	•									
1		•								
2			•							
3				•						
4					•					
5						•				
6							•			
7								•		
8									•	
9										•

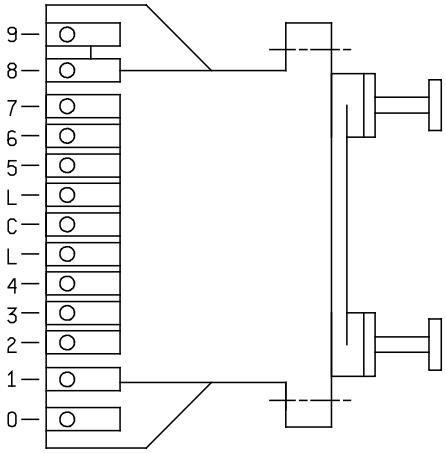

NO. 8 36° INDEXING

DIAL READS	COMMON C CONNECTED TO TERMINALS			
	1	2	4	8
0				
1	•			
2		•		
3	•	•		
4			•	
5	•		•	
6		•	•	
7	•	•	•	
8				•
9	•			•

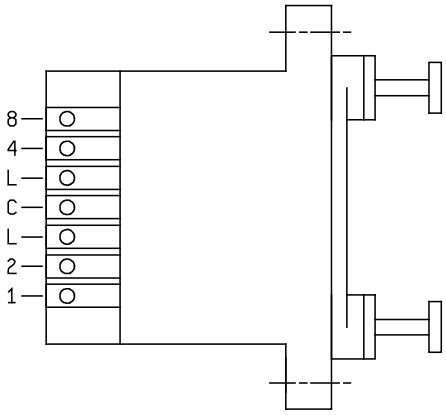

NO. 9 36° INDEXING

DIAL READS	COMMON C CONNECTED TO TERMINALS				
	1	2	4	8	P
0					•
1	•				
2		•			
3	•	•			•
4			•		
5	•		•		•
6		•	•		•
7	•	•	•		
8				•	
9	•			•	•

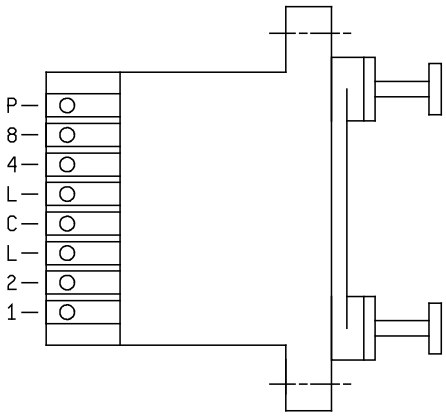

FIGURE 3. Terminal design and configuration - Continued.

NO. 10 36° INDEXING

DIAL READS	COMMON C CONNECTED TO TERMINALS			
	1	2	4	8
0	•	•		
1			•	
2	•		•	
3	•	•		
4			•	
5	•		•	
6		•	•	
7	•	•	•	
8				•
9	•			•

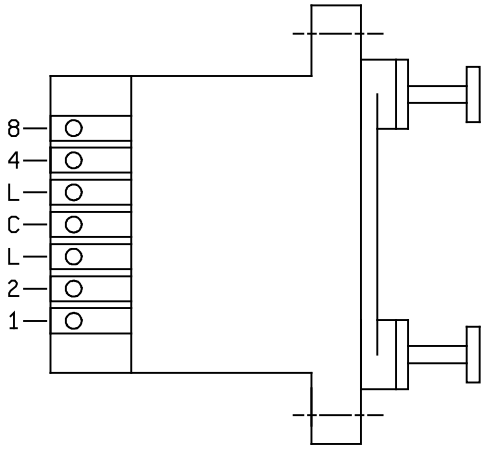

NO. 11 36° INDEXING

DIAL READS	COMMON C CONNECTED TO TERMINALS							
	1	2	4	8	$\overline{1}$	$\overline{2}$	$\overline{4}$	$\overline{8}$
0					•	•	•	•
1	•					•	•	•
2		•			•		•	•
3	•	•					•	•
4			•		•	•		•
5	•		•			•		•
6		•	•		•			•
7	•	•	•					•
8				•	•	•	•	
9	•			•		•	•	

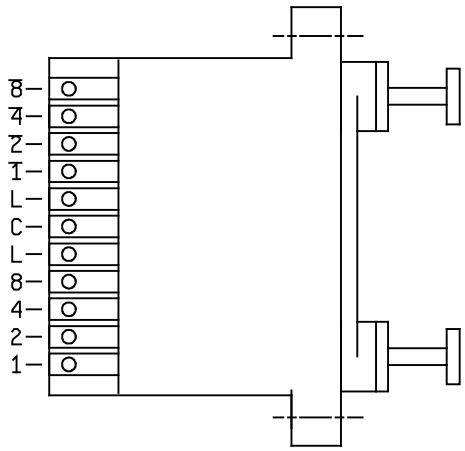

NO. 12 30° INDEXING

DIAL READS	COMMON C CONNECTOR TO TERMINAL											
	0	1	2	3	4	5	6	7	8	9	10	11
0	•											
1		•										
2			•									
3				•								
4					•							
5						•						
6							•					
7								•				
8									•			
9										•		
10											•	
11												•

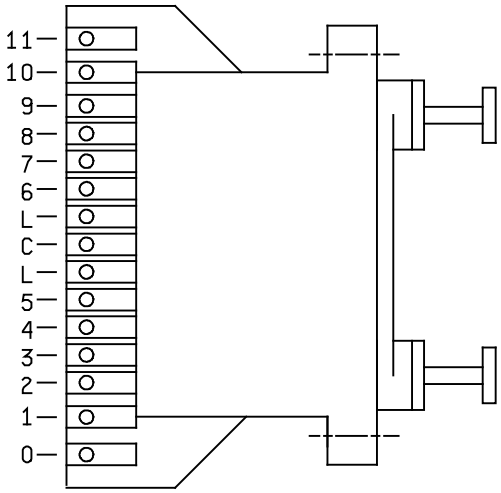

FIGURE 3. Terminal design and configuration - Continued.

NO. 13 30° INDEXING
CONTACTS ARE SHORTING
MAKE BEFORE BREAK

DIAL READS	COMMON C CONNECTED TO TERMINAL											
	0	1	2	3	4	5	6	7	8	9	10	11
0	•											
1		•										
2			•									
3				•								
4					•							
5						•						
6							•					
7								•				
8									•			
9										•		
10											•	
11												•

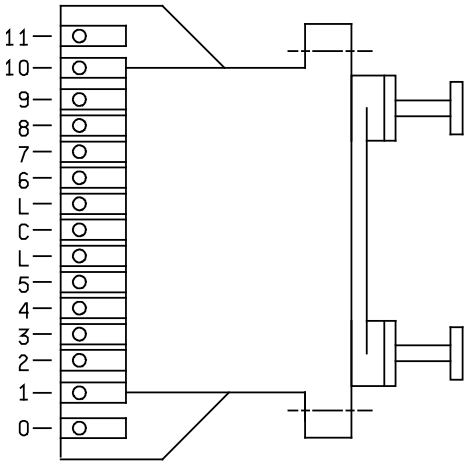

NO. 14 30° INDEXING

DIAL READS	COMMON C CONNECTED TO TERMINAL			
	1	2	4	8
0				
1	•			
2		•		
3	•	•		
4			•	
5	•		•	
6		•	•	
7	•	•	•	
8				•
9	•			•
10		•		•
11	•	•		•

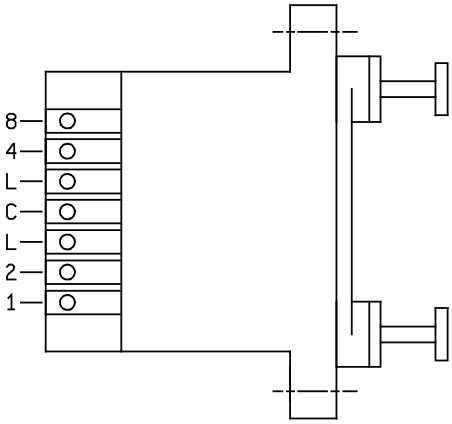

NO. 15 30° INDEXING

DIAL READS	COMMON C CONNECTED TO TERMINALS							
	1	2	4	8	$\overline{1}$	$\overline{2}$	$\overline{4}$	$\overline{8}$
0					•	•	•	•
1	•					•	•	•
2		•			•		•	•
3	•	•					•	•
4			•		•	•		•
5	•		•			•		•
6		•	•		•			•
7	•	•	•					•
8				•	•	•	•	
9	•			•		•	•	
10		•		•	•		•	
11	•	•		•			•	

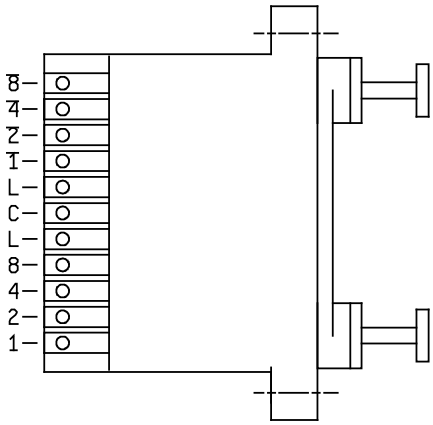

FIGURE 3. Terminal design and configuration - Continued.

DIAL READS	COMMON C CONNECTED TO TERMINAL											
	0	1	2	3	4	5	6	7	8	9	10	11
0	•											
1		•										
2			•									
3				•								
4					•							
5						•						
6							•					
7								•				
8									•			
9										•		
10											•	
11												•

DIAL READS	COMMON C CONNECTED TO TERMINAL											
	$\overline{0}$	$\overline{1}$	$\overline{2}$	$\overline{3}$	$\overline{4}$	$\overline{5}$	$\overline{6}$	$\overline{7}$	$\overline{8}$	$\overline{9}$	$\overline{10}$	$\overline{11}$
0	•											
1		•										
2			•									
3				•								
4					•							
5						•						
6							•					
7								•				
8									•			
9										•		
10											•	
11												•

NO. 16 30° INDEXING
2 POLE

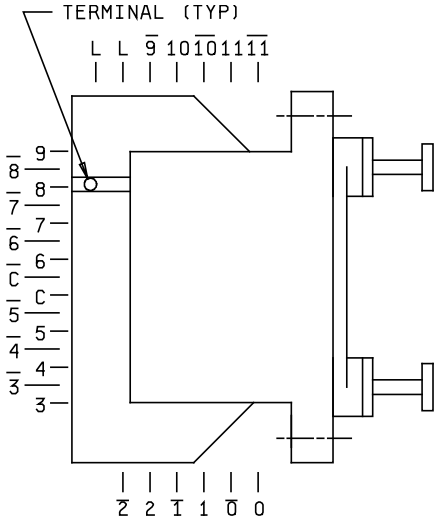

DIAL READS	COMMON C CONNECTED TO TERMINAL									
	0	1	2	3	4	5	6	7	8	9
0	•									
1		•								
2			•							
3				•						
4					•					
5						•				
6							•			
7								•		
8									•	
9										•

DIAL READS	COMMON C CONNECTED TO TERMINAL									
	$\overline{0}$	$\overline{1}$	$\overline{2}$	$\overline{3}$	$\overline{4}$	$\overline{5}$	$\overline{6}$	$\overline{7}$	$\overline{8}$	$\overline{9}$
0	•									
1		•								
2			•							
3				•						
4					•					
5						•				
6							•			
7								•		
8									•	
9										•

NO. 17 36° INDEXING
2 POLE

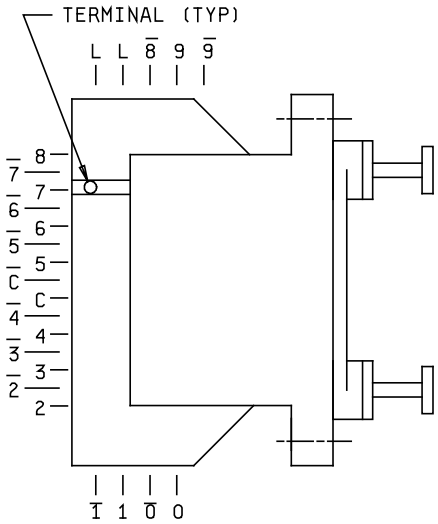

FIGURE 3. Terminal design and configuration - Continued.

DIAL READS	COMMON C CONNECTED TO TERMINAL							
	0	1	2	3	4	5	6	7
0	•							
1		•						
2			•					
3				•				
4					•			
5						•		
6							•	
7								•

DIAL READS	COMMON C CONNECTED TO TERMINAL							
	$\overline{0}$	$\overline{1}$	$\overline{2}$	$\overline{3}$	$\overline{4}$	$\overline{5}$	$\overline{6}$	$\overline{7}$
0	•							
1		•						
2			•					
3				•				
4					•			
5						•		
6							•	
7								•

NO. 18 45° INDEXING
2 POLE

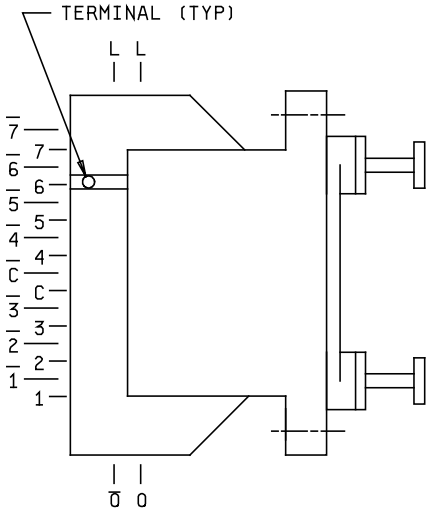

FIGURE 3. Terminal design and configuration - Continued.

TABLE III. Color of stamping and EMI/RFI shielding requirements.

Code	Readout characters	Type of lamp	EMI/RFI shielded
A	1/ B / W 2/	None	No
B	W / B	None	No
C	B / W	C 3/	No
D	W / B	C	No
E	B / W	R 4/	No
F	W / B	R	No
G	B / W	None	Yes
H	W / B	None	Yes
J	B / W	C	Yes
K	W / B	C	Yes
L	B / W	R	Yes
M	W / B	R	Yes

1/ Color of stamping on wheel B (black) or W (white)
2/ Color of background B (black) or W (white)
3/ Color of lamp C (clear)
4/ Color of lamp R (red)

TABLE IV Suppression data.

Superseded Military Part number M22710/18-	Superseding Military Part number M22710/18-	Superseded Military Part number M22710/18-	Superseding Military Part number M22710/18-	Superseded Military Part number M22710/18-	Superseding Military Part number M22710/18-
001	1U1A	025	1U13A	049	1S10A
002	1U1B	026	1U13B	050	1S10B
003	1U2A	027	1U14A	051	1S11A
004	1U2B	028	1U14B	052	1S11B
005	1U3A	029	1U15A	053	1S12A
006	1U3B	030	1U15B	054	1S12B
007	1U4A	031	1S1A	055	1S13A
008	1U4B	032	1S1B	056	1S13B
009	1U5A	033	1S2A	057	1S14A
010	1U5B	034	1S2B	058	1S14B
011	1U6A	035	1S3A	059	1S15A
012	1U6B	036	1S3B	060	1S15B
013	1U7A	037	1S4A	061	1S16A
014	1U7B	038	1S4B	062	1S16A
015	1U8A	039	1S5A	063	1S16B
016	1U8B	040	1S5B	064	1S16B
017	1U9A	041	1S6A	065	1S17A
018	1U9B	042	1S6B	066	1S17A
019	1U10A	043	1S7A	067	1S17B
020	1U10B	044	1S7B	068	1S17B
021	1U11A	045	1S8A	069	1S18A
022	1U11B	046	1S8B	070	1S18A
023	1U12A	047	1S9A	071	1S18B
024	1U12B	048	1S9B	072	1S18B

Requirements:

Dimensions and configuration: See figures 1 and 2.

Construction: D.

Angle of throw indexing: 30°, 36°, and 45° indexing.

Temperature-life characteristic: D, test loads as shown in table 1. (For lighted switches, maximum temperature is 85° C).

TABLE I. Electrical test load.

Test or condition	Resistive	
At atmospheric pressure	0.125 A	28 V dc and 115 V ac
At reduced barometric pressure	0.05 A	28 V dc and 115 V ac
Dry circuit	10 mA	50 mv

Vibration grade: 3, (15g, 10 - 2, 000 Hz).

Shock type: M (100 g's).

Altitude rating: C (70.000 feet).

Terminal design: See figure 3.

Contact resistance:
Initial: 50 milliohms, maximum.
Following life (rotational): 70 milliohms, maximum.

Rotational torque (push force required to index from any detent position to the next): 20 ounces, minimum to 40 ounces, maximum.

Seal: Method II, when specified in part number code.

Dielectric withstanding voltage:
At atmospheric pressure: 1,000 volts, rms.
At reduced barometric pressure: 450 volts, rms.
Application of test voltage: Between the switch terminals and terminals to case.

Sand and dust: Applicable.

Explosion: Applicable.

Life (rotational): Test condition letter G, method 206 of MIL-STD-202. Lamps shall be energized at their maximum rated voltage.

EMI/RFI shielding; Applicable when specified (see table III).

Military part number: See part number code,

Luminance: illuminated and nonilluminated as shown in table II.

TABLE II. Luminance.

Lamp[1/]	Switch filter	Brightness	Rating	
			Volts	Amperes
M6363/4-2	Clear	1.50 ± .75 foot-lamberts	5	.060
M6363/4-2	Red	0.75 ± .50 foot-lamberts	5	.060

1/ Lamps are per MIL-DTL-6363/4.

Lamp failure: Lamp failure shall not be considered a unit failure, if when lamp failure is noted immediately and a new lamp is installed and the lamp functions. Test shall then be continued, as required.

MILITARY PART NUMBER CODE

M22710/18- 1 S 12 A

"1" Style SRPC /18-1 (when illuminated uses one lamp)

"2" Style SRPC /18-2 (when illuminated uses two lamps)

"S" Indicates sealed method II panel seal

"U" Indicates unsealed

Terminal design and construction 1 -18

Color of stamping of wheel and light requirement table III

Referenced Documents:

MIL-PRF-22710 MIL-STD-202 MIL-DTL-6363/4

The margins of this specification are marked with vertical lines to indicate where modifications were made. This was done as a convenience only and the Government assumes no liability whatsoever for any inaccuracies in these notations. Bidders and contractors are cautioned to evaluate the requirements of this document based on the entire content irrespective of the marginal notations.

Custodians:
Army - CR
Navy- EC
Air Force - 85
DLA - CC

Review activities:
Army - AR, CR4, SM
Navy - AS, MC
Air Force - 99

Preparing activity:
DLA - CC

(Project 5930-2014-010)

NOTE: The activities listed above were interested in this document as of the date of this document. Since organizations and responsibilities can change, you should verify the currency of the information above using the ASSIST Online database at https://assist.dla.mil.