INCH-POUND

MIL-PRF-22710/17J
20 April 2001

SUPERSEDING
MIL-S-22710/17H
30 September 1986

PERFORMANCE SPECIFICATION SHEET

SWITCHES, CODE INDICATING WHEEL (PRINTED CIRCUIT), PUSHBUTTON, SEALED, EMI/RFI SHIELDED, ILLUMINATED OR NONILLUMINATED, STYLE SRPC17

This specification is approved for use by all Departments and Agencies of the Department of Defense.

The requirements for acquiring the product described herein shall consist of this specification sheet and the issue of MIL-PRF-22710 listed in that issue of the Department of Defense Index of Specifications and Standards (DODISS) specified in the solicitation.

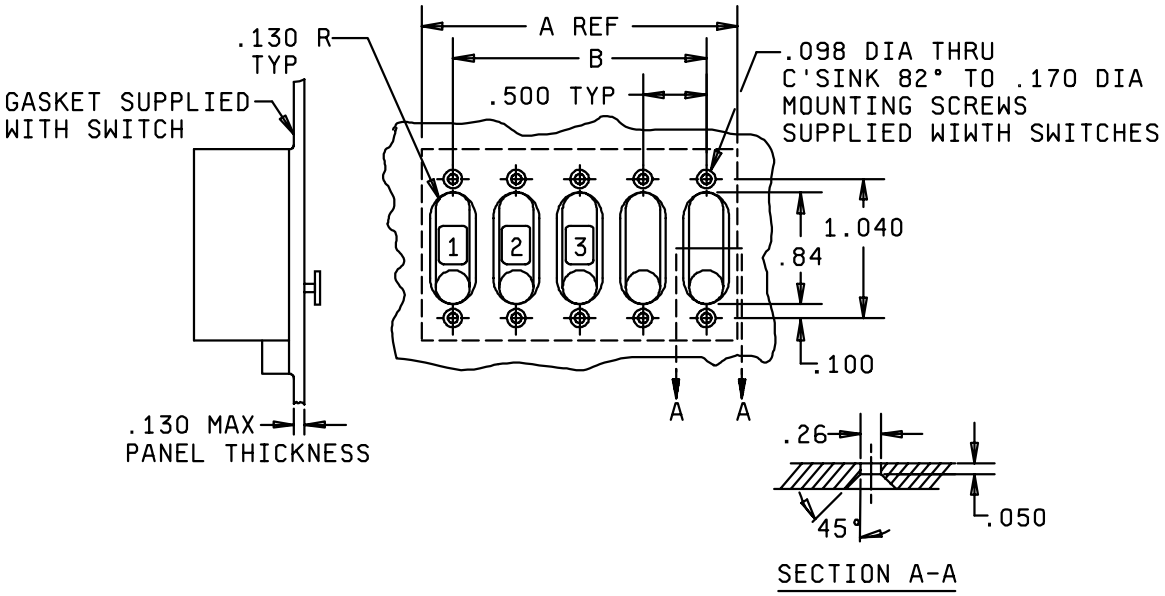

FIGURE 1. Style SRPC17 switch and panel cutout and installation data.

DISTRIBUTION STATEMENT A. Approved for public release; distribution is unlimited.

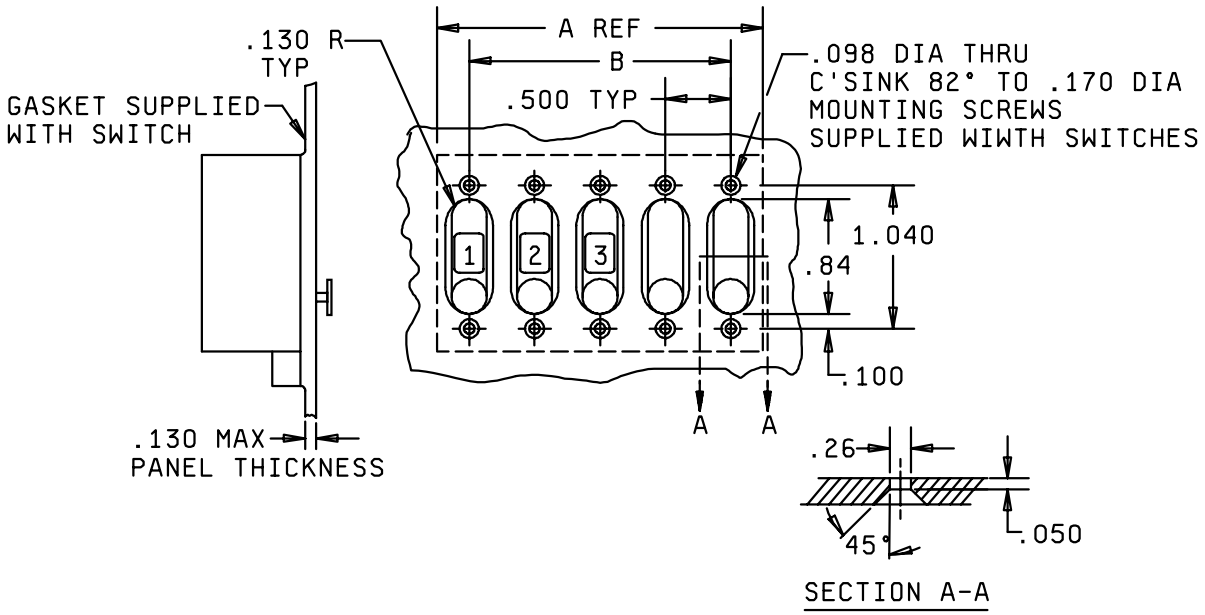

PANEL CUTOUT DETAIL WITH SWITCH INSTALLED

Number of Modules	A Ref	B
1	0.50 (12.70)	-
2	1.00 (25.40)	.50 (12.70)
3	1.50 (38.10)	1.00 (25.40)
4	2.0 (50.80)	1.50 (38.10)
5	2.50 (63.50)	2.0 (50.80)
6	3.00 (76.20)	2.50 (63.50)
7	3.50 (88.90)	3.00 (76.20)
8	4.0 (101.60)	3.50 (88.90)
9	4.5 (114.30)	4.0 (101.60)
10	5.0 (127.00)	4.5 (114.30)

Inches	mm	Inches	mm
.005	0.13	.260	6.60
.050	1.27	.420	10.70
.098	2.49	.480	12.19
.100	2.54	.500	12.70
.130	3.30	.840	21.30
.140	3.56	.945	24.00
.170	4.32	1.040	26.42
.175	4.45	1.160	29.46
.205	5.21	1.260	32.00
.215	5.46	1.310	33.27
.230	5.84	1.385	35.18
.250	6.35	1.540	39.10

NOTES:
1. Dimensions are in inches.
2. Millimeters are in parentheses.
3. Metric equivalents are given for general information only.
4. Unless otherwise specified, tolerance is ± 0.010 (0.25).
5. Applicable to illuminated switches only. Allowance for lighting terminals for externally replaceable lamps, when internal lighting is specified.
6. Housing, mounting, surface and actuator are metal constructed.
7. Switch case and dial pivot shall be made of a material that allows the switch to meet the performance requirements of this specification."
8. Mounting holes shall provide at least three full threads, tapped into the aluminum front panel.

FIGURE 1. Style SRPC17 switch and panel cutout and installation data - Continued.

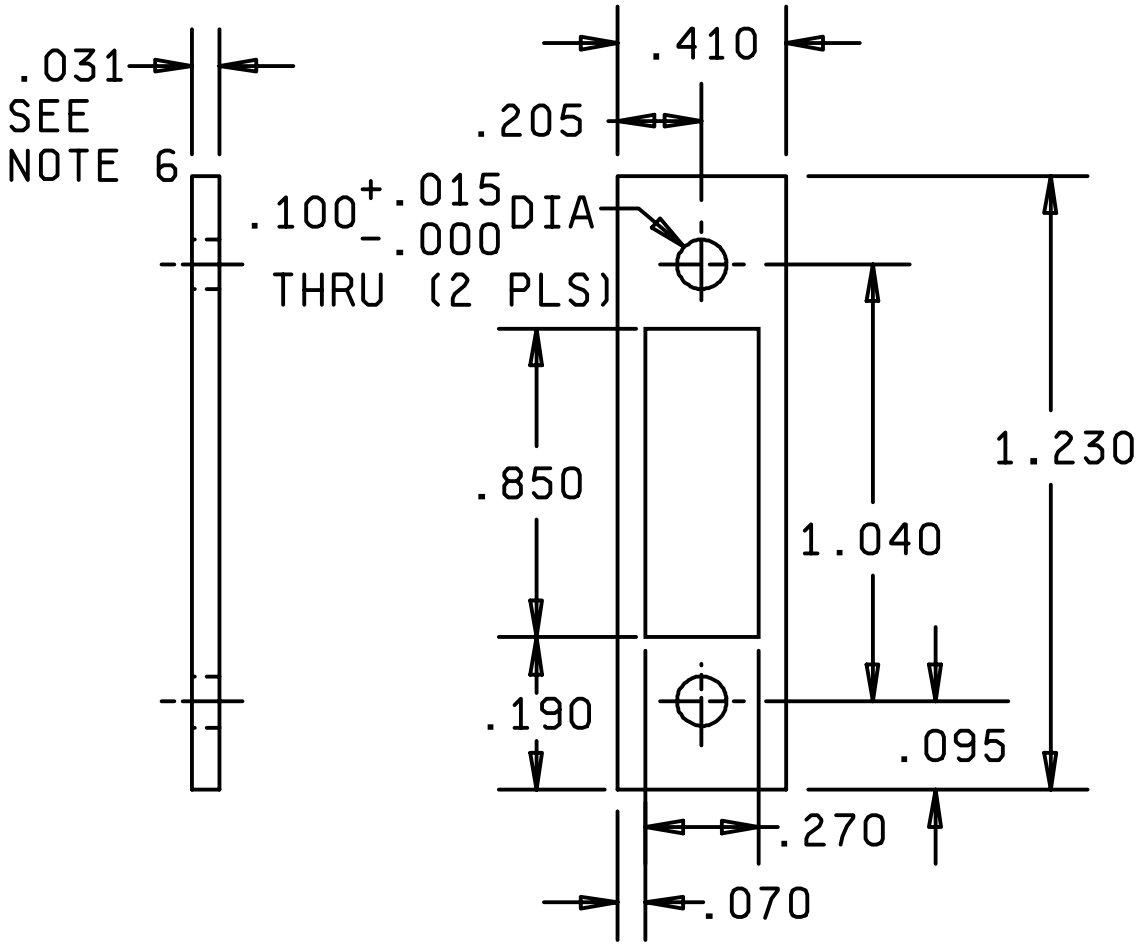

NOTES:
1. Dimensions are in inches.
2. Millimeters are in parentheses.
3. Metric equivalents are given for general information only.
4. Unless otherwise specified, tolerance is ± 0.05 (0.13) for three place decimals.
5. Panel seal gasket material shall be made of a material that allows the switch to meet the performance requirements of this specification.
6. For the RFI shielded switch, material thickness of the conductive panel seal gasket shall be .062 ± .015 (1.57 ± 0.38)

FIGURE 2. Panel seal gasket.

DIAL READS (1)	COMMON "A" CONNECTED TO		COMMON "B" CONNECTED TO	
	1	2	3	4
0	•		•	
1		•		•

(1) REPEATING DIAL

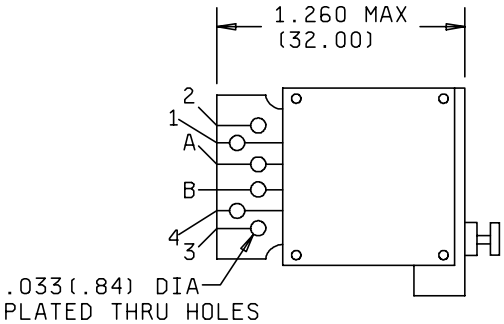

(1)	COMMON "A" CONNECTED TO		COMMON "B" CONNECTED TO	
	1	2	3	4
–	•		•	
+		•		•

(1) REPEATING DIAL

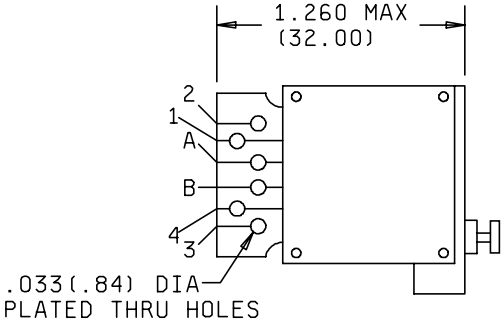

DIAL READS	DIAL POS	COMMON "C" CONNECTED TO
0	0	0
1	1	1
2	2	2
3	3	3
4	4	4
5	5	5
6	6	6
7	7	7

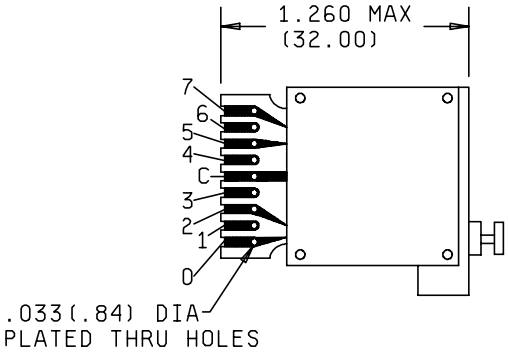

FIGURE 3. Terminal design and circuit configuration.

DIAL READS	DIAL POS	COMMON "C" CONNECTED TO
0	0	0
1	1	1
2	2	2
3	3	3
4	4	4
5	5	5
6	6	6
7	7	7
8	8	8
9	9	9

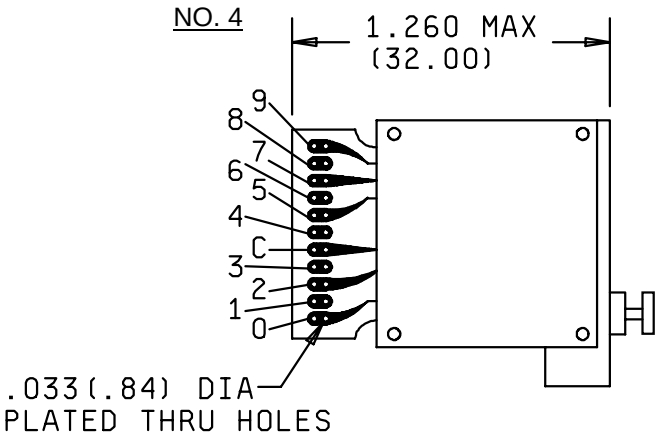

DIAL READS	DIAL POS	COMMON "x" CONNECTED TO		
		1	2	4
0	0			
1	1	•		
2	2		•	
3	3	•	•	
4	4			•
5	5	•		•
6	6		•	•
7	7	•	•	•

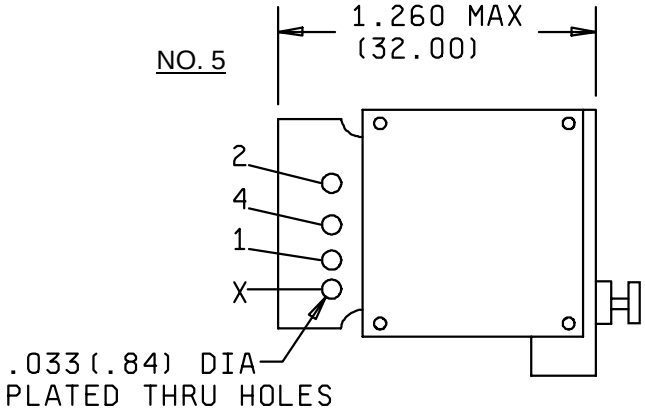

FIGURE 3. Terminal design and circuit configuration - Continued.

DIAL READS	DIAL POS	COMMON "C" CONNECTED TO			COMMON "C" CONNECTED TO		
		1	2	4	1	2	4
0	0				•	•	•
1	1	•				•	•
2	2		•		•		•
3	3	•	•				•
4	4			•	•	•	
5	5	•		•		•	
6	6		•	•	•		
7	7	•	•	•			

NO. 6

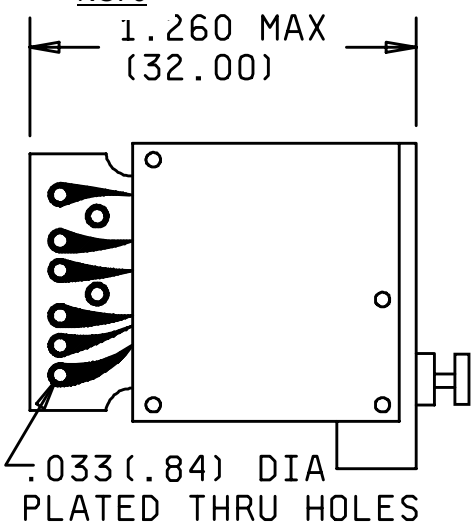

NO. 7

DIAL READS	DIAL POS	COMMON "X" (•) "Y" (o) CONNECTED TO		
		1	2	4
0	0	o	o	o
1	1	•	o	o
2	2	o	•	o
3	3	•	•	o
4	4	o	o	•
5	5	•	o	•
6	6	o	•	•
7	7	•	•	•

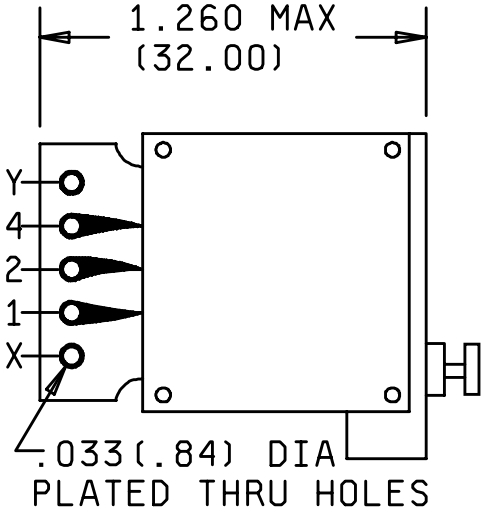

FIGURE 3. Terminal design and circuit configuration - Continued.

DIAL READS	DIAL POS	COMMON "C" CONNECTED TO			
		1	2	4	8
0	0				
1	1	•			
2	2		•		
3	3	•	•		
4	4			•	
5	5	•		•	
6	6		•	•	
7	7	•	•	•	
8	8				•
9	9	•			•

NO. 8

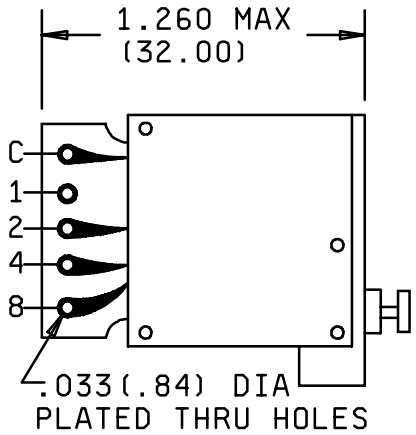

DIAL READS	DIAL POS	COMMON "C" CONNECTED TO								
		1	2	4	8		1	2	4	8
0	0						•	•	•	•
1	1	•					_	_ •	_ •	_ •
2	2		•				•		•	•
3	3	•	•						•	•
4	4			•			•	•		•
5	5	•		•				•		•
6	6		•	•			•			•
7	7	•	•	•						•
8	8				•		•	•	•	
9	9	•			•			•	•	

NO. 9

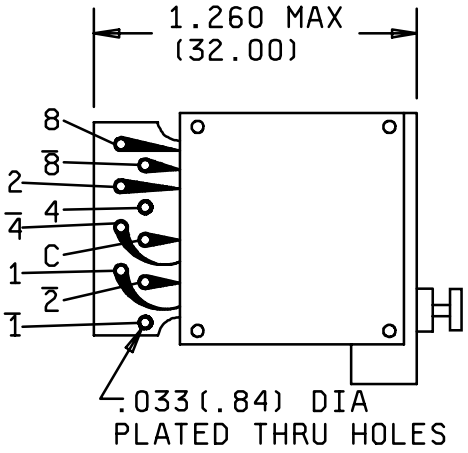

FIGURE 3. Terminal design and circuit configuration - Continued.

		COMMON "X" (•) "Y" (o) CONNECTED TO			
		1	2	4	8
0	0	o	o	o	o
1	1	•	o	o	o
2	2		•	o	o
3	3	•	•	o	o
4	4	o	o	•	o
5	5	•	o	•	o
6	6	o	•	•	o
7	7	•	•	•	o
8	8	o	o	o	•
9	9	•	o	o	•

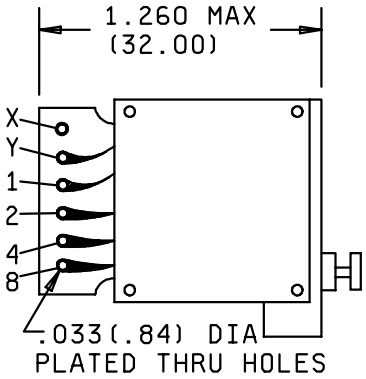

DIAL READS	DIAL POS	COMMON "C" CONNECTED TO			
		0	1	2	4
0	0	•	o	o	o
1	1	o	•	o	o
2	2	o	o	•	o
3	3	o	•	•	o
4	4	o	o	o	•
5	5	o	•	o	•
6	6	o	o	•	•
7	7	o	•	•	•

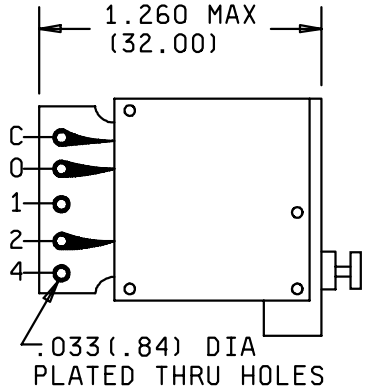

		COMMON "X" (•) "Y" (o) CONNECTED TO				
		1	2	4	8	P
0	0					
1	1	o	o	o	o	•
2	2	•	•	o	o	o
3	3	•	•	o	o	•
4	4	o	o	•	o	o
5	5	•	o	•	o	•
6	6	o	•	•	o	•
7	7	•	•	•	o	o
8	8	o	o	o	•	o
9	9	•	o	o	•	•

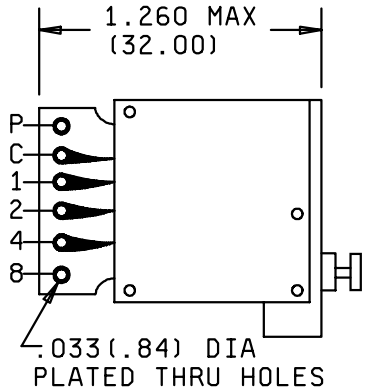

FIGURE 3. Terminal design and circuit configuration - Continued.

DIAL READS	DIAL POS	COMMON "C" CONNECTED TO			
		1	2	4	8
0	0	•	•	o	o
1	1	o	o	•	o
2	2	•	o	•	o
3	3	o	•	•	o
4	4	•	•	•	o
5	5	o	o	o	•
6	6	•	•	o	•
7	7	o	•	o	•
8	8	•	•	o	•
9	9	o	o	•	•

NO. 13

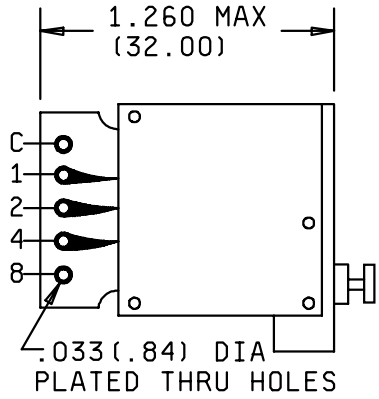

NOTES:
1. Dimensions are in inches.
2. Metric equivalents are I parentheses.
3. Metric equivalents are given for general information only.

FIGURE 3. Terminal design and circuit configuration - Continued.

REQUIREMENTS

Dimensions and configuration: See figures 1, 2 and 3.

Construction: D.

Angle of throw: 36° or 45°.

Temperature-life characteristic: B. For lighted switches, the maximum temperature is 71° C.

Vibration grade: 3 (15g, 10 - 20,000 Hz).

Shock type: M (100g) and H (high-impact). Methods I and II are applicable.

Moisture resistance: Method II of MIL-PRF-22710, except that test condition A, method 103 of MIL-STD-202 shall apply.

Altitude rating: C (0 - 70,000 feet).

Terminal design: See figure 3.

Weight: 0.5 ounce maximum.

Color (readout characters): White on black background.

TABLE I. Electrical test loads.

Test or condition	Resistive	
At atmospheric pressure	0.125 A	28 V dc and ac, 60 Hz
At reduced barometric pressure	0.125 A	28 V dc and ac, 60 Hz
Life (low level)	0.10 mA	30 mV

Luminace Applies only to illuminated switches (see table III).

TABLE II Photometric brightnesss.

Lamp	Switch filter	Brightness	Rating	
			Volts	Ampere
M6363/6 or equivalent	Clear	2.0 ± 1.0 foot-lamberts	5	0.115
	Red	1.0 ± 0.5 foot-lamberts	5	0.115

Operating force (push force required to advance from one detented position to the next):

30 ounces, minimum 60 ounces maximum.

Seal: Method II, or method I and method II, as applicable (see table III).

Dielectric withstanding voltage:

750 volts rms at atmospheric pressure.
250volts rms at reduced barometric pressure, test condition C.

Sand and dust: See table III.

Explosion: Applicable.

Acceleration: Applicable.

Life (rotational): Method 206, test condition G, MIL-STD-202 (50,000 cycles - one cycle equals 720° rotation of the indicator wheel which is 16 or 20 depressions of the push button).

EMI/RFI shielding: Applicable when specified. See table III.

Military part number: See table III.

TABLE III. Part numbers and characteristics.

Part number M22710/17-	Terminal design and circuit configuration	Seal Method 1/	Illumination	Sand and dust	EMI/RFI shielding required
001	1	II	None	Not applicable	No
002	1	II	Red	Not applicable	No
003	1	II	White	Not applicable	No
004	1	I and II	None	Applicable	No
005	1	I and II	Red	Applicable	No
006	1	I and II	White	Applicable	No
007	2	II	None	Not applicable	No
008	2	II	Red	Not applicable	No
009	2	II	White	Not applicable	No
010	2	I and II	None	Applicable	No
011	2	I and II	Red	Applicable	No
012	2	I and II	White	Applicable	No
013	3	II	None	Not applicable	No
014	3	II	Red	Not applicable	No
015	3	II	White	Not applicable	No
016	3	I and II	None	Applicable	No
017	3	I and II	Red	Applicable	No
018	3	I and II	White	Applicable	No
019	4	II	None	Not applicable	No
020	4	II	Red	Not applicable	No
021	4	II	White	Not applicable	No
022	4	I and II	None	Applicable	No
023	4	I and II	Red	Applicable	No
024	4	I and II	White	Applicable	No
025	5	II	None	Not applicable	No
026	5	II	Red	Not applicable	No
027	5	II	White	Not applicable	No
028	5	I and II	None	Applicable	No
029	5	I and II	Red	Applicable	No
030	5	I and II	White	Applicable	No
031	6	II	None	Not applicable	No
032	6	II	Red	Not applicable	No
033	6	II	White	Not applicable	No
034	6	I and II	None	Applicable	No
035	6	I and II	Red	Applicable	No
036	6	I and II	White	Applicable	No
037	7	II	None	Not applicable	No
038	7	II	Red	Not applicable	No
039	7	II	White	Not applicable	No
040	7	I and II	None	Applicable	No
041	7	I and II	Red	Applicable	No
042	7	I and II	White	Applicable	No
043	8	II	None	Not applicable	No
044	8	II	Red	Not applicable	No
045	8	II	White	Not applicable	No
046	8	I and II	None	Applicable	No
047	8	I and II	Red	Applicable	No
048	8	I and II	White	Applicable	No
049	9	II	None	Not applicable	No
050	9	II	Red	Not applicable	No

TABLE III. Part numbers and characteristics - Continued.

Part number M22710/17-	Terminal design and circuit configuration	Seal Method 1/	Illumination	Sand and dust	EMI/RFI shielding required
051	9	II	White	Not applicable	No
052	9	I and II	None	Applicable	No
053	9	I and II	Red	Applicable	No
054	9	I and II	White	Applicable	No
055	10	II	None	Not applicable	No
056	10	II	Red	Not applicable	No
057	10	II	White	Not applicable	No
058	10	I and II	None	Applicable	No
059	10	I and II	Red	Applicable	No
060	10	I and II	White	Applicable	No
061	11	II	None	Not applicable	No
062	11	II	Red	Not applicable	No
063	11	II	White	Not applicable	No
064	11	I and II	None	Applicable	No
065	11	I and II	Red	Applicable	No
066	11	I and II	White	Applicable	No
067	12	II	None	Not applicable	No
068	12	II	Red	Not applicable	No
069	12	II	White	Not applicable	No
070	12	I and II	None	Applicable	No
071	12	I and II	Red	Applicable	No
072	12	I and II	White	Applicable	No
073	13	II	None	Not applicable	No
074	13	II	Red	Not applicable	No
075	13	II	White	Not applicable	No
076	13	I and II	None	Applicable	No
077	13	I and II	Red	Applicable	No
078	13	I and II	White	Applicable	No
1001	1	II	None	Not applicable	Yes
1002	1	II	Red	Not applicable	Yes
1003	1	II	White	Not applicable	Yes
1004	1	I and II	None	Applicable	Yes
1005	1	I and II	Red	Applicable	Yes
1006	1	I and II	White	Applicable	Yes
1007	2	II	None	Not applicable	Yes
1008	2	II	Red	Not applicable	Yes
1009	2	II	White	Not applicable	Yes
1010	2	I and II	None	Applicable	Yes
1011	2	I and II	Red	Applicable	Yes
1012	2	I and II	White	Applicable	Yes
1013	3	II	None	Not applicable	Yes
1014	3	II	Red	Not applicable	Yes
1015	3	II	White	Not applicable	Yes
1016	3	I and II	None	Applicable	Yes
1017	3	I and II	Red	Applicable	Yes
1018	3	I and II	White	Applicable	Yes
1019	4	II	None	Not applicable	Yes
1020	4	II	Red	Not applicable	Yes
1021	4	II	White	Not applicable	Yes

TABLE III. Part numbers and characteristics - Continued.

Part number M22710/17-	Terminal design and circuit configuration	Seal Method 1/	Illumination	Sand and dust	EMI/RFI shielding required
1022	4	I and II	None	Applicable	Yes
1023	4	I and II	Red	Applicable	Yes
1024	4	I and II	White	Applicable	Yes
1025	5	II	None	Not applicable	Yes
1026	5	II	Red	Not applicable	Yes
1027	5	II	White	Not applicable	Yes
1028	5	I and II	None	Applicable	Yes
1029	5	I and II	Red	Applicable	Yes
1030	5	I and II	White	Applicable	Yes
1031	6	II	None	Not applicable	Yes
1032	6	II	Red	Not applicable	Yes
1033	6	II	White	Not applicable	Yes
1034	6	I and II	None	Applicable	Yes
1035	6	I and II	Red	Applicable	Yes
1036	6	I and II	White	Applicable	Yes
1037	7	II	None	Not applicable	Yes
1038	7	II	Red	Not applicable	Yes
1039	7	II	White	Not applicable	Yes
1040	7	I and II	None	Applicable	Yes
1041	7	I and II	Red	Applicable	Yes
1042	7	I and II	White	Applicable	Yes
1043	8	II	None	Not applicable	Yes
1044	8	II	Red	Not applicable	Yes
1045	8	II	White	Not applicable	Yes
1046	8	I and II	None	Applicable	Yes
1047	8	I and II	Red	Applicable	Yes
1048	8	I and II	White	Applicable	Yes
1049	9	II	None	Not applicable	Yes
1050	9	II	Red	Not applicable	Yes
1051	9	II	White	Not applicable	Yes
1052	9	I and II	None	Applicable	Yes
1053	9	I and II	Red	Applicable	Yes
1054	9	I and II	White	Applicable	Yes
1055	10	II	None	Not applicable	Yes
1056	10	II	Red	Not applicable	Yes
1057	10	II	White	Not applicable	Yes
1058	10	I and II	None	Applicable	Yes
1059	10	I and II	Red	Applicable	Yes
1060	10	I and II	White	Applicable	Yes
1061	11	II	None	Not applicable	Yes
1062	11	II	Red	Not applicable	Yes
1063	11	II	White	Not applicable	Yes
1064	11	I and II	None	Applicable	Yes
1065	11	I and II	Red	Applicable	Yes
1066	11	I and II	White	Applicable	Yes
1067	12	II	None	Not applicable	Yes
1068	12	II	Red	Not applicable	Yes
1069	12	II	White	Not applicable	Yes
1070	12	I and II	White	Applicable	Yes

TABLE III. Part numbers and characteristics - Continued.

Part number M22710/17-	Terminal design and circuit configuration	Seal Method 1/	Illumination	Sand and dust	EMI/RFI shielding required
1071	12	I and II	Red	Applicable	Yes
1072	12	I and II	White	Applicable	Yes
1073	13	II	None	Not applicable	Yes
1074	13	II	Red	Not applicable	Yes
1075	13	II	White	Not applicable	Yes
1076	13	I and II	None	Applicable	Yes
1077	13	I and II	Red	Applicable	Yes
1078	13	I and II	White	Applicable	Yes

1/ Seal method II provides a sealed panel.
Seal method I and II provides both a sealed panel and a sealed switch.

Custodians:
Army - CR
Navy- EC
Air Force - 11
DLA - CC

Review activities:
Army - AR, CR4, MI
Navy - AS, MC
Air Force - 99

Preparing activity:
DLA - CC

(Project 5930-1724-05)