INCH-POUND
MIL-PRF-22710H
15 April 2013
SUPERSEDING
MIL-PRF-22710G
13 January 2005

PERFORMANCE SPECIFICATION

# SWITCHES, CODE INDICATING WHEEL (PRINTED CIRCUIT), THUMBWHEEL AND PUSH-BUTTON, GENERAL SPECIFICATION FOR

This specification is approved for use by all Departments and Agencies of the Department of Defense.

## 1. SCOPE

1.1 Scope. This specification covers the general requirements for illuminated and non-illuminated, thumbwheel (see 6.4.1), and push-button, printed circuit rotary switches having unsealed and sealed modules and the associated hardware. These switches are designed for low power alternating current (ac) and direct current (dc) switching applications for use in electronic and communication equipment. Procurement of switches and mounting hardware will require additional data, giving detailed electrical and mechanical requirements, tolerances, and applicable additions and exceptions to the general requirements and tests specified herein (see 6.2).

1.2 Classification.

1.2.1 Part or Identifying Number (PIN). The PIN (when applicable) consists of the letter "M", the basic number of the specification sheet, and an assigned dash number (see 3.1), as shown in the following:

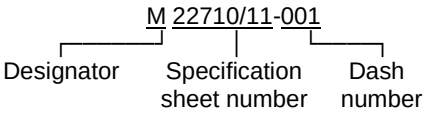


1.2.2 Type designation. The type designation does not fully describe an individual printed circuit rotary switch. The type designation should be of the following form and as specified (see 3.1 and 6.2).

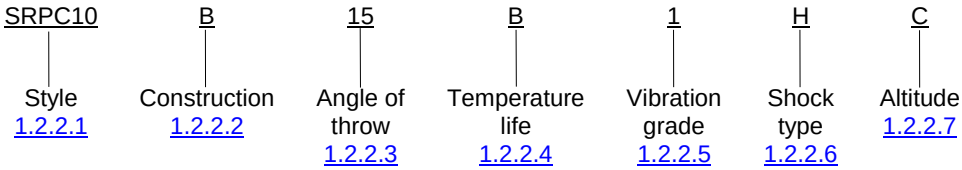


1.2.2.1 Style. The style is identified by the four-letter symbol "SRPC" followed by a two-digit number. The letters identify low-current capacity printed circuit switches. The number identifies the design, indicating the basic physical, mechanical, and electrical characteristics of the switch.

Comments, suggestions or questions on this document should be addressed to Defense Supply Center Columbus, ATTN: VAT, Post Office Box 3990, Columbus, OH 43218-3990, or emailed to switch@dla.mil. Since contact information can change, you may want to verify the currency of this address information using the ASSIST Online database at https://assist.dla.mil.

1.2.2.2 Construction. The construction of the switch is identified by a single letter as specified in the applicable specification sheet (see 3.1) in accordance with table I.

TABLE I. Switch construction.

| Symbol | Construction |
|---|---|
| A | The switch module (see 6.4.2) should be removable and replaceable from the front of the panel without requiring the use of special tools or access to the rear of the panel, or without disturbing any of the other switch modules, and should provide a connector-type termination to allow removal of the module without unsoldering or disturbing any wires. Removal of a switch assembly escutcheon plate prior to removal of the module is allowable. |
| B | The switch module should be replaceable without requiring the use of special tools after the switch assembly is removed from the panel. The switch module must remain complete and self-contained and provide a connector-type termination to allow removal of the module without unsoldering or disturbing any wires. |
| C | For externally operated shaft or remotely driven units. Wafers should be removable and replaceable without unsoldering any wires and should be capable of being individually installed or removed from the switch assembly without removal of or disturbing any other switch wafers that comprise the switch assembly. A design of the switch assembly will be unacceptable if it in any manner utilizes bolts for holding the wafers in the switch assembly or wafer replacement requires the removal of any springs, detents, or subassemblies. |
| D | Switch sections (see 6.4.3) or modules that require a major disassembly or unsoldering in order to be replaced. |

1.2.2.3 Angle of throw (see 6.5). The angle of throw is identified by a two-digit number as specified on the applicable specification sheet (see 3.1). For angles of throw that are fractions of a degree, the closest, lower, whole number should be used.

1.2.2.4 Temperature-life characteristic. The temperature-life characteristic is identified by a single letter as specified on the applicable specification sheet (see 3.1), indicating the temperature range and electrical rotational life of the switch in accordance with table II.

TABLE II. Temperature-life characteristic.

| Symbol | Life (rotational) cycles | Temperature range (°C) | |
|---|---|---|---|
| | | Minimum | Maximum |
| A | 25,000 | -65 | +125 |
| B | 50,000 | -65 | +85 |
| C | 100,000 | -65 | +85 |
| D | 50,000 | -65 | +125 |

1.2.2.5 Vibration grade. The vibration grade is identified by a single digit as specified on the applicable specification sheet (see 3.1), in accordance with table III.

TABLE III. Vibration grade.

| Symbol | Frequency range (Hz) |
|---|---|
| 1 | 10 to 55 |
| 2 | 10 to 500 |
| 3 | 10 to 2,000 |

1.2.2.6 Shock type. The shock type is identified by a single letter as specified on the applicable specification (see 3.1), in accordance with table IV.

TABLE IV. Shock type.

| Symbol | Type of shock |
|---|---|
| H | High impact |
| M | Medium impact (specified pulse), 100 G, sawtooth |

1.2.2.7 Altitude. The altitude rating of the switch is identified by a single letter as specified on the applicable specification sheet (see 3.1), in accordance with table V.

TABLE V. Altitude.

| Symbol | Altitude (feet) | Pressure (inches of Hg.) |
|---|---|---|
| O | Up to 10,000 | |
| B | 50,000 | 3.34 |
| C | 70,000 | 1.31 |
| D | 100,000 | 0.315 |

## 2. APPLICABLE DOCUMENTS

2.1 General. The documents listed in this section are specified in sections 3 and 4 of this specification. This section does not include documents cited in other sections of this specification or recommended for additional information or as examples. While every effort has been made to ensure the completeness of this list, document users are cautioned that they must meet all specified requirements documents cited in sections 3 and 4 of this specification, whether or not they are listed.

2.2 Government documents.

2.2.1 Specifications, standards, and handbooks. The following specifications, standards, and handbooks form a part of this document to the extent specified herein. Unless otherwise specified, the issues of these documents are those cited in the solicitation or contract (see 6.2).

FEDERAL STANDARDS

FED-STD-595/37038 - Colors, Use In Government Procurement.
FED-STD-H28 - Screw Thread Standards for Federal Services.

DEPARTMENT OF DEFENSE SPECIFICATIONS

MIL-DTL-7788 - Panels, Information, Integrally Illuminated.

(See supplement 1 for list of specification sheets.)

DEPARTMENT OF DEFENSE STANDARDS

MIL-STD-202 - Test Methods Standards Electronic and Electrical Component Parts.
MIL-STD-1285 - Marking of Electrical and Electronic Parts.

(Copies of these documents are available online at https://assist.dla.mil or from the Standardization Document Order Desk, 700 Robbins Avenue, Building 4D, Philadelphia, PA 19111-5094.)

2.3 Non-Government publications. The following documents form a part of this document to the extent specified herein. Unless otherwise specified, the issues of these documents are those cited in the solicitation or contract (see 6.2.)

AEROSPACE INDUSTRIES ASSOCIATION (AIA)

NASM 91528 - Knobs-Control, Plastic (Round, Concentric, Pointer, Spinner, Spinner Slip-Clutch, Bar Tactile, Knob Lock Pointer, Slip-Clutch, and Knob locks)

(Copies of these documents are available online at http://www.aia-aerospace.org/ or from the Aerospace Industries Association (AIA), 1000 Wilson Boulevard, Suite 1700, Arlington, VA 22209-3901, telephone 703.358.1000.)

INTERNATIONAL ORGANIZATION FOR STANDARDS (ISO)

ISO 10012 - Measurement Management Systems - Requirements for Measurement Processes and Measuring Equipment

Copies of these documents are available online at http://www.ansi.org or from the American National Standards Institute (ANSI), 25 West 43rd Street 4th floor, New York, NY 10036, telephone 212.642.4900.)

SAE INTERNATIONAL

SAE-AS18012 - Markings For Aircrew Station Displays Design and Configuration of

(Copies of these documents are available online at http://www.sae.org or from Society of Automotive Engineers, 400 Commonwealth Drive, Warrendale, Pennsylvania, 15096-0001)

UNDERWRITERS LABORATORIES (UL)

UL94 - Tests for Flammability of Plastic Materials for Parts in Devices and Appliances.

(Copies of these documents are available online at http://www.ul.com or from the Underwriters Laboratories, Inc., 333 Pfingsten Road, Northbrook, IL 60062-2002.)

2.4 Order of precedence. Unless otherwise noted herein or in the contract, in the event of a conflict between the text of this document and the references cited herein (except for related associated specifications, specification sheets, and MS sheets), the text of this document takes precedence. Nothing in this document, however, supersedes applicable laws and regulations unless a specific exemption has been obtained.

3. REQUIREMENTS

3.1 Specification sheets. The individual item requirements shall be as specified herein and in accordance with the applicable specification sheet. In the event of any conflict between requirements of this specification and the specification sheet, the latter shall govern.

3.1.1 Switch types. Switches furnished under this specification shall be as defined in 3.1.2 or 3.1.3, respectively.

3.1.2 Switches covered by specification sheets and identified by PINs. Switches which are completely defined by a specification sheet (see 3.1) shall be ordered in accordance with 6.2.1.

3.1.3 Switches covered by specification sheets, but not identified by PINs. For switches not covered by a PIN (see 1.2.1), the type designation (see 1.2.2) should be specified in the complementary documents, such as service drawings or ordering data sheets (see 6.2.2). Such switches should be procured from sources listed on the Qualified Products List (QPL) for the applicable style.

3.2 Qualification. Switches identified by PINs or type designation furnished under this specification and covered by specification sheets shall be products which are qualified for listing on the applicable QPL at the time set for opening of bids (see 4.3 and 6.3). The variations allowed from the specification sheet, included in 6.2.2, are as follows, and shall be within the physical, functional, and environmental parameters of the specification sheet:

a. Indicator wheel color.

b. Indicator wheel marking.

c. Letters.

d. Spacers between switch stations.

e. Terminations.

f. Actuator color.

g. EMI/RFI.

h. Stops.

i. Circuit configurations (within the number of positions shown).

3.3 Material. The material shall be as specified herein. However, when a definite material is not specified, a material will be used which will enable the switches to meet the performance requirements of this specification. Acceptance or approval of any constituent material shall not be construed as a guaranty of the acceptance of the finished product.

3.3.1 Insulation. Materials for insulation shall be used which shall enable the switch to meet the performance requirements of this specification. Plastic materials shall be fungus inert and shall meet flammability requirements of 94V-0 in accordance with UL94. Thermoplastic materials shall also meet the following requirements:

a. Minimum heat deflection temperature of 375°F.

b. Maximum water absorption of 0.30 percent.

c. Maximum dimensional stability (high temperature) of 0.12 percent.

3.3.1.1 Printed circuit board. Printed circuit boards shall be designed to enable the switch to meet the performance requirements of this specification. When a conformal coating is specified it shall meet the requirements of this performance document. Additional information and guidance on printed circuit boards and conformal coating is provided in 6.7.

3.3.2 Metals. All metal parts, other than current-carrying parts, shall be of corrosion-resistant material or suitably protected to resist corrosion.

3.3.2.1 Ferrous materials. Ferrous material shall not be used for current-carrying parts.

3.3.2.2 Dissimilar metals. When dissimilar metals are used in intimate contact with each other, protection against electrolysis and corrosion shall be provided. The use of dissimilar metals in contact, which tend toward active electrolytic corrosion (particularly brass, copper, or steel used in contact with aluminum or aluminum alloy), is not acceptable. However, metal plating or metal spraying of dissimilar base metals to provide similar or suitable abutting surfaces is permitted. The use of dissimilar metals separated by a suitable insulating material is also permitted. For additional information and guidance on dissimilar metals see 6.8.

3.3.2.3 Pure tin. The use of pure tin, as an underplate or final finish, is prohibited both internally and externally. Tin content of switch components and solder shall not exceed 97 percent, by mass. Tin shall be alloyed with a minimum of 3 percent lead, by mass (see 6.15).

3.3.3 Protective coatings and finishes. That portion of the switch assembly which is visible from the front of the panel shall have a black matte or lusterless finish in accordance with FED-STD-595, No. 37038.

3.3.4 Solder. Solder shall not be used for mechanical strength and shall be selected to enable the switch to meet the performance requirements of this specification.

3.3.5 Potting compounds. Potting compounds, when used, shall be selected to enable the switch to meet performance requirements of this specification. Additional information and guidance on potting compounds is provided in 6.9.

3.4 Interface and dimensions. Switches shall be so constructed as to ensure proper operation when mounted in any position. The switches shall meet the interface and dimensions specified (see 3.1).

3.4.1 Threaded parts. All threaded parts shall be in accordance with FED-STD-H28. Wherever possible, unified screw threads shall be used.

3.4.1.1 Engagement of threaded parts. All threaded parts shall engage at least three full threads in soft metals like aluminum and its alloys. A minimum of two full threads shall be used in harder materials such as brass or steel. When a screw mates with a plastic part, a threaded metal insert shall be molded therein to receive the screw. Drive screws used directly in plastic parts are acceptable only when retention is assured by subsequent module assembly secured by metal threaded fasteners.

3.4.1.2 Locking of screw-thread assemblies. Bronze or corrosion-resistant steel flat washers shall be provided under nuts or screw heads, except where a double-chamfered nut is used in contact with plastic, a flat washer is not required. Nuts, other than lock nuts, shall have a locking sealant applied to the threads of the screw or stud and the nut. For additional information on locking sealant see 6.11.

3.4.1.3 Mounting. Method of mounting shall be as specified (see 3.1 and 6.2).

3.4.2 Stops. Stops, when required, shall be permanently fixed and their position specified (see 6.2).

3.4.3 Terminals. Terminals shall be of the design specified (see 3.1 and 6.2).

3.4.3.1 Connector terminals. The leading edge of the printed circuit board conductor shall be tapered and shall not extend to the edge of the printed circuit board. The mating area for this type of wafer design shall be treated to facilitate connection. Gold plating may be used and shall be over a low stress nickel plate. For additional information and guidance see 6.10.

3.4.3.2 Solder terminals. Terminals shall accommodate two AWG size 22 stranded wires. Terminals which are integral with the printed circuit shall be mechanically bonded to the board prior to fusion to the board.

3.4.3.3 Printed circuit board terminals. Terminals shall accommodate two AWG size 22 stranded wires. The walls of plated-through holes may be copper and overplated with the thickness to be not less than .001 inch (0.0254 mm).

3.4.4 Indexing. Unless otherwise specified (see 6.2.2), switches shall have a positive detent or indexing mechanism locating each position. The detent or indexing mechanism shall be designed to minimize the possibility of movable element or elements coming to rest between indexing positions. When indexing is accomplished by means of a push button or toggle, 100-percent indexing of the movable element or elements and character shall be attained at, or before, the push button is fully depressed. Glass or other fragile materials shall not be used in detent or indexing mechanisms.

3.4.5 Switch contacts.

3.4.5.1 Rotor contacts. The rotor contact shall require no adjustments during any of the tests specified herein. The rotor contact assembly shall be adequately staked or anchored to the rotor insulator to preclude any axial, radial, or longitudinal movement during the life of the switch. The rotor contact interface with the switch stator may be of a gold, gold alloy, platinum alloy material or gold plated. For additional information and guidance see 6.10.

3.4.5.2 Stator contacts. The conductive pattern of the wafer stator shall be fabricated with a printed wiring pattern (circuit configuration). The minimum conductor or pad width shall be .025 inch (0.6350 mm), unless otherwise specified (see 3.1 and 6.2). The contact portion of the printed conductor, which makes contact with the rotor blade, may be rhodium-plated or gold-plated. The portion of the conductor where the terminals are staked to the printed circuit board shall not be rhodium-plated. When the terminal portion of the printed circuit board is used as the male connector, the leading edge of the connector shall be tapered and shall not extend to the edge of the printed circuit board. For additional information and guidance on plating see 6.10.

3.4.5.3 Contact alignment. Positive contact shall be made in all switch positions by contact engagement through the longitudinal centerline of the stationary contacts in a plane normal to the switch module, stacked switch module (see 6.4.5), or section.

3.4.6 Connectors. When specified (see 3.1 and 6.2), the printed circuit board shall be capable of mating with applicable specification connectors (see 3.1).

3.4.6.1 Connector mating. Connector mating and unmating shall be accomplished without the use of special tools.

3.4.6.2 Connector retention. When connectors are furnished as part of the switch, the connectors shall be secured to minimize any noise caused by physical movement of the connectors in the retaining tracks.

3.4.7 Lamp circuitry and illumination (when applicable, see 3.1 and 6.2).

3.4.7.1 Indicator ring. The indicator ring design shall permit the application of legends as applicable (see 3.1 and 6.2). The ring shall provide a black background with white markings, unless otherwise specified (see 3.1 and 6.2). The contrast between the indicator ring markings and indicator ring background shall be nine minimum for switches with a black background, and three minimum for switches with a gray background. Contrast shall be calculated in accordance with the applicable requirements of MIL-DTL-7788, using the following formula:

$$\text{Contrast} = \frac{\text{(brightness of marking) - brightness of background}}{\text{brightness of background}}$$

The approximate ratio of character height to width of line shall be 8 to 1. For illuminated switches, the color for the background or marking, as applicable, shall be provided by the use of a suitable color filter covering the lamp.

3.4.7.2 Lamp circuitry. Lamp circuits, when specified (see 3.1 and 6.2), shall be independent of the switching circuits and shall be electrically isolated from the switch housing.

3.4.7.3 Lamp type. Illuminated switches shall use the lamp specified (see 3.1 and 6.2) for the illumination of the indicator ring. For direct Government orders, lamps shall be assembled in the switch. Lamps may be omitted when specified (see 3.1). Lamp failure shall not be considered a unit failure if, when the lamp failure is noted, a new lamp is immediately installed and the lamp functions. Tests shall then be continued as required. However, lamp failure for a nonreplaceable item (see 3.1) shall be considered a unit failure.

3.4.7.4 Lamp replacement. Lamp removal and replacement shall be accomplished without the use of special tools.

3.4.7.5 Lamp contacts and retention springs. Lamp contacts and retention springs shall be suitably treated to ensure conformance with established requirements.

3.4.7.6 Color. The color projected by the indicator ring for "clear" illuminated units shall meet the brightness requirements (see 3.1). In those switches where red or white illumination is specified, red is any color for which y is not greater than 0.335, and z is not greater than 0.002, in accordance with the coordinate system of the International Commission on Illumination (C.I.E.).

The light transmitted through the white markings of the panel shall be provided by utilizing a clear, colorless filter with a luminous transmittance of 0.90 (at 2365K) or no filters over the lamps or in the light assembly.

3.5 Contact resistance. Unless otherwise specified (see 3.1), when measured as specified in 4.5.2, the initial contact resistance shall be not greater than 100 milliohms. Following moisture resistance test, and life (rotational) test at atmospheric pressure, and at reduced barometric pressure (when applicable, unless otherwise specified (see 3.1 and 6.2.2), the value shall not have increased by more than 60 milliohms from the initial contact resistance measurement value. Following the life, low-level switching test, the maximum contact resistance shall not exceed 1 ohm.

3.6 Circuit configuration. When switches are tested as specified in 4.5.3, the switch circuit configuration shall conform to the applicable diagram specified (see 3.1 and 6.2). Switches shall make, carry, and break the required circuits in all positions and in all sections, switch modules, or stacked switch modules.

3.7 Luminance (when applicable, see 3.1 and 6.2). When tested in accordance with 4.5.4, the photometric brightness in foot-lamberts shall be as specified (see 3.1 and 6.2).

3.8 Rotational torque or operating force (as applicable, see 3.1 and 4.5.5).

3.8.1 Rotational torque (applicable to external drive shaft switches. When switches are tested as specified in 4.5.5.1, the torque required to rotate the shaft from each detent position to the next shall be within the specified limits (see 3.1).

3.8.2 Operating force (applicable to switch modules or stacked switch modules). When switches are tested as specified in 4.5.5.2, the tangential force required to rotate the shaft from each detent position to the next shall be within the specified limits (see 3.1).

3.9 Stops (when applicable). When switches with stops are tested as specified in 4.5.6, there shall be no broken, loose, deformed, or displaced parts, nor shall there be any slippage of moving parts.

3.10 Thermal shock. When switches are tested as specified in 4.5.7, there shall be no mechanical or electrical damage, loosening of rivets or other fastening devices.

3.11 Terminal strength (applicable to switches having solder-type terminals, see 3.1 and 4.5.8).

3.11.1 Pull. When switches are tested as specified in 4.5.8.1.1 and 4.5.8.1.2, the terminals shall withstand the specified load without breaking or affecting the switching arrangement.

3.11.2 Bend (when applicable). When switches with terminals bent permanently out of shape are tested as specified in 4.5.8.2, there shall be no breakage of terminals or visible cracks in either the terminals or the insulating material.

3.12 Strength of mounting bushing (when applicable, see 3.1). When switches are tested as specified in 4.5.9, there shall be no damage to the switch, or loosening or twisting of the bushing relative to the switch front plate assembly.

3.13 Vibration. When switches are tested as specified in 4.5.10, any pair of mating contacts shall not open for a period of time longer than 1 microsecond (ms) including bounce before reclosing, unless otherwise specified (see 3.1). There shall be no change in shaft position, or evidence of broken, loose, deformed, or displaced parts.

3.14 Shock (see 4.5.11). When switches are tested as specified in 4.5.11.1, mating contacts shall not open for a period of time longer than 1 millisecond including bounce, unless otherwise specified (see 3.1). When tested as specified in 4.5.11.2, contacts shall not open for a period longer than 5 milliseconds including bounce, unless otherwise specified (see 3.1), before returning to the closed position before the end of the first bounce. There shall be no change in shaft position, or evidence of broken, loose, deformed, or displaced parts.

3.15 Insulation resistance. When measured as specified in 4.5.12, the insulation resistance shall be greater than 1,000 megohms, unless otherwise specified (see 3.1).

3.16 Lamp retention (when applicable, see 3.1). When switches are tested as specified in 4.5.13, the captive means shall be capable of retaining the lamp retention adapter.

3.17 Seal (when applicable, see 3.1). When switches are tested as specified in 4.5.14, the following requirements shall apply.

3.17.1 Method I (mounting) (see 4.5.14.1). During the seal test, there shall be no evidence of a continuous stream of air bubbles. During the dielectric withstanding voltage test, the leakage current shall not exceed 1.0 milliampere.

3.17.2 Method II (mounting) (see 4.5.14.2). There shall be no evidence of leakage as evidenced by a continuous stream of air bubbles.

3.18 Dielectric withstanding voltage. When switches are tested as specified in 4.5.15, there shall be no arcing, flashover, breakdown of insulation or damage, and the leakage current shall be not greater than 0.5 milliampere.

3.19 Moisture resistance (see 4.5.16). When switches are tested as specified in 4.5.16.1 or 4.5.16.2, the insulation resistance shall be greater than 25 megohms, unless otherwise specified (see 3.1). At the conclusion of the test, there shall be no evidence of measling, corrosion, breaking, cracking, spalling, or loosening of terminals outside the confines of the terminal anchoring device, and mounting hardware shall be readily removable. There shall be no peeling or chipping of the finish.

3.20 EMI/RFI shielding (when specified, see 3.1 and 4.5.17). When switches are tested as specified in 4.5.17.1, the resistance measurement shall not exceed 1 ohm. When switches are tested as specified in 4.5.17.2, the shielding attenuation shall be not less than 60 dB from 200 MHz to 1,000 MHz, unless otherwise specified (see 3.1).

3.21 Acceleration (when applicable, see 3.1). When switches are tested as specified in 4.5.18, there shall be no opening of closed contacts, or closing of open contacts, and there shall be no mechanical or electrical damage.

3.22 Sand and dust (when applicable, see 3.1). When switches are tested as specified in 4.5.19, there shall be no evidence of physical damage, and the switches shall be mechanically and electrically operative at the conclusion of the test. For thumbwheel-operated switches, the torque shall not change in excess of 100 percent of the initial measured value. For push button operated switches, the torque shall not change in excess of 25 percent of the initial measured value.

3.23 Explosion (when applicable, see 3.1). When switches are tested as specified in 4.5.20, there shall be no explosion within the test chamber, whether or not explosion occurs within the switch.

3.24 Salt spray (corrosion). When switches are tested as specified in 4.5.21, there shall be no evidence of excessive corrosion. Excessive corrosion is defined as corrosion which interferes with the electrical or mechanical performance, or, in the case of plated metals, corrosion which has passed through the plating and exposed the base metal. After the test, mounting hardware shall be readily removable.

3.25 Life (rotational). When switches are tested as specified in 4.5.22, they shall be electrically and mechanically operative during and after the test. During the test, there shall be no evidence of intermittent electrical operation. The specified contact-sequential pattern shall be maintained throughout the test. At the conclusion of the test, the average rotational torque or operating force (see 3.8) shall not have changed more than +30 percent from the initial value (see 3.1). After the test, there shall be no evidence of broken, deformed, displaced, or loose parts.

3.25.1 Switch section alignment (applicable to nonshorting switches where more than one switch section is operated by a common shaft, see 3.1). When switches are tested as specified in 4.5.22.1, during the period of monitoring for switch section alignment, the identical circuits, in the first and last sections of the assembly, shall both be open at the same time for some duration while switching from one position to the next.

3.26 Life, low level switching. When switches are tested as specified in 4.5.23, the faults permissible shall not be exceeded (see 3.1 and 6.2.2). After the test, there shall be no evidence of broken, deformed, displaced, or loose parts and the contact resistance, insulation resistance, and dielectric withstanding voltage shall be in accordance with the requirements of 3.5, 3.15, and 3.18, respectively.

3.27 Solderability. When switches or printed circuit boards are tested as specified in 4.5.24, 95 percent of the total length of the fillet, which is between the standard wrap wire and the terminal, shall be tangent to the surface of the terminal being tested and shall be free from pinholes, voids, etc. However, a ragged or interrupted line at the point of tangency between the fillet and the terminal under test shall be considered a defect. After the test, there shall be no evidence of fracture, loosening of parts, or any other mechanical failure of the switches or printed circuit boards.

3.28 Marking. Switches shall be marked in accordance with MIL-STD-1285 with the following information:

a. PIN, when applicable, or type designation with manufacturer's PIN.

b. Switch manufacturer's name, trademark, or code symbol, and date code.

c. When 3.28a is not applicable, the manufacturer's PIN, the Government drawing number, or prime contractor's number shall be marked on the unit package.

d. Terminal identification (see 3.1).

3.28.1 Indicator ring. Unless otherwise specified, the marking of the applicable legend shall be in accordance with SAE-AS18012 (see 3.1 and 6.2.2).

3.29 Recycled, recovered, or environmentally preferable materials. Recycled, recovered, or environmentally preferable materials shall be used to the maximum extent possible provided that the material meets or exceeds the operational and maintenance requirements, and promotes economically advantageous life cycle costs.

3.30 Workmanship. Switches shall be processed in such a manner as to be uniform in quality and shall be free from cracked or displaced parts and other defects that will affect life, serviceability, or appearance. All molded or laminated parts shall be free of chips, blemishes, or flakes which are detrimental to the operating functions of the switch. Gate marks shall not be considered a defect.

4. VERIFICATION

4.1 Classification of inspection. The inspections specified herein are classified as follows:

a. Qualification inspection (see 4.3).

b. Conformance inspection (see 4.4).

4.1.1 Test equipment and inspection facilities. Test and measuring equipment and inspection facilities of sufficient accuracy, quality, and quantity to permit performance of the required inspection shall be established and maintained by the contractor. The establishment and maintenance of a calibration system to control the accuracy of the measuring and test equipment shall be in accordance with ISO-10012, or equivalent system as approved by the qualifying activity.

4.2 Inspection conditions. Unless otherwise specified herein, all inspections shall be performed in accordance with the test conditions specified in the "GENERAL REQUIREMENTS" of MIL-STD-202.

4.3 Qualification inspection. Qualification inspection shall be performed at a laboratory acceptable to the Government (see 6.3), on sample units produced with equipment and procedures normally used in production.

4.3.1 Sample size. The number of switches to be subjected to qualification inspection shall be as specified in table VI. Additional samples of the printed circuit board may be submitted for the solderability test.

4.3.2 Inspection routine. The sample shall be subjected to the inspections specified in table VI, in the order shown. All sample units shall be subjected to the inspections of group I. The samples shall then be divided as specified in table VI and subjected to the inspection for their particular group.

4.3.3 Failures. One or more failures shall be cause for refusal to grant qualification approval. Lamp failure shall not be considered a unit failure, if when the lamp failure is noted, a new lamp is immediately installed and the lamp functions. Test shall then be continued as required. However, lamp failure for a nonreplaceable item (see 3.1) shall be considered a unit failure.

4.3.4 Verification of qualification. Every 12 months, the manufacturer shall provide verification of qualification to the qualifying activity. Continuation is based on meeting the following requirements:

a. Design of switch has not been modified, (every 12 months).

b. Verification of group A lot acceptance, (every 12 months).

c. Periodic group B inspection, (every 36 months).

4.4 Conformance inspection. Inspection of product for delivery shall consist of group A and group B inspection.

4.4.1 Inspection lot. An inspection lot shall consist of all the switches of the same style produced under essentially the same conditions, and offered for inspection at one time. Similar switches meeting these requirements, but having different circuit configurations and numbers of switch sections, may be combined to form an inspection lot if the inspection is performed to the most severe conditions existing in the lot.

4.4.2 Group A inspection. Group A inspection shall consist of the inspections specified in table VII, in the order shown.

4.4.2.1 Sampling plan. Statistical sampling shall be in accordance with table VII and table VIII. Separate, randomly selected, group(s) of samples are required for subgroup 1 and subgroup 2. For acceptance of the lot there shall be zero occurrences of defects.

4.4.2.1.1 Subgroup 1. A sample of parts shall be randomly selected in accordance with table VIII, subgroup 1 sampling plan.

4.4.2.1.2 Subgroup 2. A sample of parts shall be randomly selected in accordance with table VIII, subgroup 2 sampling plan.

4.4.2.2 Rejected lots. If an inspection lot is rejected, the lot shall be 100 percent inspected for the defects noted. The contractor may correct all of the defects or remove all of the defective units from the lot. The lot shall then be sampled again in accordance with table VII and table VIII. For acceptance, there shall be zero occurrences of defects. Such lots shall be separate from new lots and shall be clearly identified as reinspected lots. If there are one or more defects in this second sample for the same characteristic that caused the original lot rejection, the lot is rejected.

4.4.3 Group B inspection. Group B inspection shall consist of the inspections specified in table IX, in the order shown, and the sample shall be selected from inspection lots that have passed group A inspection.

4.4.3.1 Sampling plan. Samples shall be randomly selected in accordance with table VIII, subgroup 1 sampling plan. The sample size shall be based on the inspection lot size from which the sample was selected for group A inspection. For acceptance of the lot there shall be zero occurrences of defects.

4.4.3.2 Rejected lots. If an inspection lot is rejected, the lot shall be 100 percent inspected for the defects noted. The contractor may correct all of the defects or remove all of the defective units from the lot. The lot shall then be sampled again in accordance with table IX. For acceptance, there shall be zero occurrences of defects. Such lots shall be separate from new lots and shall be clearly identified as reinspected lots. If there are one or more defects in this second sample for the same characteristic that caused the original lot rejection, the lot is rejected.

4.4.3.3 Disposition of sample units. Sample units which have been subjected to group B inspection shall not be delivered on the contract or order, but shall be kept on hand until the next inspection period for submittal to the qualifying activity if so requested.

4.4.4 Periodic inspection. Periodic inspection shall consist of group C. Except where the results of these inspections show noncompliance with the applicable requirements (see 4.4.4.1.4), delivery of products which have passed group A and group B inspections shall not be delayed pending the results of these periodic inspections.

4.4.4.1 Group C inspection. Group C inspection shall consist of the inspections specified in table X, in the order shown, for each subgroup. Group C inspection shall be made on sample units selected from inspection lots which have passed the group B inspection, unless the Government considers it more practical to select a sample from current production for group C inspection.

4.4.4.1.1 Sampling plan. Sixteen sample units for each style shall be subdivided and tested as specified for each subgroup in table X. Group C inspections shall be completed in accordance with table X within 36 months after the date of notification of qualification and within each subsequent 36 month period. When production of a particular style of switch has been suspended for 36 months, the qualifying activity shall be notified. During each inspection period, if more than one style has been produced covering a number of performance levels, and if inspection is performed on sample units with the highest performance level produced during that period, then group C inspection can be omitted for the styles with lower performance levels.

4.4.4.1.1.1 Group C suspension. At the request of the manufacturer, group C testing may be suspended with the qualifying activity's approval if it can be demonstrated that these test have been performed three consecutive times with zero failures. If the design, material, construction, or processing is changed or if there are any quality problems or failures, or at their discretion the qualifying activity may require resumption of the original testing requirement. Suspension of testing does not relieve the manufacturer from meeting the Group C test requirements.

4.4.4.1.2 Failures. If one or more sample units fail to pass group C inspection, the sample shall be considered to have failed.

4.4.4.1.3 Disposition of sample units. Sample units which have been subjected to group C inspections shall not be delivered on the contract but shall be submitted to the qualifying activity.

TABLE VI. Qualification inspection.

| Inspection | Requirement paragraph | Method paragraph |
|---|---|---|
| Group I (all sample units - 18 total) | | |
| Visual and mechanical inspection (2 sample units for interface and dimensions) | 3.1, 3.3, 3.4, 3.28, and 3.30 | 4.5.1 |
| Contact resistance | 3.5 | 4.5.2 |
| Circuit configuration | 3.6 | 4.5.3 |
| Luminance (when applicable) | 3.7 | 4.5.4.2 |
| Indicator ring (when applicable) | 3.4.7.1 | 4.5.4.1 |
| Color | 3.4.7.6 | 4.5.4.3 |
| Rotational torque or operating force (as applicable) | 3.8 | 4.5.5 |
| Stops (when applicable) | 3.9 | 4.5.6 |
| Group II (4 sample units) | | |
| Thermal shock | 3.10 | 4.5.7 |
| Terminal strength (when applicable) | 3.11 | 4.5.8 |
| Strength of mounting bushing (when applicable) | 3.12 | 4.5.9 |
| Vibration | 3.13 | 4.5.10 |
| Shock | 3.14 | 4.5.11 |
| Rotational torque or operating force (as applicable) | 3.8 | 4.5.5 |
| Insulation resistance | 3.15 | 4.5.12 |
| Contact resistance | 3.5 | 4.5.2 |
| Lamp retention (when applicable) | 3.16 | 4.5.13 |
| Seal (when applicable) | 3.17 | 4.5.14 |
| Dielectric withstanding voltage | 3.18 | 4.5.15 |
| Group III (2 sample units) | | |
| Moisture resistance (includes insulation resistance) | 3.19 | 4.5.16 |
| Dielectric withstanding voltage | 3.18 | 4.5.15 |
| Rotational torque or operating force (as applicable) | 3.8 | 4.5.5 |
| Contact resistance | 3.5 | 4.5.2 |
| EMI/RFI shielding (when specified) | 3.20 | 4.5.17.1,4.5.17.2 |
| Group IV (4 sample units) | | |
| Acceleration (when applicable) | 3.21 | 4.5.18 |
| Sand and dust (when applicable) | 3.22 | 4.5.19 |
| Insulation resistance | 3.15 | 4.5.12 |
| Explosion (when applicable) | 3.23 | 4.5.20 |
| Salt spray (corrosion) | 3.24 | 4.5.21 |
| Contact resistance | 3.5 | 4.5.2 |
| Rotational torque or operating force (as applicable) | 3.8 | 4.5.5 |
| Seal (when applicable) | 3.17 | 4.5.14 |
| Dielectric withstanding voltage 1/ | 3.18 | 4.5.15 |
| Group V (6 sample units) | | |
| Life (rotational) 2/ | 3.25 | 4.5.22 |
| At rated ac load (resistive) 2 sample units 3/ | | |
| At rated dc load (resistive) 2 sample units 3/ | | |
| Life, low level switching, 2 sample units | 3.26 | 4.5.23 |
| Rotational torque or operating force (as applicable) | 3.8 | 4.5.5 |
| Contact resistance | 3.5 | 4.5.2 |
| Seal (when applicable) | 3.17 | 4.5.14 |
| Insulation resistance | 3.15 | 4.5.12 |
| Dielectric withstanding voltage | 3.18 | 4.5.15 |
| Group VI (2 sample units) 4/ | | |
| Solderability | 3.27 | 4.5.24 |

1/ Only when seal is applicable.
2/ One additional sample unit to be tested to all other loads specified.
3/ Two additional sample units are applicable when barometric pressure is reduced (see 4.5.22.2).
4/ Additional samples of the printed circuit board may be submitted for the solderability test.

TABLE VII. Group A inspection.

| Inspection | Requirement paragraph | Test method paragraph | Sampling plan |
|---|---|---|---|
| Subgroup 1 | | | |
| Visual and mechanical inspection | 3.1 | 4.5.1 | 1/ See 4.4.2.1.1 |
| Material | 3.3 | 4.5.1 | |
| Interface and dimensions | 3.4 | 4.5.1 | |
| Lamp circuitry and illumination (when applicable) | 3.4.7 | 4.5.1 | |
| Marking | 3.28 | 4.5.1 | |
| Workmanship | 3.30 | 4.5.1 | |
| Subgroup 2 | | | |
| Circuit configuration | 3.6 | 4.5.3 | 2/ See 4.4.2.1.2 |
| Luminance | 3.7 | 4.5.4.2 | |
| Color (when applicable) | 3.4.7.6 | 4.5.4.3 | |
| EMI/RFI shielding (when specified (see 3.1)) | 3.20 | 4.5.17.1 | |

1/ At the option of the contractor, documented in-process inspection may be used to satisfy the materials (see 3.3) and interface and dimensions (see 3.4) requirements provided that all of the contractor's in-process control data on these tests are made available to the Government upon request.

2/ At the option of the contractor, incoming or in-process inspection by photometric measurement of raw materials may be used to meet the color and luminance requirements provided that they meet the acceptance criteria and all of the contractor's in-process control data on these tests and are made available to the Government upon request.

TABLE VIII. Zero defect sampling plan.

| Lot size | Number of switches to be tested 1/ | |
|---|---|---|
| | Subgroup 1 | Subgroup 2 |
| 1 - 4 | All | All |
| 5 - 12 | 5 | All |
| 13 - 50 | 5 | 13 |
| 51 - 90 | 7 | 13 |
| 91 - 150 | 11 | 13 |
| 151 - 280 | 13 | 20 |
| 281 - 500 | 16 | 29 |
| 501 - 1,200 | 19 | 34 |
| 1,201 - 3,200 | 23 | 42 |
| 3,201 - 10,000 | 29 | 50 |
| 10,001 - 35,000 | 35 | 60 |

1/ If the sample size is greater than the lot size, the lot shall be 100 percent inspected.

TABLE IX. Group B inspection.

| Inspection | Requirement paragraph | Test method requirement | Sampling plan |
|---|---|---|---|
| Rotational torque or operational force (as applicable) | 3.8 | 4.5.5 | |
| Stops (when applicable) | 3.9 | 4.5.6 | |
| Seal (when applicable) | 3.17 | 4.5.14 | See 4.4.3.1 |
| Dielectric withstanding voltage 1/ | 3.18 | 4.5.15.1 | |
| Contact resistance | 3.5 | 4.5.2 | |

1/ For sealed switches, use the dielectric withstanding voltage test of 4.5.14 at atmospheric pressure (sea level) only. For unsealed switches, use the dielectric withstanding voltage test of 4.5.15.

4.4.4.1.4 Noncompliance. If a sample fails to pass group C inspection, the contractor shall notify the qualifying activity and the cognizant inspection activity of such failure and take corrective action on the materials or processes, or both, as warranted, and on all units of product which can be corrected and which were manufactured under essentially the same conditions, with essentially the same materials, processes, etc., and which are considered subject to the same failure. Acceptance and shipment of the product shall be discontinued until corrective action, acceptable to the qualifying activity, has been taken. After the corrective action has been taken, group C inspection shall be repeated on additional sample units (all inspection, or the inspection which the original sample failed, at the option of the qualifying activity). Group A and group B inspection may be reinstituted; however, final acceptance and shipment shall be withheld until the group C inspection has shown that the corrective action was successful. In the event of failure after reinspection, information concerning the failure shall be furnished to the cognizant inspection activity and the qualifying activity.

4.5 Methods of inspection.

4.5.1 Visual and mechanical inspection. Switches shall be inspected to verify that the material, interface and dimensions, marking, and workmanship are in accordance with the applicable requirements (see 3.1, 3.3, 3.4, 3.28, and 3.30). Only two of the sample units shall be inspected for compliance to interface and dimensions for qualification.

4.5.2 Contact resistance (see 3.5). Switches shall be tested in accordance with method 307 of MIL-STD-202. The following details and exceptions shall apply:

a. Method of connection: To two different pairs of mating contacts on each switch module or section. Where the switch has undergone a life (rotational) test (see 4.5.22.1 or 4.5.22.2 as applicable), the contacts shall have been subjected to the specified electrical test loads (see 3.1). At least one of the stationary contacts on each section shall have been subjected to the terminal-strength pull test (see 4.5.8.1).

b. Test current: 100 milliamperes.

c. Maximum open-circuit test voltage: 2 volts.

d. Number of activations prior to measurement: One cycle.

e. Number of tests activations: One for each dial position in which the pair of contacts are mated.

f. Number of measurements per activation: One of each pair of mating contacts under test, except that a minimum of four shall be made on each switch when possible.

4.5.3 Circuit configuration (see 3.6 and 3.4.7.2). Switches shall be tested to determine conformance to the applicable diagram using suitable test circuits of an electrical design. The lamp circuit shall be tested electrically.

4.5.4 Illumination (when applicable, see 3.1 and 6.1) (see 3.7).

4.5.4.1 Indicator ring. The luminance of the illumination of the marking and the luminance of the background shall be measured. The relationship between readings shall be in accordance with the applicable requirements of 3.4.7.1.

4.5.4.2 Luminance. A Photo Research photometric brightness meter or equivalent shall be used. At least three readings (top-center-bottom) shall be taken on each of three characters spaced equally (or nearly so) around the dial. The average of all of the readings shall be the brightness and must fall within the limits specified. In addition, no one individual reading shall be more than 25 percent outside of the specified limits.

TABLE X. Group C inspection.

| Inspection | Requirement paragraph | Method paragraph |
|---|---|---|
| Subgroup I (4 sample units) | | |
| Thermal shock | 3.10 | 4.5.7 |
| Vibration | 3.13 | 4.5.10 |
| Shock | 3.14 | 4.5.11 |
| Rotational torque or operating force (as applicable) | 3.8 | 4.5.5 |
| Moisture resistance (includes insulation resistance) | 3.19 | 4.5.16 |
| Contact resistance | 3.5 | 4.5.2 |
| Seal (when applicable) | 3.17 | 4.5.14 |
| Dielectric withstanding voltage | 3.18 | 4.5.15 |
| Subgroup II (4 sample units) | | |
| Terminal strength (when applicable) | 3.11 | 4.5.8 |
| Strength of mounting bushing (when applicable) | 3.12 | 4.5.9 |
| Rotational torque or operating force (as applicable) | 3.8 | 4.5.5 |
| Insulation resistance | 3.15 | 4.5.12 |
| Contact resistance | 3.5 | 4.5.2 |
| Circuit configuration | 3.6 | 4.5.3 |
| Indicator ring | 3.4.7.1 | 4.5.4.1 |
| Seal (when applicable) | 3.17 | 4.5.14 |
| Dielectric withstanding voltage | 3.18 | 4.5.15 |
| Subgroup III (4 sample units) | | |
| Sand and dust (when applicable) | 3.22 | 4.5.19 |
| Explosion (when applicable) | 3.23 | 4.5.20 |
| Salt spray (corrosion) | 3.24 | 4.5.21 |
| Contact resistance | 3.5 | 4.5.2 |
| Rotational torque or operating force (as applicable) | 3.8 | 4.5.5 |
| Seal (when applicable) | 3.17 | 4.5.14 |
| Dielectric withstanding voltage 1/ | 3.18 | 4.5.15 |
| Subgroup IV (4 sample units, divided equally) | | |
| Life (rotational), at rated ac load (resistive) | 3.25 | 4.5.22 |
| Life, low level switching | 3.26 | 4.5.23 |
| Subgroup V | | |
| Solderablitiy (2 sample units only) | 3.27 | 4.5.24 |

1/ Only when seal is applicable.

4.5.4.3 Color. The chromaticity of the light projected shall be determined by spectrographic or other equivalent visual means and shall meet the requirements of 3.4.7.6.

4.5.5 Rotational torque or operating force (as applicable, see 3.1 and 6.1) (see 3.8). Switches shall be tested as specified in 4.5.5.1 or 4.5.5.2, as applicable. The following conditions and procedures shall apply:

a. Mounting: By their normal mounting means, unless otherwise specified (see 3.1 and 6.2.2).

b. Room temperature: The values of torque or force required to rotate the switch through all positions in both directions shall be determined. All values shall be recorded and then the average value shall be recorded. All readings shall be observed to determine whether they are within the limits as specified. On concentric shaft switches, the rotational torque (see 3.1) shall be measured while rotating the inner shaft when a dummy knob (see NASM 91528) with two No. 8 (.164)-32 UNC-2A screws, 90 degrees apart, tightened to 15 pound-inches minimum, is placed on the outer shaft.

c. Minimum temperature: Switches shall be exposed to a temperature of -65°C ±2°C for a period of 4 hours. The minimum and maximum values of torque or force required to rotate the switch, through all positions in both directions, shall be determined while the switch is maintained at -65°C ±2°C. The average torque level shall be not greater than 125 percent of the torque required at room temperature.

4.5.5.1 Rotational torque (applicable to external drive shaft switches, see 3.8.1). Inline switches shall be tested by applying the specified torque (see 3.1 and 6.2.2) to the shaft of the switch.

4.5.5.2 Operating force (applicable to switch modules or stacked switch modules, see 3.8.2). Thumbwheel switches shall be tested by applying the specified force (see 3.1 and 6.1) tangentially to the thumbwheel of the switch, parallel to the mounting surface.

4.5.6 Stops (when applicable, see 3.1 and 6.1) (see 3.9). Switches shall be tested in accordance with 4.5.6.1 as applicable.

4.5.6.1 Thumbwheel switches. Unless otherwise specified (see 3.1 and 6.2.2), a tangential force of 15 pounds ±1 pound shall be applied first in an upward direction, then in a downward direction.

4.5.7 Thermal shock (see 3.10). Switches shall be tested in accordance with method 107 of MIL-STD-202. The following details shall apply:

a. Test-condition letter:
   A: For switches with temperature-life characteristic letter B and letter C.
   B: For switches with temperature-life characteristic letter A and letter D.

b. Measurements before and after cycling: Not applicable.

After the test, switches shall be examined for mechanical and electrical damage, loosening of rivets, and other fastening devices.

4.5.8 Terminal strength (applicable to switches having solder-type terminals, see 3.1 and 6.2.2) (see 3.11). Where the circuit configuration permits, the following minimum number of terminals shall be tested:

a. Three terminals per section, one section per switch for multisection switches.

b. Four terminals for single-section switches.

c. All terminals of the electrical-mechanical-actuator device (when applicable, see 3.1 and 6.2.2).

Two of the terminals shall be adjacent at minimum spacing and located on opposite sides of a throughbolt, if used, where the circuit configuration permits.

4.5.8.1 Pull (see 3.11.1).

4.5.8.1.1 Terminals (except flexible wire leads). Unless otherwise specified (see 3.1 and 6.2.2), a force of 15 pounds ±1 pound shall be applied to the terminals at the normal location for attaching lead wires. The pull force shall be gradually applied to each terminal and maintained for 15 seconds minimum in each of three mutually perpendicular directions as follows:

a. In a direction parallel to the plane of the section and perpendicular to the longitudinal axis of the terminal.

b. In a direction along the longitudinal axis of the terminal.

c. Perpendicular to the plane of the section in a direction in which there is minimum support provided by the insulation.

4.5.8.1.2 Terminals (flexible wire leads). The pull test shall be the same as 4.5.8.1.1, except pull force shall be as specified (see 3.1).

4.5.8.2 Bend (when applicable, see 3.11.2). Terminals bent permanently out of position as a result of the pull test (see 4.5.8.1), shall be tested in accordance with method 211 of MIL-STD-202. The following details and exception shall apply:

a. Test-condition letter: B.

b. Number of bends: Two.

c. Direction of applied force: Perpendicular to the plane of the section in a direction in which there is minimum support provided by the insulation.

After this test, switches shall be examined for evidence of breakage of terminals and visible cracks in either the terminals or the insulating material.

4.5.9 Strength of mounting bushing (when applicable, see 3.1 and 6.2.2) (see 3.12). Bushing-mounted switches shall be mounted on a metal panel in the normal mounting means with the specified hardware. Unless otherwise specified (see 3.1 and 6.2.2), a torque of 25 pound-inches ±1 pound-inches shall be applied to the mounting nut. Switches shall then be examined for damage and loosening and twisting of the bushing relative to the switch front plate assembly. Damage to nonturn device shall not be considered a failure.

4.5.10 Vibration (see 3.13). Switches shall be tested in accordance with the applicable test methods of MIL-STD-202, as follows:

For switches of vibration grade 1: Method 201.
For switches of vibration grade 2: Method 204, test-condition letter A.
For switches of vibration grade 3: Method 204, test-condition letter B.

The following details to each applicable test shall apply:

a. Tests and measurements prior to vibration: Not applicable.

b. Method of mounting: Switches shall be mounted, using appropriate mounting hardware, and secured in a normal manner on a rigid metal panel. The mounting fixture shall be free from resonance over the frequency range. Switches with mounting brackets shall be supported at the end of the last section.

c. Direction of motion: One of the directions of vibration shall be in a plane perpendicular to the longitudinal axis of the switch.

d. Electrical load conditions - Unless otherwise specified (see 3.1), the electrical load shall be the monitoring circuit. The test circuit shall consist of one pair of mated contacts in closed position on each electrical sector (each pole group of contacts that performs a nonduplicating electrical function), series-connected, with each switch under test set at a different operating position.

e. Test and measurements during vibration - Switch contact stability shall be continuously monitored during vibration in accordance with method 310 of MIL-STD-202, except the detection circuit shall be capable of detecting an open or intermittent contact of 1 microsecond duration or less. In the event of indication of failure, the vibration cycle shall be continued long enough to monitor contacts, switch by switch, and section by section, to determine if a switch is defective. If no opening can be found in a switch by switch monitoring, the switch may be considered to be a good unit.

f. Tests and measurements after vibration: Not applicable.

After the test, switches shall be examined for change in shaft position, and evidence of broken, deformed, displaced, and loose parts. Failure of lamp shall not constitute failure of the unit.

4.5.11 Shock (see 3.14). Unless otherwise specified, switches shall be tested in accordance with 4.5.11.1 or 4.5.11.2, as applicable (see 3.1).

4.5.11.1 Method I (specified pulse, for shock type M). Switches shall be tested in accordance with method 213 of MIL-STD-202. The following details and exception shall apply:

a. Special mounting means: Switches shall be mounted by using appropriate mounting hardware and secured in a normal manner.

b. Test-condition letter: I.

c. Electrical load conditions: As specified in 4.5.10d.

d. Measurements during shock - Switch contact stability shall be continuously monitored during shock in accordance with method 310 of MIL-STD-202. In the event of indication of contact opening greater than that allowed, the test shall be modified by applying successive identical blows in the same plane to monitor contacts, switch by switch, section by section, to determine if a switch is defective.

After the test, switches shall be examined for change in shaft position, and evidence of broken, deformed, displaced, and loose parts. Failure of lamp shall not constitute failure of the unit.

4.5.11.2 Method II (high impact, for shock type H). Switches shall be tested in accordance with method 207 of MIL-STD-202. The following details shall apply:

a. Mounting fixtures: As specified in 4.5.11.1a.

b. Electrical load conditions: As specified in 4.5.10d.

c. Monitoring during shock: As specified in 4.5.11.1d. Switch-contact stability shall be monitored for each blow.

d. Measurements after shock: Not applicable.

After the test, switches shall be examined for change in shaft position, and evidence of broken, deformed, displaced, and loose parts. Failure of lamp shall not constitute failure of the unit.

4.5.12 Insulation resistance (see 3.15). Switches shall be tested in accordance with method 302 of MIL-STD-202. The following details and exception shall apply:

a. Test-condition letter: A.

b. Points of measurement: Each switch shall be measured separately:

(1) Between all mutually insulated terminals and all mutually connected terminals in a sufficient number of dial positions to check all possible leakage paths between terminals.

(2) Between all terminals tied together and frame or ground.

c. Application of test voltage: Instantaneous.

4.5.13 Lamp retention (when applicable, see 3.1 and 6.2.2) (see 3.16). Lamp-retention adapters (see figure 1), simulating the appropriate lamp, shall be inserted into the lamp socket portion of the switch and then withdrawn. This shall be repeated for a total of five times using both adapters. With the lamp-retention adapter installed in the socket portion, and with the switch held so that base of the lamp-retention adapter points directly downward, the lamp-retention adapter shall remain captive to the switch.

4.5.14 Seal (when applicable, see 3.1 and 6.2.2) (see 3.17). Before conducting the test, all gaskets which normally can be replaced in service without disassembly of the switch proper, shall be disassembled from the switch and then reassembled with the switch. The switch sections or modules shall be mounted to the test enclosure in accordance with method I or method II (see 4.5.14.1 and 4.5.14.2), as specified (see 3.1). The seal test enclosure shall then be subjected to a gradually decreasing pressure at a rate of 10 pounds per square inch per 1 minute until a negative pressure of 10 $lbf/in^2$ (gauge) $\pm$1 $lbf/in^2$ (gauge) is reached and then maintained at that pressure for 5 minutes. During this period of minimum pressure, the switches shall be operated for 25 cycles (see 6.4.9) of rotation, 360 clockwise and 360 degrees counterclockwise. A switch with stops shall be operated in both directions to the limits of the stops; however, the switch shall be operated for an additional number of rotations necessary to equal a total angular rotation of 25 cycles of 360 degrees in both directions. For unidirectional rotation devices, the cycle shall consist of 25 cycles of 720 degrees. The pressure shall be increased to ambient barometric pressure at the same rate as it was decreased while the switch is still in the test enclosure. When the chamber has reached the ambient barometric pressure, the switches are to be cycled for 25 complete cycles at 360 degrees in both directions. After removal from the seal test enclosure, the external portion of the printed circuit board shall be wiped dry. The switch sections or modules shall be so placed that printed circuit boards are in a horizontal position with printed circuit contacts and brushes on top, when subjected to the dielectric withstanding voltage test (see 4.5.15). The dielectric withstanding voltage test must be conducted within 30 minutes after removal from the seal test enclosure.

4.5.14.1 Method I (mounting). The switch sections or modules shall be submerged in water to a depth of 6 inches $\pm$2 inches (see figure 2).

4.5.14.2 Method II (mounting). The switch shall be mounted externally on a test enclosure (see figure 2) by its normal mounting means and the enclosure filled with water so that the switch operating means is in water to a depth of 6 inches $\pm$2 inches.

4.5.15 Dielectric withstanding voltage (see 3.18). Switches shall be tested in accordance with 4.5.15.1, and when applicable (see 3.1 and 6.2.2), in accordance with 4.5.15.2.

4.5.15.1 At atmospheric pressure. Switches shall be tested in accordance with method 301 of MIL-STD-202. Unless otherwise specified (see 3.1), the following details shall apply:

a. Magnitude of test voltage: 1,000 volts.

b. Nature of potential: AC.

c. Points of application of test voltage: Each test applies for each switch section:

(1) Between all mutually insulated terminals in a sufficient number of dial positions to check all possible leakage paths between terminals.

(2) Between all terminals tied together and frame or ground.

d. Measurements during test: Leakage current.

After the test, switches shall be examined for evidence of arcing, flashover, breakdown of insulation and damage.

4.5.15.2 At reduced barometric pressure. Switches designed for operation above 10,000 feet shall be tested as specified in 4.5.15.1 and in accordance with method 105 of MIL-STD-202. The following details shall apply:

a. Method of mounting: By normal mounting means on a corrosion-resistant panel.

b. Test-condition letter: C or D, as specified (see 3.1).

c. Test during subjection to reduced pressure: The switch contacts specified in 4.5.15.1c shall be tested at 450 volts rms, unless other specified (see 3.1).

After the test, switches shall be examined for evidence of arcing, flashover, breakdown of insulation, and damage.

4.5.16 Moisture resistance (see 3.19). Switches shall be tested in accordance with 4.5.16.1 or 4.5.16.2, as specified (see 3.1 and 6.2.2).

4.5.16.1 Method I. Switches shall be tested in accordance with method 106 of MIL-STD-202. The following details and exceptions shall apply:

a. Mounting: Switches shall be mounted on a corrosion-resistant metal panel. Half of the switches shall be tested in the "up" position and half shall be tested in the "down" position.

b. Initial measurement: Not applicable.

c. Polarization: During step 1 to step 6 inclusive, a polarization voltage of 100 volts dc shall be applied between two terminals tied together on opposite sides and adjacent to a throughbolt, or a terminal adjacent to a grounded metal portion if no through bolting is used, and the metal panel. Polarization voltage shall also be applied to two other adjacent terminals elsewhere on the switch section. One section of each switch should be so tested. The negative polarity shall be applied to the metal panel.

d. Step 7a and step 7b shall not apply.

e. Loading voltage: Not applicable.

f. Final measurements: After the conclusion of the test, while the switches are still in the humidity chamber, insulation resistance shall be measured within 15 minutes after opening of the chamber and while switches are still in the humidity chamber as specified in 4.5.12, unless otherwise specified (see 3.1). At the end of the drying period, insulation resistance shall again be measured as specified in 4.5.12, unless otherwise specified (see 3.1 and 6.2.2). At the end of the drying period, the switch section or modules, so placed that their printed circuit boards are in horizontal position with printed circuit contacts and brushes on top, shall be subjected to the dielectric withstanding voltage test (see 4.5.15).

g. Examination of finish: For switches utilizing a painting process to obtain the black matte or lusterless finish on that portion of the switch visible from the front of the panel: After completion of the moisture-resistance test and immediately after opening the chamber, the painted portion of the switch shall be wiped dry and, within 1 minute, several sets of lines shall be scratched to a minimum depth of .003 inch (0.08 mm) with a sharp pointed stylus. Two parallel lines at least .250 inch (6.35 mm) long and .125 inch (3.18 mm) apart, and two other parallel lines intersecting the first two at right angles shall be scratched on smooth surfaces in several places. A .500 inch (12.70 mm) wide strip of waterproof tape, of sufficient length to cover the lines, shall be firmly pressed over the scratched lines with the adhesive side against the scratched lines. The tape shall then be abruptly pulled off in one continuous motion. The surface shall be examined for any sign of peeling or chipping of the finish beyond .005 inch (0.13 mm) from the scratch lines.

After the test, switches shall be examined for evidence of measling, corrosion, breaking, cracking, spalling, or loosening of terminals. A movement of the terminals within the confines of the terminal-anchoring device shall be permitted provided continuity of electrical contact is not impaired. Mounting hardware shall be removed.

4.5.16.2 Method II. Switches shall be tested in accordance with method 106 of MIL-STD-202. The following details and exceptions shall apply:

a. Mounting: As specified in 4.5.16.1a.

b. Initial measurement: Not applicable.

c. Polarization: As specified in 4.5.16.1c.

d. Step 7a and step 7b shall not apply.

e. Loading voltage: Not applicable.

f. Final measurements: After the conclusion of the test, a switch shall be removed from the chamber and the insulation resistance read within 15 minutes. Each individual switch shall be so removed and tested. The chamber door shall be closed after each switch removal. At the end of the drying period, insulation resistance shall again be measured as specified in 4.5.12, unless otherwise specified (see 3.1 and 6.2.2). At the end of the drying period, the switch section or modules, so placed that their printed circuit boards are in horizontal position with printed circuit contacts and brushes on top, shall be subjected to the dielectric withstanding voltage test (see 4.5.15).

g. Examination of finish: For switches utilizing a painting process to obtain the black matte or lusterless finish on that portion of the switch visible from the front of the panel: After completion of the moisture-resistance test and immediately after opening the chamber, the painted portion of the switch shall be wiped dry and, within 1 minute, several sets of lines shall be scratched to a minimum depth of .003 inch (0.08 mm) with a sharp pointed stylus. Two parallel lines at least .250 inch (6.35 mm) long and .125 inch (3.18 mm) apart, and two other parallel lines intersecting the first two at right angles, shall be scratched on smooth surfaces in several places. A .500 inch (12.70 mm) wide strip of waterproof tape, of sufficient length to cover the lines, shall be firmly pressed over the scratched lines with the adhesive side against the scratched lines. The tape shall then be abruptly pulled off in one continuous motion. The surface shall be examined for any sign of peeling or chipping of the finish.

After the test, switches shall be examined for evidence of measling, corrosion, breaking, cracking, spalling, or loosening of terminals. A movement of the terminals within the confines of the terminal-anchoring device shall be permitted provided continuity of electrical contact is not impaired. Mounting hardware shall be removed.

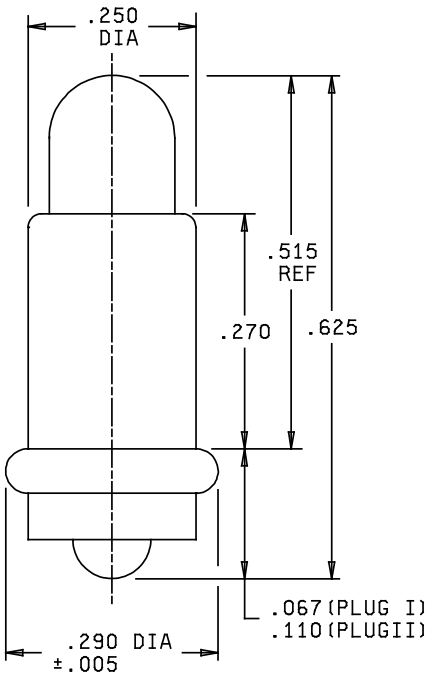


T-1 ¾ midget
flanged base lamp.

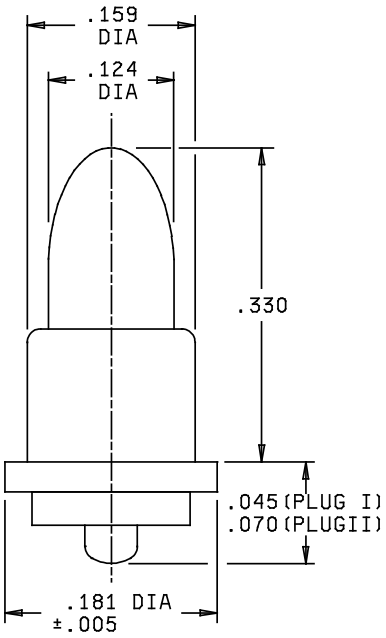


T-1 subminiature
flanged base lamp.

| Inches | mm |
|---|---|
| .005 | 0.13 |
| .045 | 1.14 |
| .067 | 1.70 |
| .070 | 1.78 |
| .110 | 2.79 |
| .124 | 3.15 |
| .159 | 4.04 |

| Inches | mm |
|---|---|
| .181 | 4.60 |
| .250 | 6.35 |
| .270 | 6.86 |
| .290 | 7.37 |
| .330 | 8.38 |
| .515 | 13.08 |
| .625 | 15.88 |

NOTES:
1. Dimensions are in inches.
2. Metric equivalents are given for general information only.
3. Unless otherwise specified, tolerance is ±.001 (0.03 mm).

FIGURE 1. Lamp retention adapter.

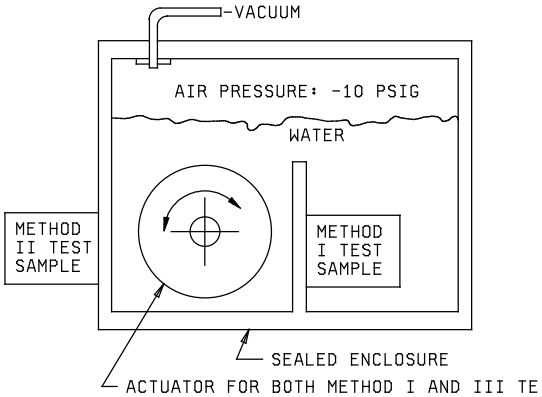


FIGURE 2. Seal test enclosure.

4.5.17 EMI/RFI shielding (when specified, see 3.1 and 3.20).

4.5.17.1 EMI/RFI shielding case grounding (when specified, see 3.1) (see 3.20). The switch shall be mounted by its normal mounting means to an electrically conductive panel. The resistance shall be measured from the RFI shielding on the switch (plated surface) to the mounting panel. The measurement shall be made using an open circuit voltage of 6 V dc and a maximum current of 10 mA.

4.5.17.2 EMI/RFI shielding efficiency (when specified, see 3.1) (see 3.20). Switches shall be tested utilizing a test setup or equivalent as shown on figure 3 and measurements shall be made as follows:

a. With the door open and the antenna in the "initial setup" position, establish a test level over the 200 MHz to 1 GHz range so that the received signal level is at least as many dB above the RF ambient level as that of the shielded enclosure attenuation.

b. Record the received signal level and the signal generator output levels for the following test frequencies: 200 Hz, 225 Hz, 250 Hz, 275 Hz, 300 Hz, 325 Hz, 350 Hz, 375 Hz, 400 Hz, 600 Hz, 800 Hz, and 1,000 MHz.

c. Move the antenna to the final test positions, close the door and with an RF-tight blank panel between the antenna, measure the integrity of the enclosure by setting the signal generator to the same output and record the received signal level for each frequency used in 4.5.17.2b. The shielded enclosure attenuation is then calculated using the following equation:

$$\text{Attenuation (dB)} = 20 \log \frac{E1}{E2}$$

Where E1 is the receiver reading in 4.5.17.2b, and E2 is the receiver reading in 4.5.17.2c.

d. Mount the test switch in the blank panel with the rear of the switch outside of the shielded enclosure (toward the signal generator antenna). The switch shall be mounted as it would be for normal installation using the mounting hardware supplied or recommended. Repeat the measurements in 4.5.17.2c and calculate the shielding attenuation of the switch using the new receiver readings and the following formula:

$$\text{Attenuation (dB)} = 20 \log \frac{E1}{E3}$$

Where E1 is the receiver reading in 4.5.17.2b, and E3 is the receiver reading in 4.5.17.2d.

4.5.18 Acceleration (when applicable, see 3.1 and 6.2.2) (see 3.21). Switches shall be subjected to an acceleration force of 20G attained within 2 minutes. The force shall be maintained for 1 minute in each direction along each of its three mutually perpendicular axes. The switches shall be monitored for opening of closed contacts and closing of open contacts with a circuit utilizing a pilot lamp. Half of the units shall be tested with the actuating means in one position and the other half of the units shall be tested with the actuating means in an alternate position.

4.5.19 Sand and dust (when applicable, see 3.1 and 6.2.2) (see 3.22). Switches shall be tested in accordance with method 110 of MIL-STD-202, test condition B. During the test, the switches shall be operated for 1,000 cycles. The cycling rate shall not exceed 10 cycles of operation per minute. Switches shall be examined for evidence of mechanical and electrical damage and change in operating torque.

4.5.20 Explosion (when applicable, see 3.1 and 6.2.2) (see 3.23). Switches shall be tested in accordance with method 109 of MIL-STD-202. The following detail shall apply: Electrical load: Switches shall be operated with the dc resistive load specified for atmospheric pressure (see 3.1).

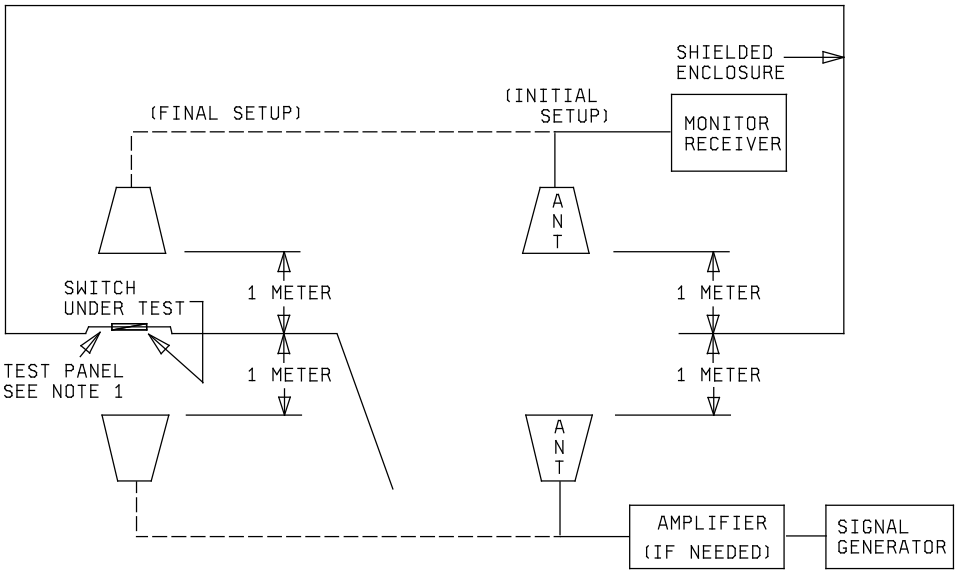


FIGURE 3. Block diagram of switch shielding efficiency.

4.5.21 Salt spray (corrosion) (see 3.24). Switches and their mounting hardware, assembled with their mounting means, shall be tested in accordance with method 101 of MIL-STD-202. The following details shall apply:

a. Test-condition letter: B.

b. Measurements after exposure: Not applicable.

After the test, switches and mounting hardware shall be examined for evidence of excessive corrosion. Mounting hardware shall be removed.

4.5.22 Life (rotational) (see 3.25). Switches shall be tested in accordance with 4.5.22.1, and when applicable (see 3.1), in accordance with 4.5.22.2.

4.5.22.1 At atmospheric pressure. Switches shall be tested in accordance with method 206 of MIL-STD-202. An actuating mechanism shall be used that basically duplicates the function of the mechanism described in method 206 for the switches. The following details and exception shall apply:

a. Test potential and load: Each switch section shall be energized by the specified test loads (see 3.1), with each load applied to approximately the same number of sections. The first and last section shall be energized with the resistive load of the highest voltage rating. The specified load for each section shall be wired to the contacts which are subject to making or breaking the circuit during rotation of the switch shaft as follows:

(1) Nonshorting type section: All contacts.

(2) Shorting type section: Alternate contacts only. The first and last section shall be energized with the resistive load of the highest voltage rating. The specified load for each section shall be wired to each contact of the section, which is subject to making or breaking during rotation of the switch shaft. Where there are insufficient switch sections to accommodate all rated loads, the loads shall be apportioned, approximately equally, among the other switches being subjected to the life (rotational) test.

b. Cycling and cycle rate: Manually actuated switches shall be cycled at the rate of 10 cycles per minute. At the option of the contractor, cycling may be interrupted, periodically, after each 5,000 cycles of operation. Each shaft of concentric shaft switches shall be rotated the total number of cycles prescribed.

c. Test-condition letter: As specified (see 3.1).

d. Operate cycle: The monitoring apparatus shall record the number of operating cycles. The test switches should be manually operated, and contact resistance readings taken, at the beginning of the test and immediately following the conclusion of each of the environments listed below, and changes in contact resistance exceeding the maximum specified shall be noted. Unless otherwise specified (see 3.1), the test shall be conducted in the following sequences and environments:

(1) 25 percent of the test cycles at room ambient temperature.

(2) 25 percent of the test cycles at maximum rated temperature.

(3) A 2-hour noncycling period at minimum rated temperature.

(4) 25 percent of the test cycles at minimum rated temperature.

(5) 25 percent of the test cycles at room ambient temperature.

4.5.22.2 At reduced barometric pressure. Switches designed for operation above 10,000 feet shall be tested as specified in 4.5.22.1, and in accordance with method 105 of MIL-STD-202, except that the temperature condition shall be room ambient. The following details shall apply:

a. Method of mounting: On a vertical corrosion-resistant panel.

b. Test-condition letter: C or D, as applicable (see 3.1).

c. Tests during subjection to reduced pressure: Switches shall be operated at the applicable test loads (see 3.1).

After the test, switches shall be examined for broken, deformed, displaced, or loose parts.

4.5.23 Life, low level switching (see 3.26). Switches shall be tested in accordance with 4.5.23.1, as applicable.

4.5.23.1 Method II (applicable to thumbwheel and push button). Switches shall be tested in accordance with method 206 of MIL-STD-202. An actuating mechanism shall be used that basically duplicates the function of the mechanism described in method 206 for the switches. The following details and exception shall apply:

a. Contact load: In accordance with method 311 of MIL-STD-202. Both the normally closed and normally open contacts shall be loaded. The similar contacts may be connected in series or individually connected to the load, at the option of the contractor.

b. Contact resistance: The maximum contact resistance shall not exceed 1 ohm.

c. Test-condition letter: The number of operations shall be the same as shown for temperature-life characteristics (see 3.1).

d. Operate cycle: The cycling rate shall be approximately 10 cycles per minute. The monitoring apparatus should record the number of operating cycles. The test switches shall be manually operated at rated load, and contact resistance readings taken at the beginning of the test and immediately following the conclusion of each of the environments listed below, and changes in contact resistance exceeding the maximum specified should be noted. Unless otherwise specified (see 3.1), the test shall be conducted in the following sequences and environments:

(1) 25 percent of the test cycles at room ambient temperature.

(2) 25 percent of the test cycles at maximum rated temperature.

(3) A 2-hour noncycling period at minimum rated temperature.

(4) 25 percent of the test cycles at minimum rated temperature.

(5) 25 percent of the test cycles at room ambient temperature.

4.5.24 Solderability (see 3.27). Switches shall be tested in accordance with method 208 of MIL-STD-202, except the dipping device need not be used. The following details shall apply:

a. Number of terminations for each part to be tested: Two.

b. Solder dip: For printed circuit board terminations, the depth of dip in flux and solder shall be sufficient to cover the termination (approximately .375 inch (9.53 mm)).

c. Examination of terminations: Evaluation of acceptable solderability shall be in accordance with the method for evaluation of lug and tab terminals. This evaluation shall also apply to printed circuit board terminals.

This test may be performed on two terminals on each of an equivalent number of additional printed circuit boards identical to those incorporated into the switch being tested.

## 5. PACKAGING

5.1 Packaging. For acquisition purposes, the packaging requirements shall be as specified in the contract or order (see 6.2). When actual packaging of materiel is to be performed by DoD personnel, these personnel need to contact the responsible packaging activity to ascertain requisite packaging requirements. Packaging requirements are maintained by the Inventory Control Point's packaging activity within the Military Department or Defense Agency, or within the Military Department's System Command. Packaging data retrieval is available from the managing Military Department's or Defense Agency's automated packaging files, CD-ROM products, or by contacting the responsible packaging activity.

6. NOTES

(This section contains information of a general or explanatory nature that may be helpful, but is not mandatory.)

6.1 Intended use. The switches covered by this specification are intended for use in low power ac and dc switching applications for use in electronic and communication equipment. These switches are military unique due to the fact that these devices must be able to operate satisfactorily in military systems under the following demanding conditions: -65°C to +125°C operating temperature range, 15 Gs of vibration, 100Gs of shock, 96 hours of salt spray, 20Gs of acceleration, 100,000 cycles of endurance at the maximum temperature. In addition these military requirements are verified under a qualification system. Commercial components are not designed to withstand these military environmental conditions.

6.2 Acquisition requirements. Acquisition documents must specify the following:

a. Title, number, and date of the specification.

b. Packaging requirements (see 5.1).

6.2.1 Switches covered by specification sheets and identified by military part numbers. Acquisition documents must specify the following:

a. Title, number, and date of this specification.

b. Title, number, and date of the applicable specification sheet and the complete PIN (see 1.2.1 and 3.1).

c. If lamps are to be omitted (see 3.4.7.3).

6.2.2 Switch types covered by specification sheets and identified by type designation. Acquisition documents must specify the following:

a. Title, number, and date of this specification.

b. Title, number, and date of the applicable specification sheet, and the complete type designation (see 1.2.2 and 3.1).

c. Interface and dimension requirements, as applicable (see 3.4).

d. Circuit configuration (see 3.6).

e. Luminance; photometric brightness (see 3.7), if other than as specified, deviation should be approved by procuring activity.

f. If lamps are to be omitted (see 3.4.7.3).

g. Positive detent or indexing mechanism (see 3.4.4).

6.2.2.1 For thumbwheel switches. In addition to items required in 6.2.2, the following must be specified:

a. Total number of switch stations (see 3.4).

b. Whether spacers are required between switch stations.

c. Station location and designation of specific switch circuits and spacers (if required) in switch assembly.

d. Indicator ring color (see 3.4.7.1).

e. Indicator ring marking (see 3.28.1)

f. Letter, numeral, or character color.

6.2.2.2 Truth table (circuit configuration). The following are typical truth tables used with an explanation of their functions in relation to their input and output codes.

a. Straight decimal:

| Dial Marking | Common “C” Conn to: |
|---|---|
| 0 | 0 |
| 1 | 1 |
| 2 | 2 |
| 3 | 3 |
| 4 | 4 |
| 5 | 5 |
| 6 | 6 |
| 7 | 7 |
| 8 | 8 |
| 9 | 9 |

(1) Dial reads 0; common C active with terminal "0" while other terminals are non-active.

(2) Dial reads 1; common C active with terminal "1" while other terminals are non-active.

(3) Dial reads 2; common C active with terminal "2" while other terminals are non-active, etc.

b. Binary coded decimal:

| Dial Marking | Common “C” Conn to: | | | |
|---|---|---|---|---|
| | 1 | 2 | 4 | 8 |
| 0 | | | | |
| 1 | • | | | |
| 2 | | • | | |
| 3 | • | • | | |
| 4 | | | • | |
| 5 | • | | • | |
| 6 | | • | • | |
| 7 | • | • | • | |
| 8 | | | | • |
| 9 | • | | | • |

(1) Dial reads 0; all terminals nonactive.

(2) Dial reads 1; common C active with terminal "1" while other terminals are nonactive.

(3) Dial reads 2; common C active with terminal "2" while other terminals are non-active.

(4) Dial reads 3; common C active with terminal "1" and "2" while other terminals are nonactive, etc.

c. Binary coded decimal plus complement:

| Dial Marking | Common “C” Conn to: | | | | | | | | |
|---|---|---|---|---|---|---|---|---|---|
| | 1 | 2 | 4 | 5 | | $\overline{1}$ | $\overline{2}$ | $\overline{4}$ | $\overline{8}$ |
| 0 | | | | | | • | • | • | • |
| 1 | • | | | | | | • | • | • |
| 2 | | • | | | | • | | • | • |
| 3 | • | • | | | | | | • | • |
| 4 | | | • | | | • | • | | • |
| 5 | • | | • | | | | • | | • |
| 6 | | • | • | | | • | | | • |
| 7 | • | • | • | | | | | | • |
| 8 | | | | • | | • | • | • | |
| 9 | • | | | • | | | • | • | |

(1) Dial reads 0; common C connected to terminals 1, 2, 4, and 8 while other terminals are nonactive.

(2) Dial reads 1; common C connected to terminals 1, 2, 4, and 8 while other terminals are nonactive.

(3) Dial reads 2; common C connected to terminals 2, 1, 4, and 8 while other terminals are nonactive, etc.

d. Binary coded octal with separate common for not true bits:

| Dial Marking | Com. X ( ) & Y( )Conn to: | | |
|---|---|---|---|
| | 1 | 2 | 4 |
| 0 | o | o | o |
| 1 | • | o | o |
| 2 | o | • | o |
| 3 | • | • | o |
| 4 | o | o | • |
| 5 | • | o | • |
| 6 | o | • | • |
| 7 | • | • | • |

(1) Dial reads 0; common Y connected to terminals 1, 2, and 4 while common X is not connected to any terminals.

(2) Dial reads 1; common X connected to terminal 1, while common Y is connected to terminals 2 and 4.

(3) Dial reads 2; common X connected to terminal 2, while common Y is connected to terminals 1 and 3, etc.

6.3 6.3 Qualification. With respect to products requiring qualification, awards will be made only for products which are, at the time of award of contract, qualified for inclusion in Qualified Products List (QPL) whether or not such products have actually been so listed by that date. The attention of the contractors is called to these requirements, and manufacturers are urged to arrange to have the products that they propose to offer to the Federal Government tested for qualification in order that they may be eligible to be awarded contracts or orders for the products covered by this specification. Information pertaining to qualification of products may be obtained via email to vqp.chief@dla.mil or from the DLA Land and Maritime, Attn: DLA Land and Maritime-VQP, 3990 East Broad Street, Columbus, OH 43213-1199.

6.4 Definitions.

6.4.1 Thumbwheel switch. A thumbwheel switch is a panel mounted switching device which provides a visual indication of switch position. Its means of actuation can be by a "knurled" or "tabbed" wheel.

6.4.2 Switch module . A switch module is a self-contained thumbwheel switch.

6.4.3 Switch section . A switch section is the section containing the electrical circuitry (similar to "switch deck" as applied to thumbwheel switches).

6.4.3 Plating. When base metals intended for intermetallic contact form couples, they are to be plated with those metals which will reduce the potential difference.

6.4.5 Stacked switch module (see 3.4.5.3). A stacked switch module is a thumbwheel switch assembly consisting of one switch module to which one or more switch decks have been affixed. A stacked switch module utilized one thumbwheel with all rotors keyed to and driven by a common actuating shaft.

6.4.6 Thumbwheel switch assembly. A thumbwheel switch assembly is a switch assembly incorporating one or more switch modules or stacked switch modules on a common mounting bracket.

6.4.7 Switch deck. A switch deck is a switching mechanism permanently affixed to a switch module, and whose rotor is permanently keyed to the rotor of the switch module. It does not contain the "knurled" or "tabbed" wheel.

6.4.8 Switch station. A switch station is a specific switch module or switch section location in a thumbwheel switch assembly.

6.4.9 Push-button switch assembly. A panel mounted switching device incorporating one or more switch sections. The normal actuation is perpendicular to the plane of the instrument panel.

6.4.10 Cycle (see 4.5.14). A cycle should consist of 360 degrees clockwise and 360 degrees counterclockwise rotations. When a device has stops, it should be operated an additional number of rotations to equal a total of 360 degrees clockwise and 360 degrees counterclockwise angular rotations. For unidirectional rotation devices, a cycle should consist of 720 degrees rotation.

6.5 Angle of throw (see 1.2.2.3). The number of angular degrees the shaft rotates between adjacent detent positions.

6.6 Insulation (see 3.3.1).

6.6.1 Thermoplastic. It is recommended that thermoplastic materials be tested in accordance with MIL-M-24519 to the requirements specified in 3.3.1.

6.7 Printed circuit boards. It is recommended that printed circuit board design be accomplished in accordance with MIL-PRF-31032

6.7.1 Conformal coating. It is recommended that conformal coating material be in accordance with MIL-I-46058 and be applied to meet the requirements specified in 3.3.1.1.

6.8 Dissimilar metals (see 3.3.2.2). Dissimilar metals and compatible couples are defined in MIL-STD-889.

6.9 Potting compounds (see 3.3.5). It is recommended that potting compounds that meet requirement 47 of MIL-HDBK-454 be considered for use.

6.10 Terminal finishes and platings ( see 3.4.3.1, y, 3.4.5.2).

6.10.1 Gold plating. It is recommended that SAE-AMS2422, type III, class 1 be considered for meeting the gold plating requirements of this specification.

6.10.2 Tin-lead plating. It is recommended that SAE-AMS-P-81728 be considered for meeting the tin-lead plating requirements of this specification.

6.10.3 Nickel plating. It is recommended that SAE-AMS-QQ-N-290 be considered for meeting the nickel requirements of this specification.

6.10.4 Silver plating. It is recommended that ASTM-B700 be considered for meeting the silver requirements of this specification.

6.10.5 Hot soldering dip. It is recommended that solder dip (60-40 tin lead), in accordance with J-STD-006, be considered for meeting the requirements of this specification.

6.11 Locking sealant. It is recommended that ASTM-D5363 be considered for meeting the locking sealant requirements of this specification in 3.4.1.2.

6.12 Subject term (key word) listing.

Communication
Electronic
Illuminated
Legend
Low power
Luminance

6.13 PIN. This specification requires a PIN that describes technology and appropriate references to associated documents (see 1.2.1 and 3.1).

6.14 Environmentally preferable material. Environmentally preferable materials should be used to the maximum extent possible to meet the requirements of this specification. As of the dating of this document, the U.S. Environmental Protection Agency (EPA) is focusing efforts on reducing 31 priority chemicals. The list of chemicals and additional information is available on their website at http://www.epa.gov/osw/hazard/wastemin/priority.htm. Included in the EPA list of 31 priority chemicals are cadmium, lead, and mercury. Use of these materials should be minimized or eliminated unless needed to meet the requirements specified herein (see Section 3).

6.15 Tin whisker growth. The use of alloys with tin content greater than 97 percent, by mass, may exhibit tin whisker growth problems after manufacture. Tin whiskers may occur anytime from a day to years after manufacture and can develop under typical operating conditions, on products that use such materials. Conformal coatings applied over top of a whisker-prone surface will not prevent the formation of tin whiskers. Alloys of 3 percent lead, by mass, have shown to inhibit the growth of tin whiskers. For additional information on this matter, refer to ASTM-B545 (Standard Specification for Electrodeposited Coatings of Tin).

6.16 Changes from previous issue. The margins of this specification are marked with vertical lines to indicate where modifications from this revision were made. This was done as a convenience only and the Government assumes no liability whatsoever for any inaccuracies in these notations. Bidders and contractors are cautioned to evaluate the requirements of this document based on the entire content irrespective of the marginal notations.

Custodians:
Army - CR
Navy - EC
Air Force - 85
DLA - CC

Review activities:
Army - AV, CR4, MI
Navy - AS, MC, OS
Air Force – 99

Preparing activity:
DLA - CC

(Project 5930-2011-109)

NOTE: The activities listed above were interested in this document as of the date of this document. Since organizations and responsibilities can change, you should verify the currency of the information above using the ASSIST Online database at https://assist.dla.mil.