The documentation and process conversion measures necessary to comply with this revision shall be completed by 15 August 2015.

INCH-POUND

MIL-PRF-19500/366R
15 May 2015
SUPERSEDING
MIL-PRF-19500/366P
23 October 2012

PERFORMANCE SPECIFICATION SHEET

* TRANSISTOR, NPN, RADIATION HARDENED, SILICON, AMPLIFIER,
TYPES 2N3498, 2N3499, 2N3500, 2N3501, JAN, JANTX, JANTXV, JANS, JANHC, AND JANKC

Device types 2N3498, 2N3499, 2N3500 and their corresponding L suffix versions are inactive for new design after 14 April 1995.

This specification is approved for use by all Departments and Agencies of the Department of Defense.

The requirements for acquiring the product described herein shall consist of this specification sheet and MIL-PRF-19500.

1. SCOPE

* 1.1 Scope. This specification covers the performance requirements for NPN, silicon, radiation hardened, low-power amplifier and switching transistors. Four levels of product assurance are provided for each encapsulated device (JAN, JANTX, JANTXV, and JANS). Two levels of product assurance are provided for unencapsulated die (JANHC and JANKC).

* 1.2 Package outlines and die topography. The device package for the encapsulated device type are as follows: TO-5 and TO-39 in accordance with figure 1, surface mount version in accordance with figure 2 (2N3501UB only) and figure 3 (U4 suffix versions). The dimensions and topography for JANHC and JANKC unencapsulated die are as follows: B version die in accordance with figure 4, and C version die in accordance with figure 5.

1.3 Maximum ratings. Unless otherwise specified T_A = +25°C.

Types	P_T T_A = +25°C (1)	P_T T_C = +25°C (1)	P_T T_{SP} = +25°C (1)	$R_{\theta JA}$	$R_{\theta JC}$	$R_{\theta JSP}$	V_{CBO}	V_{CEO}	V_{EBO}	I_C	T_J and T_{STG}
	W	W	W	°C /W	°C /W	°C /W	V dc	V dc	V dc	mA dc	°C
2N3498, L	1	5	N/A	175	30	N/A	100	100	6	500	-65 to +200
2N3498U4	1	4	N/A	175	15	N/A	100	100	6	500	
2N3499, L	1	5	N/A	175	30	N/A	100	100	6	500	
2N3499U4	1	4	N/A	175	15	N/A	100	100	6	500	
2N3500, L	1	5	N/A	175	30	N/A	150	150	6	300	
2N3500U4	1	4	N/A	175	15	N/A	150	150	6	300	
2N3501, L	1	5	N/A	175	30	N/A	150	150	6	300	
2N3501U4	1	4	N/A	175	15	N/A	150	150	6	300	
2N3501UB	.5	N/A	1.5	325	N/A	90	150	150	6	300	

(1) See derating curve figures 6, 7, 8, 9, and 10.

Comments, suggestions, or questions on this document should be addressed to DLA Land and Maritime, ATTN: VAC, P.O. Box 3990, Columbus, OH 43218-3990, or emailed to Semiconductor@dla.mil. Since contact information can change, you may want to verify the currency of this address information using the ASSIST Online database at https://assist.dla.mil .

AMSC N/A

FSC 5961

1.4 Primary electrical characteristics. Unless otherwise specified, T_A = +25°C.

Type	h_{FE} at V_{CE} = 10 V dc								$\|h_{fe}\|$ V_{CE} = 20 V dc I_C = 20 mA dc f = 100 MHz		C_{obo} V_{CB} = 10 V dc I_E = 0 100 kHz ≤f ≤ 1 MHz	
	h_{FE1} (1) I_C = 0.1 mA dc		h_{FE4} (1) I_C = 150 mA dc		h_{FE5} (1) I_C = 300 mA dc		h_{FE6} (1) I_C = 500 mA dc					
	Min	Max	Min	Max	Min	Max	Min	Max	Min	Max	pF Min	pF Max
2N3498, L	20		40	120			15		1.5	8.0		10
2N3498U4	20		40	120			15		1.5	8.0		10
2N3499, L	35		100	300			20		1.5	8.0		10
2N3499U4	35		100	300			20		1.5	8.0		10
2N3500, L	20		40	120	15				1.5	8.0		8
2N3500U4	20		40	120	15				1.5	8.0		8
2N3501, L	35		100	300	20				1.5	8.0		8
2N3501U4	35		100	300	20				1.5	8.0		8
2N3501UB	35		100	300	20				1.5	8.0		8

(1) Pulsed (see 4.5.1).

Types (1)	$V_{CE(sat)}$ (1)				$V_{BE(sat)}$ (1)				t_{on}	t_{off}
	I_C = 10 mA dc I_B = 1 mA dc		I_C = 300 mA dc I_B = 30 mA dc		I_C = 10 mA dc I_B = 1 mA dc		I_C = 300 mA dc I_B = 30 mA dc		I_C = 150 mA dc I_{B1} = 15 mA dc V_{EB} = 5 V dc	I_C = 150 mA dc I_{B1} = -I_{B2} = 15 mA dc
	Min V dc	Max V dc	Min V dc	Max V dc	Min V dc	Max V dc	Min V dc	Max V dc	Max ns	Max ns
2N3498		0.2		0.6		0.8		1.4	115	1,150
2N3498U4		0.2		0.6		0.8		1.4	115	1,150
2N3499		0.2		0.6		0.8		1.4	115	1,150
2N3499U4		0.2		0.6		0.8		1.4	115	1,150
2N3500		0.2				0.8			115	1,150
2N3500U4		0.2				0.8			115	1,150
2N3501		0.2				0.8			115	1,150
2N3501U4		0.2				0.8			115	1,150
2N3501UB		0.2				0.8			115	1,150

(1) Pulsed (see 4.5.1).

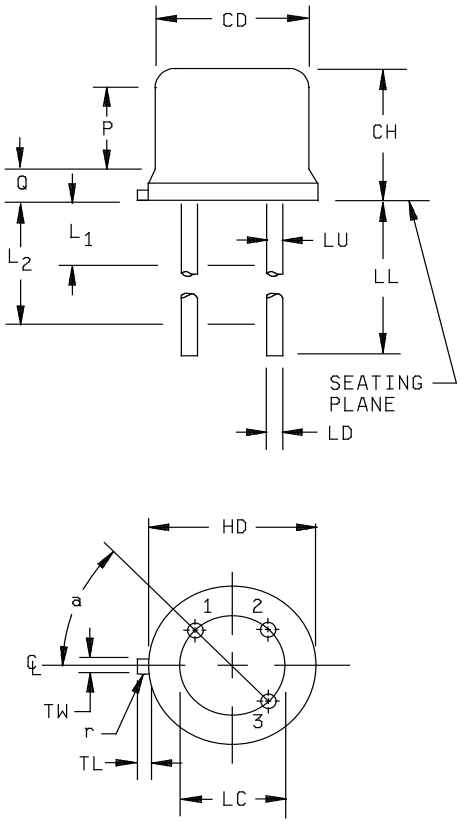

Symbol	Dimensions				Notes
	Inches		Millimeters		
	Min	Max	Min	Max	
CD	.305	.335	7.75	8.51	
CH	.240	.260	6.10	6.60	
HD	.335	.370	8.51	9.40	
LC	.200 TP		5.08 TP		6
LD	.016	.021	0.41	0.53	7
LL	See notes 7, 12, and 13				
LU	.016	.019	0.41	0.48	7, 13
L_1		.050		1.27	13
L_2	.250		6.35		13
TL	.029	.045	0.74	1.14	3
TW	.028	.034	0.71	0.86	10, 11
P	.100		2.54		5
Q		.050		1.27	4
r		.010		.25	11
α	45° TP		45° TP		6

NOTES:
1. Dimensions are in inches.
2. Millimeters are given for general information only.
3. Symbol TL is measured from HD maximum.
4. Details of outline in this zone are optional.
5. Symbol CD shall not vary more than .010 (0.25 mm) in zone P. This zone is controlled for automatic handling.
6. Leads at gauge plane .054 inch (1.37 mm) +.001 inch (0.03 mm) -.000 inch (0.00 mm) below seating plane shall be within .007 inch (0.18 mm) radius of true position (TP) relative to tab. Device may be measured by direct methods or by gauge.
7. Symbol LD applies between L_1 and L_2. Dimension LD applies between L_2 and LL minimum. Lead diameter shall not exceed .042 inch (1.07 mm) within L_1 and beyond LL minimum.
8. Lead designation, shall be as follows: 1 - emitter, 2 - base, 3 - collector.
9. Lead number three is electrically connected to case.
10. Beyond r maximum, TW shall be held for a minimum length of .011 inch (0.28 mm).
11. Symbol r applied to both inside corners of tab.
12. For transistor types 2N3498, 2N3499, 2N3500, and 2N3501, LL = .50 inch (12.7 mm) minimum and .750 inch (19.1 mm) maximum. For transistor types 2N3498L, 2N3499L, 2N3500L, and 2N3501L, LL = 1.50 inches (38.1 mm) minimum and 1.750 inches (44.5 mm) maximum.
13. All three leads.
14. In accordance with ASME Y14.5M, diameters are equivalent to ϕx symbology.

FIGURE 1. Physical dimensions (similar to TO-5, TO-39).

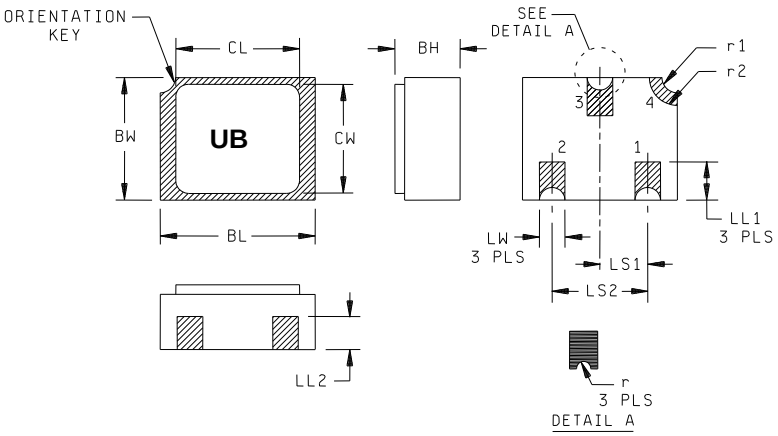

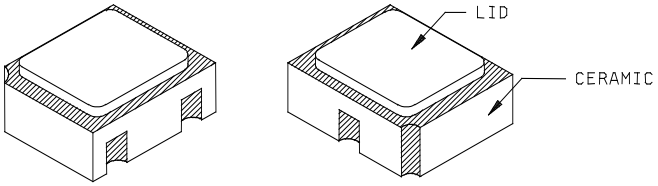

Symbol	Dimensions				Note
	Inches		Millimeters		
	Min	Max	Min	Max	
BH	.046	.056	1.17	1.42	
BL	.115	.128	2.92	3.25	
BW	.085	.108	2.16	2.74	
CL		.128		3.25	
CW		.108		2.74	
LL1	.022	.038	0.56	0.97	
LL2	.017	.035	0.43	0.89	

Symbol	Dimensions				Note
	Inches		Millimeters		
	Min	Max	Min	Max	
LS_1	.036	.040	0.91	1.02	
LS_2	.071	.079	1.80	2.01	
LW	.016	.024	0.41	0.61	
r		.008		.203	
r1		.012		.305	
r2		.022		.559	

NOTES:
1. Dimensions are in inches.
2. Millimeters are given for general information only.
3. Hatched areas on package denote metallized areas.
4. Lid material: Kovar.
5. Pad 1 = Base, Pad 2 = Emitter, Pad 3 = Collector, Pad 4 = Shielding connected to the lid.
6. In accordance with ASME Y14.5M, diameters are equivalent to ϕx symbology.

FIGURE 2. Physical dimensions, surface mount (2N3501UB version).

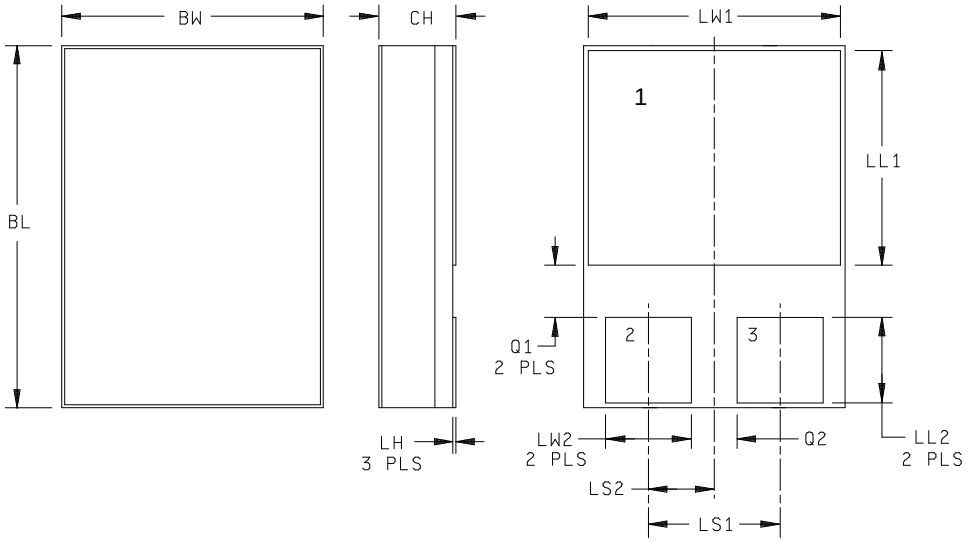

Symbol	Dimensions			
	Inches		Millimeters	
	Min	Max	Min	Max
BL	.215	.225	5.46	5.72
BW	.145	.155	3.68	3.94
CH	.049	.075	1.24	1.91
LH		.020		0.51
LW1	.135	.145	3.43	3.68
LW2	.047	.057	1.19	1.45
LL1	.085	.125	2.16	3.18
LL2	.045	.075	1.14	1.91
LS1	.070	.095	1.78	2.41
LS2	.035	.048	0.89	1.22
Q1	.030	.070	0.76	1.78
Q2	.020	.035	0.51	0.89
1	Collector			
2	Base			
3	Emitter			

NOTES:
1. Dimensions are in inches.
2. Millimeters are given for general information only.
3. Terminal 1 is collector.
4. Terminal 2 is base.
5. Terminal 3 is emitter.
6. In accordance with ASME Y14.5M, diameters are equivalent to ϕx symbology.

FIGURE 3. Physical dimensions and configuration U4.

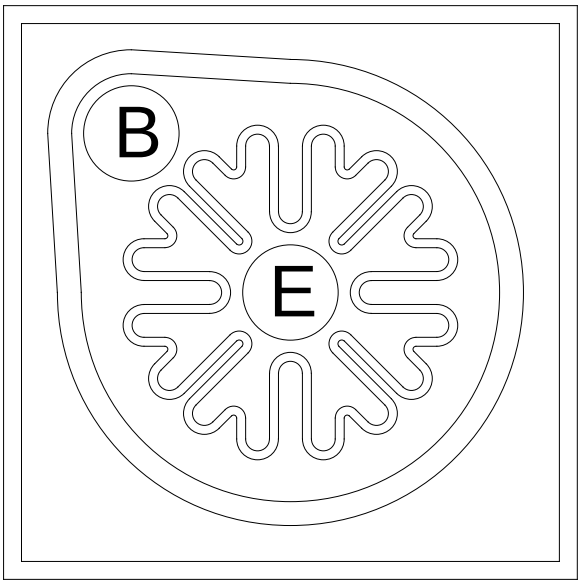

B - Version

1.	Die size	.030 (0.76 mm) x .030 inch (0.76 mm).
2.	Die thickness	.008 (.20 mm) ±.0016 inch (0.04 mm).
3.	Base pad	.005 inch (0.13 mm) diameter.
4.	Emitter pad	.005 inch (0.13 mm) diameter.
5.	Back metal	Gold, 6,500 ±1,950 Å.
6.	Top metal	Aluminum, 22,500 ±2,500 Å.
7.	Back side	Collector.
8.	Glassivation	SiO_2, 7,500 ±1,500 Å.

FIGURE 4. Physical dimensions, JANHCB and JANKCB die.

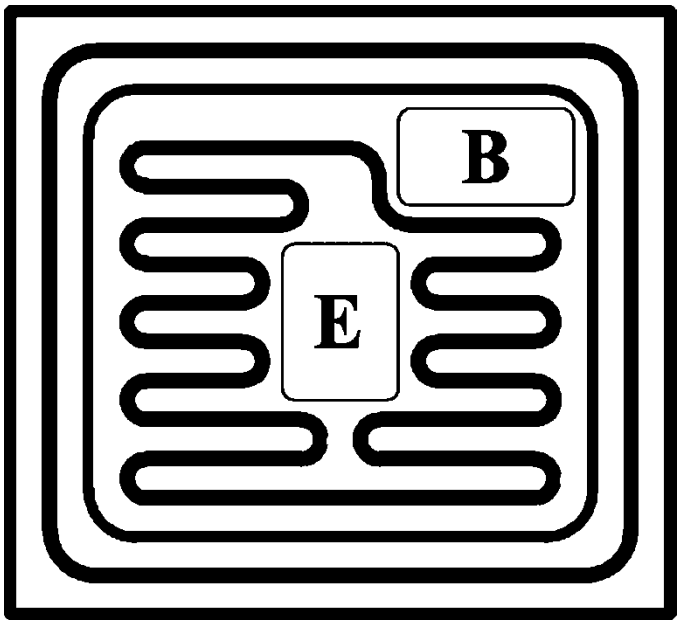

1. Chip size ..... .024 x .026 inch ±.002 inch (0.609 x 0.660 mm ±0.051 mm).
2. Chip thickness ..... .010 ±.0015 inch (0.254 x 0.038 mm).
3. Top metal..... Aluminum 15,000 nÅ minimum, 18,000Å nominal.
4. Back metal..... Gold 3,500Å minimum, 5,000Å nominal.
5. Backside ..... Collector.
6. Bonding pad..... B = .004 x .006 inch (0.102 x 0.152 mm).
   E = .004 x .0055 inch (0.102 x 0.140 mm).

FIGURE 5. Physical dimensions, JANHCC and JANKCC die.

* 1.5 Part or Identifying Number (PIN). The PIN is in accordance with MIL-PRF-19500, and as specified herein. See 6.5 for PIN construction example and 6.6 for a list of available PINs.

* 1.5.1 JAN certification mark and quality level for encapsulated devices. The quality level designators for encapsulated devices that are applicable for this specification sheet from the lowest to the highest level are as follows: “JAN”, “JANTX”, “JANTXV” and "JANS".

* 1.5.2 JAN certification mark and quality level for unencapsulated devices (die). The quality level designators for unencapsulated devices (die) that are applicable for this specification sheet from the lowest to the highest level are as follows: "JANHC" and "JANKC".

* 1.5.3 Radiation hardness assurance (RHA) designator. The RHA levels that are applicable for this specification sheet from lowest to highest are as follows: "M", "D", "P", "L", "R", "F", "G", and "H".

* 1.5.4 Device type. The designation system for the device types of transistors covered by this specification sheet are as follows.

* 1.5.4.1 First number and first letter symbols. The transistors of this specification sheet use the first number and letter symbols "2N".

* 1.5.4.2 Second number symbols. The second number symbols for the transistors covered by this specification sheet are as follows: "3498", "3499", “3500”, and "3501".

* 1.5.4.3 Suffix symbols. The suffix letter "L" is used on devices that are packaged in the TO-5 package of figure 1 that have a long lead length: 1.500 inches (38.10 mm) minimum and 1.750 inches (44.45 mm) maximum. Devices with standard length leads (see figure 1, TO-39) use no suffix. The suffix letters “UB” are used on device 2N3501 only that is packaged in the surface mount package of figure 2. The suffix letters “U4” are used on devices packaged in the surface mount package of figure 3.

* 1.5.5 Die identifiers for unencapsulated devices (manufacturers and critical interface identifiers). The manufacturer die identifiers that are applicable for this specification sheet are “B” and "C" and are in figures 4 and 5 respectively.

* 1.5.6 Lead finish. The lead finishes applicable to this specification sheet are listed on QPDSIS-19500.

2. APPLICABLE DOCUMENTS

* 2.1 General. The documents listed in this section are specified in sections 3 and 4 of this specification. This section does not include documents cited in other sections of this specification or recommended for additional information or as examples. While every effort has been made to ensure the completeness of this list, document users are cautioned that they must meet all specified requirements of documents cited in sections 3 and 4 of this specification, whether or not they are listed.

2.2 Government documents.

2.2.1 Specifications, standards, and handbooks. The following specifications, standards, and handbooks form a part of this document to the extent specified herein. Unless otherwise specified, the issues of these documents are those cited in the solicitation or contract.

DEPARTMENT OF DEFENSE SPECIFICATIONS

MIL-PRF-19500 - Semiconductor Devices, General Specification for.

DEPARTMENT OF DEFENSE STANDARDS

MIL-STD-750 - Test Methods for Semiconductor Devices.

* (Copies of these documents are available online at http://quicksearch.dla.mil/.)

2.3 Order of precedence. Unless otherwise noted herein or in the contract, in the event of a conflict between the text of this document and the references cited herein, the text of this document takes precedence. Nothing in this document, however, supersedes applicable laws and regulations unless a specific exemption has been obtained.

3. REQUIREMENTS

3.1 General. The individual item requirements shall be as specified in MIL-PRF-19500 and as modified herein.

3.2 Qualification. Devices furnished under this specification shall be products that are manufactured by a manufacturer authorized by the qualifying activity for listing on the applicable qualified manufacturers list before contract award (see 4.2 and 6.3).

3.3 Abbreviations, symbols, and definitions. Abbreviations, symbols, and definitions used herein shall be as specified in MIL-PRF-19500 and as follows.

PCB	Printed circuit board.
$R_{\theta JA}$	Thermal resistance junction to ambient.
$R_{\theta JC}$	Thermal resistance junction to case.
$R_{\theta JSP}$	Thermal resistance junction to solder pads.
TRB	Technical review board.
T_{SP}	Temperature of solder pads.
UB	Surface mount case outlines (see figure 2).

3.4 Interface and physical dimensions. Interface and physical dimensions shall be as specified in MIL-PRF-19500, and on figure 1 (similar to TO-5, TO-39), figure 2 (surface mount, 2N3501UB), figure 3 (U4), and figures 4 and 5 (die).

3.4.1 Lead finish. Lead finish shall be solderable in accordance with MIL-PRF-19500, MIL-STD-750, and herein. Where a choice of lead finish is desired, it shall be specified in the acquisition document (see 6.2).

3.5 Radiation hardness assurance (RHA). Radiation hardness assurance requirements, PIN designators, and test levels shall be as defined in MIL-PRF-19500.

3.6 Electrical performance characteristics. Unless otherwise specified herein, the electrical performance characteristics are as specified in 1.3, 1.4, and table I.

3.7 Electrical test requirements. The electrical test requirements shall be as specified in table I.

3.8 Marking. Marking shall be in accordance with MIL-PRF-19500.

3.9 Workmanship. Semiconductor devices shall be processed in such a manner as to be uniform in quality and shall be free from other defects that will affect life, serviceability, or appearance.

4. VERIFICATION

4.1 Classification of inspections. The inspection requirements specified herein are classified as follows:

a. Qualification inspection (see 4.2).

b. Screening (see 4.3).

c. Conformance inspection (see 4.4).

4.2 Qualification inspection. Qualification inspection shall be in accordance with MIL-PRF-19500 and as specified herein.

4.2.1 JANHC and JANKC qualification. JANHC and JANKC qualification inspection shall be in accordance with MIL-PRF-19500.

4.2.2 Group E qualification. Group E inspection shall be performed for qualification or re-qualification only. In case qualification was awarded to a prior revision of the specification sheet that did not request the performance of table III tests, the tests specified in table III herein that were not performed in the prior revision shall be performed on the first inspection lot of this revision to maintain qualification.

* 4.3 Screening.

* 4.3.1 Screening (JANS, JANTX, and JANTXV levels only). Screening of packaged devices shall be in accordance with table E-IV of MIL-PRF-19500, and as specified herein. The following measurements shall be made in accordance with table I herein. Devices that exceed the limits of table I herein shall not be acceptable.

Screen (see table E-IV of MIL-PRF-19500)	Measurement	
	JANS level	JANTX and JANTXV levels
(1) 3c	Thermal impedance method 3131 of MIL-STD-750, see figures 11, 12, 13, and 14, and 4.3.4	Thermal impedance method 3131 of MIL-STD-750, see figures 11, 12, 13, and 14, and 4.3.4
9	I_{CBO2} and h_{FE4}	Not applicable.
11	I_{CBO2} and h_{FE4}; ΔI_{CBO2} = 100 percent of initial value or 5 nA dc, whichever is greater; Δh_{FE4} = ±15 percent of initial value.	I_{CBO2} and h_{FE4}
12	See 4.3.3	See 4.3.3
13	Subgroups 2 and 3 of table I herein; ΔI_{CBO2} = 100 percent of initial value or 5 nA dc, whichever is greater; Δh_{FE4} = ±15 percent of initial value.	Subgroup 2 of table I herein; ΔI_{CBO2} = 100 percent of initial value or 5 nA dc, whichever is greater; Δh_{FE4} = ±15 percent of initial value.

(1) Shall be performed anytime after temperature cycling, screen 3a; JANTX and JANTXV levels do not need to be repeated in screening requirements.

* 4.3.2 Screening of unencapsulated die (JANHC and JANKC). Screening of JANHC and JANKC unencapsulated die shall be in accordance with appendix G of MIL-PRF-19500. Burn-in duration for the JANKC level follows JANS requirements; the JANHC follows JANTX requirements.

4.3.3 Power burn-in conditions. Power burn-in conditions are as follows: V_{CB} = 10 - 30 V dc; power shall be applied to achieve T_J = +135°C minimum using a minimum power dissipation = 75 percent of maximum rated P_T (see 1.3). NOTE: No heat sink or forced air-cooling on the devices shall be permitted. With approval of the qualifying activity and preparing activity, alternate burn-in criteria (hours, bias conditions, T_J, and mounting conditions) may be used. A justification demonstrating equivalence is required. In addition, the manufacturing site's burn-in data and performance history will be essential criteria for burn-in modification approval. Use method 3100 of MIL-STD-750 to measure T_J.

4.3.4 Thermal impedance. The thermal impedance measurements shall be performed in accordance with method 3131 of MIL-STD-750 using the guidelines in that method for determining I_M, I_H, t_H, t_{MD} (and V_C where appropriate). The thermal impedance limit shall comply with the thermal impedance graph in figures 11, 12, 13, and 14 (less than or equal to the curve value at the same t_H time) and shall be less than the process determined statistical maximum limit as outlined in method 3131 of MIL-STD-750. See table III group E, subgroup 4 herein.

4.4 Conformance inspection. Conformance inspection shall be in accordance with MIL-PRF-19500, and as specified herein. If alternate screening is being performed in accordance with MIL-PRF-19500, a sample of screened devices shall be submitted to and pass the requirements of subgroups 1 and 2 of table I herein, inspection only (table E-VIB, group B, subgroup 1 is not required to be performed again if group B has already been satisfied in accordance with 4.4.2).

4.4.1 Group A inspection. Group A inspection shall be conducted in accordance with MIL-PRF-19500 and table I herein.

* 4.4.2 Group B inspection. Group B inspection shall be conducted in accordance with the tests and conditions specified for subgroup testing in table E-VIA (JANS) of MIL-PRF-19500 and 4.4.2.1. Delta requirements shall be in accordance with 4.5.2 herein: and only apply to subgroups B4 and B5. See 4.4.2.2 for JAN, JANTX, and JANTXV group B testing. Electrical measurements (end-points) and delta requirements for JAN, JANTX, and JANTXV shall be after each step in 4.4.2.2 and shall be in accordance with table I, subgroup 2 and 4.5.2 herein.

4.4.2.1 Group B inspection (JANS), table E-VIA of MIL-PRF-19500.

Subgroup	Method	Condition
B4	1037	V_{CB} = 10 V dc.
B5	1027	V_{CB} = 10 V dc; $P_D \geq$ 100 percent of maximum rated P_T (see 1.3). (NOTE: If a failure occurs, resubmission shall be at the test conditions of the original sample.) Option 1: 96 hours minimum sample size in accordance with table E-VIA, of MIL-PRF-19500, adjust T_A or P_D to achieve T_J = +275°C minimum. Option 2: 216 hours minimum, sample size = 45, c = 0; adjust T_A or P_D to achieve a T_J = +225°C minimum.

4.4.2.2 Group B inspection, (JAN, JANTX, and JANTXV). Separate samples may be used for each step. In the event of a lot failure, the resubmission requirements of MIL-PRF-19500 shall apply. In addition, all catastrophic failures during CI shall be analyzed to the extent possible to identify root cause and corrective action. Whenever a failure is identified as wafer lot or wafer processing related, the entire wafer lot and related devices assembled from the wafer lot shall be rejected unless an appropriate determined corrective action to eliminate the failure~~s~~ mode has been implemented and the devices from the wafer lot are screened to eliminate the failure mode.

Step	Method	Condition
1	1026	Steady-state life: 1,000 hours minimum, V_{CB} = 10 V dc, power shall be applied to achieve T_J = +150°C minimum using a minimum of P_D = 75 percent of maximum rated P_T as defined in 1.3. n = 45 devices, c = 0. The sample size may be increased and the test time decreased as long as the devices are stressed for a total of 45,000 device hours minimum, and the actual time of test is at least 340 hours.
2	1048	Blocking life, T_A = +150°C, V_{CB} = 80 percent of rated voltage, 48 hours minimum. n = 45 devices, c = 0.
3	1032	High-temperature life (non-operating), t = 340 hours, T_A = +200°C. n = 22, c = 0.

4.4.2.3 Group B sample selection. Samples selected from group B inspection shall meet all of the following requirements:

a. For JAN, JANTX, and JANTXV samples shall be selected randomly from a minimum of three wafers (or from each wafer in the lot) from each wafer lot. For JANS, samples shall be selected from each inspection lot. See MIL-PRF-19500.

b. Shall be chosen from an inspection lot that has been submitted to and passed table I, subgroup 2, conformance inspection. When the final lead finish is solder or any plating prone to oxidation at high temperature, the samples for life test (subgroups B4 and B5 for JANS, and group B for JAN, JANTX, and JANTXV) may be pulled prior to the application of final lead finish.

* 4.4.3 Group C inspection. Group C inspection shall be conducted in accordance with the tests and conditions specified for subgroup testing in table E-VII of MIL-PRF-19500, and in 4.4.3.1 (JANS) and 4.4.3.2 (JAN, JANTX, and JANTXV) herein for group C testing. Delta measurements shall be in accordance with 4.5.2 herein.

4.4.3.1 Group C inspection (JANS), table E-VII of MIL-PRF-19500.

Subgroup	Method	Condition
C2	2036	Test condition E; (not applicable for UB and U4 devices).
C5	3131	$R_{\theta JA}$ and $R_{\theta JC}$ only, as applicable (see 1.3) and applied thermal impedance curves. See 4.3.4.
C6	1026	1,000 hours at V_{CB} = 10 V dc; power shall be applied to achieve T_J = +150°C minimum and a minimum of P_D = 75 percent of maximum rated P_T as defined in 1.3 n = 45, c = 0. The sample size may be increased and the test time decreased as long as the devices are stressed for a total of 45,000 device hours minimum, and the actual time of test is at least 340 hours.

4.4.3.2 Group C inspection (JAN, JANTX, and JANTXV), table E-VII of MIL-PRF-19500.

Subgroup	Method	Condition
C2	2036	Test condition E; not applicable for UB and U4 devices.
C5	3131	$R_{\theta JA}$ and $R_{\theta JC}$ only, as applicable (see 1.3 herein) n = 22, c = 0.
C6		Not applicable.

4.4.3.3 Group C sample selection. Samples for subgroups in group C shall be chosen at random from any inspection lot containing the intended package type and lead finish procured to the same specification which is submitted to and passes table I tests herein for conformance inspection. When the final lead finish is solder or any plating prone to oxidation at high temperature, the samples for C6 life test may be pulled prior to the application of final lead finish. Testing of a subgroup using a single device type enclosed in the intended package type shall be considered as complying with the requirements for that subgroup.

4.4.4 Group D inspection. Conformance inspection for hardness assured JANS, and JANKC types shall include the Group D tests specified in table II herein. These tests shall be performed as required in accordance with MIL-PRF-19500 and method 1019 of MIL-STD-750, for total ionizing dose, or method 1017 of MIL-STD-750 for neutron fluence, as applicable (see 6.2 herein), except Group D subgroup 2 may be performed separately from other subgroups. Alternate package options may also be substituted for the testing provided there is no adverse effect to the fluence profile.

* 4.4.5 Group E inspection. Group E inspection shall be conducted in accordance with the conditions specified for subgroup testing in table E-IX of MIL-PRF-19500 and as specified in table III herein. Delta measurements shall be in accordance with the applicable steps of 4.5.2.

4.5 Methods of inspection. Methods of inspection shall be as specified in the appropriate tables and as follows.

4.5.1 Pulse measurements. Conditions for pulse measurement shall be as specified in section 4 of MIL-STD-750.

4.5.2 Delta requirements. Delta requirements shall be as specified below: 1/ 2/ 3/

Step	Inspection 4/	MIL-STD-750		Symbol	Limit		Unit
		Method	Conditions		Min	Max	
1.	Collector to base cutoff current 2N3498, 2N3499 2N3500, 2N3501	3036	Bias condition D; V_{CB} = 50 V dc V_{CB} = 75 V dc	ΔI_{CBO2} 5/	±100 percent of initial value or 10 nA dc, whichever is greater.		
2.	Forward-current transfer ratio	3076	V_{CE} = 10 V dc; I_C = 10 mA dc; pulsed (see 4.5.1)	Δh_{FE3} 5/ 6/	±25 percent change from initial reading		
3.	Forward-current transfer ratio	3076	V_{CE} = 10 V dc; I_C = 150 mA dc; pulsed (see 4.5.1)	Δh_{FE4} 5/	±25 percent change from initial reading		
4.	Collector to emitter voltage (saturated)	3071	I_C = 10 mA dc; I_B = 1.0 mA dc; pulsed (see 4.5.1)	$\Delta V_{CE(sat)1}$ 5/ 6/ 7/	±50 mV dc change from previous measured value		

1/ The delta measurements for table E-VIA (JANS) of MIL-PRF-19500 are as follows:
   a. Subgroup 4, see 4.5.2 herein, steps 3 and 4.
   b. Subgroup 5, see 4.5.2 herein, steps 1 and 2.

2/ The delta measurements for group B, (see 4.4.2.2 herein, JAN, JANTX, and JANTXV) are as follows: After each step in 4.4.2.2, see 4.5.2 herein, steps 1 and 3.

3/ The delta measurements for table E-VII of MIL-PRF-19500 are as follows: Subgroup 6, see 4.5.2 herein, step 1 (for JANS only).

4/ Electrical characteristics for "L", “U4”, and "UB" suffix devices are identical to their corresponding "non-L", "non-U4" and "non-UB" suffix devices unless otherwise noted.

5/ Devices which exceed the table I limits shall not be returned to the lot, but will not be considered failures.

6/ JANS only.

7/ Maximum limit for this test characterized at ≤ .125 inch (3.18 mm) from the case.

* TABLE I. Group A inspection.

Inspection 1/ 2/	MIL-STD-750		Symbol	Limit		Unit
	Method	Conditions		Min	Max	
Subgroup 1 3/						
Visual and mechanical examination 4/	2071					
Solderability 4/ 5/	2026	n = 15 leads, c = 0				
Resistance to solvents 4/ 5/ 6/	1022	n = 15 devices, c = 0				
* Salt atmosphere (corrosion)	1041	n = 6 devices, c = 0				
Temp cycling 4/ 5/	1051	Test condition C, 25 cycles. n = 22 devices, c = 0				
Hermetic seal 5/ Fine leak Gross leak	1071	n = 22 devices, c = 0				
Electrical measurements 5/		Table I, subgroup 2				
Bond strength 4/ 5/	2037	Precondition T_A = +250°C at t = 24 hours or T_A = +300°C at t = 2 hours n = 11 wires, c = 0				
Decap internal visual (design verification) 4/	2075	n = 4 devices, c = 0				
Subgroup 2						
Thermal impedance	3131	See 4.3.4	$Z_{\theta JX}$			°C/W
Collector to base cutoff current	3036	Condition D,	I_{CBO1}			
2N3498, 2N3499		V_{CB} = 100 V dc			10	µA dc
2N3500, 2N3501, 2N3501UB		V_{CB} = 150 V dc			10	µA dc
Collector to emitter cutoff current	3041	Condition D; pulsed (see 4.5.1)	I_{CEO}			
2N3498, 2N3499		V_{CE} = 80 V dc			1	µA dc
2N3500, 2N3501, 2N3501UB		V_{CE} = 120 V dc			1	µA dc
Breakdown voltage, collector to emitter	3011	Bias condition D; I_C = 10 mA dc; pulsed (see 4.5.1)	$V_{(BR)CEO}$			
2N3498, 2N3499				100		V dc
2N3500, 2N3501, 2N3501UB				150		V dc
Emitter to base, cutoff current	3061	Bias condition D; V_{EB} = 6 V dc	I_{EBO1}		10	µA dc
Collector to base cutoff current	3036	Bias condition D;	I_{CBO2}			
2N3498, 2N3499		V_{CB} = 50 V dc			50	nA dc
2N3500, 2N3501, 2N3501UB		V_{CB} = 75 V dc			50	nA dc
Emitter to base cutoff current	3061	Bias condition D; V_{EB} = 4 V dc	I_{EBO2}		25	nA dc

See footnotes at end of table.

* TABLE I. Group A inspection - Continued.

Inspection 1/ 2/	MIL-STD-750		Symbol	Limit		Unit
	Method	Conditions		Min	Max	
Subgroup 2 - Continued						
Collector to emitter saturation voltage	3071	I_C = 10 mA dc; I_B = 1 mA dc; pulsed (see 4.5.1)	$V_{CE(sat)1}$		0.2	V dc
Collector to emitter saturation voltage	3071	I_C = 150 mA dc; I_B = 15 mA dc; pulsed (see 4.5.1)	$V_{CE(sat)2}$			
2N3500, 2N3501, 2N3501UB only					0.4	V dc
Collector to emitter saturation voltage	3071	I_C = 300 mA dc; I_B = 30 mA dc; pulsed (see 4.5.1)	$V_{CE(sat)3}$			
2N3498, 2N3499 only					0.6	V dc
Base emitter saturation voltage	3066	Test condition A; I_C = 10 mA dc; I_B = 1 mA dc; pulsed (see 4.5.1)	$V_{BE(sat)1}$		0.8	V dc
Base emitter saturation voltage (2N3500, 2N3501, 2N3501UB only)	3066	Test condition A; I_C = 150 mA dc; I_B = 15 mA dc; pulsed (see 4.5.1)	$V_{BE(sat)2}$		1.2	V dc
Base emitter saturation voltage (2N3498, 2N3499 only)	3066	Test condition A; I_C = 300 mA dc; I_B = 30 mA dc; pulsed (see 4.5.1)	$V_{BE(sat)3}$		1.4	V dc
Forward-current transfer ratio	3076	V_{CE} = 10 V dc; I_C = 0.1 mA dc; pulsed (see 4.5.1)	h_{FE1}			
2N3498, 2N3500				20		
2N3499, 2N3501, 2N3501UB				35		
Forward-current transfer ratio	3076	V_{CE} = 10 V dc; I_C = 1.0 mA dc; pulsed (see 4.5.1)	h_{FE2}			
2N3498, 2N3500				25		
2N3499, 2N3501, 2N3501UB				50		
Forward-current transfer ratio	3076	V_{CE} = 10 V dc; I_C = 10 mA dc; pulsed (see 4.5.1)	h_{FE3}			
2N3498, 2N3500				35		
2N3499, 2N3501, 2N3501UB				75		
Forward-current transfer ratio	3076	V_{CE} = 10 V dc; I_C = 150 mA dc; pulsed (see 4.5.1)	h_{FE4}			
2N3498, 2N3500				40	120	
2N3499, 2N3501, 2N3501UB				100	300	
Forward-current transfer ratio	3076	V_{CE} = 10 V dc; I_C = 300 mA dc; pulsed (see 4.5.1)	h_{FE5}			
2N3500				15		
2N3501, 2N3501UB				20		
Forward-current transfer ratio	3076	V_{CE} = 10 V dc; I_C = 500 mA dc; pulsed (see 4.5.1)	h_{FE6}			
2N3498				15		
2N3499				20		

See footnotes at end of table.

* TABLE I. Group A inspection - Continued.

Inspection 1/ 2/	MIL-STD-750		Symbol	Limit		Unit
	Method	Conditions		Min	Max	
Subgroup 3						
High temperature operation		T_A = +150°C				
Collector to base cutoff current 2N3498, 2N3499 2N3500, 2N3501, 2N3501UB	3036	Bias condition D V_{CB} = 50 V dc V_{CB} = 75 V dc	I_{CBO3}		50	µA dc
Low temperature operation		T_A = -55°C				
Forward-current transfer ratio 2N3498, 2N3500 2N3499, 2N3501, 2N3501UB	3076	V_{CE} = 10 V dc; I_C = 150 mA dc	h_{FE7}	 22 45		
Subgroup 4						
Magnitude of small-signal short- circuit forward current transfer ratio	3306	V_{CE} = 20 V dc; I_C = 20 mA dc; f = 100 MHz	$\|h_{fe}\|$	1.5	8	
Small-signal short-circuit forward current transfer ratio 2N3498, 2N3500 2N3499, 2N3501, 2N3501UB	3206	V_{CE} = 10 V dc; I_C = 10 mA dc; f = 1 kHz	h_{fe}	 35 75	 300 375	
Open circuit output capacitance 2N3498, 2N3499 2N3500, 2N3501, 2N3501UB	3236	V_{CB} = 10 V dc; I_E = 0; 100 kHz ≤ f ≤ 1 MHz	C_{obo}		 10 8	 pF pF
Input capacitance (output open-circuited)	3240	V_{EB} = 0.5 V dc; I_C = 0; 100 kHz ≤ f ≤ 1 MHz	C_{ibo}		80	pF
Noise figure (Test 1)	3246	V_{CE} = 10 V dc; I_C = 0.5 mA dc; R_g = 1 kΩ; f = 1 kHz	NF		16	dB
Noise figure (Test 2)	3246	V_{CE} = 10 V dc; I_C = 0.5 mA dc; R_g = 1 kΩ; f = 10 kHz	NF		6	dB
Turn-on time		V_{EB} = 5 V dc; I_C = 150 mA dc; I_{B1} = 15 mA dc; (see figure 15)	t_{on}		115	ns
Turn-off time		I_C = 150 mA dc, I_{B1} = I_{B2} = 15 mA dc; (see figure 15)	t_{off}		1150	ns

See footnotes at end of table.

* TABLE I. Group A inspection - Continued.

Inspection 1/ 2/	MIL-STD-750		Symbol	Limit		Unit
	Method	Conditions		Min	Max	
Subgroup 5						
Safe operating area (continuous dc)	3051	T_C = 25°C; $t_r \geq$ 10 ns; 1 cycle; (see figure 16); t = 1 s				
Test 1						
2N3498, 3N3499		V_{CE} = 10 V dc; I_C = 500 mA dc				
2N3500, 3N3501		V_{CE} = 16.67 V dc; I_C = 300 mA dc				
3N3501UB		V_{CE} = 10 V dc; I_C = 113 mA dc				
Test 2						
2N3498, 2N3499, 2N3500, 2N3501		V_{CE} = 50 V dc; I_C = 100 mA dc				
2N3501UB		V_{CE} = 50 V dc; I_C = 23 mA dc				
Test 3						
2N3498, 2N3499, 2N3500, 2N3501		V_{CE} = 80 V dc; I_C = 40 mA dc				
2N3501UB		V_{CE} = 80 V dc; I_C = 14 mA dc				
Safe operating area (clamped switching)	3053	T_A = +25°C; (see figure 17); device fails if clamp voltage is not reached				
2N3498, 2N3499		I_B = 85 mA dc; I_C = 500 mA dc				
2N3500, 2N3501, 2N3501UB		I_B = 50 mA dc; I_C = 300 mA dc				
Electrical measurements		See table I, subgroup 2 herein.				
Subgroup 6						
Not required						

1/ For sampling plan see MIL-PRF-19500, unless otherwise specified.
2/ Electrical characteristics for "L" and “U4” suffix devices are identical to the corresponding "non-L" and “non-U4” suffix devices.
3/ For resubmission of failed subgroup 1, double the sample size of the failed test or sequence of tests. A failure in table I, subgroup 1 shall not require retest of the entire subgroup. Only the failed test shall be rerun upon submission.
4/ Separate samples may be used.
5/ Not required for JANS devices.
6/ Not required for laser marked devices.

TABLE II. Group D inspection.

Inspection 1/ 2/ 3/	MIL-STD-750		Symbol	Limit		Unit
	Method	Conditions		Min	Max	
Subgroup 1 4/						
Neutron irradiation	1017	Neutron Exposure V_{CES} = 0V				
Collector to base cutoff current	3036	Condition D,	I_{CBO1}			
2N3498, 2N3499		V_{CB} = 100 V dc			20	µA dc
2N3500, 2N3501, 2N3501UB		V_{CB} = 150 V dc			20	µA dc
Collector to emitter cutoff current	3041	Condition D; pulsed (see 4.5.1)	I_{CEO}			
2N3498, 2N3499		V_{CE} = 80 V dc			2	µA dc
2N3500, 2N3501, 2N3501UB		V_{CE} = 120 V dc			2	µA dc
Breakdown voltage, collector to emitter	3011	Bias condition D; I_C = 10 mA dc; pulsed (see 4.5.1)	$V_{(BR)CEO}$			
2N3498, 2N3499				100		V dc
2N3500, 2N3501, 2N3501UB				150		V dc
Emitter to base, cutoff current	3061	Bias condition D; V_{EB} = 6 V dc	I_{EBO1}		20	µA dc
Collector to base cutoff current	3036	Bias condition D;	I_{CBO2}			
2N3498, 2N3499		V_{CB} = 50 V dc			100	nA dc
2N3500, 2N3501, 2N3501UB		V_{CB} = 75 V dc			100	nA dc
Emitter to base, cutoff current	3061	Bias condition D; V_{EB} = 4 V dc	I_{EBO2}		50	nA dc
Collector-emitter saturation voltage	3071	I_C = 10 mA dc; I_B = 1 mA dc; pulsed (see 4.5.1)	$V_{CE(sat)1}$		.23	V dc
Collector-emitter saturation voltage 2N3500, 2N3501 only	3071	I_C = 150 mA dc; I_B = 15 mA dc; pulsed (see 4.5.1)	$V_{CE(sat)2}$		.46	V dc
Collector-emitter saturation voltage 2N3498, 2N3499 only	3071	I_C = 300 mA dc; I_B = 30 mA dc; pulsed (see 4.5.1)	$V_{CE(sat)3}$		.69	V dc
Base emitter saturation voltage	3066	Test condition A; I_C = 10 mA dc; I_B = 1 mA dc; pulsed (see 4.5.1)	$V_{BE(sat)1}$		0.92	V dc
Base emitter saturation voltage (2N3500, 2N3501, 2N3501UB only)	3066	Test condition A; I_C = 150 mA dc; I_B = 15 mA dc; pulsed (see 4.5.1)	$V_{BE(sat)2}$		1.38	V dc
Base emitter saturation voltage (2N3498, 2N3499 only)	3066	Test condition A; I_C = 300 mA dc; I_B = 30 mA dc; pulsed (see 4.5.1)	$V_{BE(sat)3}$		1.61	V dc
Forward-current transfer ratio	3076	V_{CE} = 10 V dc; I_C = 0.1 mA dc pulsed (see 4.5.1)	[h_{FE1}] 5/			
2N3498, 2N3500				[10]		
2N3499, 2N3501				[17.5]		

See footnotes at end of table.

TABLE II. Group D inspection. - Continued.

Inspection 1/ 2/ 3/	MIL-STD-750		Symbol	Limit		Unit
	Method	Conditions		Min	Max	
Subgroup 1 4/ - Continued.						
Forward-current transfer ratio	3076	V_{CE} = 10 V dc; I_C = 1.0 mA dc pulsed (see 4.5.1)	[h_{FE2}] 5/			
2N3498, 2N3500				[12.5]		
2N3499, 2N3501				[25]		
Forward-current transfer ratio	3076	V_{CE} = 10 V dc; I_C = 10 mA dc pulsed (see 4.5.1)	[h_{FE3}] 5/			
2N3498, 2N3500				[17.5]		
2N3499, 2N3501				[37.5]		
Forward-current transfer ratio	3076	V_{CE} = 10 V dc; I_C = 150 mA dc pulsed (see 4.5.1)	[h_{FE4}] 5/			
2N3498, 2N3500				[20]	120	
2N3499, 2N3501				[50]	300	
Forward-current transfer ratio	3076	V_{CE} = 10 V dc; I_C = 300 mA dc, pulsed (see 4.5.1)	[h_{FE5}] 5/			
2N3500				[7.5]		
2N3501				[10]		
Forward-current transfer ratio	3076	V_{CE} = 10 V dc; I_C = 500 mA dc, pulsed (see 4.5.1)	[h_{FE6}] 5/			
2N3498				[7.5]		
2N3499				[10]		
Subgroup 2						
Total dose irradiation	1019	Gamma Exposure				
2N3498, 2N3499		V_{CES} = 80V				
2N3500, 2N3501		V_{CES} = 120V				
Collector to base cutoff current	3036	Condition D,	I_{CBO1}			
2N3498, 2N3499		V_{CB} = 100 V dc			20	µA dc
2N3500, 2N3501, 2N3501UB		V_{CB} = 150 V dc			20	µA dc
Collector to emitter cutoff current	3041	Condition D; pulsed (see 4.5.1)	I_{CEO}			
2N3498, 2N3499		V_{CE} = 80 V dc			2	µA dc
2N3500, 2N3501, 2N3501UB		V_{CE} = 120 V dc			2	µA dc
Breakdown voltage, collector to emitter	3011	Bias condition D; I_C = 10 mA dc; pulsed (see 4.5.1)	$V_{(BR)CEO}$			
2N3498, 2N3499				100		V dc
2N3500, 2N3501, 2N3501UB				150		V dc
Emitter to base, cutoff current	3061	Bias condition D; V_{EB} = 6 V dc	I_{EBO1}		20	µA dc
Collector to base cutoff current	3036	Bias condition D;	I_{CBO2}			
2N3498, 2N3499		V_{CB} = 50 V dc			100	nA dc
2N3500, 2N3501, 2N3501UB		V_{CB} = 75 V dc			100	nA dc

See footnotes at end of table.

TABLE II. Group D inspection. - Continued.

Inspection 1/ 2/ 3/	MIL-STD-750		Symbol	Limit		Unit
	Method	Conditions		Min	Max	
Subgroup 2 - Continued.						
Emitter to base cutoff current 2N3498, 2N3499 2N3500, 2N3501, 2N3501UB	3036	Bias condition D; V_{EB} = 4 V dc	I_{EBO2}		50	nA dc
Collector-emitter saturation voltage	3071	I_C = 10 mA dc; I_B = 1 mA dc; pulsed (see 4.5.1)	$V_{CE(sat)1}$		0.23	V dc
Collector-emitter saturation voltage 2N3500, 2N3501 only	3071	I_C = 150 mA dc; I_B = 15 mA dc; pulsed (see 4.5.1)	$V_{CE(sat)2}$		0..46	V dc
Collector-emitter saturation voltage 2N3498, 2N3499 only	3071	I_C = 300 mA dc; I_B = 30 mA dc; pulsed (see 4.5.1)	$V_{CE(sat)3}$		0..69	V dc
Base emitter saturation voltage	3066	Test condition A; I_C = 10 mA dc; I_B = 1 mA dc; pulsed (see 4.5.1)	$V_{BE(sat)1}$		0.92	V dc
Base emitter saturation voltage (2N3500, 2N3501, 2N3501UB only)	3066	Test condition A; I_C = 150 mA dc; I_B = 15 mA dc; pulsed (see 4.5.1)	$V_{BE(sat)2}$		1.38	V dc
Base emitter saturation voltage (2N3498, 2N3499 only)	3066	Test condition A; I_C = 300 mA dc; I_B = 30 mA dc; pulsed (see 4.5.1)	$V_{BE(sat)3}$		1.61	V dc
Forward-current transfer ratio 2N3498, 2N3500 2N3499, 2N3501	3076	V_{CE} = 10 V dc; IC = 0.1 mA dc, pulsed (see 4.5.1)	[h_{FE1}] 5/	 [10] [17.5]		
Forward-current transfer ratio 2N3498, 2N3500 2N3499, 2N3501	3076	V_{CE} = 10 V dc; IC = 1.0 mA dc, pulsed (see 4.5.1)	[h_{FE2}] 5/	 [12.5] [25]		
Forward-current transfer ratio 2N3498, 2N3500 2N3499, 2N3501	3076	V_{CE} = 10 V dc; IC = 10 mA dc, pulsed (see 4.5.1)	[h_{FE3}] 5/	 [17.5] [37.5]		
Forward-current transfer ratio 2N3498, 2N3500 2N3499, 2N3501	3076	V_{CE} = 10 V dc; IC = 150 mA dc, pulsed (see 4.5.1)	[h_{FE4}] 5/	 [20] [50]	 120 300	

See footnotes at end of table.

TABLE II. Group D inspection. - Continued.

Inspection 1/ 2/ 3/	MIL-STD-750		Symbol	Limit		Unit
	Method	Conditions		Min	Max	
Subgroup 2 - Continued.						
Forward-current transfer ratio	3076	V_{CE} = 10 V dc; IC = 300 mA dc, pulsed (see 4.5.1)	[h_{FE5}] 5/			
2N3500				[7.5]		
2N3501				[10]		
Forward-current transfer ratio	3076	V_{CE} = 10 V dc; IC = 500 mA dc, pulsed (see 4.5.1)	[h_{FE6}] 5/			
2N3498				[7.5]		
2N3499				[10]		

1/ Tests to be performed on all devices receiving radiation exposure.
2/ For sampling plan, see MIL-PRF-19500.
3/ Electrical characteristics apply to all device types unless otherwise noted.
4/ Subgroup 1 is an optional test and must be specified on the purchasing contract when required.
5/ See method 1019, of MIL-STD-750 for how to determine [h_{FE}] by first calculating the delta($1/h_{FE}$) from the pre and post radiation h_{FE}. Notice that [h_{FE}] is not the same as h_{FE} and cannot be measured directly. The [h_{FE}] value can never exceed the pre-radiation minimum h_{FE} that it is based upon.

TABLE III. Group E inspection (all quality levels) - for qualification or re-qualification only.

Inspection	MIL-STD-750		Qualification
	Method	Conditions	
Subgroup 1			45 devices c = 0
Temperature cycling (air to air)	1051	Test condition C, 500 cycles.	
Hermetic seal	1071		
Fine leak Gross leak			
Electrical measurements		See table I, subgroup 2 and 4.5.2 herein.	
Subgroup 2			45 devices c = 0
Intermittent life	1037	Intermittent operation life: V_{CB} = 10 V dc, 6,000 cycles. Adjust device current, or power, to achieve a minimum ΔT_J of +100°C.	
Electrical measurements		See table I, subgroup 2 and 4.5.2 herein.	
Subgroup 4			
Thermal resistance	3131	$R_{\theta JA}$ is required once for qualification. $R_{\theta JC}$ is required once for qualification. $R_{\theta JSP}$ can be calculated but shall be measured once in the same package with a similar die size to confirm calculations (may apply to multiple specification sheets).	15 devices c = 0
Thermal impedance curves		See MIL-PRF-19500, table E-IX, group E, subgroup 4.	Sample size N/A
Subgroup 5			
Not applicable			
Subgroup 8			45 devices c = 0
Reverse stability	1033	Condition B.	

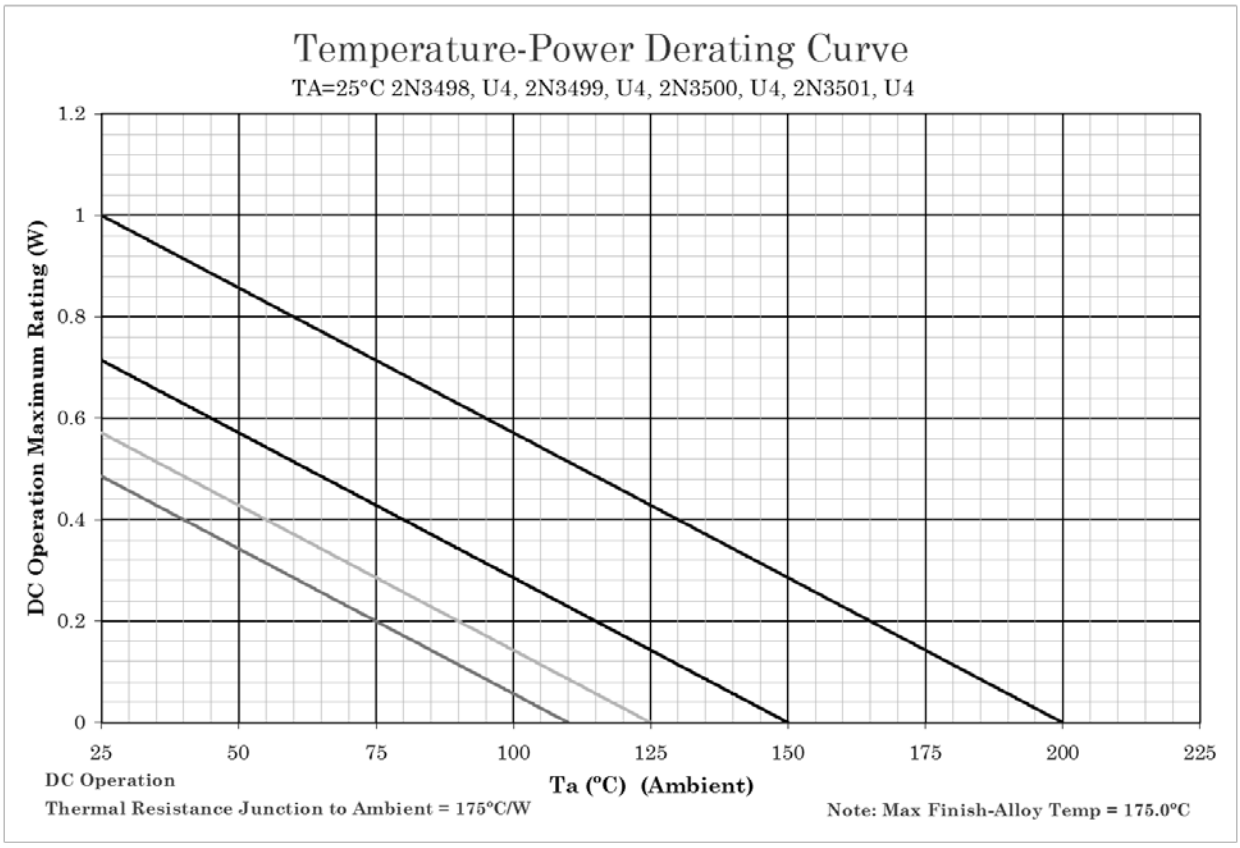

NOTES:

1. All devices are capable of operating at ≤ T_J specified on this curve. Any parallel line to this curve will intersect the appropriate power for the desired maximum T_J allowed.
2. Derate design curve constrained by the maximum junction temperature (T_J ≤ 200°C) and power rating specified. (See 1.3 herein.)
3. Derate design curve chosen at T_J ≤ 150°C, where the maximum temperature of electrical test is performed.
4. Derate design curves chosen at T_J ≤, 125°C, and 110°C to show power rating where most users want to limit T_J in their application.

FIGURE 6. Derating for all devices ($R_{\theta JA}$) for 2N3498, 2N3499, 2N3500, and 2N3501 type devices.

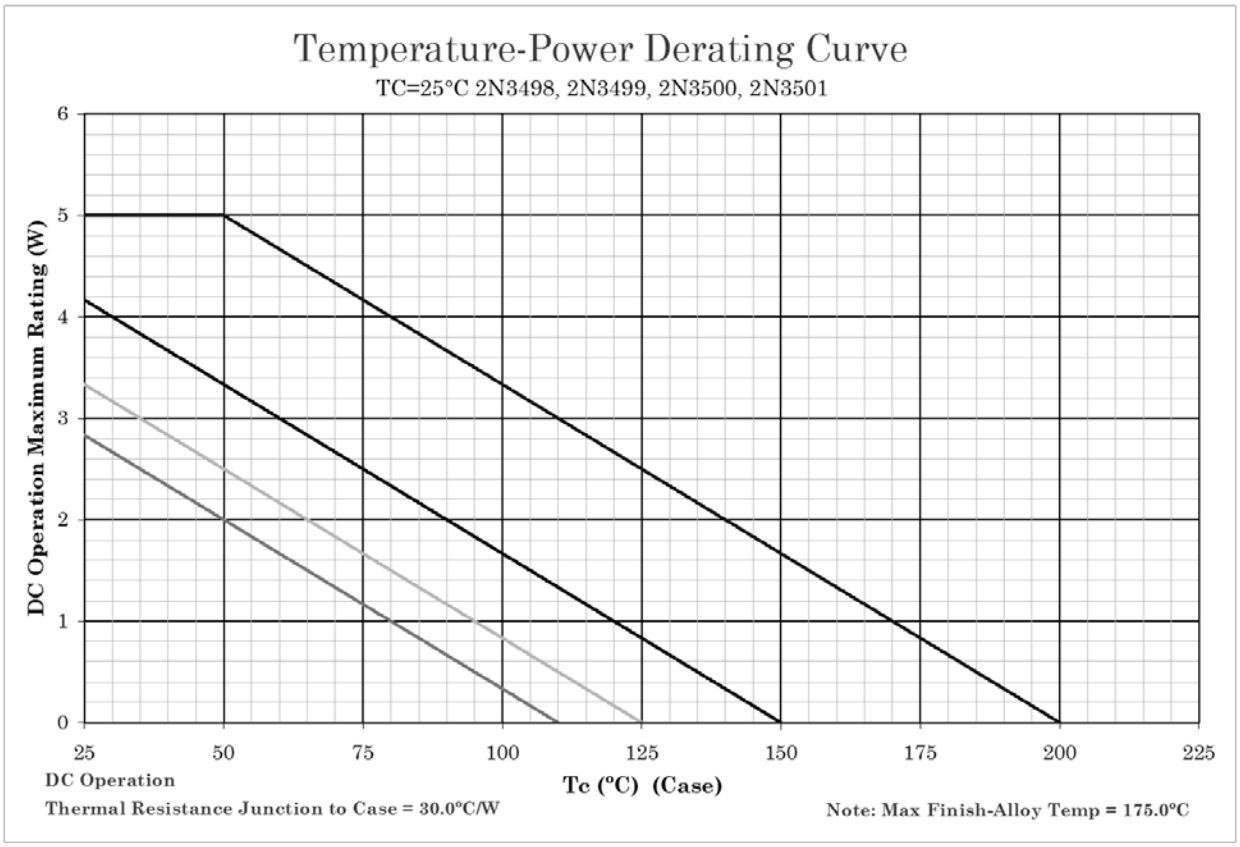

NOTES:

1. All devices are capable of operating at ≤ T_J specified on this curve. Any parallel line to this curve will intersect the appropriate power for the desired maximum T_J allowed.
2. Derate design curve constrained by the maximum junction temperature (T_J ≤ 200°C) and power rating specified. (See 1.3 herein.)
3. Derate design curve chosen at T_J ≤ 150°C, where the maximum temperature of electrical test is performed.
4. Derate design curves chosen at T_J ≤, 125°C, and 110°C to show power rating where most users want to limit T_J in their application.

FIGURE 7. Derating for all devices ($R_{\theta JC}$) for 2N3498, 2N3499, 2N3500, and 2N3501 type devices.

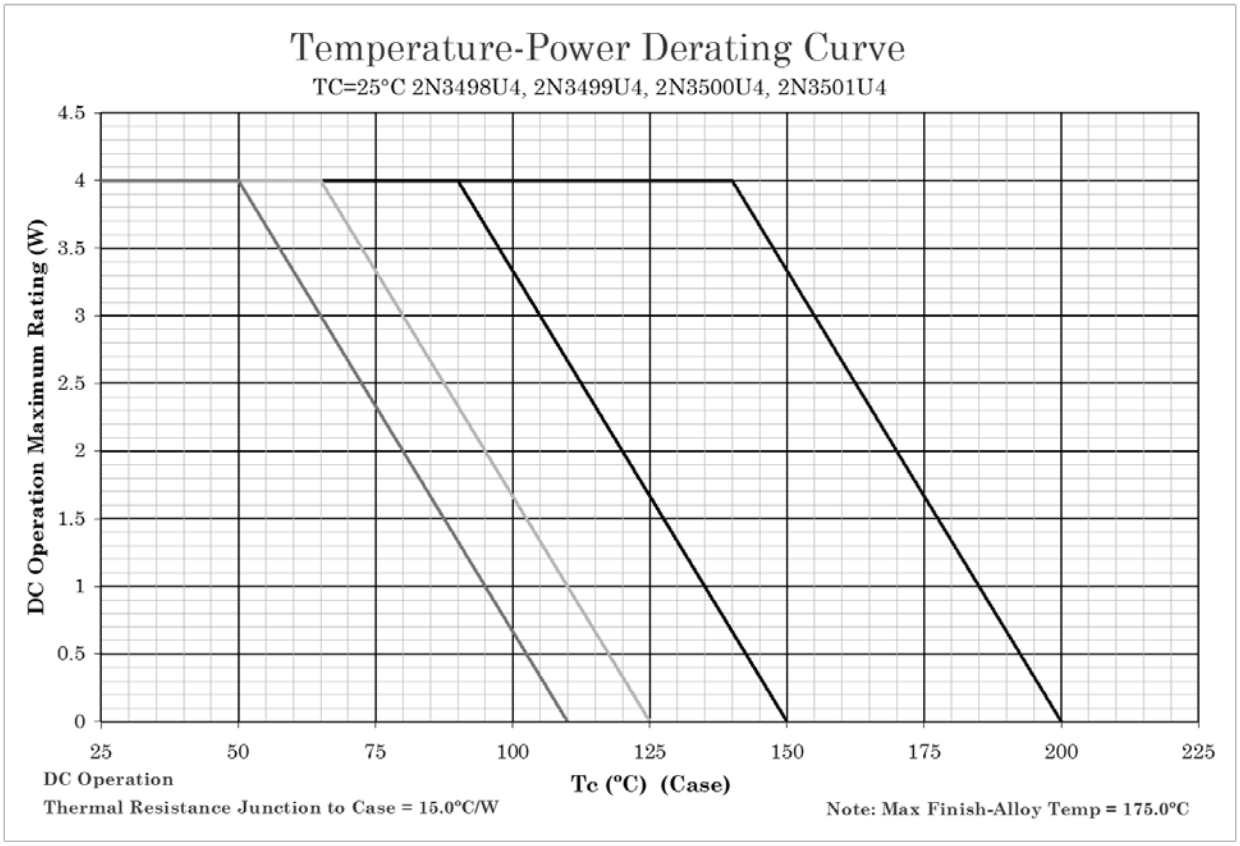

NOTES:

1. All devices are capable of operating at ≤ T_J specified on this curve. Any parallel line to this curve will intersect the appropriate power for the desired maximum T_J allowed.
2. Derate design curve constrained by the maximum junction temperature (T_J ≤ 200°C) and power rating specified. (See 1.3 herein.)
3. Derate design curve chosen at T_J ≤ 150°C, where the maximum temperature of electrical test is performed.
4. Derate design curves chosen at T_J ≤, 125°C, and 110°C to show power rating where most users want to limit T_J in their application.

FIGURE 8. Derating for all device ($R_{\theta JC}$) for 2N3498U4, 2N3499U4, 2N3500U4, and 2N3501U4 surface mount device.

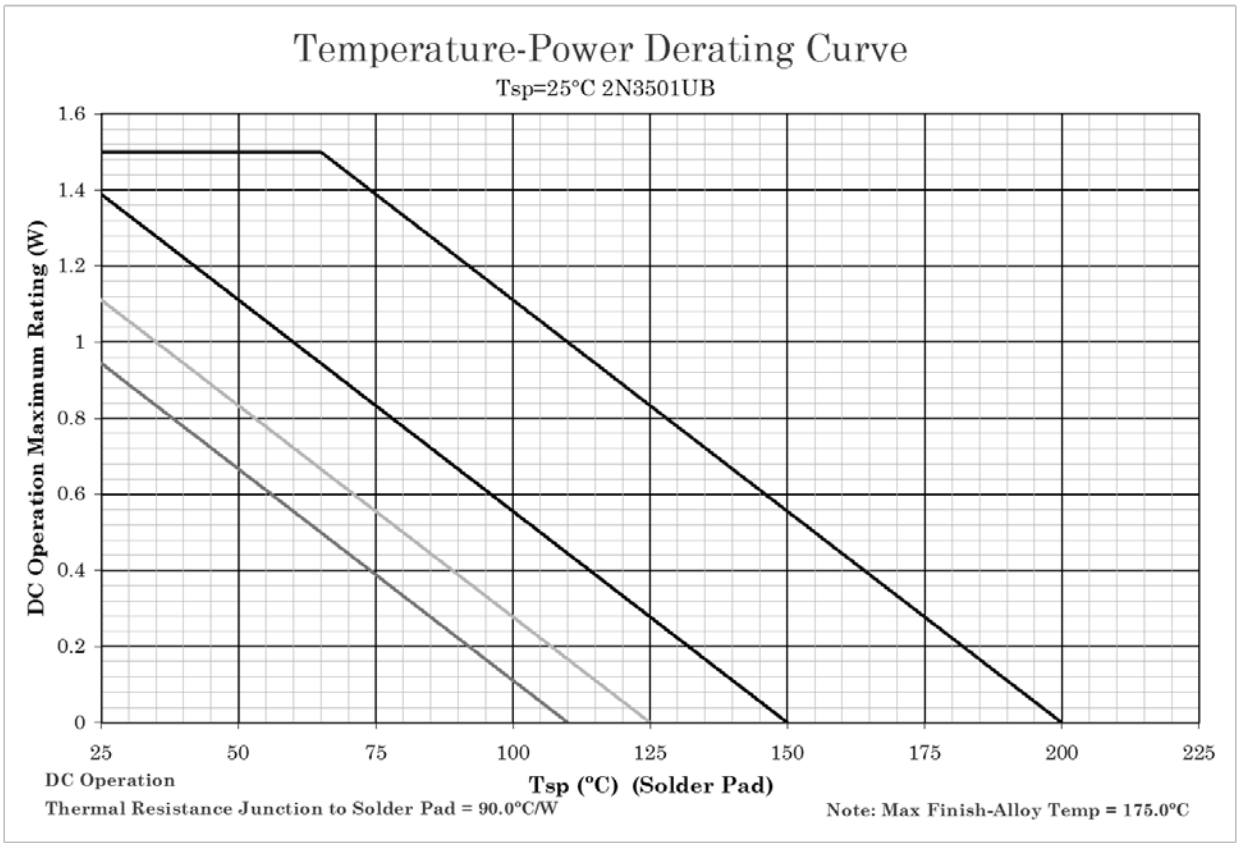

NOTES:

1. All devices are capable of operating at ≤ T_J specified on this curve. Any parallel line to this curve will intersect the appropriate power for the desired maximum T_J allowed.
2. Derate design curve constrained by the maximum junction temperature (T_J ≤ 200°C) and power rating specified. (See 1.3 herein.)
3. Derate design curve chosen at T_J ≤ 150°C, where the maximum temperature of electrical test is performed.
4. Derate design curves chosen at T_J ≤, 125°C, and 110°C to show power rating where most users want to limit T_J in their application.

FIGURE 9. Derating for all devices ($R_{\theta JSP}$) for 2N3501UB type devices.

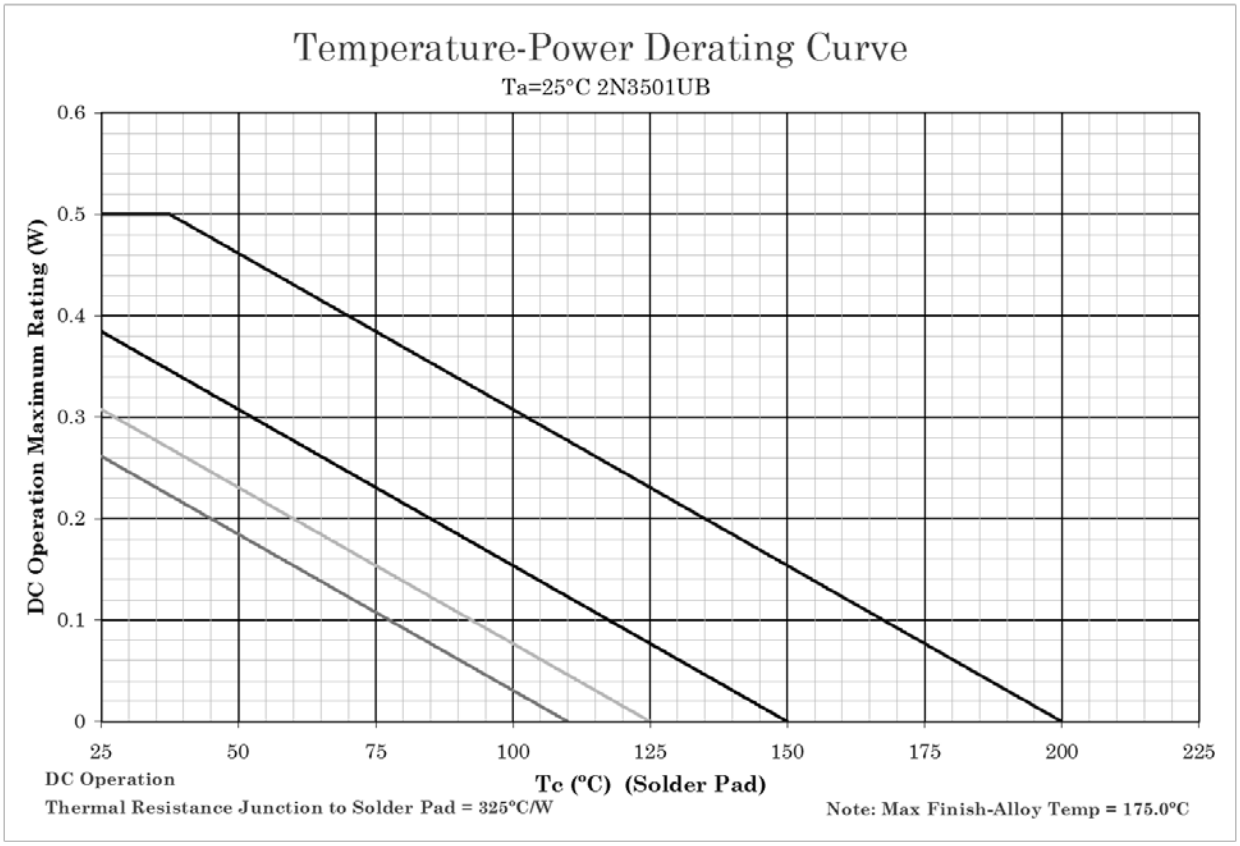

NOTES:

1. All devices are capable of operating at ≤ T_J specified on this curve. Any parallel line to this curve will intersect the appropriate power for the desired maximum T_J allowed.
2. Derate design curve constrained by the maximum junction temperature (T_J ≤ 200°C) and power rating specified. (See 1.3 herein.)
3. Derate design curve chosen at T_J ≤ 150°C, where the maximum temperature of electrical test is performed.
4. Derate design curves chosen at T_J ≤, 125°C, and 110°C to show power rating where most users want to limit T_J in their application.

FIGURE 10. Derating for all devices ($R_{\theta JA}$) for 2N3501UB type devices.

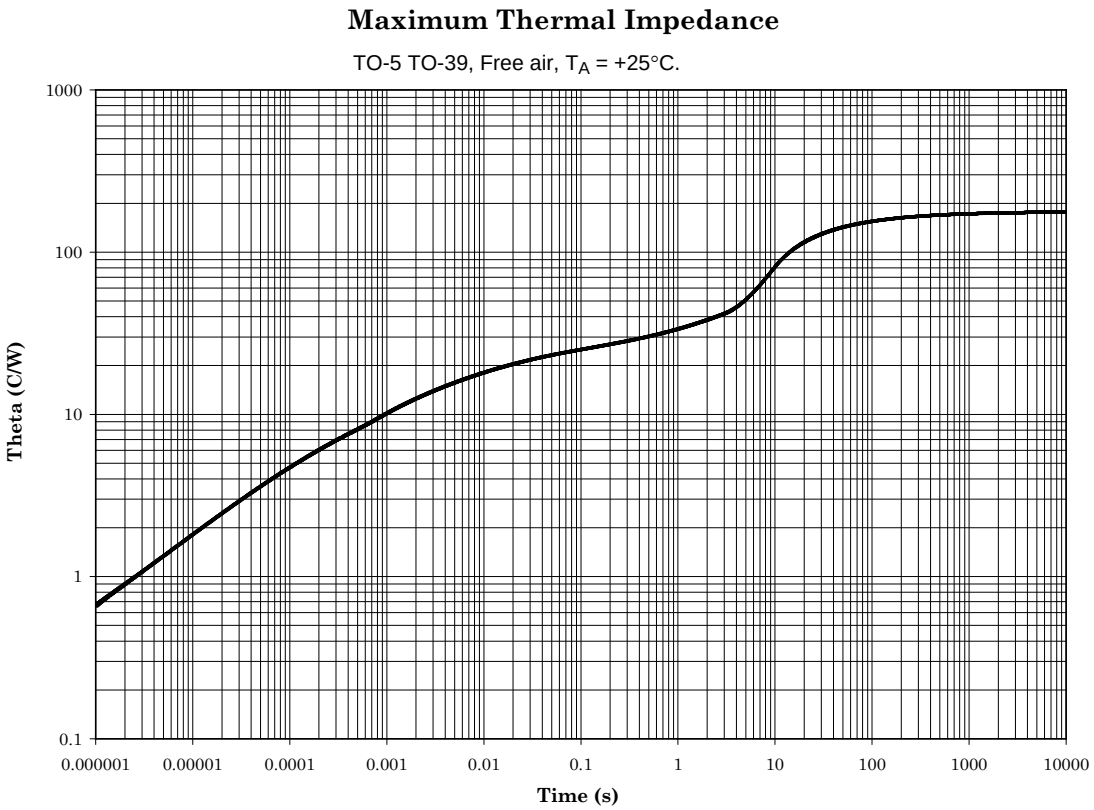

Resistance $R_{\theta JA}$ = 175°C/W.

FIGURE 11. Thermal impedance graph ($R_{\theta JA}$) for 2N3498, 2N3499, and 2N3500.

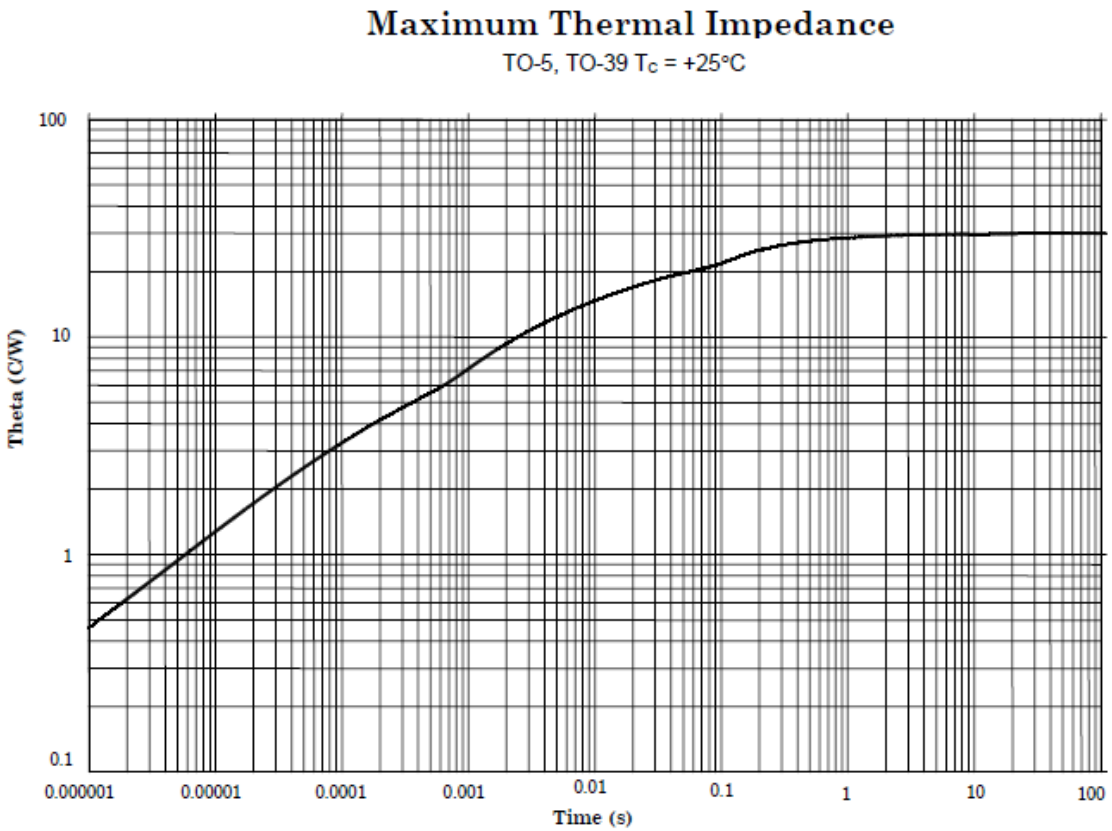

Thermal resistance $R_{\theta JC}$ = 30°C/W

FIGURE 12. Thermal impedance graph $R_{\theta JC}$ for 2N3498, 2N3499, 2N3500, 2N3501, and all L devices.

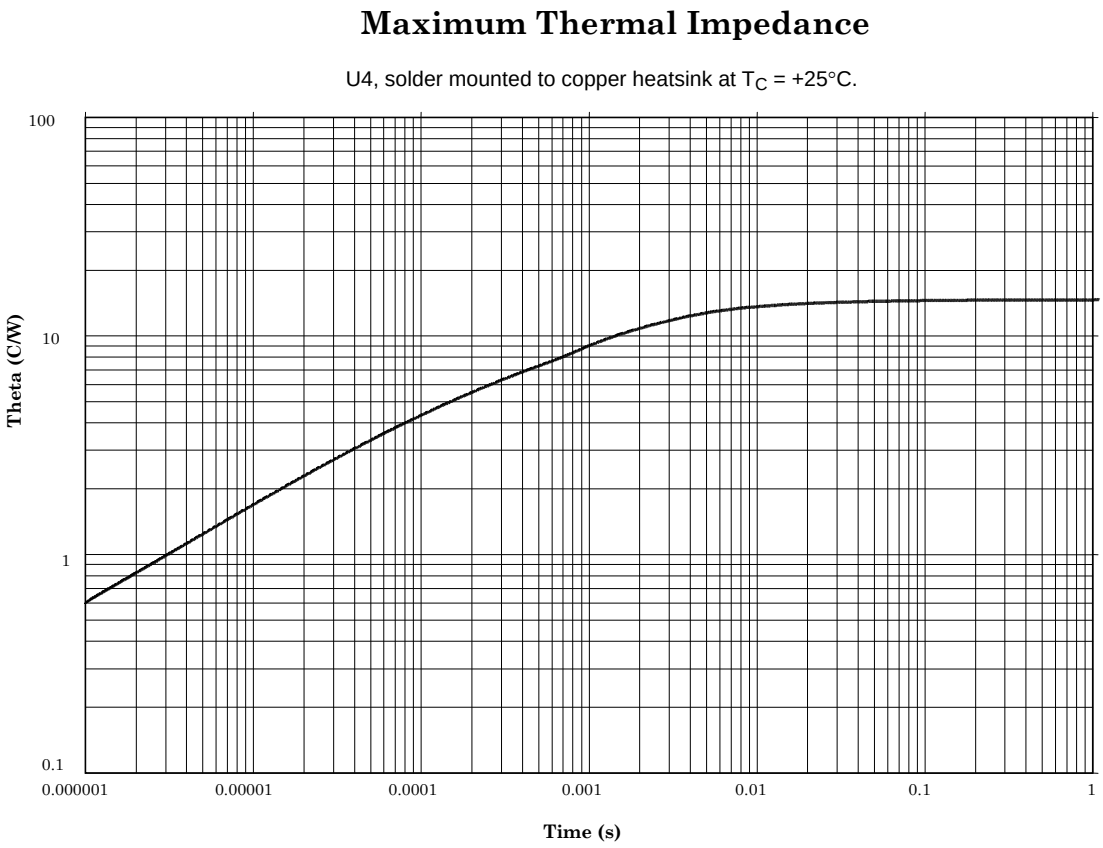

Thermal resistance $R_{\theta JC}$ = 15°C/W

FIGURE 13. Thermal impedance graph ($R_{\theta JC}$) for 2N3498U4, 2N3499U4, 2N3500U4, and 2N3501U4 (U4).

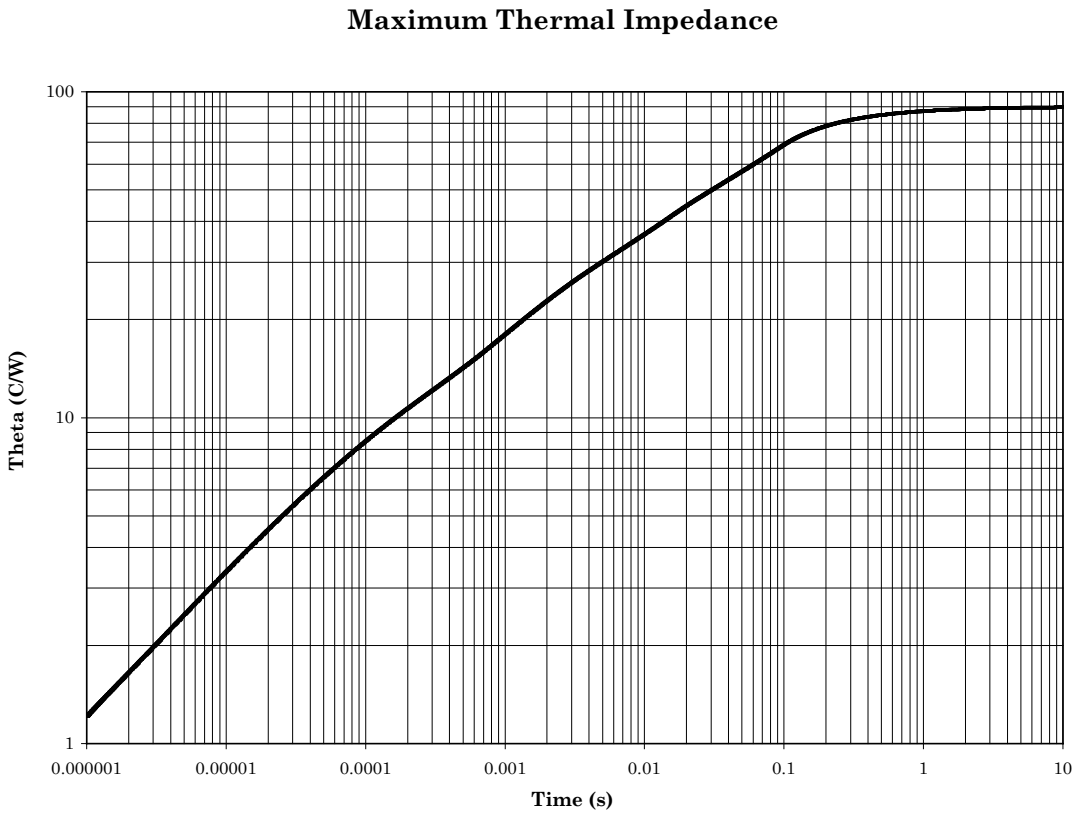

Thermal resistance $R_{\theta JSP}$ = 90°C/W

FIGURE 14. Thermal impedance graph ($R_{\theta JSP}$) for 2N3501UB (UB).

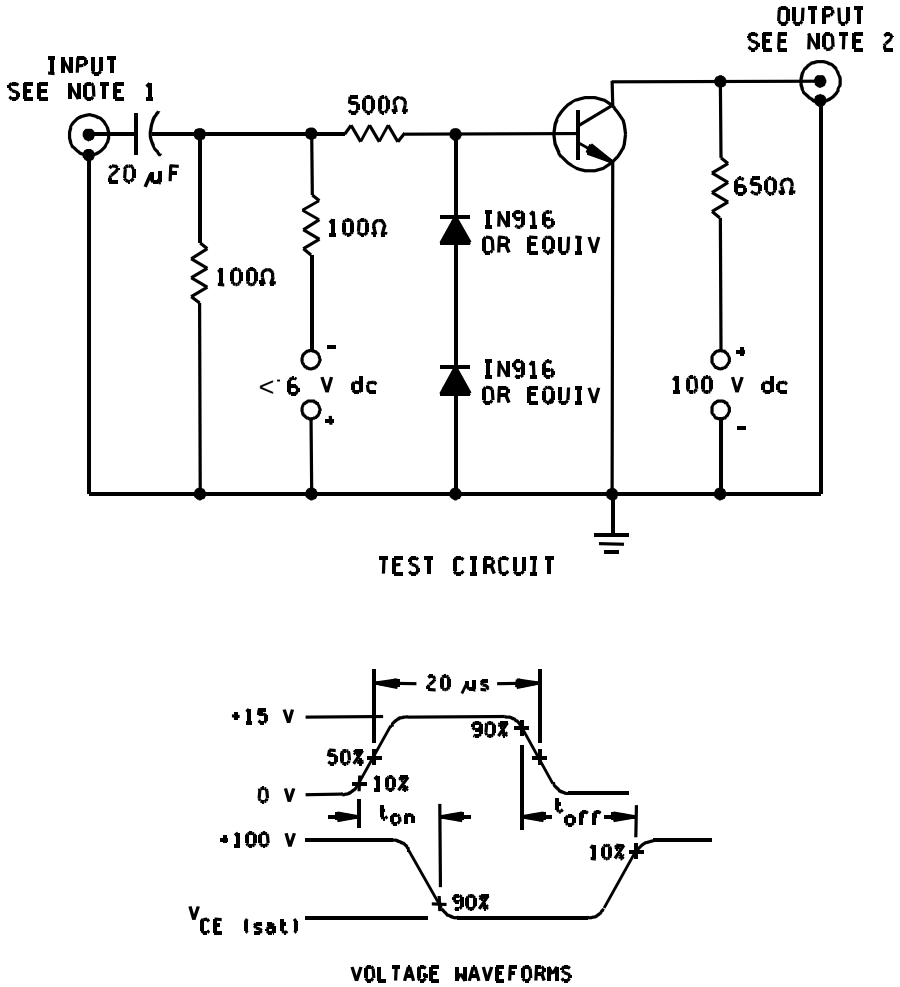

NOTES:

1. The input waveform is supplied by a pulse generator with the following characteristics: Pulse width = 20 μs, pulse repetition rate = 1 kHz, rise time (t_r) and fall time (t_f) ≤ 10 ns, duty cycle ≤ 2 percent.
2. The output waveform is monitored on a sampling oscilloscope with Z_{in} ≥ 1 ms and t_r ≤ 1 ns.

FIGURE 15. Turn-on, turn-off switching time test circuit.

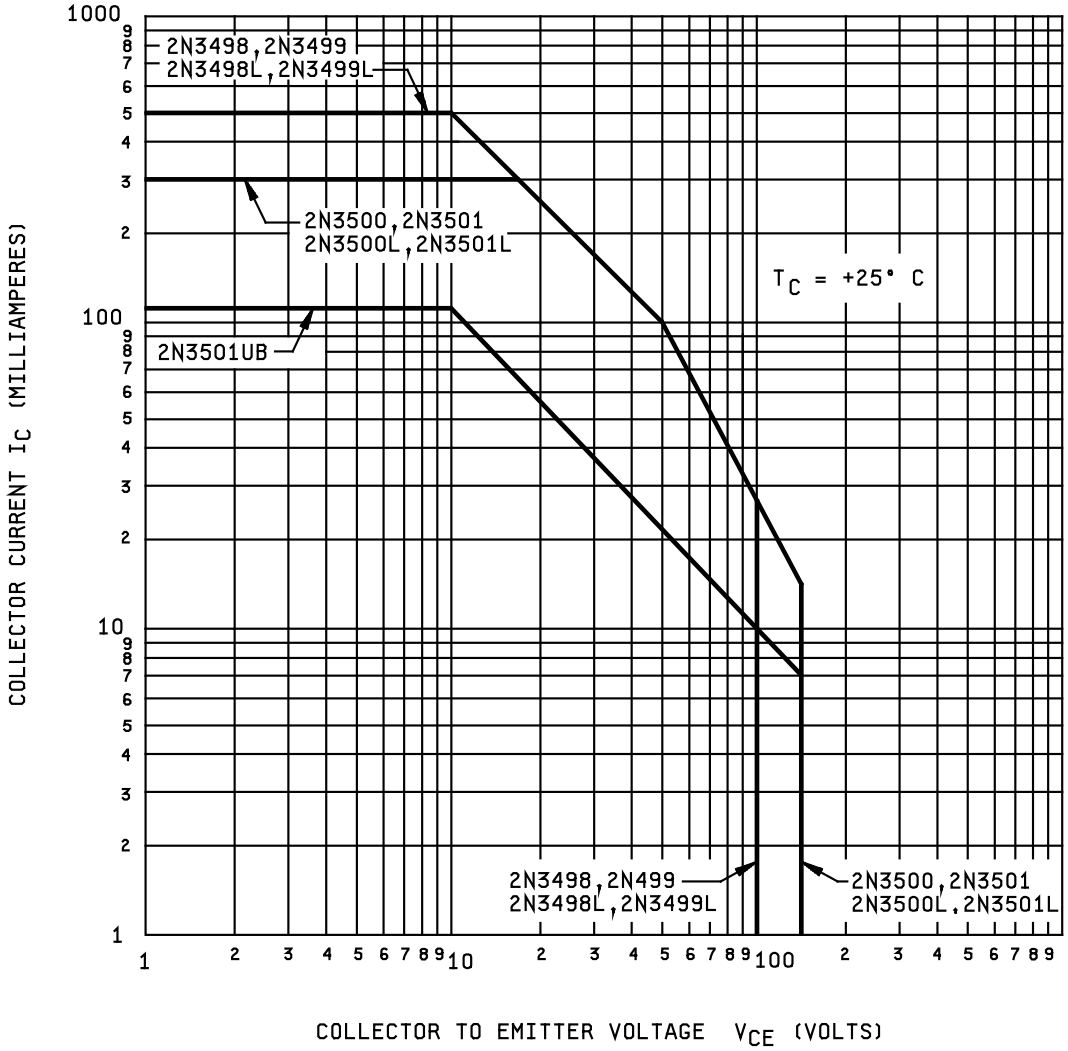

FIGURE 16. Maximum safe operating area.

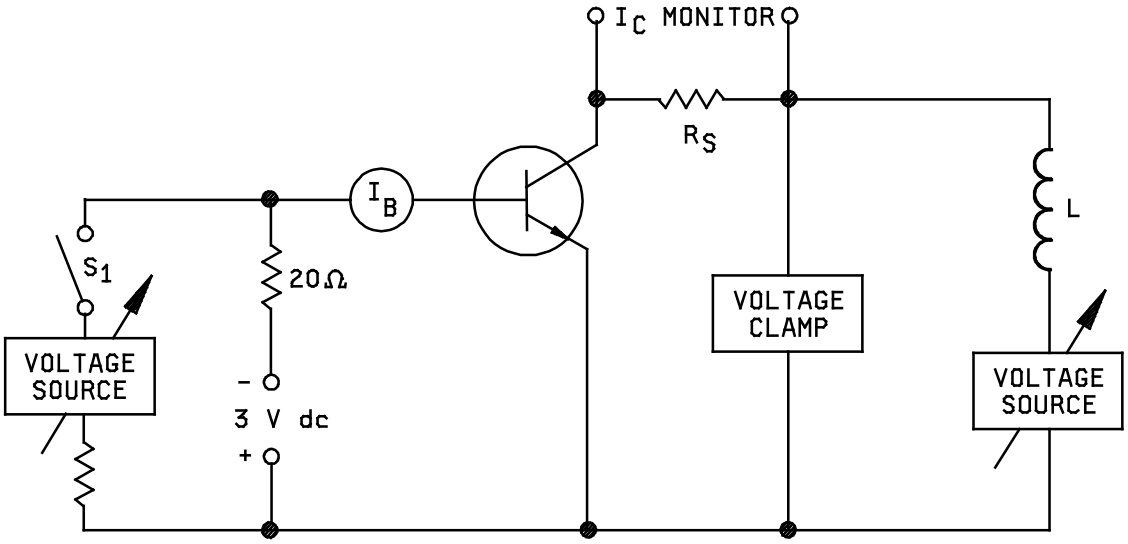

Voltage clamp:

2N3498, 2N3498L, 2N3499, 2N3499L = 100 V dc
2N3500, 2N3500L, 2N3501, 2N3501L, 2N3501UB = 150 V dc

$R_S \leq 1.0$ ohm (noninductive)
L = (STANCOR C-2688, 0.425 ohm, or equivalent)

Procedure:
1. With switch S_1 closed, set the specified test conditions.
2. Open S_1.
3. Perform specified end-point tests.

FIGURE 17. Clamped inductive sweep test circuit diagram.

5. PACKAGING

5.1 Packaging. For acquisition purposes, the packaging requirements shall be as specified in the contract or order (see 6.2). When packaging of materiel is to be performed by DoD or in-house contractor personnel, these personnel need to contact the responsible packaging activity to ascertain packaging requirements. Packaging requirements are maintained by the Inventory Control Point's packaging activities within the Military Service or Defense Agency, or within the Military Service's system commands. Packaging data retrieval is available from the managing Military Department's or Defense Agency's automated packaging files, CD-ROM products, or by contacting the responsible packaging activity.

6. NOTES

(This section contains information of a general or explanatory nature that may be helpful, but is not mandatory. The notes specified in MIL-PRF-19500 are applicable to this specification.)

6.1 Intended use. Semiconductors conforming to this specification are intended for original equipment design applications and logistic support of existing equipment.

* 6.2 Acquisition requirements. Acquisition documents should specify the following:

a. Title, number, and date of this specification.

b. Packaging requirements (see 5.1).

c. Lead finish (see 3.4.1).

* d. The complete Part or Identifying Number (PIN), see 1.5 and 6.5.

e. For acquisition of RHA designated devices, table II subgroup 1 testing of group D is optional. If subgroup 1 testing is desired, it must be specified in the contract.

6.3 Qualification. With respect to products requiring qualification, awards will be made only for products which are, at the time of award of contract, qualified for inclusion in Qualified Manufacturers List (QML 19500) whether or not such products have actually been so listed by that date. The attention of the contractors is called to these requirements, and manufacturers are urged to arrange to have the products that they propose to offer to the Federal Government tested for qualification in order that they may be eligible to be awarded contracts or orders for the products covered by this specification. Information pertaining to qualification of products may be obtained from DLA Land and Maritime, ATTN: VQE, P.O. Box 3990, Columbus, OH 43218-3990 or e-mail vqe.chief@dla.mil. An online listing of products qualified to this specification may be found in the Qualified Products Database (QPD) at https://assist.dla.mil .

6.4 Substitution information. The 2N3498, 2N3499, and 2N3500 devices (including L suffix versions) are now inactive for new design. The 2N3501 is the preferred item and is a direct substitute for the 2N3499, however, due to the higher gain of the 2N3501, it should be evaluated on a case by case basis before it is substituted for the 2N3498 and 2N3500.

* 6.5 PIN construction example.

* 6.5.1 PIN construction example for encapsulated devices. The PINs for encapsulated devices are construction using the following form.

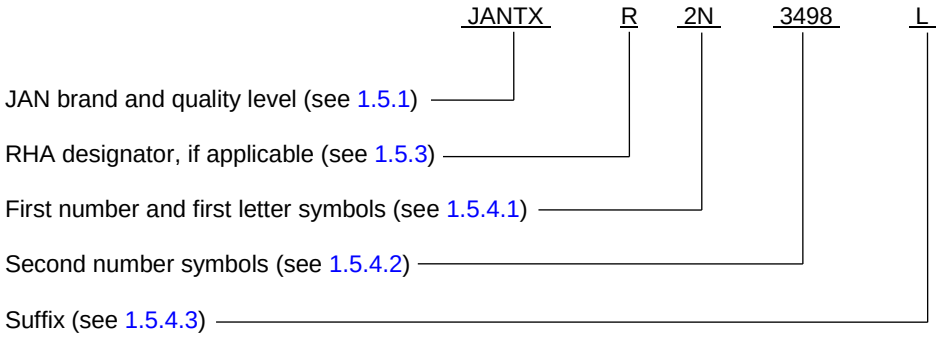

* 6.5.2 Unencapsulated devices. The PINs for un-encapsulated devices are constructed using the following form.

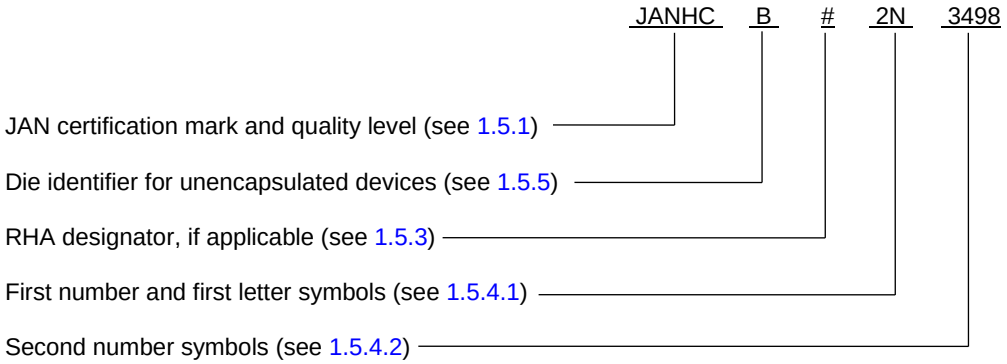

* 6.6 List of PINs.

* 6.6.1 List of PINs for encapsulated devices. The following is a list of possible PINs for encapsulated devices available on this specification sheet.

PINs for devices of the base quality level	PINs for devices of the "TX" quality level	PINs for devices of the "TXV" quality level (1)	PINs for devices of the "S" quality level (1)
JAN2N3498 (2)	JANTX2N3498 (2)	JANTXV#2N3498 (2)	JANS#2N3498 (2)
JAN2N3498L (2)	JANTX2N3498L (2)	JANTXV#2N3498L (2)	JANS#2N3498L (2)
JAN2N3498U4	JANTX2N3498U4	JANTXV#2N3498U4	JANS#2N3498U4
JAN2N3499 (2)	JANTX2N3499 (2)	JANTXV#2N3499 (2)	JANS#2N3499 (2)
JAN2N3499L (2)	JANTX2N3499L (2)	JANTXV#2N3499L (2)	JANS#2N3499L (2)
JAN2N3499U4	JANTX2N3499U4	JANTXV#2N3499U4	JANS#2N3499U4
JAN2N3500 (2)	JANTX2N3500 (2)	JANTXV#2N3500 (2)	JANS#2N3500 (2)
JAN2N3500L (2)	JANTX2N3500L (2)	JANTXV#2N3500L (2)	JANS#2N3500L (2)
JAN2N3500U4	JANTX2N3500U4	JANTXV#2N3500U4	JANS#2N3500U4
JAN2N3501	JANTX2N3501	JANTXV#2N3501	JANS#2N3501
JAN2N3501L	JANTX2N3501L	JANTXV#2N3501L	JANS#2N3501L
JAN2N3501UB	JANTX2N3501UB	JANTXV#2N3501UB	JANS#2N3501UB
JAN2N3501U4	JANTX2N3501U4	JANTXV#2N3501U4	JANS#2N3501U4

(1) The number sign (#) represent one of eight RHA designators available (M, D, P, L, R, F, G, or H) if desired. Remove for no RHA.
(2) Inactive for new design.

* 6.6.2 List of PINs for unencapsulated devices. The following is a list of possible PINs for unencapsulated devices available on this specification sheet. The qualified JANHC and JANKC suppliers with the applicable letter version (example JANHCA2N3500 will be identified on the QML.

JANHC AND JANKC ordering information		
PIN	Manufacturer	
	43611	34156
2N3498	JANHCC#2N3498 JANKCC#2N3498	JANHCB2N3498 JANKCB2N3498
2N3499	JANHCC#2N3499 JANKCC#2N3499	JANHCB2N3499 JANKCB2N3499
2N3500	JANHCC#2N3500 JANKCC#2N3500	JANHCB2N3500 JANKCB2N3500
2N3501	JANHCC#2N3501 JANKCC#2N3501	JANHCB2N3501 JANKCB2N3501

(1) The number sign (#) represent the RHA designators available "M", "D", "P", "L", "R", "F", "G", and "H" if desired. Remove for no RHA.

6.7 Changes from previous issue. The margins of this specification are marked with asterisks to indicate where changes from the previous issue were made. This was done as a convenience only and the Government assumes no liability whatsoever for any inaccuracies in these notations. Bidders and contractors are cautioned to evaluate the requirements of this document based on the entire content irrespective of the marginal notations and relationship to the last previous issue.

Custodians:
Army - CR
Navy - EC
Air Force - 85
DLA - CC

Review activities:
Army - AR, MI, SM
Navy - AS, MC
Air Force - 19, 99

Preparing activity:
DLA - CC

(Project 5961-2015-040)

NOTE: The activities listed above were interested in this document as of the date of this document. Since organizations and responsibilities can change, you should verify the currency of the information above using the ASSIST Online database at https://assist.dla.mil.