INCH-POUND

MIL-S-19500/584
25 July 1990

MILITARY SPECIFICATION

SEMICONDUCTOR DEVICE, RF POWER TRANSISTOR, NPN, SILICON, PUSH-PULL
TYPES JANTX, JANTXV, AND JANS, 2N6985 AND 2N6986

This specification is approved for use by all Departments and Agencies of the Department of Defense.

1. SCOPE

1.1 Scope. This specification covers the detail requirements for a NPN, silicon, push-pull RF power transistor. Three levels of product assurance are provided for each device type as specified in MIL-S-19500.

1.2 Physical dimensions. See figure 1.

1.3 Maximum ratings.

P_T		V_{CBO}	V_{CEO}	V_{EBO}	I_C	T_{stg}	T_J
T_C = 25°C 1/	T_C = 25°C 2/						
W	W	V dc	V dc	V dc	A dc	°C	°C
135	270	60	30	4	16	-65 to +200	+200

1/ Derate linearly 0.77 W/°C for T_C > 25°C (one section).
2/ Derate linearly 1.54 W/°C for T_C > 25°C (both sections).

1.4 Primary electrical characteristics.

$V_{CE(sat)}$ 1/ 2/		C_{obo}	h_{FE}	G_{PE} 3/	G_{PE} 3/
Limits	I_C = 5 A dc I_B = 2 A dc	I_E = 0 V_{CB} = 28 V f = 1 MHz	V_{CE} = 5 V 1/ I_C = 1 A	V_{CC} = 28 V f = 400 MHz P_{out} = 125 W	V_{CC} = 28 V f = 500 MHz P_{out} = 100 W
	V dc	pF		2N6985 dB	2N6986 dB
Min	---	---	20	8.0	7.5
Max	2.2	115	100	---	---

1/ Pulsed (see 4.5.1).
2/ Each side.
3/ See 6.2 for typical power output versus frequency.

Beneficial comments (recommendations, additions, deletions) and any pertinent data which may be of use in improving this document should be addressed to: Commander, Defense Electronic Supply Supply Center, ATTN: DESC-ECT, 1507 Wilmington Pike, Dayton, OH 45444-5280 by using the self-addressed Standardization Document Improvement Proposal (DD Form 1426) appearing at the end of this document or by letter.

AMSC N/A FSC 5961

DISTRIBUTION STATEMENT A. Approved for public release; distribution is unlimited.

2. APPLICABLE DOCUMENTS

2.1 Government documents.

2.1.1 Specifications, standards, and handbooks. The following specifications, standards, and handbooks form a part of this document to the extent specified herein. Unless otherwise specified, the issues of these documents are those listed in the issue of the Department of Defense Index of Specifications and Standards (DODISS) and supplement thereto, cited in the solicitation.

SPECIFICATION

MILITARY

MIL-S-19500 - Semiconductor Devices, General Specification for.

STANDARD

MILITARY

MIL-STD-750 - Test Methods for Semiconductor Devices.

(Unless otherwise indicated, copies of federal and military specifications, standards, and handbooks are available from the Standardization Document Order Desk, Building 4D, 700 Robbins Avenue, Philadelphia, PA 19111-5094.)

2.2 Order of precedence. In the event of a conflict between the text of this document and the references cited herein (except for associated detail specifications, specification sheets, or MS standards), the text of this document shall take precedence. Nothing in this document, however, supersedes applicable laws and regulations unless a specific exemption has been obtained.

3. REQUIREMENTS

3.1 Detail specification. The individual item requirements shall be in accordance with MIL-S-19500 and as specified herein.

3.2 Abbreviations, symbols, and definitions. Abbreviations, symbols, and definitions used herein shall be as specified in MIL-S-19500.

3.3 Design, construction, and physical dimensions. The design, construction, and physical dimensions shall be as specified in MIL-S-19500 and figure 1 herein.

3.3.1 Lead finish. Lead finish shall be solderable in accordance with MIL-S-19500, MIL-STD-750, and herein. Where a choice of lead material or finish is desired, it shall be specified in the contract or purchase order.

3.4 Marking. Marking shall be in accordance with MIL-S-19500 except at the option of the manufacturer, the following marking may be omitted from the body of the transistor:

a. Country of origin.

b. Manufacturer's identification.

4. QUALITY ASSURANCE PROVISIONS

4.1 Sampling and inspection. Sampling and inspection shall be in accordance with MIL-S-19500 and as specified herein.

4.2 Qualification inspection. Qualification inspection shall be in accordance with MIL-S-19500, and as specified herein (see 4.3.2 herein).

4.3 Screening (JANS, JANTX, and JANTXV levels only). Screening shall be in accordance with MIL-S-19500 (table II) and as specified herein. The following measurements shall be made in accordance with table I herein. Devices that exceed the limits of table I herein shall not be acceptable.

Screen (see table II) of MIL-S-19500)	Measurement	
	JANS level	JANTX and JANTXV levels
1/	See 4.3.2	See 4.3.2
9	I_{CBO}, h_{FE}	I_{CBO}, h_{FE}
11	ΔI_{CBO} = 100% of initial value or 150 µA, whichever is greater; Δh_{FE} = +25%; Subgroup 2 of table I herein.	ΔI_{CBO} = 100% of initial value or 150 µA, whichever is greater; Δh_{FE} = ±25%; Subgroup 2 of table I herein.
12	See 4.3.1	See 4.3.1
13	ΔI_{CBO} = 100% of initial value or 150 µA, whichever is greater; Δh_{FE} = ±25%; Subgroup 2 of table I herein.	ΔI_{CBO} = 150% of initial value or 100 µA, whichever is greater; Δh_{FE} = ±25%; Subgroup 2 of table I herein.

1/ Shall be performed anytime before screen 10.

4.3.1 Power burn-in conditions. Power burn-in conditions are as follows:

$V_{CB} \geq 10$ V; $R_{\theta JC}$ = +0.65°C/W (both sections).
T_J = +187.5°C ±12.5°C (see 4.5.3).
T_A = +30°C ±5°C.

4.3.2 Thermal response (ΔV_{BE} measurements). The ΔV_{BE} measurements shall be performed using Tesec ΔV_{BE} tester, model number 8114/8115 or equivalent. The following measurement conditions shall apply. The delta V_{BE} conditions and maximum V_{BE} limit shall be derived by each vendor and the read and record mesurements shall be submitted in the qualification report. Read and record all ΔV_{BE} measurements and conditions for each device in the qualification lot. In addition, the qualification report shall include a thermal response curve. The chosen ΔV_{BE} values shall be considered final after the manufacturer has had the opportunity to test five consecutive lots.

a. All test conditions ±5%.

b. V_{CE} = 20 V.

c. I_C = 5 amps.

d. Heating pulsewidth = 400 ms.

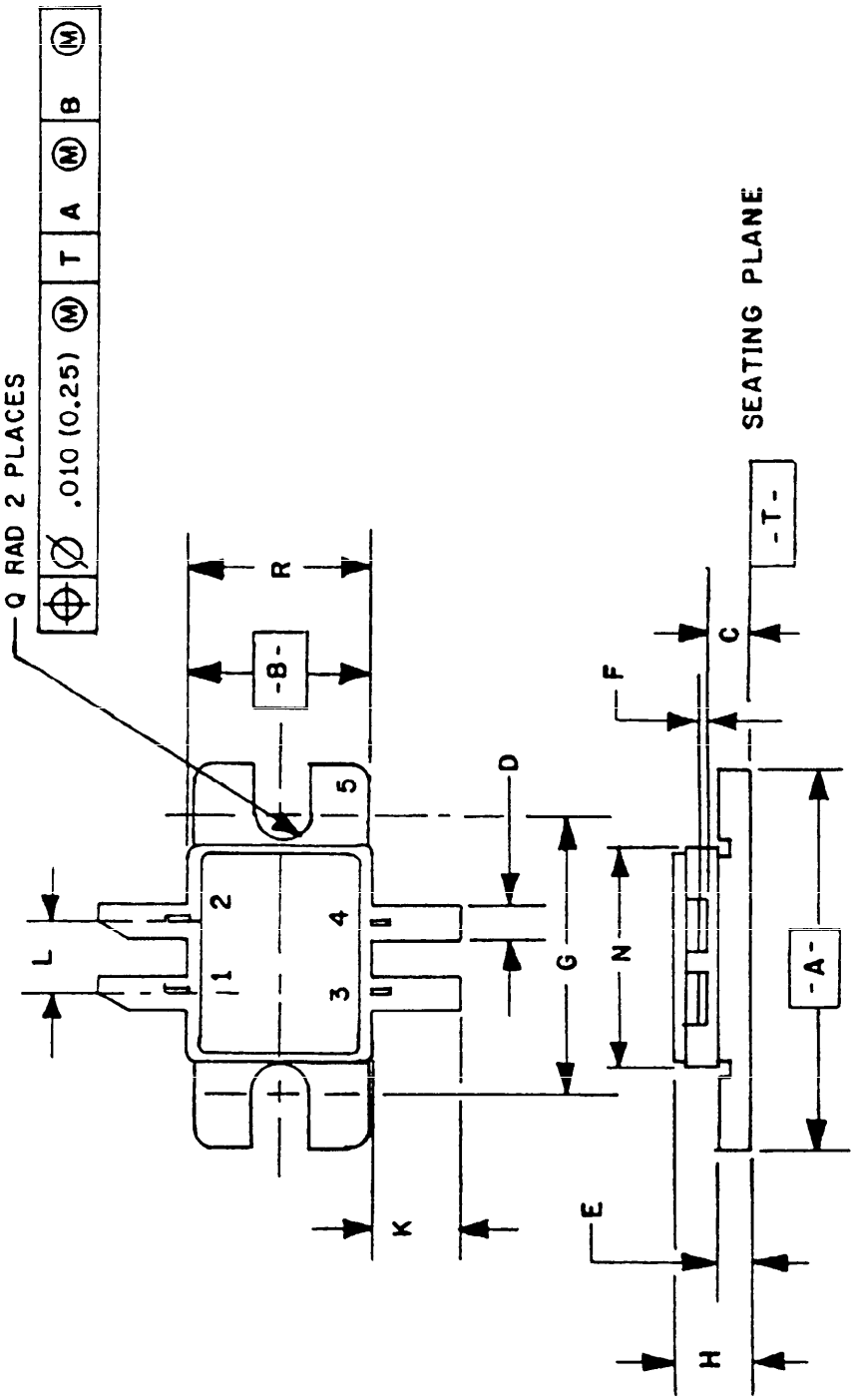

FIGURE 1. Dimensions and configuration.

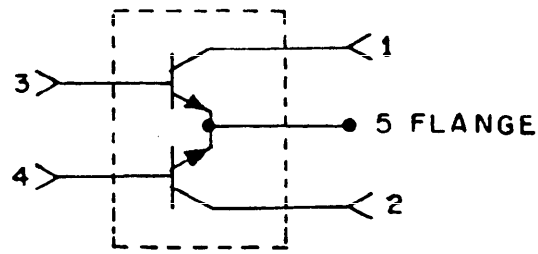

STYLE 1

STYLE 1:
PIN 1. COLLECTOR
2. COLLECTOR
3. BASE
4. BASE
5. EMITTER

SCHEMATIC DIAGRAM

Dimensions				
Ltr	Inches		Millimeters	
	Min	Max	Min	Max
A	.890	.910	22.61	23.11
B	.370	.400	9.40	10.16
C	.105	.135	2.67	3.43
D	.065	.085	1.65	2.16
E	.055	.065	1.40	1.65
F	.003	.006	0.08	0.15
G	.650	BSC	16.51	BSC
H	.150	.175	3.81	4.44
K	.190	.210	4.83	5.33
L	.155	.190	3.94	4.83
N	.490	.510	12.45	12.95
Q	.060	.070	1.52	1.78
R	.390	.410	9.91	10.41

NOTES:
1. Dimensions are in inches.
2. Metric equivalents are given for general information only.

FIGURE 1. Dimensions and configuration - Continued.

e. Measurement delay = 25 μs (after heating pulse).

f. Measurement current V_{BE} = 10 mA.

g. Test limits: V_{BE} (each side = 400 mV max. -side-to-side (1) V_{BE} = ±20%.
(1) Δ imbalance = (x-y/x) *100 Where x = larger V_{BE} reading
Y = smaller V_{BE} reading

4.4 Quality conformance inspection. Quality conformance inspection shall be in accordance with MIL-S-19500, and as specified herein.

4.4.1 Group A inspection. Group A inspection shall be conducted in accordance with MIL-S-19500 and table I herein. (End-point electrical measurements shall be in accordance with the applicable steps of table V herein).

4.4.2 Group B inspection. Group B inspection shall be conducted in accordance with the conditions specified for subgroup testing in table IVa (JANS) and table IVb (JANTX and JANTXV) of MIL-S-19500, and tables IIa and IIb herein. Electrical measurements (end-points) and delta requirements shall be in accordance with the applicable steps of table V herein.

4.4.3 Group C inspection. Group C inspection shall be conducted in accordance with the conditions specified for subgroup testing in table V of MIL-S-19500, and table III herein. Electrical measurements (end-points) and delta requirements shall be in accordance with the applicable steps of table V herein.

4.5 Methods of inspection. Methods of inspection shall be as specified in appropriate tables and as follows.

4.5.1 Pulse measurements. Conditions for pulse measurements shall be as specified in MIL-STD-750.

4.5.2 Testing of units. All specified electrical tests, including end-points tests, shall be performed equally on both sections of the transistor types covered herein, except where the electrical characteristic being evaluated applies to the transistor as a device entity.

4.5.3 Burn-in and operating life-test conditions. Power shall be applied to the device to achieve a junction temperature (T_J) of +187.5°C ±12.5°C.

T_J shall be determined as follows:

$T_J = P_D R_{\theta JC} + T_C$
$P_D = (V_{CE})(I_C)$
$R_{\theta JC}$ = +0.65°C/W both sections
T_C = measured value at hottest point on case

NOTE: For reference only. This test can be approximated by dissipating 4 watts at T_A = +25°C.

TABLE I. Group A inspection.

Inspection 1/	MIL-STD-750 Method	MIL-STD-750 Conditions	Symbol	Limits Min	Limits Max	Unit
Subgroup 1						
Visual and mechanical examination	2071					
Subgroup 2						
Breakdown voltage, collector to base	3001	Bias condition D I_C = 50 mA dc	$V_{(BR)CBO}$	60	---	V dc
Breakdown voltage, collector to emitter	3011	Bias condition D I_C = 50 mA dc Pulsed (see 4.5.1)	$V_{(BR)CEO}$	30	---	V dc
Breakdown voltage, collector to emitter	3011	Bias condition C I_C = 50 mA dc	$V_{(BR)CES}$	60	---	V dc
Collector to base cutoff current	3036	Bias condition D V_{CB} = 30 V dc, I_E = 0	I_{CBO}	---	1.5	mA
Emitter to base cutoff current	3061	Bias condition D V_{EB} = 4 V dc	I_{EBO}	---	5	mA
Collector to emitter voltage (saturated)	3071	I_C = 1 A dc I_B = 0.1 A dc Pulsed (see 4.5.1) (each section)	$V_{CE(sat)}$	---	2.2	V
Forward-current transfer ratio	3076	V_{CE} = 5 V dc I_C = 1 A dc, Pulsed (see 4.5.1)	h_{FE}	20	100	---
Forward-current transfer ratio (gain ratio)	3076	V_{CE} = 5 V dc I_C = 1 A dc Pulsed (see 4.5.1)	$\frac{h_{FE1}}{h_{FE2}}$	---	1.35	---
Power output test						
2N6985						
Electrical ruggedness		V_{CC} = 28 V dc f = 400 MHz P_{out} = 125 W Test circuit (see figure 2) 2/	λ	---	---	---
Output power		V_{CC} = 28 V dc f = 400 MHz P_{out} = 125 W Test circuit (see figure 2)	G_{PE}	8.0	---	dB
Collector efficiency		V_{CC} = 28 V dc f = 400 MHz P_{out} = 125 W Test circuit (see figure 2)	λ	50	---	%

See footnotes at end of table.

TABLE I. Group A inspection - Continued.

Inspection 1/	MIL-STD-750		Symbol	Limits		Unit
	Method	Conditions		Min	Max	
2N6986						
Electrical ruggedness		V_{CC} = 28 V dc f = 500 MHz P_{out} = 100 W Test circuit (see figure 3) 2/	λ	---	---	---
Output power		V_{CC} = 28 V dc f = 500 MHz P_{out} = 100 W Test circuit (see figure 3)	G_{PE}	7.5	---	dB
Collector efficiency		V_{CC} = 28 V dc f = 500 MHz P_{out} = 100 W Test circuit (see figure 3)	λ	50	---	%
Subgroup 3						
High-temperation operation:		T_A = +150°C				
Collector to base cutoff current	3036	Bias condition D V_{CB} = 30 V dc	I_{CBO}	---	50	mA
Low-temperature operation:		T_A = -55°C				
Forward-current transfer ratio	3076	V_{CE} = 5 V dc I_C = 1.0 A dc Pulsed (4.5.1)	h_{FE}	10	---	---
Subgroup 4						
Open circuit output capacitance	3236	V_{CB} = 28 V dc I_E = 0 f = 1 MHz (each section)	C_{obo}		115	pF
Subgroups 5 and 6						
Not applicable						

1/ For sampling plan, see MIL-S-19500.
2/ Devices circuit is switched to a load having a VSWR 30:1 and driven through all phase angles in a time interval not less than 3 seconds case temperature max 50°C. End-point test: Devices must meet power gain and collector efficiency test as specified above. This test also replaces the thermal response test.

MIL-M-38510/B(USAF)

TABLE IIa. Group B inspection for JANS devices.

Inspection 1/	MIL-STD-750	
	Method	Conditions
Subgroup 1		
Physical dimensions	2066	
Subgroup 2		
Solderability	2026	
Resistance to solvents	1022	
Subgroup 3		
Thermal shock (temperature cycling)	1051	
Hermetic seal a. Fine leak b. Gross leak	1071	
Electrical measurements		See table V, steps 1, 2, 3, and 4
Decap internal visual (design verification)	2075	1 device /0 failures each lot
Bond strength	2037	Test condition A; all internal leads for each device shall be pulled separately
Die shear (excluding axial leaded services)	2017	Only devices previously subjected to the bond strength test shall be used for this test.
Subgroup 4		
Not applicable		
Subgroup 5		
Accelerated steady-state operation life	1027	$V_{CB} \geq 10$ V dc $R_{\theta JC} = +0.65°C/W$ (both sections) $T_J = 187.5°C$ $\pm 12.5°C$ (see 4.5.3) Marking legibility requirements shall not apply.
Electrical measurements		See table V, all steps
Bond strenght (Al-Au die interconnects only)		
Subgroup 6		
Not applicable		

1/ For sampling plan, see MIL-S-19500.

TABLE IIb. Group B inspection for JANTX and JANTXV devices.

Inspection 1/	MIL-STD-750	
	Method	Conditions
Subgroup 1 2/		
Solderability	2026	
Resistance to solvents	1022	
Subgroup 2		
Thermal shock (temperature cycling)	1051	
Hermetic seal a. Fine leak b. Gross leak	1071	
Electrical measurements		See table V, steps 1, 2, 3, and 4
Subgroup 3		
Steady-state operation life	1027	$V_{CB} \geq 10$ V dc, $R_{\theta JC} = +0.65$ °C/W both sections, $T_J = 187.5$ °C ±12.5 °C (see 4.5.3)
Electrical measurements		See table V, all steps
Subgroup 4		
Decap internal visual (design verification)	2075	
Bond strength (wire or clip bonded)	2037	
Subgroup 5		
Not applicable		
Subgroup 6		
High-temperature life (nonoperating)	1032	$T_{stg} = +200$ °C t = 340 hours
Electrical measurements		See table V, all steps

1/ For sampling plan, see MIL-S-19500.
2/ Separate samples may be used for each test.

TABLE III. Group C inspection (all quality levels).

Inspection 1/	MIL-STD-750	
	Method	Conditions
Subgroup 1		
Physical dimensions	2066	
Subgroup 2		
Thermal shock (glass strain)		Not applicable
Terminal strength	2036	Test condition A W = 8 ±0.5 lbs t = 5 sec. min.
Hermetic seal a. Fine leak b. Gross leak	1071	
Moisture resistance	1021	
Electrical measurements		See table V, steps 1, 2, 3, and 4
Subgroup 3		
Shock	2016	
Vibration, variable frequency	2056	
Constant acceleration	2006	10,000 G's
Electrical measurements		See table V, steps 1, 2, 3, and 4
Subgroup 4		
Salt atmosphere (corrosion)	1041	
Subgroup 5		
Not applicable		
Subgroup 6		
Steady-state operation life	1027	$V_{CB} \geq 10$ V dc $R_{\theta JC}$ = +0.65°C/W (both sections) T_J = 187.5°C 12.5°C (see 4.5.3)
Electrical measurements		See table V, steps 1, 2, 3, 4, 5, 6, and 8

1/ For sampling plan, see MIL-S-19500.

TABLE IV. Group E inspection (all quality levels) for qualification only.

Inspection	MIL-STD-750		Qualification and large lot quality conformance inspection	Small lot quality conformance inspection n/c
	Method	Conditions		
Subgroup 1			10 devices, c = 0	4 devices, c = 0
Thermal shock (glass strain)	1056	0°C to 100°C, 100 cycles		
Electrical measurements		See table V, steps 1, 2, and 3		
Subgroup 2			10 devices, c = 0	4 devices, c = 0
Steady-state dc blocking life	1039 or 1049	Condition A; 1000 hours		
Electrical measurements		See table V, steps 1 and 4		
Subgroup 3			2 devices, c = 0	1 device, c = 0
DPA	2102			
Subgroup 4			6 devices, c = 0	3 devices, c = 0
Thermal resistance		$R_{\theta JC}$ = .65°C/W maximum per device (I_R scan will be used to verify $R_{\theta JC}$)		
Forward voltage drop (emitter to base diode method)		See 4.3.2		
Subgroup 5				
Not applicable				

TABLE V. Groups A, B, and C electrical measurements.

Step	Inspection	MIL-STD-750		Symbol	Limits		Unit
		Method	Conditions		Min	Max	
1	Breakdown to voltage collector to emitter	3011	Bias condition D, I_C = 50 mA dc Pulsed (see 4.5.1)	$V_{(BR)CEO}$	30	---	V dc
2	Collector cutoff current	3036	Bias condition D V_{CB} = 30 V dc I_E = 0	I_{CBO}	---	1.5	mA dc
3	Emitter to base cutoff current	3061	Bias condition D V_{EB} = 4 V dc	I_{EBO}	---	5	mA dc
4	Forward-current transfer ratio	3076	V_{CE} = 5 V dc I_C = 1 A dc Pulsed (see 4.5.1)	h_{FE}	20	100	---
5	Collector cutoff current	3036	Bias condition D V_{CB} = 30 V dc I_E = 0	ΔI_{CBO}	100% of initial value of 150 μA, which is greater.		
6	Foward-current transfer ratio	3076	V_{CE} = 5 V dc I_C = 1 A dc Pulsed (see 4.5.1)	Δh_{FE}	25% subgroup 2 of table I herein.		
7	Output power		V_{CC} = 28 V dc				
	2N6895		f = 400 MHz P_{out} = 125 W Test circuit (see figure 2)	G_{PE}	8.0	---	dB
	2N6896		f = 500 MHz P_{out} = 100 W Test circuit (see figure 3)	G_{PE}	7.5	---	dB
8	Collector efficiency		V_{CC} = 28 V dc				
	2N6985		f = 400 MHz P_{out} = 125 W Test circuit (see figure 2)	λ	50	---	%
	2N6986		f = 500 MHz P_{out} = 100 W Test circuit (see figure 3)	λ	50	---	%

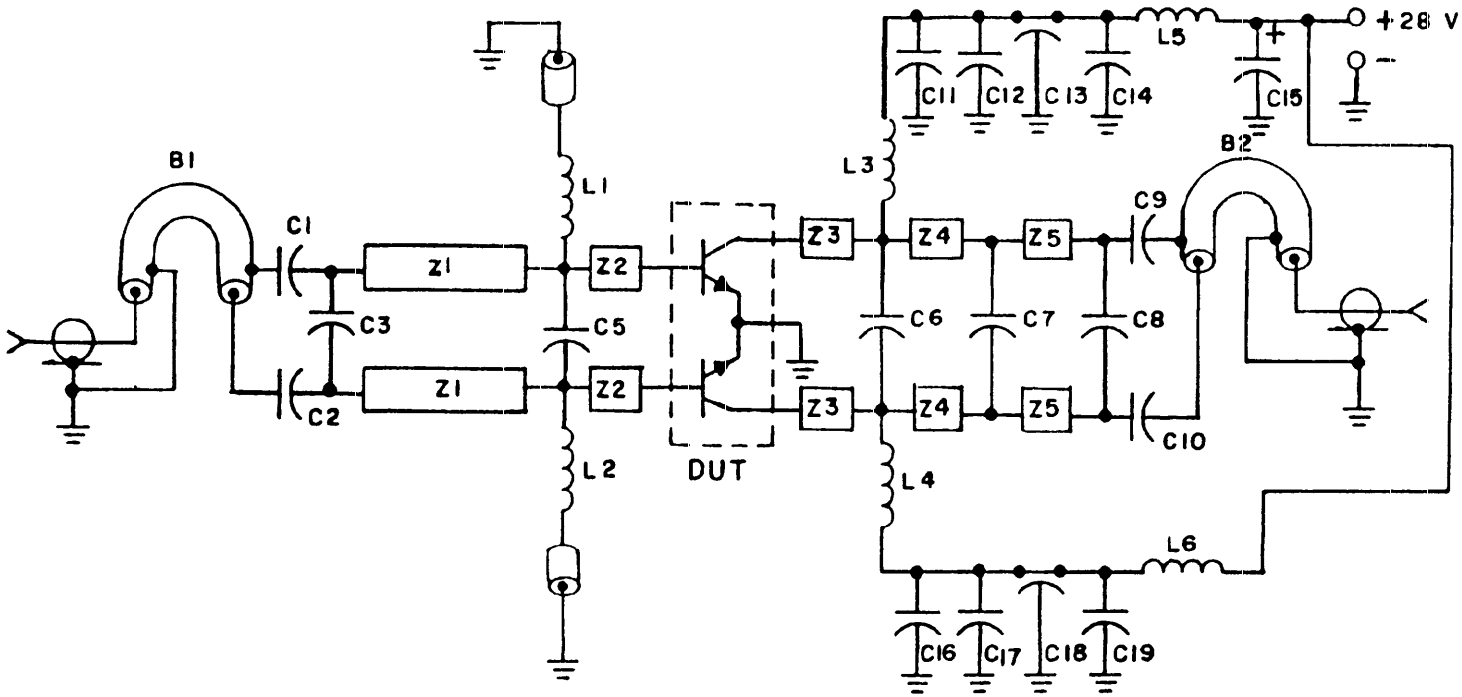

C1, C2 - 240 pF, 100 mil chip cap (ATC) or equivalent
C3 - 4.7 pF, 100 mil chip cap (ATC) or equivalent
C8 - 12 pF, 100 mil chip cap (ATC) or equivalent
C5 - 27 pF, 100 mil chip cap (ATC) or equivalent
C6 - 20 pF, 100 mil chip cap (ATC) or equivalent
C7 - 12 pF, 100 mil chip cap (ATC) or equivalent
C9, C10 - 270 pF, 100 mil chip cap (ATC) or equivalent
C11, C12, C16, C17 - 470 pF 100 mil chip cap (ATC) or equivalent
C13, C18 - 680 pF feedthru
C14, C19 - 0.1 μF Erie Redcap or equivalent
C15 - 20 μF, 50 V

B1 - balun, 50 Ω semi-rigid coaxial cable 86 mil OD, 2 inches L
B2 - balun, 50 Ω semi-rigid coaxial cable 86 mil OD, 2 inches L

L1, L2 - 0.15 μH molded choke with ferrite bead
L3, L4 - 2-1/2 turns no. 20 AWG .200 inch ID
L5, L6 - 3-1/2 turns no. 18 AWG .200 inch ID

Z1 - microstrip line 650 mil L x 125 mil W
Z2 - microstrip line 220 mil L x 125 mil W
Z3 - microstrip line 280 mil L x 125 mil W
Z4 - microstrip line 300 mil L x 125 mil W
Z5 - microstrip line 450 mil L x 125 mil W

Board material - .0625 inch teflon-fiberglass, $\varepsilon = 2.5 \pm .05$ 1 oz. copper clad, both sides.

FIGURE 2. Test fixture (400 MHz).

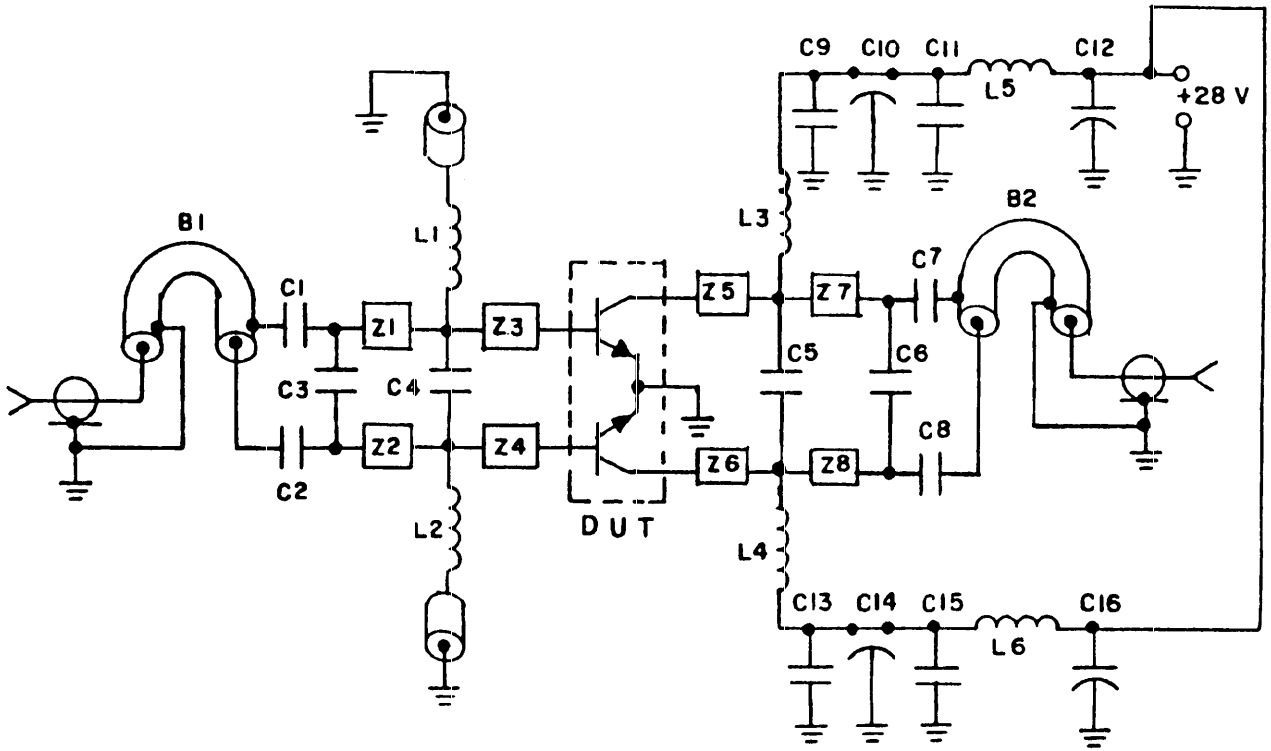

C1, C2, C7, C8 - 240 pF 100 mil chip cap
C3 - 12 pF 100 mil chip cap
C4 - 10 pF 100 mil chip cap
C5 - 36 pF 100 mil chip cap
C6 - 12 pF 100 mil chip cap
C9, C13 - 1000 pF 100 mil chip cap
C10, C14 - 680 pF feedthru cap
C11, C15 - 0.1 μF ceramic disc cap
C12, C16 - 50 μF 50 V

L1-L2 - 0.15 μH molded choke with ferrite bead
L3-L4 - 2-1/2 turns no. 20 AWG 0.200 inch ID
L5-L6 - 3-1/2 turns no. 18 AWG 0.200 inch ID

B1, B2 - balun 50 Ω semi rigid coax, 86 mil OD, 2 inches

Z1, Z2 - 450 mil x 125 mil W microstrip
Z3, Z4 - 340 mil x 125 mil W microstrip
Z5, Z6 - 280 mil x 125 mil W microstrip
Z7, Z8 - 600 mil x 125 mil W microstrip

Board material - .0325 inch teflon-fiberglass $\Sigma = 2.56$,
1 oz. copper clad both sides.

FIGURE 3. Test fixture (500 MHz).

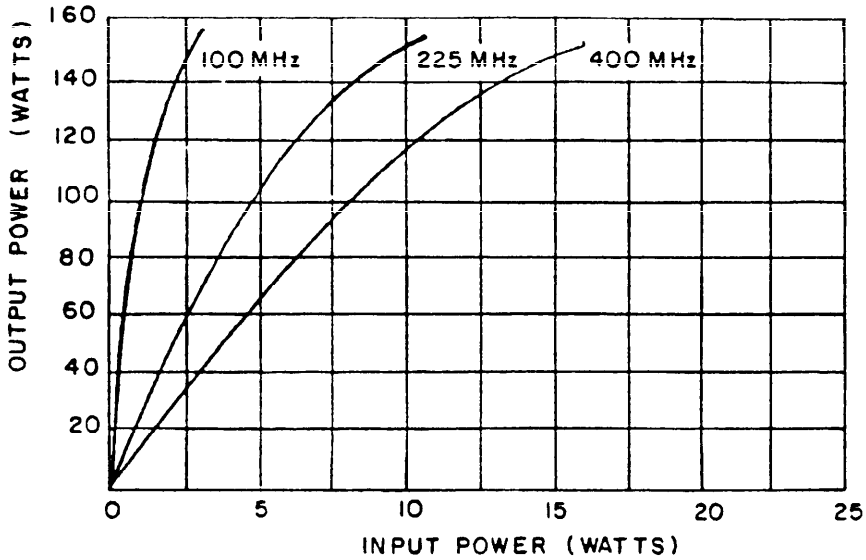

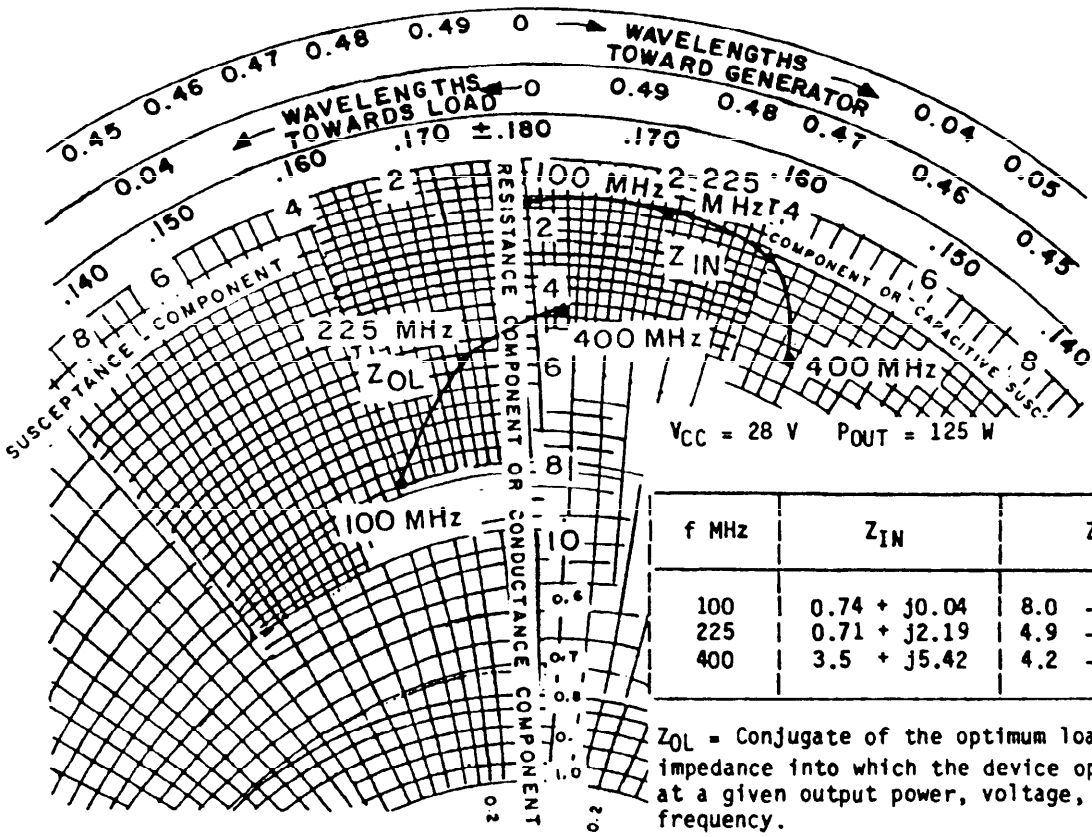

f MHz	Z_{IN}	Z_{OL}
100	0.74 + j0.04	8.0 - j3.9
225	0.71 + j2.19	4.9 - j0.88
400	3.5 + j5.42	4.2 - j0.93

Z_{OL} = Conjugate of the optimum load impedance into which the device operates at a given output power, voltage, and frequency.

NOTE: Input and output impedances are measured from base to base and collector to collector respectively.

FIGURE 4. 2N6985.

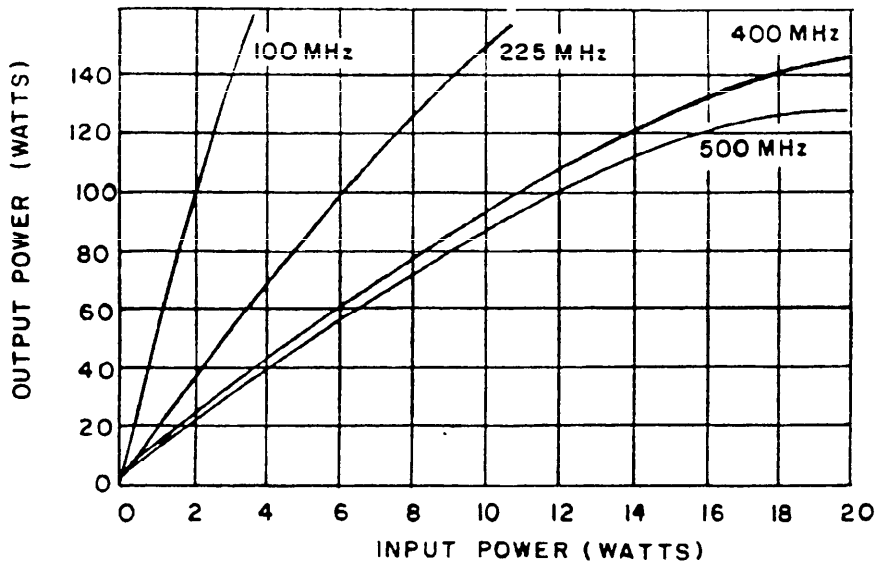

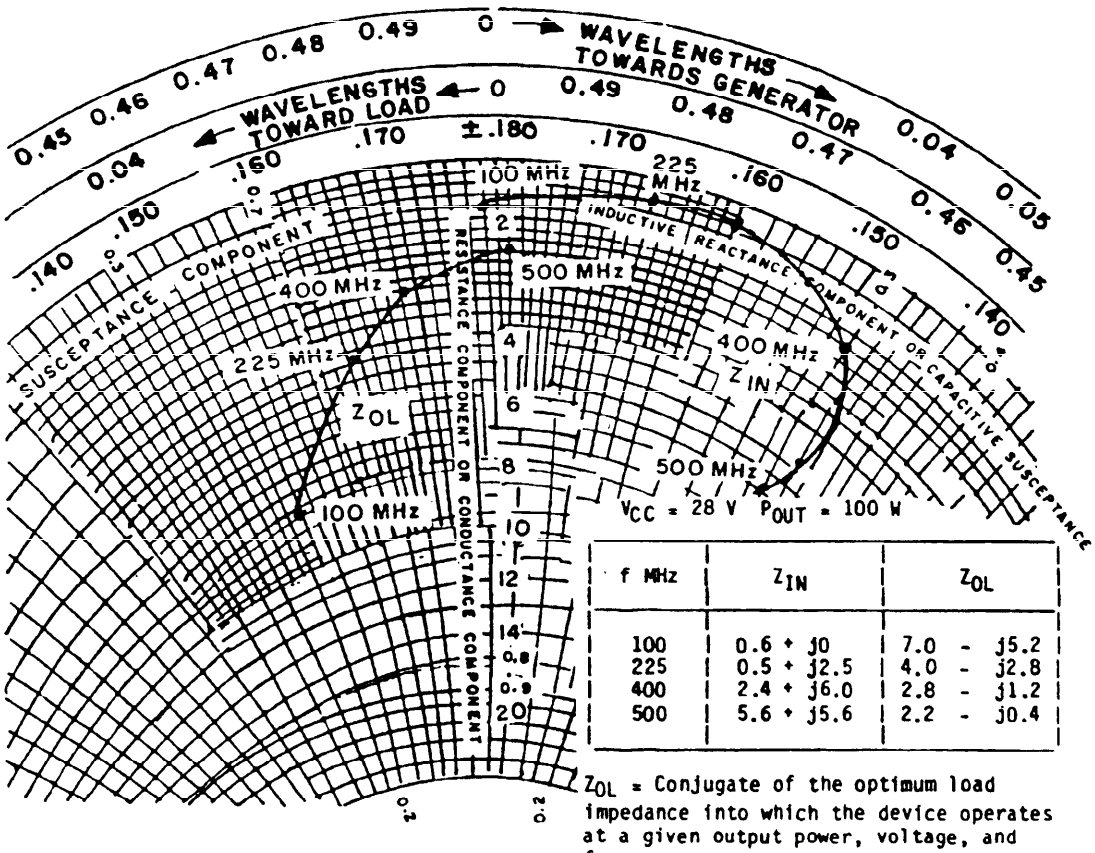

f MHz	Z_{IN}	Z_{OL}
100	0.6 + j0	7.0 - j5.2
225	0.5 + j2.5	4.0 - j2.8
400	2.4 + j6.0	2.8 - j1.2
500	5.6 + j5.6	2.2 - j0.4

Z_{OL} = Conjugate of the optimum load impedance into which the device operates at a given output power, voltage, and frequency.

NOTE: Input and output impedances are measured from base to base and collector to collector respectively.

FIGURE 5. 2N6986.

5. PACKAGING

5.1 Packaging requirements. The requirements for packaging shall be in accordance with MIL-S-19500.

6. NOTES

(This section contains information of a general or explanatory nature that may be helpful, but is not mandatory.)

6.1 Notes. The notes specified in MIL-S-19500 are applicable to this specification.

6.2 Typical power output and impedance curves. Typical power output and impedance curves for the 2N6985 and 2N6986 are shown are information only, see figures 4 and 5.

6.3 Substitution information. Devices covered by this specification are substitutable for the manufacturer's and user's part number. This information in no way implies that manufacturer's part numbers are suitable as a substitute for the military part number.

Supersession and cross reference data

Military part number	Manufacturer's CAGE code	Manufacturer's and user's part number

CONCLUDING MATERIAL

Custodians:
Army - ER
Navy - EC
Air Force - 17
NASA - NA

Review activities:
Army - AR, MI
Air Force - 11, 19, 85
DLA - ES

User activities:
Army - SM
Navy - AS, CG, MC, OS
Air Force - 13

Preparing activity:
Navy - EC

Agent:
DLA - ES

(Project 5961-1139)

STANDARDIZATION DOCUMENT IMPROVEMENT PROPOSAL

INSTRUCTIONS

1. The preparing activity must complete blocks 1, 2, 3, and 8 In block 1, both the document number and revision letter should be given.
2. The submitter of this form must complete blocks 4, 5, 6, and 7.
3. The preparing activity must provide a reply within 30 days from receipt of the form.

NOTE: This form may not be used to request copies of documents, nor to request waivers, or clarification of requirements on current contracts. Comments submitted on this form do not constitute or imply authorization to waive any portion of the referenced document(s) or to amend contractual requirements.

I RECOMMEND A CHANGE:	1. DOCUMENT NUMBER MIL-S-19500/584	2. DOCUMENT DATE (YYMMDD)

3. DOCUMENT TITLE
Semiconductor Device, RF Power Transistor, NPN, Silicon, Push-Pull

4. NATURE OF CHANGE *(Identify paragraph number and include proposed rewrite, if possible. Attach extra sheets as needed.)*

5. REASON FOR RECOMMENDATION

6. SUBMITTER

a. NAME (Last, First, Middle Initial)	b. ORGANIZATION	
c. ADDRESS (Include Zip Code)	d. TELEPHONE (Include Area Code) (1) Commercial (2) AUTOVON (If applicable)	7. DATE SUBMITTED (YYMMDD)

8. PREPARING ACTIVITY

a. NAME	b. TELEPHONE (Include Area Code) (1) Commercial	(2) AUTOVON
Alan Barone	(513) 296-6048	986-6048
c. ADDRESS (Include Zip Code) DESC-ECT Dayton, OH 45444-5280	IF YOU DO NOT RECEIVE A REPLY WITHIN 45 DAYS, CONTACT: Defense Quality and Standardization Office 5203 Leesburg Pike, Suite 1403, Falls Church, VA 22041-3466 Telephone (703) 756-2340 AUTOVON 289-2340	