The documentation and process conversion measures necessary to comply with this revision shall be completed by 10 October 1991.

INCH-POUND

MIL-S-19500/277D
10 June 1991
SUPERSEDING
MIL-S-19500/277C
12 August 1968

MILITARY SPECIFICATION

SEMICONDUCTOR DEVICE, TRANSISTOR, NPN, SILICON, POWER
TYPES 2N2150 AND 2N2151 JANTX

This specification is approved for use by all Departments and Agencies of the Department of Defense.

1. SCOPE

1.1 Scope. This specification covers the detail requirements for NPN, silicon, power transistors. One level of product assurance is provided for each device type as specified in MIL-S-19500.

1.2 Physical dimensions. See figure 1.

1.3 Maximum ratings. T_C = 25°C, unless otherwise specified.

P_T T_C = +100°C	V_{CBO}	V_{CEO}	V_{EBO}	I_B	I_C	T_J and T_{STG}	$R_{\theta JC}$
W	V dc	V dc	V dc	A dc	A dc	°C	°C/W
30	150	100	8	2	2	-65 to +200	3.3

1/ Derate linearly, 0.3 W/°C for T_C > 100°C.

1.4 Primary electrical characteristics. T_C = +25°C.

	h_{FE} 1/				C_{obo}	$\|h_{fe}\|$	$V_{BE(sat)}$ 1/	$V_{CE(sat)}$ 1/
Limits	I_C = 1 A dc V_{CE} = 5.0 V dc		I_C = 0.5 A dc V_{CE} = 5 V dc		100 kHz ≤ f ≤ 1 MHz V_{CB} = 20 V dc I_E = 0	f = 10 MHz I_C = 0.1 A dc V_{CE} = 30 V dc	I_C = 1 A dc I_B = 0.1 A dc	I_C = 1 A dc I_B = 0.1 A dc
	2N2150	2N2151	2N2150	2N2151				
					pF		V dc	V dc
Min	20	40	20	40		1		
Max	60	120	60	120	160	7	1.2	1.0

1/ Pulsed (see 4.5.1).

Beneficial comments (recommendations, additions, deletions) and any pertinent data which may be of use in improving this document should be addressed to: Commander, U.S. Army Laboratory Command, ATTN: SLCET-R-S, Ft. Monmouth, NJ, 07703-5302, by using the Standardized Document Improvement Poposal (DD Form 1426) appearing at the end of this document or by letter.

AMSC N/A
FSC 5961

DISTRIBUTION STATEMENT A. Approved for public release; distribution is unlimited.

2. APPLICABLE DOCUMENTS

2.1 Government documents.

2.1.1 Specifications, standards, and handbooks. The following specifications, standards, and handbooks form a part of this document to the extent specified herein. Unless otherwise specified, the issues of these documents are those listed in the issue of the Department of Defense Index of Specifications and Standards (DODISS) and supplement thereto, cited in the solicitation.

SPECIFICATION

MILITARY

MIL-S-19500 - Semiconductor Devices, General Specification For.

STANDARD

MILITARY

MIL-STD-750 - Test Method for Semiconductor Devices.

(Unless otherwise indicated, copies of federal and military specifications, standards, and handbooks are available from the Standardization Documents Order Desk, Building 4D, 700 Robbins Avenue, Philadelphia, PA 19111-5094.)

2.2 Order of precedence. In the event of a conflict between the text of this document and the references cited herein, the text of this document takes precedence. Nothing in this document, however, supersedes applicable laws and regulations unless a specific exemption has been obtained.

3. REQUIREMENTS

3.1 Detail specification. The individual item requirements shall be in accordance with MIL-S-19500, and as specified herein.

3.2 Abbreviations, symbols, and definitions. Abbreviations, symbols, and definitions used herein shall be specified in MIL-S-19500.

3.3 Design, construction, and physical dimensions. The design, construction, and physical dimensions shall be as specified in MIL-S-19500, and on figure 1 herein.

3.3.1 Lead material and finish. Lead material shall be Kovar or Alloy 52. Lead finish shall be solderable as defined in MIL-S-19500, MIL-STD-750, and herein. Where a choice of lead material or finish is desired, it shall be specified in the acquisition document.

3.4 Marking. Marking shall be in accordance with MIL-S-19500. Except at the option of the manufacturer, the following marking may be omitted from the body of the transistor:

a. Country of origin.

b. Manufacturer's identification.

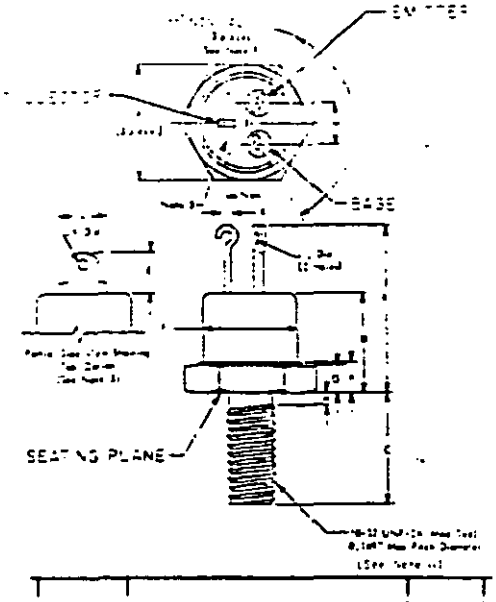

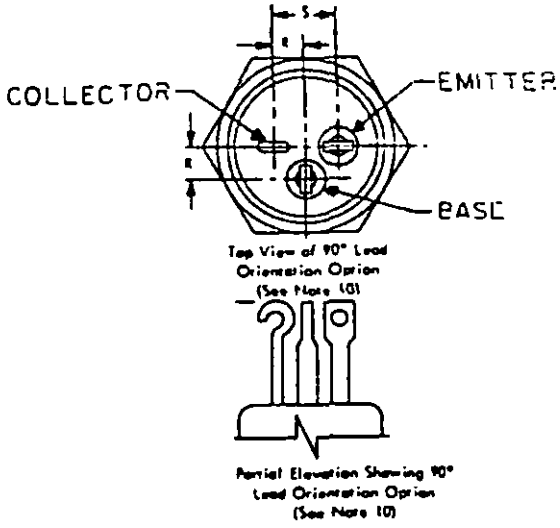

Ltr	Dimensions				Notes
	Inches		Millimeters		
	Min	Max	Min	Max	
A	.424	.437	10.77	11.10	2
B	.570	.763	14.47	19.38	6
C	.400	.455	10.16	11.56	
D	.320	.468	8.13	11.89	
E	.175	.200	4.45	5.08	5
F	.318	.380	8.08	9.65	
G	.090	.150	2.29	3.81	
H	---	.078	---	1.98	7

Ltr	Dimensions				Notes
	Inches		Millimeters		
	Min	Max	Min	Max	
J	.040	.065	1.02	1.65	
K	.040	.070	1.02	1.78	
L	---	.185	---	4.70	5
M	.125	.165	3.18	4.19	2
N	.110	.145	2.79	3.68	2, 8
P	---	.250	---	6.35	
R	.090	.110	2.29	2.79	2
S	.185	.215	4.70	5.46	2

NOTES:
1. Metric equivalents are given for general information only.
2. Position of leads with respect to the hexagon is not controlled.
3. The case temperature may be measured anywhere on the seating plane within .125 inch of the stud.
4. The collector is in electrical contact with the case.
5. The collector terminal may be a hook or tab at the option of the manufacturer.
6. For all 3 terminals (except tab if utilized).
7. Maximum unthreaded dimension.
8. Dimension N is measured from center line of hook or outside edge of tab.
9. The 120° dimension applies to the location of the centerline of the terminals.
10. A 90° angle lead orientation as shown may be used at the option of the manufacturer. All dimensions of the basic outline except M, N, and the 120° lead angle apply to this option.
11. Threads in accordance with Handbook H28.

FIGURE 1. Physical dimensions.

4. QUALITY ASSURANCE PROVISIONS

4.1 Sampling and inspection. Sampling and inspection shall be in accordance with MIL-S-19500, and as specified herein.

4.2 Qualification inspection. Qualification inspection shall be in accordance with MIL-S-19500.

4.3 Screening (JANTX level only). Screening shall be in accordance with MIL-S-19500 (table II), and as specified herein. The following measurements shall be made in accordance with table I herein. Devices that exceed the limits of table I herein shall not be acceptable.

Screen (see table II of MIL-S-19500)	Measurement JANTX and JANTXV levels
9	Not applicable
11	I_{CES} and h_{FE1}
12	See 4.3.1
13	Subgroup 2 of table I herein; ΔI_{CES} = 100 percent of initial value or 2 µA dc; Δh_{FE} = ±20 percent of initial value.

4.3.1 Power burn-in conditions. Power burn-in conditions are as follows:

T_J = +187.5°C ±12.5°C; V_{CE} = 40 V dc; T_A = 25°C.

4.4 Quality conformance inspection. Quality conformance inspection shall be in accordance with MIL-S-19500.

4.4.1 Group A inspection. Group A inspection shall be conducted in accordance with MIL-S-19500, and table I herein. (Endpoint electrical measurements shall be in accordance with the applicable steps of table IV herein).

4.4.2 Group B inspection. Group B inspection shall be conducted in accordance with the conditions specified for subgroup testing in table IV (JANTX) of MIL-S-19500, and table II herein. Electrical measurements (end points) and delta requirements shall be in accordance with the applicable steps of table IV herein.

4.4.3 Group C inspection. Group C inspection shall be conducted in accordance with the conditions specified for subgroup testing in table V of MIL-S-19500, and table III herein. Electrical measurements (end points) and delta requirements shall be in accordance with the applicable steps of table IV herein.

4.5 Methods of inspection. Methods of inspection shall be as specified in the appropriate tables and as follows:

4.5.1 Pulse measurements. Conditions for pulse measurements shall be as specified in MIL-STD-750.

TABLE I. Group A inspection.

Inspection 1/	MIL-STD-750 Method	MIL-STD-750 Conditions	Symbol	Limits Min	Limits Max	Unit
Subgroup 1						
Visual and mechanical examination	2071					
Subgroup 2						
Breakdown voltage, collector to emitter	3011	Bias condition D, pulsed (see 4.5.1) I_C = 50 mA dc	$V_{(BR)CEO}$	100		V dc
Breakdown voltage, collector to base	3001	Bias condition D; I_C = 100 μA dc	V_{CBO}	150		V dc
Collector emitter cutoff current	3041	Bias condition D, V_{CE} = 80 V dc	I_{CEO}		10	μA dc
Emitter to base cutoff current	3061	Bias condition D, V_{EB} = 8 V dc	I_{EBO}		2	μA dc
Collector to emitter cutoff current	3041	Bias condition A, V_{BE} = -1.0 V dc, V_{CE} = 120 V dc	I_{CEX1}		5	μA dc
Collector to emitter cutoff current	3041	Bias condition A, V_{CE} = 120 V dc, V_{BE} = 0	I_{CES}		5	μA dc
Collector to base cutoff current	3036	Bias condition D, V_{CB} = 120 V dc	I_{CBO}		5	μA dc
Base emitter voltage (nonsaturated)	3066	Test condition B, pulsed (see 4.5.1), V_{CE} = 5 V dc, I_C = 1.0 A dc	V_{BE}		1.2	V dc
Base emitter voltage (saturated)	3066	Pulsed (see 4.5.1), I_C = 1 A dc, I_B = 0.1 A dc, Test condition A	$V_{BE(sat)}$		1.2	V dc
Saturation voltage and resistance (collector to emitter saturation voltage)	3071	Pulsed (see 4.5.1), I_C = 1 A dc, I_B = 0.1 A dc	$V_{CE(sat)}$		1.0	V dc
Forward-current transfer ratio	3076	Pulsed (see 4.5.1), I_C = 1 A dc, V_{CE} = 5 V dc	h_{FE1}			
2N2150				20	60	
2N2151				40	120	

See footnote at end of table.

TABLE I. Group A inspection - Continued.

Inspection 1/	MIL-STD-750 Method	MIL-STD-750 Conditions	Symbol	Limits Min	Limits Max	Unit
Forward-current transfer ratio	3076	Pulsed (see 4.5.1), I_C = 0.5 A dc, V_{CE} = 5 V dc	h_{FE2}			
2N2150				20	60	
2N2151				40	120	
Forward-current transfer ratio	3076	Pulsed (see 4.5.1), I_C = 0.1 A dc, V_{CE} = 5 V dc	h_{FE3}			
2N2150				20		
2N2151				40		
Subgroup 3						
High temperature operation		T_A = +150°C				
Collector to emitter cutoff current	3041	Bias condition A, V_{BE} = -1 V dc, V_{CE} = 120 V dc	I_{CEX2}		100	µA dc
Emitter to base cutoff current	3061	Bias condition D, V_{EB} = 8 V dc	I_{EBO}		20	µA dc
Low temperature operation		T_A = -55°C				
Forward-current transfer ratio	3076	V_{CE} = 5 V dc, pulsed (see 4.5.1), I_C = 0.5 A dc	h_{FE4}			
2N2150				10		
2N2151				20		
Subgroup 4						
Magnitude of common emitter small-signal short-circuited forward current transfer ratio	3306	V_{CE} = 30 V dc, I_C = 0.1 mA dc, f = 10 MHz	$\lvert h_{fe} \rvert$	1	7	
Open circuit output capacitance	3236	V_{CB} = 20 V dc; I_E = 0, 100 kHz $\leq$ f $\leq$ 1.0 MHz	C_{obo}		160	pF
Subgroup 5						
Safe operating area (continuous dc)	3051	T_C = 100°C, t = 1s, 1 cycle (see figure 2)				

See footnote at end of table.

TABLE I. Group A inspection - Continued.

Inspection 1/	MIL-STD-750		Symbol	Limits		Unit
	Method	Conditions		Min	Max	
Test 1		I_C = 2 A dc, V_{CE} = 15 V dc				
Test 2		I_C = 200 mA dc, V_{CE} = 57 V dc				
Test 3		I_C = 25 mA dc, V_{CE} = 100 V dc				
Electrical measurements		See table IV, steps 1 and 3				
Subgroups 6 and 7						
Not applicable						

1/ For sampling plan, see MIL-S-19500.

TABLE II. Group B inspection for JANTX devices.

Inspection 1/	MIL-STD-750	
	Method	Conditions
Subgroup 1		
Solderability	2026	
Resistance to solvents	1022	
Subgroup 2		
Thermal shock (temperature cycling)	1051	
Hermetic seal	1071	
Fine leak		
Gross leak		
Electrical measurements		See table IV, steps 1 and 3
Subgroup 3		
Steady-state operation life	1027	T_J = +187.5 ±12°C; V_{CE} = 40 V dc; T_A = 25°C
Electrical measurements		See table IV, steps 2, 3, and 6
Subgroup 4		
Decap internal visual (design verification)	2075	
Bond strength	2037	Test condition A, all internal wires for each device shall be pulled separately
Subgroup 5		
Thermal resistance (forward voltage drop emitter to base diode method)	3131	See 4.5.3
Subgroup 6		
High-temperature life (nonoperating)	1032	T_{STG} = 200°C
Electrical measurements		See table IV, steps 2 and 3

See footnote at end of table.

TABLE II. Group B inspection for JANTX devices - Continued.

Inspection 1/	MIL-STD-750	
	Method	Conditions
Subgroup 7		
Safe operating area (switching)	3053	T_C = 100°C, duty cycle ≤ 5 percent, $t_r = t_f \leq 2\ \mu s$ I_C = 2.0 A (pk)
Test 1 (unclamped inductive)		Load condition C, (see figure 3); L = 10 mH, R_{BB1} = 20Ω, V_{BB1} = 10 V dc, R_{BB2} = ∞, V_{BB2} = 0 V dc, V_{CC} = 10 V dc, R_S ≤ 1.0Ω, R of inductor ≤ 0.1Ω
Test 2 (clamped inductive) (destructive)		Load condition B, (see figure 4); L = 40 mH, R_{BB1} = 15Ω, V_{BB1} = 10 V dc, R_{BB2} = 20Ω, V_{BB2} = 3.0 V dc, V_{CC} = 10 V dc, R_S ≤ 1.0Ω, R of inductor ≤ 0.1Ω
Electrical measurements		See table IV, steps 1 and 3

1/ For sampling plan, see MIL-S-19500.

TABLE III. Group C inspection (all quality levels).

Inspection 1/	MIL-STD-750	
	Method	Conditions
Subgroup 1		
Physical dimensions	2066	See figure 1
Subgroup 2		
Thermal shock (glass strain)	1056	Test condition B
Terminal strength (tension)	2036	Test condition A, weight = 7 pounds, time = 15 s
Terminal strength (stud torque)		Test condition D2; Torque = 15 inch-pounds; t = 15 s
Terminal strength (terminal torque)		Test condition D1; Torque = 6 inch-ounces; t = 15 s (emitter and base terminals only)
Hermetic seal a. Fine leak b. Gross leak	1071	
Moisture resistance	1021	
External visual	2071	
Electrical measurements		See table IV, steps 2 and 3
Subgroup 3		
Shock	2016	1,500 G, 0.5 ms
Vibration, variable frequency	2056	
Constant acceleration	2006	
Electrical measurements		See table IV, steps 2 and 3
Subgroup 4		
Salt atmosphere (corrosion)	1041	

See footnote at end of table.

TABLE III. Group C inspection (all quality levels) - Continued.

Inspection 1/	MIL-STD-750	
	Method	Conditions
Subgroup 5		
Not applicable		
Subgroup 6		
Steady-state operation life	1026	V_{CE} = 40; T_A = 25°C; T_J = 187.5°C ±12°C
Electrical measurements		See table IV, steps 2, 3, 4, 5, and 6

1/ For sampling plan, see MIL-S-19500.

TABLE IV. Groups A, B, and C electrical measurements.

Step	Inspection	MIL-STD-750		Symbol	Limits		Unit
		Method	Conditions		Min	Max	
1.	Breakdown voltage collector to emitter	3011	Bias condition D; I_C = 50 mA dc; Pulsed (see 4.5.1)	V_{CEO}	100		V dc
2.	Collector to emitter cutoff current	3041	Bias condition C; V_{BE} = 0 V dc, V_{CE} = 120 V dc	I_{CES}		5	µA dc
3.	Foward-current tranfer ratio	3076	V_{CE} = 5 V dc, pulsed (see 4.5.1), I_C = 1 A dc	h_{FE1}			
	2N2150				20	60	
	2N2151				40	120	
4.	Collector to emitter cutoff current	3041	Bias condition C, V_{BE} = 0 V dc, V_{CE} = 120 V dc	ΔI_{CES} 1/	100 percent of initial value or 2 µA dc, whichever is greater		
5.	Forward-current transfer ratio	3076	V_{CE} = 5.0 V dc, pulsed (see 4.5.1), I_C = 1 A dc	Δh_{FE} 1/	±20 change from previously measured value.		
6.	Thermal resistance	3151		$R_{\theta JC}$		3.3	°C/W

1/ Devices which exceed the group A limits for this test shall not be acceptable.

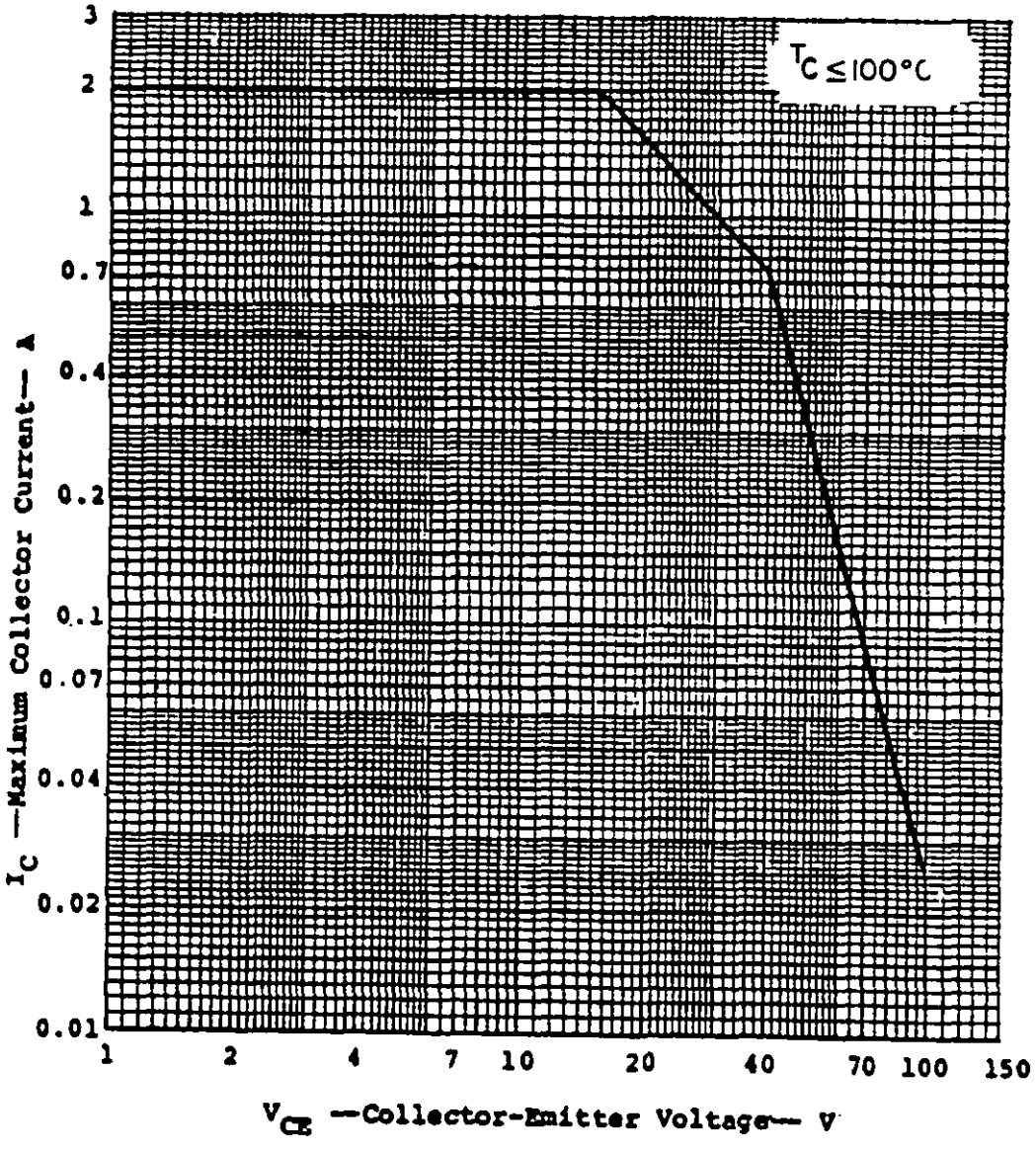

V_{CE} - Collector-Emitter Voltage - V

FIGURE 2. Nomograph of maximum safe operating area (continuous dc).

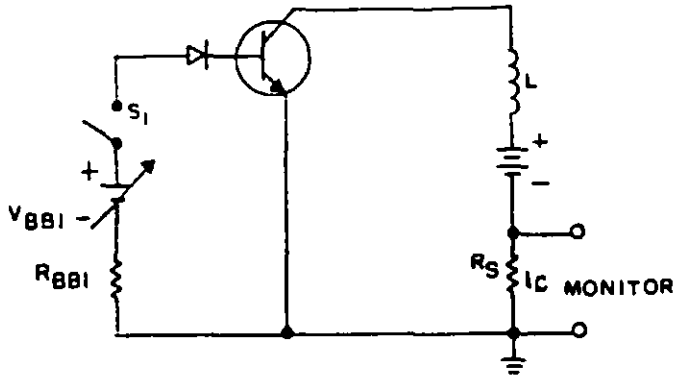

$R_S \leq 1$ ohm (noninductive).
L = 10 MH, .09 ohms DC resistance, 12 amps (Tabtron type CR-6004 or equivalent).
Procedure:
1. With switch S1 closed, set the specified test conditions.
2. Open S1. Device fails if second breakdown occurs.
3. Perform specified end point tests.

FIGURE 3. Unclamped inductive sweep test circuit.

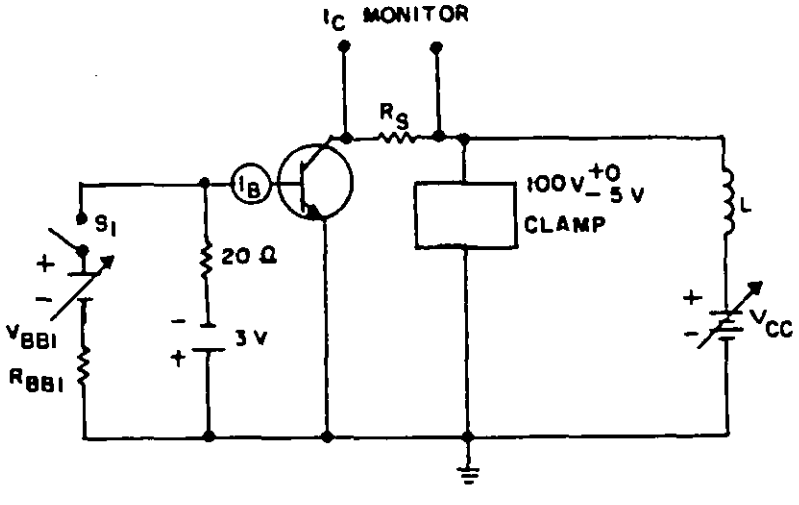

$R_S \leq 1$ ohm (noninductive).
L = 40 MH, .28 ohms DC resistance, 2.5 amps (Triad type C48-U or equivalent).
Procedure:
1. With switch S1 closed, set the specified test conditions.
2. Open S1. Device fails if clamp voltage is not reached.
3. Perform specified end point tests.

FIGURE 4. Clamped inductive sweep test circuit.

4.5.2 Thermal resistance. Thermal resistance measurements shall be conducted in accordance with method 3131 of MIL-STD-750. The following details shall apply:

a. Collector current magnitude during power application shall be 10 A dc.

b. Collector to emitter voltage magnitude shall be 10 V dc.

c. Reference temperature measuring point shall be the case.

d. Reference point temperature shall be 25°C $\leq T_R \leq$ 35°C and recorded before the test is started.

e. Mounting arrangement shall be with heat sink to header.

f. Maximum limit of $R_{\theta JC}$ shall be 3.3°C/W.

5. PACKAGING

5.1 Packaging requirements. The requirements for packaging shall be in accordance with MIL-S-19500.

6. NOTES

(This section contains information of a general or explanatory nature that may be helpful, but is not mandatory).

6.1 Notes. The notes specified in MIL-S-19500 are applicable to this specification.

6.2 Acquisition requirements. Acquisition documents must specify the following:

a. Title, number, and date of the specification.

b. Issue of DODISS to be cited in the solicitation, and if required, the specific issue of individual documents referenced (see 2.1.1).

c. The lead finish may be specified (see 3.3.1).

6.3 Substitution information. Devices covered by this specification are substitutable for the manufacturer's and user's Part or Identifying Number (PIN). This information in no way implies that manufacturer's PIN's are suitable as a substitute for the military PIN's.

6.3.1 JAN substitution. JANTX devices are a direct replacement for JAN marked devices.

6.4 Changes from previous issue. Asterisks are not used in this revision to identify changes with respect to the previous issue due to the extensiveness of the changes.

CONCLUDING MATERIAL

Custodians:
Army - ER
Navy - EC
Air Force - 17

Review activities:
Army - AR, MI
Navy - SH
Air Force - 85
DLA - ES

User activities:
Army - SM
Navy - AS, CG, MC, OS
Air Force - 19

Preparing activity:
Army - ER

Agent:
DLA - ES

(Project 5961-1218)

STANDARDIZATION DOCUMENT IMPROVEMENT PROPOSAL

INSTRUCTIONS

1. The preparing activity must complete blocks 1, 2, 3, and 8 In block 1, both the document number and revision letter should be given.
2. The submitter of this form must complete blocks 4, 5, 6, and 7.
3. The preparing activity must provide a reply within 30 days from receipt of the form.

NOTE: This form may not be used to request copies of documents, nor to request waivers, or clarification of requirements on current contracts. Comments submitted on this form do not constitute or imply authorization to waive any portion of the referenced document(s) or to amend contractual requirements.

I RECOMMEND A CHANGE:	1. DOCUMENT NUMBER MIL-S-19500/277D	2. DOCUMENT DATE (YYMMDD) 10 June 1991

3. DOCUMENT TITLE
Semiconductor Device, Transistor, NPN, Silicon, Power, Types 2N2150 and 2N2151 JANTX

4. NATURE OF CHANGE (*Identify paragraph number and include proposed rewrite, if possible. Attach extra sheets as needed.*)

5. REASON FOR RECOMMENDATION

6. SUBMITTER

a. NAME (Last, First, Middle Initial)	b. ORGANIZATION	
c. ADDRESS (Include Zip Code)	d. TELEPHONE (Include Area Code) (1) Commercial (2) AUTOVON (If applicable)	7. DATE SUBMITTED (YYMMDD)

8. PREPARING ACTIVITY

a. NAME Cdr, LABCOM	b. TELEPHONE (Include Area Code) (1) Commercial (908) 544-3296 (2) AUTOVON 995-3296
c. ADDRESS (Include Zip Code) ATTN: SLCET-RS Ft Monmouth, NJ 07703-5000	IF YOU DO NOT RECEIVE A REPLY WITHIN 45 DAYS, CONTACT: Defense Quality and Standardization Office 5203 Leesburg Pike, Suite 1403, Falls Church, VA 22041-3466 Telephone (703) 756-2340 AUTOVON 289-2340