MIL-S-19500/250B
5 April 1971
SUPERSEDING
MIL-S-19500/250A(EL)
26 December 1963

MILITARY SPECIFICATION

SEMICONDUCTOR DIODE, SILICON, UHF MIXER

TYPE 1N82AG

This specification is mandatory for use by all Departments and Agencies of the Department of Defense.

1. SCOPE

1.1 Scope. This specification covers the detail requirements for a silicon semiconductor diode for use in UHF mixer circuit applications.

1.2 Ratings and characteristics:

P_o 1/	V_R	v_r	I_o	$f_{(range)}$
mW	Vdc	Vdc	mA	Hz
100	3	5	25	0 to 1000

1/ This power dissipation rating applies at T_A = +25°C. For power dissipation ratings at T_A = over +25°C and up to +100°C, derate at 1.1 mW/°C.

OPERATING AMBIENT TEMPERATURE: -65° to +100°C

STORAGE TEMPERATURE: -65° to +100°C

2. APPLICABLE DOCUMENTS

2.1 The following documents, of the issue in effect on date of invitation for bids or request for proposal, form a part of the specification to the extent specified herein.

SPECIFICATION

MILITARY

MIL-S-19500 - Semiconductor Devices, General Specification For.

STANDARD

MILITARY

MIL-STD-750 - Test Methods for Semiconductor Devices.

(Copies of specifications, standards, drawings, and publications required by suppliers in connection with specific procurement functions should be obtained from the procuring activity or as directed by the contracting officer.)

3. REQUIREMENTS

3.1 General. Requirements for semiconductor diodes shall be in accordance with MIL-S-19500, and as specified herein.

3.2 Abbreviations and symbols. The abbreviations and symbols used herein are defined in MIL-S-19500.

3.3 Design, construction, and physical dimensions. Diodes shall be of the design, construction and physical dimensions as shown on figure 1.

3.4 Performance characteristics. Performance characteristics shall be as specified in **tables I and II.**

3.5 Marking. The marking shall be as specified in MIL-S-19500 except that the manufacturer's identification and country of origin may be omitted.

3.5.1 Polarity. The polarity shall be indicated with a contrasting color band to denote the cathode end.

4. QUALITY ASSURANCE PROVISIONS

4.1 Sampling and inspection. Sampling and inspection shall be in accordance with MIL-S-19500, and as specified herein.

4.2 Qualification inspection. Qualification inspection shall consist of the examination and tests specified in tables I and II.

4.3 Quality conformance inspection. Quality conformance inspection shall consist of the examinations and tests specified in groups A and B.

4.4 Group A inspection. Group A inspection shall consist of the examinations and tests specified in table I.

4.5 Group B inspection. Group B inspection shall consist of the examinations and tests specified in table II.

4.6 Methods of examination and test. Methods of examination and test shall be as specified in tables I and II.

TABLE I. Group A inspection.

Examination or test	MIL-STD-750		LTPD	Symbol	Limits		Unit
	Method	Details			Min	Max	
Subgroup 1			5				
Visual and mechanical examination	2071			---	---	---	---
Subgroup 2			5				
Forward voltage	4011	I_F = 5 mAdc		V_F	---	0.5	Vdc
Forward voltage	4011	I_F = 15 mAdc		V_F	0.5	---	Vdc
Forward voltage	4011	I_F = 30 mAdc		V_F	---	1.25	Vdc
Reverse current	4016	V_R = 0.5 Vdc		I_R	---	50	μAdc
Reverse current	4016	V_R = 3.0 Vdc		I_R	---	500	μAdc
Subgroup 3			5				
Noise figure	---	Test conditions and measurement per figure 2 herein		$\overline{F}_o$	---	14.5	dB

TABLE II. Group B inspection.

Examination or test	MIL-STD-750		LTPD	Symbol	Limits		Unit
	Method	Details			Min	Max	
Subgroup 1			20				
Physical dimensions	2066	(See figure 1)		---	---	---	---
Subgroup 2			10				
Solderability	2026			---	---	---	---
Thermal shock (temperature cycling)	1051	Test condition B $T_{(high)}$ = +100° C 10 cycles		---	---	---	---
Thermal shock (glass strain)	1056	Test condition A $T_{(high)}$ = +85° C		---	---	---	---
Moisture resistance	1021	No initial conditioning		---	---	---	---
End-point tests:							
Forward voltage	4011	I_F = 5 mAdc		V_F	---	0.5	Vdc
Forward voltage	4011	I_F = 15 mAdc		V_F	0.5	---	Vdc
Reverse current	4016	V_R = 0.5 Vdc		I_R	---	50	μAdc
Noise figure	---	Test conditions and measurement per figure 2 herein		F_o	---	14.5	dB
Subgroup 3			10				
Shock	2016	Non-operating, 500G. 3 blows each in orientations; X_1, Y_1, Y_2, Z_1 (total = 12 blows)		---	---	---	---
Vibration, variable frequency	2056	Non-operating, 10G		---	---	---	---
End-point tests:							
(Same as for Subgroup 2)							
Subgroup 4			10				
Lead tension	2036	Test condition A Weight = 1 lb. t = 1 minute max.		---	---	---	---
Lead bend	2036	Test condition F Weight = 1 lb. t = 1 minute max.					
End-point tests:							
(Same as for Subgroup 2)							
Subgroup 5			λ = 10				
High-temperature life	1031	T_A = +100° C		---	---	---	---

TABLE II. Group B inspection. -Continued

Examination or test	MIL-STD-750		LTPD	Symbol	Limits		Unit
	Method	Details			Min	Max	
Subgroup 5 -Continued							
End-point tests							
Forward voltage	4011	I_F = 5 mAdc		V_F	---	0.5	Vdc
Forward voltage	4011	I_F = 15 mAdc		V_F	0.5	---	Vdc
Reverse current	4016	V_R = 0.5 Vdc		I_R	---	75	µAdc
Noise figure	---	Test conditions and measurement per figure 2 herein		$\bar{F}_o$	---	16	dB

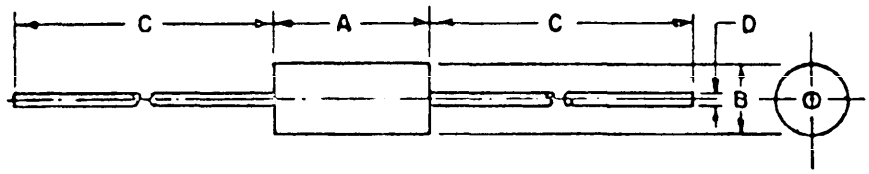

Ltr	Dimensions				Notes
	Inches		Millimeters		
	Min	Max	Min	Max	
A	.230	.300	5.84	7.62	
B	.085	.107	2.16	2.72	4
C	1.000	1.500	25.40	38.10	3
D	.019	.021	.48	.53	1,2&3

NOTES:
1. The specified lead diameter applies in the zone between .050 (1.27 mm) and 1.000 (25.40 mm) from the diode body. Outside of this zone the lead diameter is not controlled.
2. Gold plated or tinned leads may be supplied providing units conform to subgroups 2 and 4 of Group B inspection.
3. Both leads shall be within the specified dimension.
4. The minimum body diameter shall be maintained over .15 (.38 mm) of body length.
5. Metric equivalents (to the nearest .01 mm) are given for general information only and are based upon 1 inch = 25.4 mm.

FIGURE 1. Semiconductor device, diode, type 1N 82AG.

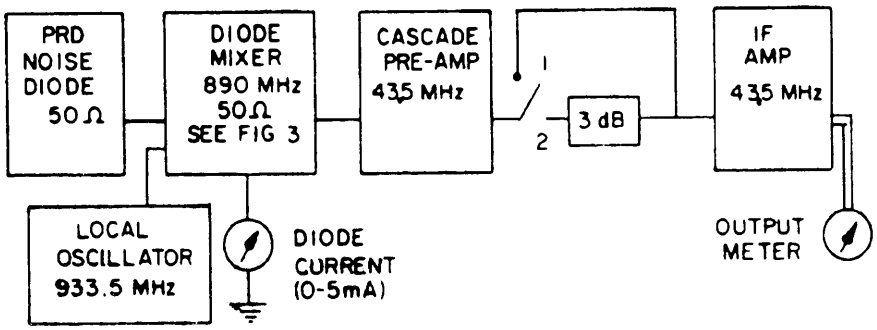

PROCEDURAL NOTES:

1. The local oscillator is adjusted to an average of 1.0 to 2.0 mA for an average group of diodes when the meter circuit is 10 ohms (including meter). The preamplifier noise figure is 4.5 dB maximum.

2. With no attenuation (switch on position 1), the output meter reading is noted. Switching to position 2, the noise input is increased until the same noise output is obtained. The increase in output noise shall not exceed the specified limit.

FIGURE 2. Noise figure test set-up.

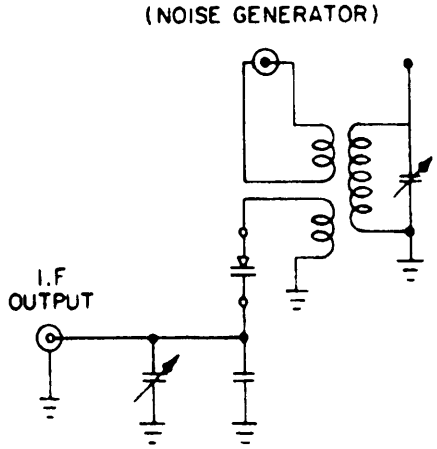

FIGURE 2a. Equivalent low-frequency circuit.

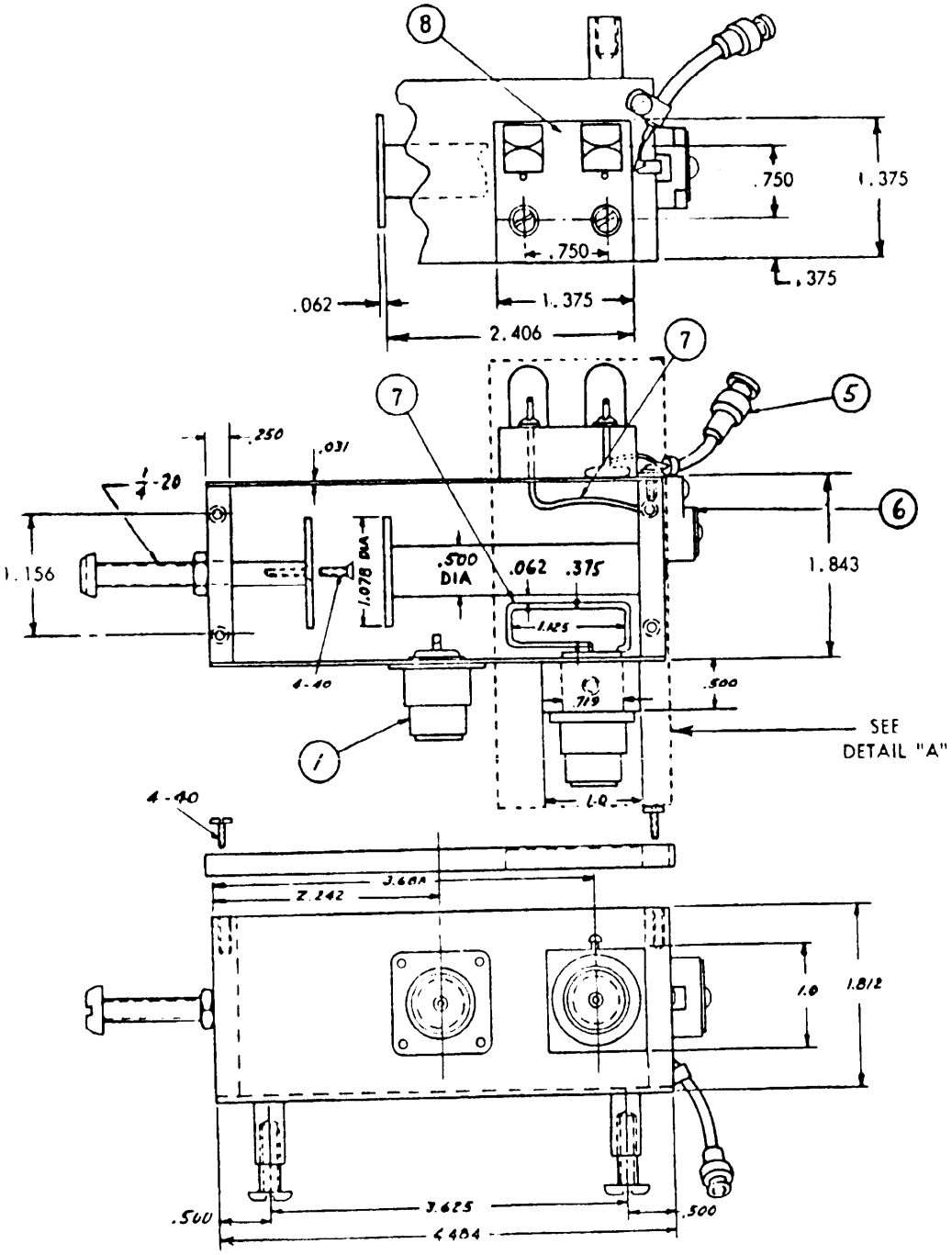

FIGURE 3. Diode mixer for noise figure test.

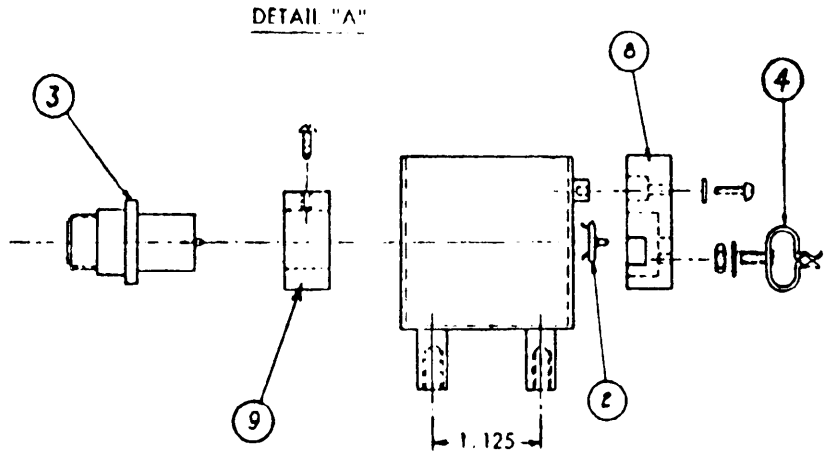

PARTS LEGEND:

1. Connector UG-58/U
2. Capacitor, 25 uuf, silver mica, "button"
3. UG-30/U (Amphenol 82-66 or equivalent)
4. Made from Grayhill Type 2.0 test clip, or equivalent
5. UG-260/U
6. Ceramic trimmer N500, or equivalent, 4-30 uuf
7. Dia. .063 wire
8. Low-loss dielectric mtl.
9. Brass, 1 x 1 x .5

INCHES	MM	INCHES	MM
.031	.79	1.156	29.36
.062	1.57	1.375	34.93
.063	1.60	1.812	46.02
.250	6.35	1.843	46.81
.375	9.53	2.000	50.80
.500	12.70	2.242	56.95
.719	18.26	2.406	61.11
.750	19.05	3.625	66.68
1.000	25.40	3.688	92.08
1.078	27.38	4.484	113.89
1.125	28.58		

NOTES:
1. Dimensions are in inches.
2. Metric equivalents (to the nearest .01 mm) are given for general information only and are based upon 1 inch = 25.4 mm.
3. Cover and ends are of same material and same thickness.

FIGURE 3. Diode mixer for noise figure test - Continued.

5. PREPARATION FOR DELIVERY

5.1 Preparation for delivery. Preparation for delivery shall be in accordance with MIL-S-19500.

6. NOTES

6.1 Notes. The notes specified in MIL-S-19500 are applicable to this specification.

6.2 Deleted type. Type 1N82A has been deleted from this specification. The 1N82AG may be substituted for the type 1N82A.

Custodians:
Army - EL
Navy - EC
Air Force - 17

Review activities
Army - MU
Navy - SH
Air Force - 11, 80
DSA - ES

User activities:
Army - MI, SM
Navy - AS, OS, MC, CG
Air Force - 13, 15, 19

Preparing activity:
Army - EL

Agent: DSA - ES

(Project 5961-0195-10)