MILITARY SPECIFICATION

SEMICONDUCTOR DEVICE, TRANSISTOR, PNP, GERMANIUM, LOW-POWER TYPE 2N240

This specification is mandatory for use by all Departments and Agencies of the Department of Defense.

1. SCOPE

1.1 Scope. This specification covers the detail requirements for a low-power, high-speed switching, PNP, germanium transistor.

1.2 Physical dimensions. See figure 1.

1.3 Maximum ratings.

P_T 1/ $T_A = 25°C$	I_C	V_{CBO}	V_{EBO}	V_{CEO}	T_{stg}	T_j
mW	mAdc	Vdc	Vdc	Vdc	°C	°C
25	-15	-6.0	-6.0	-6.0	-65 to +85	+85

1/ Derate linearly 0.416 mW/°C for $T_A > 25°C$.

1.4 Primary electrical characteristics.

Limits	h_{FE} $V_{CE} = -3.0$ Vdc $I_C = -0.5$ mAdc	h_{fe} $V_{CE} = -3.0$ Vdc $I_C = -0.5$ mAdc f = 5 MHz	$V_{CE}(sat)$ $I_C = -8.0$ mAdc $I_B = -2.5$ mAdc	C_{obo} $V_{CB} = -3.0$ Vdc $I_E = 0$
			Vdc	pf
Min	16	5	---	---
Max	100	---	-0.1	6.0

2. APPLICABLE DOCUMENTS

2.1 The following documents, of the issue in effect on date of invitation for bids or request for proposal, form a part of the specification to the extent specified herein.

SPECIFICATION

MILITARY

MIL-S-19500 - Semiconductor Devices, General Specification for.

STANDARDS

MILITARY

MIL-STD-202 - Test Methods for Electronic and Electrical Component-Parts.
MIL-STD-750 - Test Methods for Semiconductor Devices.

(Copies of specifications, standards, drawings, and publications required by suppliers in connection with specific procurement functions should be obtained from the procuring activity or as directed by the contracting officer.)

3. REQUIREMENTS

3.1 General. Requirements shall be in accordance with MIL-S-19500, and as specified herein.

3.2 Abbreviations, symbols, and definitions. The abbreviations, symbols, and definitions used herein are defined in MIL-S-19500, and as follows:

K'_s - - - - - - - - Hole-storage constant

$r_b'C_c$ - - - - - - - Collector-base time constant

3.3 Design, construction, and physical dimensions. Transistor shall be of the design, construction, and physical dimensions shown on figure 1.

3.3.1 Terminal-lead length. Terminal-lead length(s) other than that specified on figure 1 may be furnished under contract or order (see 6.2) where the devices covered herein are required directly for particular equipment-circuit installation or for automatic-assembly-technique programs. Where other lead lengths are required and provided, it shall not be construed as adversely affecting the Qualified-product status of the device, or applicable JAN marking.

3.4 Performance characteristics. Performance characteristics shall be as specified in tables I, II, and III.

3.5 Marking. The following marking specified in MIL-S-19500 may be omitted from the body of the transistor at the option of the manufacturer:

(a) Country of origin.
(b) Manufacturer's identification.

4. QUALITY ASSURANCE PROVISIONS

4.1 Sampling and inspection. Sampling and inspection shall be in accordance with MIL-S-19500, and as specified herein.

4.2 Qualification inspection. Qualification inspection shall consist of the examinations and tests specified in tables I, II, and III.

4.3 Quality conformance inspection. Quality conformance inspection shall consist of groups A, B, and C inspections. When specified in the contract or order, one copy of the quality conformance inspection data, pertinent to the device inspection lot, shall be supplied with each shipment (see 6.2).

4.3.1 Group A inspection. Group A inspection shall consist of the examinations and tests specified in table I.

4.3.2 Group B inspection. Group B inspection shall consist of the examinations and tests specified in table II.

4.3.3 Group C inspection. Group C inspection shall consist of the examinations and tests specified in table III. This inspection shall be conducted on the initial lot and thereafter every 6 months during production.

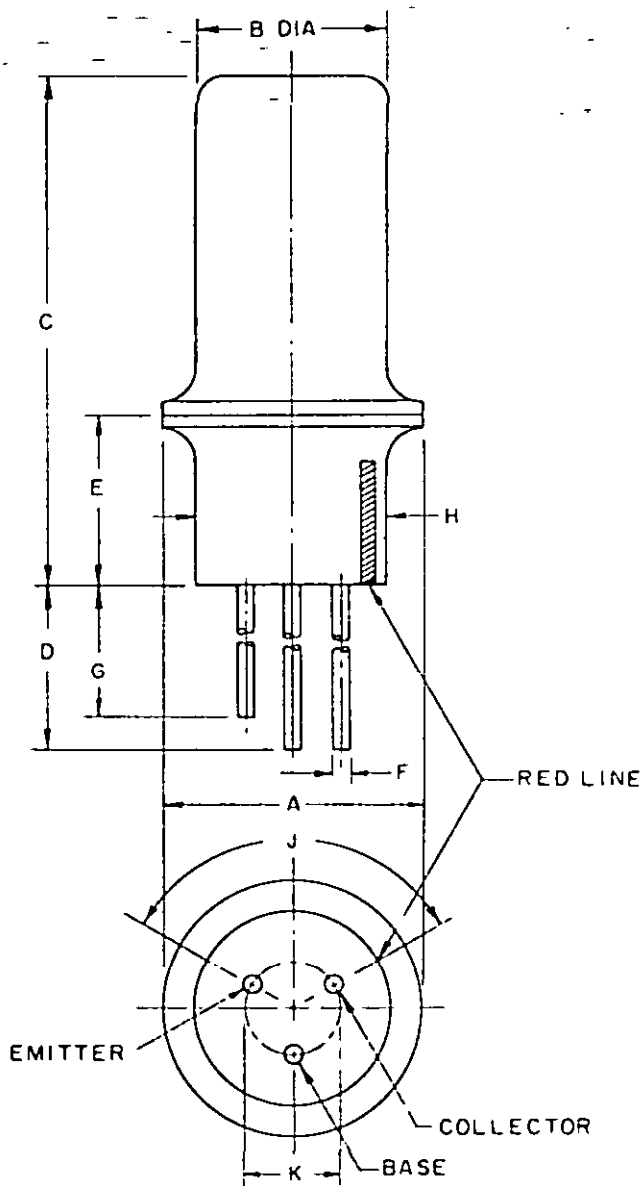

LTR	DIMENSIONS INCHES MIN	INCHES MAX	MILLIMETERS MIN	MILLIMETERS MAX	NOTES
A	.195	.230	4.95	5.84	
B	.155	.180	3.94	4.57	
C	.375	.475	9.53	12.07	
D	1.500	1.750	38.10	44.45	
E		.160		4.06	2
F	.016	.019	.41	.48	3,4
G	1.450	1.638	36.83	41.61	
H	.155	.180	3.94	4.57	
J	120° Nom				
K	.070 Nom		1.78 Nom		

NOTES:
1. Metric equivalents (to the nearest .01 mm) are given for general information only and are based upon 1 inch = 25.4 mm.
2. Flange position not controlled within this range.
3. All leads electrically isolated from case.
4. All three leads.

FIGURE 1. Physical dimensions of transistor type 2N240.

4.3.4 Group B and Group C life-test samples. Samples that have been subjected to group B, 340-hours life-test, may be continued on test to 1,000 hours in order to satisfy group C life-test requirements. These samples shall be predesignated, and shall remain subjected to the group C 1,000 hour acceptance evaluation after they have passed the group B, 340-hour acceptance criteria. The cumulative total of failures found during 340-hour test and during the subsequent interval up to 1,000 hours shall be computed for 1,000-hour acceptance criteria (see 4.3.3).

4.4 Methods of examination and test. Methods of examination and test shall be as specified in tables I, II, and III, and as follows:

4.4.1 Pulse measurements. Conditions for pulse measurement shall be as specified in section 4 of MIL-STD-750.

TABLE I. Group A inspection

Examination or test	MIL-STD-750		LTPD		Limits		
	Method	Details		Symbol	Min	Max	Unit
Subgroup 1			10				
Visual and mechanical examination	2071			---	---	---	---
Subgroup 2			7				
Breakdown voltage, collector to base	3001	Bias cond. D; I_C = -100 μAdc		BV_{CBO}	-6	---	Vdc
Breakdown voltage, collector to emitter	3011	Bias cond. D; I_C = -1.0 mAdc		BV_{CEO}	-6	---	Vdc
Breakdown voltage, emitter to base	3026	Bias cond. D; I_E = -100 μAdc		BV_{EBO}	-6	---	Vdc
Collector to base cutoff current	3036	Bias cond. D; V_{CB} = -6.0 Vdc		I_{CBO}	---	-10	μAdc
Emitter to base cutoff current	3061	Bias cond. D; V_{EB} = -6.0 Vdc		I_{EBO}	---	-10	μAdc
Subgroup 3			7				
Forward-current transfer ratio	3076	V_{CE} = -3.0 Vdc; I_C = -0.5 mAdc; pulsed (see 4.4.1)		h_{FE}	16	100	---
Collector to emitter voltage (saturated)	3071	I_C = -2.0 mAdc; I_B = -0.3 mAdc		$V_{CE}(sat)$	---	-0.07	Vdc
Collector to emitter voltage (saturated)	3071	I_C = -8.0 mAdc I_B = -2.5 mAdc		$V_{CE}(sat)$	---	-0.1	Vdc
Base emitter voltage (saturated)	3066	Test cond. A; I_C = -2.0 mAdc; I_B = -0.3 mAdc		$V_{BE}(sat)$	---	-0.5	Vdc
Base emitter voltage (saturated)	3066	Test cond. A; I_C = -8.0 mAdc; I_B = -2.5 mAdc		$V_{BE}(sat)$	---	-1.0	Vdc

TABLE I. Group A inspection - Continued

Examination or test	MIL-STD-750		LTPD		Limits		
	Method	Details		Symbol	Min	Max	Unit
Subgroup 4			10				
Small-signal short-circuit forward-current transfer ratio	3306	V_{CE} = -3.0 Vdc; I_C = -0.5 mAdc; f = 5 MHz		h_{fe}	5	---	---
Open circuit output capacitance	3236	V_{CB} = -3.0 Vdc; I_E = 0		C_{obo}	---	6.0	pf
Subgroup 5			15				
Reach through voltage	---	V_{EB} = -1 Vdc		V_{RT}	-6	---	Vdc
Hole-storage factor	---	I_B = -1 mAdc (see figure 2)		K'_s	---	120	nsec
Collector-base time constant	---	V_{CB} = -3.0 Vdc; I_E = -0.5 mAdc; f = 4 MHz (see figure 3)		$r_b'C_c$	---	1500	psec
Subgroup 6			15				
High-temperature operation:		T_A = +55° C					
Collector to base cutoff current	3036	Bias cond. D; V_{CB} = -3.0 Vdc		I_{CBO}	---	-15	µAdc
Low-temperature operation:		T_A = -55° C					
Forward-current transfer ratio	3076	V_{CE} = -3.0 Vdc; I_C = -0.5 mAdc; pulsed (see 4.4.1)		h_{FE}	8	---	---

TABLE II. Group B inspection

Examination or test	MIL-STD-750		LTPD		Limits		
	Method	Details		Symbol	Min	Max	Unit
Subgroup 1			20				
Physical dimensions	2066	(See figure 1)		---	---	---	---
Subgroup 2			15				
Solderability	2026			---	---	---	---
Thermal shock (temperature cycling)	1051	Test cond. B except step 3 +85° C		---	---	---	---
Thermal shock (glass strain)	1056	Test cond. A		---	---	---	---
Seal (leak-rate)	---	MIL-STD-202, method 112, test cond. C, procedure III; test cond. B for gross leaks		---	---	1×10^{-7}	atm cc/sec
Moisture resistance	1021			---	---	---	---

2062

TABLE II. Group B inspection -Continued

Examination or test	MIL-STD-750 Method	MIL-STD-750 Details	LTPD	Symbol	Limits Min	Limits Max	Unit
Subgroup 2 - Continued							
End points:							
Collector to base cutoff current	3036	Bias cond. D: V_{CB} = -6.0 Vdc		I_{CBO}	---	-10	μAdc
Collector to emitter voltage (saturated)	3071	I_C = -8.0 mAdc; I_B = -2.5 mAdc		$V_{CE(sat)}$	---	-0.1	Vdc
Forward-current transfer ratio	3076	V_{CE} = -3.0 Vdc; I_C = -0.5 mAdc; pulsed (see 4.4.1)		h_{FE}	16	100	---
Subgroup 3			15				
Shock	2016	Nonoperating: 500 G; 1.0 msec, 5 blows in each orientation: X_1, Y_1, Y_2, and Z_1		---	---	---	---
Vibration fatigue	2046	Nonoperating: 10 G		---	---	---	---
Vibration, variable frequency	2056	10 G		---	---	---	---
Constant acceleration	2006	10,000 G; in each orientation: X_1, Y_1, Y_2 and Z_1		---	---	---	---
End points: (Same as subgroup 2)							
Subgroup 4			15				
Terminal strength (lead fatigue)	2036	Test cond. E		---	---	---	---
Subgroup 5			15				
Salt atmosphere (corrosion)	1041			---	---	---	---
End points: (Same as subgroup 2)							
Subgroup 6			5				
High-temperature life (nonoperating)	1031	T_{stg} = +85°C; t = 340 hours (see 4.3.4)		---	---	---	---
End points:							
Collector to base cutoff current	3036	Bias cond. D: V_{CB} = -6.0 Vdc		I_{CBO}	---	-20	μAdc
Collector to emitter voltage (saturated)	3071	I_C = -8.0 mAdc; I_B = -2.5 mAdc		$V_{CE(sat)}$	---	-0.1	Vdc
Forward-current transfer ratio	3076	V_{CE} = -3.0 Vdc; I_C = -0.5 mAdc; pulsed (see 4.4.1)		h_{FE}	12	---	---

TABLE II. Group B inspection - Continued

Examination or test	MIL-STD-750		LTPD		Limits		
	Method	Details		Symbol	Min	Max	Unit
Subgroup 7			7				
Steady-state operation life	1026	T_A = 25°C; P_T = 25 mW; V_{CB} = -2.5 Vdc; t = 340 hours (see 4.3.4)		---	---	---	---
End points: (Same as subgroup 6)							

TABLE III. Group C inspection

Examination or test	MIL-STD-750		LTPD		Limits		
	Method	Details		Symbol	Min	Max	Unit
Subgroup 1			λ = 7				
High-temperature life (nonoperating)	1031	T_{stg} = +85°C (see 4.3.4)		---	---	---	---
End points:							
Collector to base cutoff current	3036	Bias cond. D; V_{CB} = -6.0 Vdc		I_{CBO}	---	-20	μAdc
Collector to emitter voltage (saturated)	3071	I_C = -8.0 mAdc; I_B = -2.5 mAdc		$V_{CE(sat)}$	---	0.1	Vdc
Forward-current transfer ratio	3076	V_{CE} = -3.0 Vdc; I_C = -0.5 mAdc; pulsed (see 4.4.1)		h_{FE}	12	---	---
Subgroup 2			λ = 10				
Steady-state operation life	1026	T_A = 25°C; P_T = 25 mW; V_{CB} = -2.5 Vdc (see 4.3.4)		---	---	---	---
End points: (Same as subgroup 1)							

5. PREPARATION FOR DELIVERY

5.1 See MIL-S-19500, section 5.

6. NOTES

6.1 Notes. The notes specified in MIL-S-19500 are applicable to this specification.

6.2 Ordering data.

(a) Terminal-lead length if other than specified in figure 1 (see 3.3.1).
(b) Inspection data (see 4.3).

2064

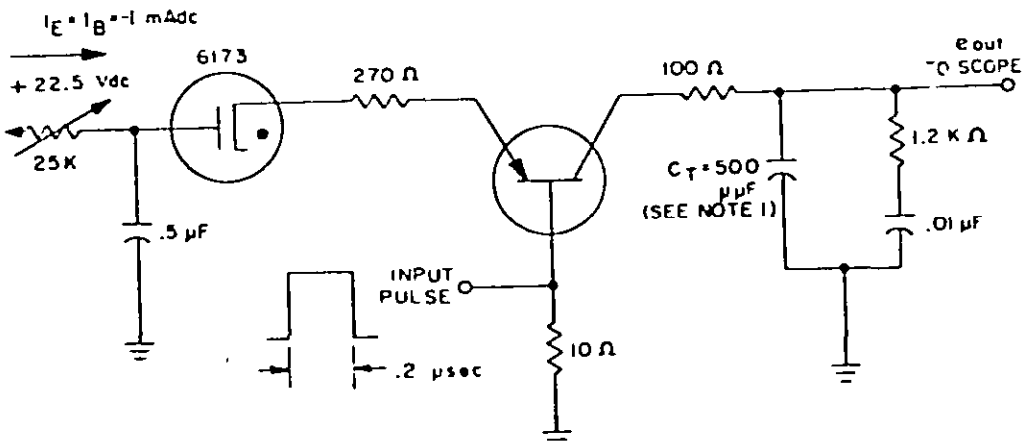

NOTES.
1. C_T includes probe or scope capacitance. This value should be measured with the differentiating network disconnected.
2. $K's = \frac{C_T \text{ e out}}{I_E} = \frac{500 \text{ e out}}{1} \frac{\text{microcoulombs}}{\text{mAdc}}$ (these units are the equivalent of musec).
3. An equivalent circuit may be used.

FIGURE 2. Typical cucuit for K's test.

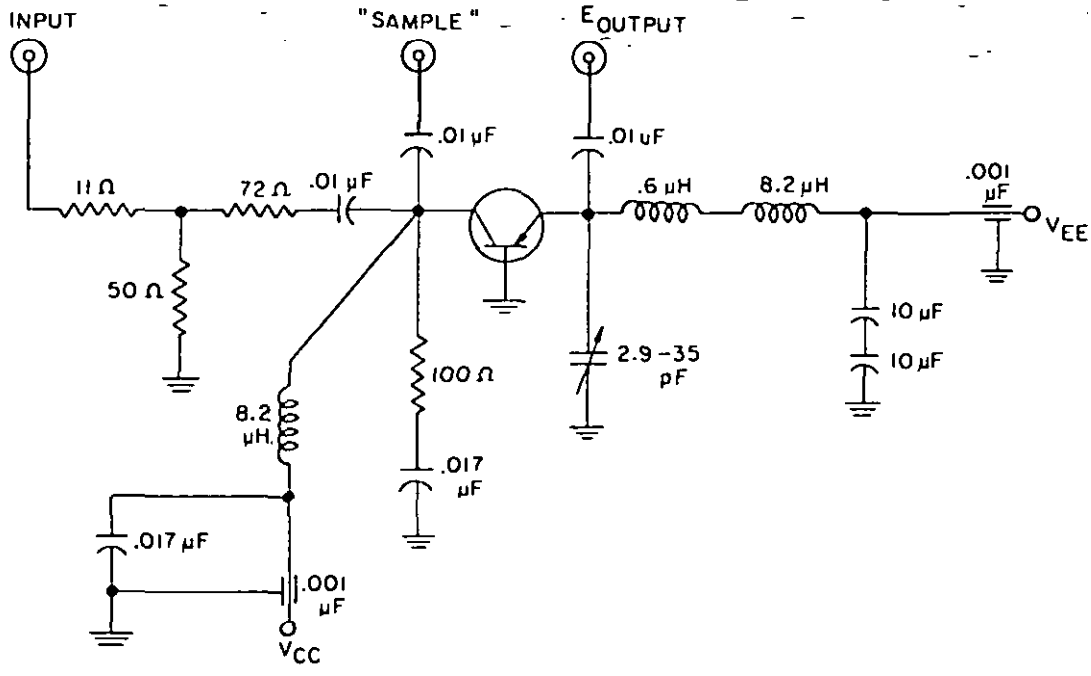

PROCEDURAL NOTES:

1. Connect 4 MHz source to Input jack.
2. Connect *RFVM to Sample jack**.
3. Adjust 4 MHz level so that 1.6 V is read on RFVM.
4. Connect RFVM to Output jack; peak the emitter tuning capacitor on fixture.
5. Return RFVM to Sample jack.
6. Insert transistor into socket, apply bias, and set 4 MHz level for a 1.59 V reading on RFVM.
7. Connect RFVM to Output jack, $r_b'C_c$ is read with 1 mV = 10 psec, 3 mV = 30 psec, etc, (the 1.59 Vin should be checked regularly during successive test measurements).

*RFVM = Boonton type 91CA or equiv; (high impedance); unterminated probe, Boonton type 91-6C adapter or equiv, to be used.

**Adapter BNC UG-491A/U, or equiv, to be used for connections to Input, Sample, and Output jacks.

FIGURE 3. $r_b'C_c$ test circuit.

6.3 CHANGES FROM PREVIOUS ISSUE. THE EXTENT OF CHANGES (DELETIONS, ADDITIONS, ETC.) PRECLUDE THE ANNOTATION OF THE INDIVIDUAL CHANGES FROM THE PREVIOUS ISSUE OF THIS DOCUMENT.

Custodians:
Army - EL
Navy - EC
Air Force - 11

Review activities:
Army - EL, MI
Navy - SH
Air Force - 11, 17, 85
DSA - ES

User activities:
Army - EL, SM
Navy - CG, MC, AS, OS
Air Force - 19

Preparing activity:
Navy - EC

(Project 5961-0008-16)