MIL-S-19500/208B
14 August 1967
SUPERSEDING
MIL-S-19500/208A (EL)
23 October 1964
(See 6.2)

MILITARY SPECIFICATION

SEMICONDUCTOR DEVICE, TRANSISTOR, NPN, SILICON, HIGH-POWER

TYPES 2N1487, 2N1488, 2N1489, AND 2N1490

This specification is mandatory for use by all Departments and Agencies of the Department of Defense.

1. SCOPE

1.1 Scope. This specification covers the detail requirements for a silicon, NPN, high-power transistor.

1.2 Physical dimensions. See figure 1 (TO-3).

1.3 Maximum ratings.

P_C 1/ $T_C = 25°C$	V_{CBO}		V_{EBO}	V_{CEO}		V_{CEX}		I_C	I_B	T_{stg}	θ_{J-C}	T_J
	2N1487 2N1489	2N1488 2N1490		2N1487 2N1489	2N1488 2N1490	2N1487 2N1489	2N1488 2N1490					
W	Vdc	Vdc	Vdc	Vdc	Vdc	Vdc	Vdc	Adc	Adc	°C	°C/W	°C
75	60	100	10	40	55	60	100	6	3	-65 to +200	2.33	+200

1/ Derate linearly 0.429 W/°C for $T_C > 25°C$.

1.4 Primary electrical characteristics.

	h_{FE} 1/ $V_{CE} = 4.0$ Vdc $I_C = 1.5$ Adc		$V_{CE}(sat)$ 1/ $I_C = 1.5$ Adc		V_{BE} 1/ $V_{CE} = 4.0$ Vdc $I_C = 1.5$ Adc		I_{CBO} $V_{CB} = 30$ Vdc	I_{EBO} $V_{EB} = 10$ Vdc	f_{hfb} $V_{CE} = 12$ Vdc $I_C = 100$ mAdc
			$I_B = 300$ mAdc	$I_B = 100$ mAdc					
	2N1487 2N1488	2N1489 2N1490	2N1487 2N1488	2N1489 2N1490	2N1487 2N1488	2N1489 2N1490			
			Vdc	Vdc	Vdc	Vdc	μAdc	μAdc	kc
Min	15	25	---	---	---	---	---	---	500
Max	45	75	3.0	1.0	3.0	2.0	25	25	---

1/ Pulsed (see 4.4.1).

2. APPLICABLE DOCUMENTS

2.1 The following documents, of the issue in effect on date of invitation for bids or request for proposal, form a part of the specification to the extent specified herein.

SPECIFICATION

MILITARY

MIL-S-19500 - Semiconductor Devices, General Specification for.

STANDARDS

MILITARY

MIL-STD-202 - Test Methods for Electronic and Electrical Component Parts.
MIL-STD-750 - Test Methods for Semiconductor Devices.

(Copies of specifications, standards, drawings, and publications required by suppliers in connection with specific procurement functions should be obtained from the procuring activity or as directed by the contracting officer.)

3. REQUIREMENTS

3.1 General. Requirements shall be in accordance with MIL-S-19500, and as specified herein.

3.2 Abbreviations, symbols, and definitions. The abbreviations, symbols, and definitions used herein are defined in MIL-S-19500.

3.3 Design, construction, and physical dimensions. The transistors shall be of the design, construction, and physical dimensions shown on figure 1.

3.4 Performance characteristics. Performance characteristics shall be as specified in tables I, II, and III.

3.5 Marking. The following marking specified in MIL-S-19500 may be omitted from the body of the transistor at the option of the manufacturer:

(a) Country of origin.
(b) Manufacturer's identification.

4. QUALITY ASSURANCE PROVISIONS

4.1 Sampling and inspection. Sampling and inspection shall be in accordance with MIL-S-19500, and as specified herein.

4.2 Qualification inspection. Qualification inspection shall consist of the examinations and tests specified in tables I, II, and III.

4.3 Quality conformance inspection. Quality conformance inspection shall consist of groups A, B, and C inspections.

4.3.1 Group A inspection. Group A inspection shall consist of the examinations and tests specified in table I.

4.3.2 Group B inspection. Group B inspection shall consist of the examinations and tests specified in table II.

4.3.3 Group C inspection. Group C inspection shall consist of the examinations and tests specified in table III. This inspection shall be conducted on the initial lot and thereafter every 6 months during production.

4.3.4 Group B and group C life-test samples. Samples that have been subjected to group B, 340-hours life-test, may be continued on test to 1000-hours in order to satisfy group C life-test requirements. These samples shall be predesignated, and shall remain subjected to the group C 1,000-hour acceptance evaluation after they have passed the group B, 340-hour acceptance criteria. The cumulative total of failures found during 340-hour test and during the subsequent interval up to 1,000 hours shall be computed for 1,000-hour acceptance criteria.

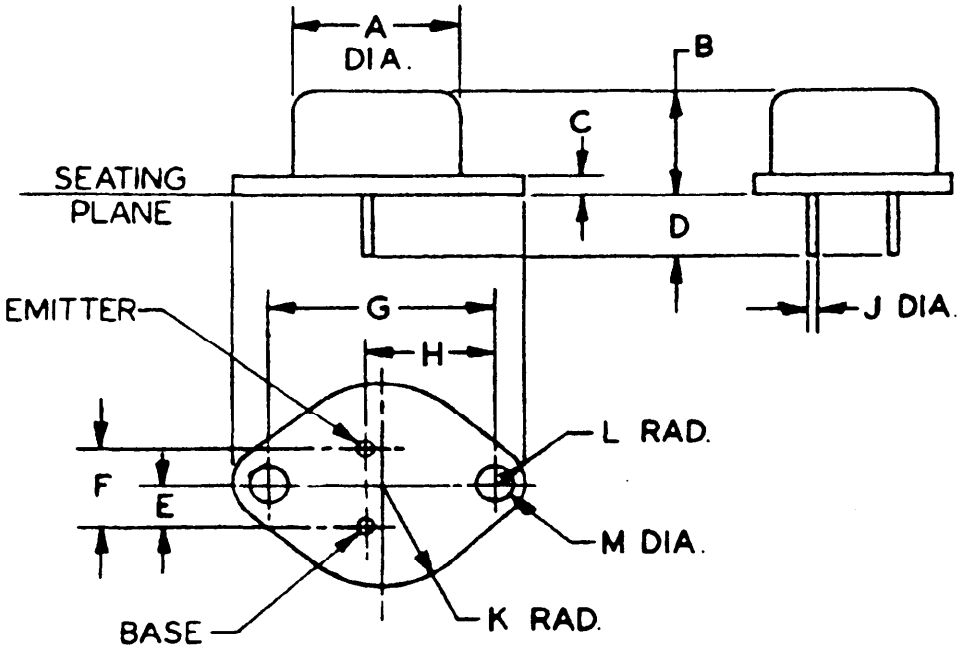

DIMENSIONS					NOTES
LTR	INCHES		MILLIMETERS		
	MIN	MAX	MIN	MAX	
A		.875		22.23	
B	.250	.450	6.35	11.43	
C		.135		3.43	
D	.312		7.92		3
E	.205	.225	5.21	5.72	
F	.420	.440	10.67	11.18	
G	1.177	1.197	29.90	30.40	
H	.665	.675	16.64	17.15	2
J	.038	.043	.97	1.09	3
K		.525		13.34	
L		.188		4.78	
M	.151	.161	3.84	4.09	

NOTES:
1. Metric equivalents (to the nearest .01 mm) are given for general information only and are based upon 1 inch = 25.4 mm.
2. This dimension should be measured at points .050 (1.27 mm) to .055 (1.40 mm) below seating plane. When gage is not used, measurement will be made at seating plane.
3. Two leads.
4. Collector shall be electrically connected to the case.

FIGURE 1. Physical dimensions of transistor types 2N1487, 2N1488, 2N1489 and 2N1490 (TO-3).

4.4 Methods of examination and test. Methods of examination and test shall be as specified in tables I, II, and III.

4.4.1 Pulse measurements. Conditions for pulse measurement shall be as specified in section 4 of MIL-STD-750.

4.4.2 Interval for end-point test measurements. End-point tests shall be completed within the following time limitations, after completion of the last test in the subgroup:

(a) Qualification inspection: within 24 hours.
(b) Quality conformance inspection: within 96 hours.

TABLE I. Group A inspection

Examination or test	MIL-STD-750		LTPD	Symbol	Limits		
	Method	Details			Min	Max	Unit
Subgroup 1			10				
Visual and mechanical examination	2071			---	---	---	---
Subgroup 2			5				
Breakdown voltage, collector to emitter	3011	Bias cond. D; I_C = 100 mAdc; pulsed (see 4.4.1)		BV_{CEO}			
2N1487, 2N1489					40	---	Vdc
2N1488, 2N1490					55	---	Vdc
Breakdown voltage, collector to base	3001	Bias cond. D; I_C = 200 μAdc		BV_{CBO}			
2N1487, 2N1489					60	---	Vdc
2N1488, 2N1490					100	---	Vdc
Breakdown voltage, collector to emitter	3011	Bias cond. A; V_{EB} = 1.5 Vdc; I_C = 0.5 mAdc		BV_{CEX}			
2N1487, 2N1489					60	---	Vdc
2N1488, 2N1490					100	---	Vdc
Collector to base cutoff current	3036	Bias cond. D; V_{CB} = 30 Vdc		I_{CBO}	---	25	μAdc
Emitter to base cutoff current	3061	Bias cond. D; V_{EB} = 10 Vdc		I_{EBO}	---	25	μAdc
Subgroup 3			5				
Forward-current transfer ratio	3076	V_{CE} = 4.0 Vdc; I_C = 1.5 Adc; pulsed (see 4.4.1)		h_{FE}			
2N1487, 2N1488					15	45	---
2N1489, 2N1490					25	75	---

TABLE I. Group A inspection - Continued

Examination or test	MIL-STD-750 Method	MIL-STD-750 Details	LTPD	Symbol	Limits Min	Limits Max	Limits Unit
Subgroup 3 - Continued							
Collector to emitter voltage (saturated)	3071			$V_{CE}(sat)$			
2N1487, 2N1488		I_C = 1.5 Adc; I_B = 300 mAdc; pulsed (see 4.4.1)			---	3.0	Vdc
2N1489, 2N1490		I_C = 1.5 Adc; I_B = 100 mAdc; pulsed (see 4.4.1)			---	1.0	Vdc
Base emitter voltage (nonsaturated)	3066	Test cond. B, V_{CE} = 4.0 Vdc; I_C = 1.5 Adc; pulsed (see 4.4.1)		V_{BE}			
2N1487, 2N1488					---	3.0	Vdc
2N1489, 2N1490					---	2.0	Vdc
Subgroup 4			10				
Small-signal short-circuit forward-current transfer-ratio cutoff frequency	3301	V_{CB} = 12 Vdc; I_C = 100 mAdc		f_{hfb}	500	---	kc
Open-circuit output capacitance	3236	V_{CB} = 10 Vdc; I_E = 0; 100 kHz $\leq f \leq$ 1 MHz		C_{obo}	---	700	pf
Pulse response	3251	Test cond. A; V_{CC} = 12 Vdc; $I_B^{(0)} = I_B^{(2)}$ = 150 mAdc; $I_B^{(1)}$ = 300 mAdc; R_C = 7.8 ohms		$t_{on} + t_{off}$	---	25	µsec
Subgroup 5			15				
High-temperature operation:		T_A = +175°C					
Collector to base cutoff current	3036	Bias cond. D; V_{CB} = 30 Vdc		I_{CBO}	---	1.0	mAdc
Low-temperature operation:		T_A = -55°C					
Forward-current transfer ratio	3076	V_{CE} = 4.0 Vdc; I_C = 1.5 Adc; pulsed (see 4.4.1)		h_{FE}			
2N1487, 2N1488					10	---	---
2N1489, 2N1490					15	---	---

TABLE II. Group B inspection

Examination or test	MIL-STD-750		LTPD	Symbol	Limits		
	Method	Details			Min	Max	Unit
Subgroup 1			20				
Physical dimensions	2066	(See figure 1)		---	---	---	---
Subgroup 2			15				
Solderability	2026	Omit aging; dwell time = 10 ±1 sec		---	---	---	---
Thermal shock (temperature cycling)	1051	Test cond. C		---	---	---	---
Thermal shock (glass strain)	1056	Test cond. B		---	---	---	---
Terminal strength (tension)	2036	Test cond. A; weight = 10 lbs; time = 15 sec		---	---	---	---
Terminal strength (lead torque)	2036	Test cond. D1; torque = 6 in-oz; time = 15 sec		---	---	---	---
Seal (leak-rate)	---	MIL-STD-202, method 112, test cond. C, procedure III; test cond. A for gross leaks		---	---	$5x10^{-7}$	atm cc/sec
Moisture resistance	1021	Omit initial conditioning		---	---	---	---
End points: (See 4.4.2.)							
Collector to base cutoff current	3036	Bias cond. D; V_{CB} = 30 Vdc		I_{CBO}	---	25	μAdc
Forward-current transfer ratio	3076	V_{CE} = 4.0 Vdc; I_C = 1.5 Adc		h_{FE}			
2N1487, 2N1488					15	45	---
2N1489, 2N1490					25	75	---
Subgroup 3			10				
Shock	2016	Nonoperating; 500 G, 1.0 msec, 5 blows in each orientation: X_1, Y_1, Y_2, and Z_1		---	---	---	---
Vibration fatigue	2046	Nonoperating		---	---	---	---
Vibration, variable frequency	2056			---	---	---	---
Constant acceleration	2006	5000 G in each orientation: X_1, Y_1, Y_2, and Z_1		---	---	---	---
End points:							
(Same as for subgroup 2)							

TABLE II. Group B inspection - Continued

Examination or test	MIL-STD-750		LTPD	Symbol	Limits		
	Method	Details			Min	Max	Unit
Subgroup 4			20				
Salt atmosphere (corrosion)	1041			---	---	---	---
End points:							
(Same as for subgroup 2)							
Subgroup 5			10				
Burnout by pulsing	3005	Prepulse cond.: $T_A = 25°C$; $V_{CE} = 0$; $I_C = 0$					
		Pulse cond.: $T_A = 25°C$; $t_p = 1$ sec; test cycles = 1					
Test #1		$V_{CE} = 12.5$ Vdc;					
(All types)		$I_C = 6.0$ Adc		---	---	---	---
Test #2		$V_{CE} = 40$ Vdc;					
2N1487, 2N1489		$I_C = 1.875$ Adc		---	---	---	---
Test #3		$V_{CE} = 55$ Vdc;					
2N1488, 2N1490		$I_C = 1.36$ Adc		---	---	---	---
End points:							
(Same as for subgroup 2)							
Subgroup 6			10				
Clamped-inductive sweep test	---	(See figure 2)		---	---	---	---
Unclamped-inductive sweep test	---	(See figure 3 and 4)		---	---	---	---
End points:							
(Same as for subgroup 2)							
Subgroup 7			7				
High-temperature life (nonoperating)	1031	$T_{stg} = +200°$ C; time = 340 hours (see 4.3.4)		---	---	---	---
End points: (See 4.4.2.)							
Collector to base cutoff current	3036	Bias cond. D; $V_{CB} = 30$ Vdc		I_{CBO}	---	50	μAdc
Forward-current transfer ratio	3076	$V_{CE} = 4.0$ Vdc; $I_C = 1.5$ Adc		h_{FE}			
2N1487, 2N1488					10	70	---
2N1489, 2N1490					18	115	---

TABLE II. Group B inspection - Continued

Examination or test	MIL-STD-750		LTPD	Symbol	Limits		
	Method	Details			Min	Max	Unit
Subgroup 8			10				
Steady-state operation life	1026	100° C $\leq T_C \leq$ 125° C; V_{CE} = 24 Vdc; $P_C = 32\ W + \frac{125°\ C - T_C}{2.33°\ C/W}$ time = 340 hours (see 4.3.4)		---	---	---	---
End points: (Same as for subgroup 7)							

TABLE III. Group C inspection

Examination or test	MIL-STD-750		LTPD	Symbol	Limits		
	Method	Details			Min	Max	Unit
Subgroup 1			20				
Barometric pressure, reduced (altitude operation)	1001	Pressure = 8 mm Hg, normal mounting; time = 1 minute		---	---	---	---
Measurement during above test:							
Collector to base cutoff current	3036	Bias cond. D		I_{CBO}			
2N1487, 2N1489		V_{CB} = 60 Vdc			---	200	μAdc
2N1488, 2N1490		V_{CB} = 100 Vdc			---	200	μAdc
Thermal resistance (junction to case)	3151			θ_{J-C}	---	2.33	°C/W
Subgroup 2			λ=10				
High-temperature life (nonoperating)	1031	T_{stg} = +200° C (see 4.3.4)					
End points: (See 4.4.2.)							
Collector to base cutoff current	3036	Bias cond. D; V_{CB} = 30 Vdc		I_{CBO}	---	50	μAdc
Forward-current transfer ratio	3076	V_{CE} = 4.0 Vdc; I_C = 1.5 Adc		h_{FE}			
2N1487, 2N1488					10	70	---
2N1489, 2N1490					18	115	---
Subgroup 3			λ = 10				
Steady-state operation life	1026	100° C $\leq T_C \leq$ 125°C; V_{CE} = 24 Vdc; $P_C = 32\ W + \frac{125°\ C - T_C}{2.33°\ C/W}$ (see 4.3.4)		---	---	---	---
End points: (Same as for subgroup 2)							

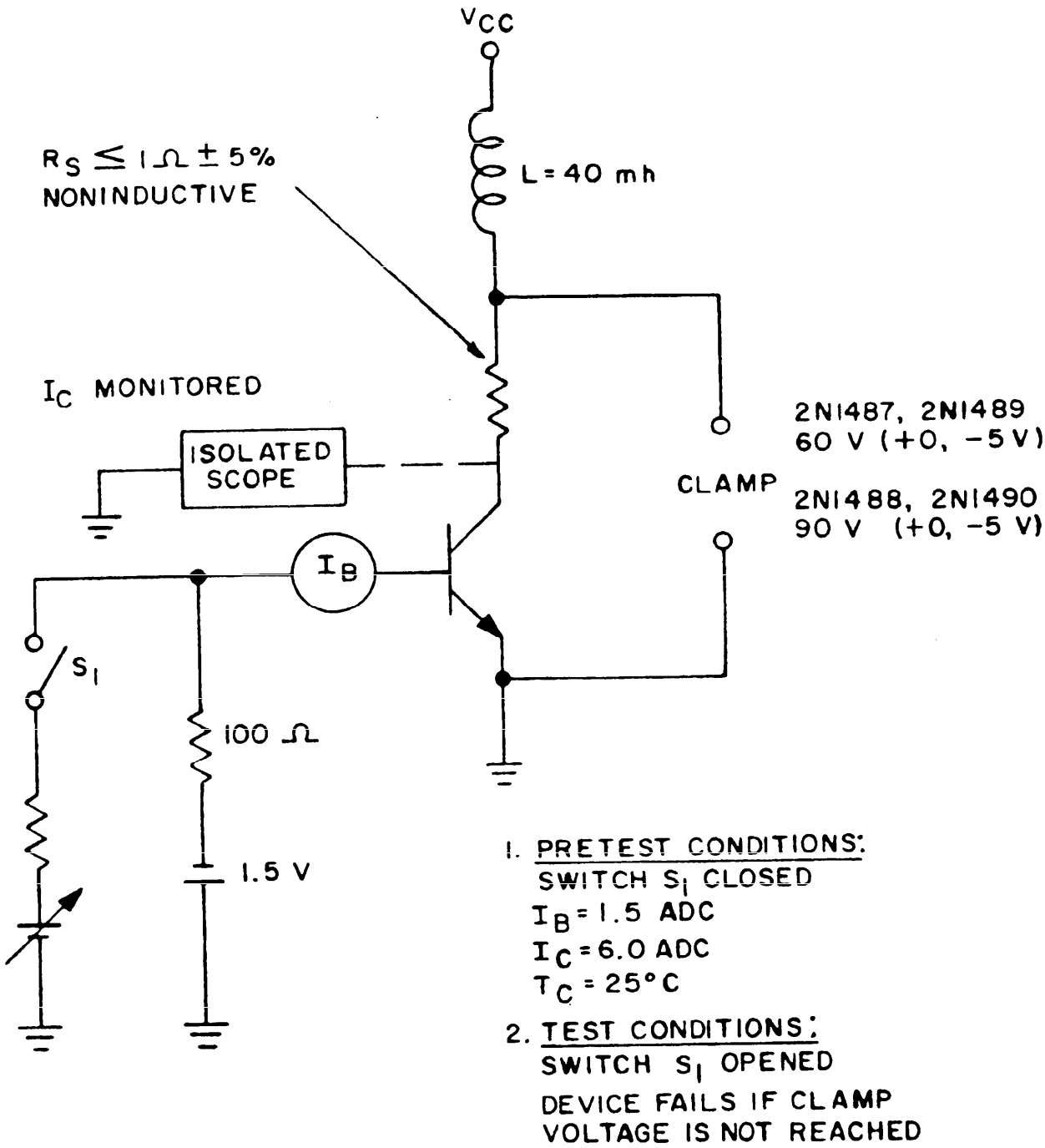

FIGURE 2. Clamped-inductive sweep test circuit.

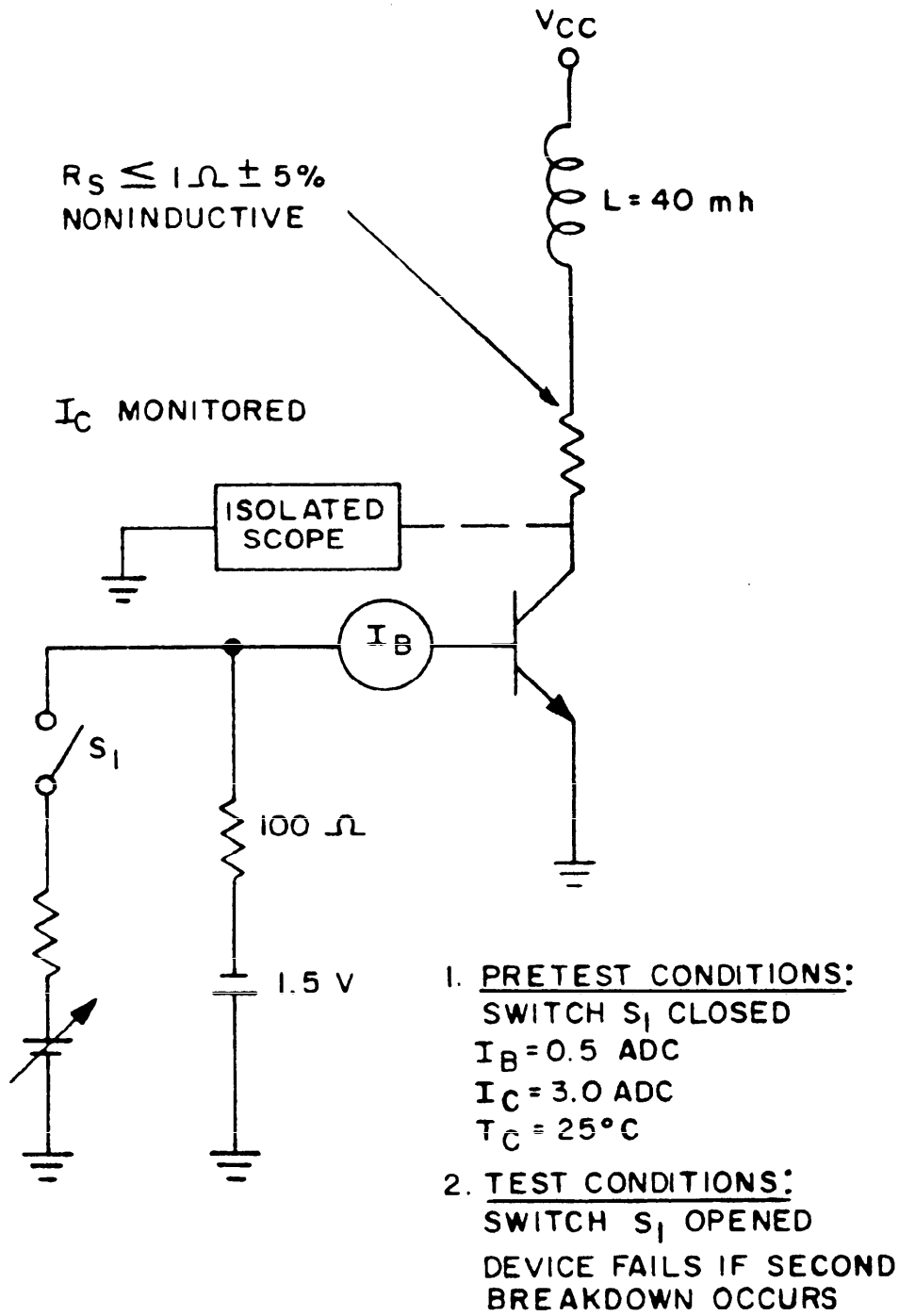

FIGURE 3. Unclamped-inductive sweep test circuit.

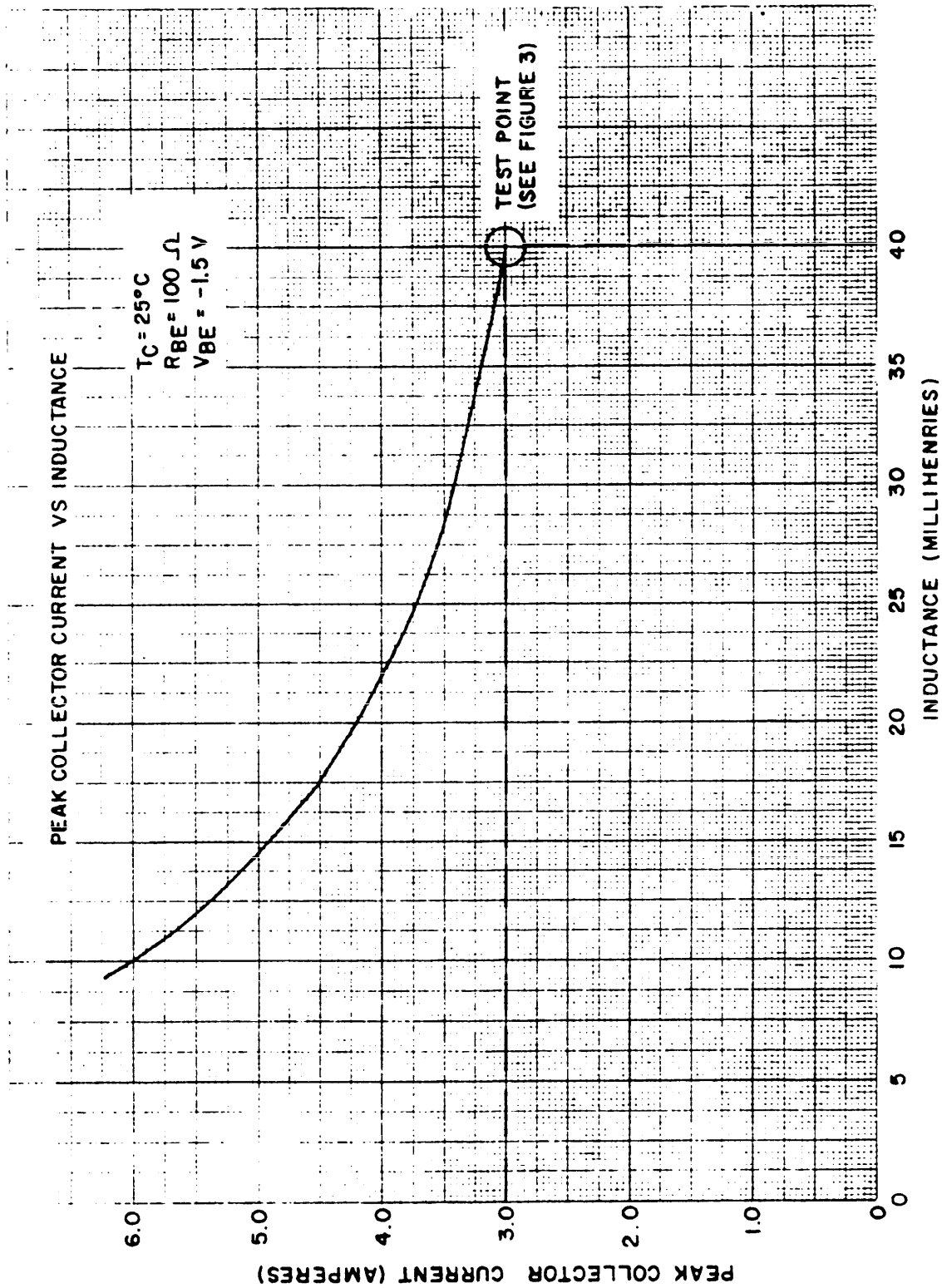

FIGURE 4. Unclamped inductive sweep test curve.

5. PREPARATION FOR DELIVERY

5.1 See MIL-S-19500, section 5.

6. NOTES

6.1 Notes. The notes specified in MIL-S-19500 are applicable to this specification.

6.2 Types covered by superseded specification. Transistor types 2N1511 through 2N1514 have been deleted from this specification. These types (TO-36 case) are no longer manufactured. Transistor types 2N1487 through 2N1490, respectively, are electrically interchangeable with the deleted types and, with suitable mounting modifications, may be used as replacement items. Types having the "USA" prefix are interchangeable with those of corresponding type designation.

6.2.1 Disposition of deleted types. Types 2N1511 through 2N1514, as specified in the superseded specification, may be issued until present stock is depleted.

6.3 Changes from previous issue. Asterisks are not used in this revision to identify changes with respect to the previous issue, due to the extensiveness of the changes.

Custodians:
Army - EL
Navy - SH
Air Force - 11

Review activities:
Army - EL, MU, MI
Navy - SH
Air Force - 11, 17, 85

User activities:
Army - EL, SM
Navy - CG, MC, AS, OS
Air Force - 19

Preparing activity:
Army - EL

(Project 5961-0009-3)

Code "C"

*U.S. GOVERNMENT PRINTING OFFICE 1987-201-512/1727

To detach this form, cut along this line

SPECIFICATION ANALYSIS SHEET

Form Approved
Budget Bureau No. 119-R004

INSTRUCTIONS

This sheet is to be filled out by personnel either Government or contractor, involved in the use of the specification in procurement of products for ultimate use by the Department of Defense. This sheet is provided for obtaining information on the use of this specification which will insure that suitable products can be procured with a minimum amount of delay and at the least cost. Comments and the return of this form will be appreciated. Fold on lines on reverse side, staple in corner, and send to preparing activity.

SPECIFICATION

ORGANIZATION	CITY AND STATE

CONTRACT NO.	QUANTITY OF ITEMS PROCURED	DOLLAR AMOUNT
		$

MATERIAL PROCURED UNDER A

☐ DIRECT GOVERNMENT CONTRACT ☐ SUBCONTRACT

1. HAS ANY PART OF THE SPECIFICATION CREATED PROBLEMS OR REQUIRED INTERPRETATION IN PROCUREMENT USE?

A. GIVE PARAGRAPH NUMBER AND WORDING.

B. RECOMMENDATIONS FOR CORRECTING THE DEFICIENCIES

2. COMMENTS ON ANY SPECIFICATION REQUIREMENT CONSIDERED TOO RIGID

3. IS THE SPECIFICATION RESTRICTIVE?

☐ YES ☐ NO IF "YES", IN WHAT WAY?

4. REMARKS *(Attach any pertinent data which may be of use in improving this specification. If there are additional papers, attach to form and place both in an envelope addressed to preparing activity)*

SUBMITTED BY *(Printed or typed name and activity)*	DATE

DD FORM 1 OCT 64 1426

ESC-PM 2011-66

FOLD

DEPARTMENT OF THE ARMY
HEADQUARTERS
U.S.ARMY ELECTRONICS COMMAND
FORT MONMOUTH, NEW JERSEY 07703

OFFICIAL BUSINESS

POSTAGE AND FEES PAID
DEPARTMENT OF THE ARMY

Commanding General
U. S. Army Electronics Command
ATTN: AMSEL-PP-
Fort Monmouth, New Jersey 07703

FOLD

To detach this form at along this line