MIL-S-19500/20C
22 March 1971
SUPERSEDING
MIL-S-19500/20B
23 October 1964

MILITARY SPECIFICATION

SEMICONDUCTOR DEVICE, TRANSISTOR, PNP, GERMANIUM, LOW-POWER TYPES 2N404 AND 2N404A

This specification is mandatory for use by all Departments and Agencies of the Department of Defense.

1. SCOPE

1.1 Scope. This specification covers the detail requirements for PNP, germanium, low-power transistors.

1.2 Physical dimensions. See figure 1 (TO-5).

1.3 Maximum ratings.

Type	P_T 1/ 2/	V_{CEO} V_{EB} = -1 Vdc	V_{CBO}	V_{EBO}	I_E	I_C	T_{stg}
	mW	Vdc	Vdc	Vdc	mAdc	mAdc	°C
2N404	150	-24	-25	-12	200	-200	-65 to +100
2N404A	150	-35	-40	-25	200	-200	-65 to +100

1/ Derate linearly 2.5 mW/°C for $T_A > 25°C$ for 2N404.
2/ Derate linearly 2.0 mW/°C for $T_A > 25°C$ for 2N404A.

1.4 Primary electrical characteristics.

	h_{FE} V_{CE} = -0.15 Vdc I_C = -12 mAdc	f_{hfb} V_{CB} = -6 Vdc I_E = 1 mAdc	$V_{CE(sat)}$ I_C = -12 mAdc I_B = -0.4 mAdc	C_{obo} V_{CB} = -6 Vdc, I_E = 0 100 kHz $\leq f \leq$ 1 MHz
		MHz	Vdc	pF
Min	30	4	---	---
Max	200	---	-0.15	20

2. APPLICABLE DOCUMENTS

2.1 The following documents, of the issue in effect on date of invitation for bids or request for proposal, form a part of the specification to the extent specified herein.

SPECIFICATION

MILITARY

MIL-S-19500 - Semiconductor Devices, General Specification for.

STANDARDS

MILITARY

MIL-STD-202 - Test Methods for Electronic and Electrical Component Parts.
MIL-STD-750 - Test Methods for Semiconductor Devices.

(Copies of specifications, standards, drawings, and publications required by suppliers in connection with specific procurement functions should be obtained from the procuring activity or as directed by the contracting officer.)

3. REQUIREMENTS

3.1 General. Requirements shall be in accordance with MIL-S-19500, and as specified herein.

3.2 Abbreviations, symbols, and definitions. The abbreviations, symbols, and definitions used herein are defined in MIL-S-19500, and as follows:

Q_{sb} - - - - - - - - - - - - - Stored base charge
pC - - - - - - - - - - - - - Pico-coulombs

3.3 Design, construction, and physical dimensions. Transistors shall be of the design, construction, and physical dimensions shown on figure 1.

3.3.1 Lead material and finish. Lead material shall be Kovar or alloy 52. Lead finish shall be gold-plated. (Leads may be tin-coated if specified in the contract or order, and this requirement shall not be construed as adversely affecting the qualified-product status of the device, or applicable JAN marking (see 6.2)).

3.3.2 Terminal-lead length. Terminal-lead length(s) other than that specified in figure 1 may be furnished when so stipulated in the contract or order (see 6.2) where the devices covered herein are required directly for particular equipment-circuit installation or for automatic-assembly-technique programs. Where other lead lengths are required and provided, it shall not be construed as adversely affecting the qualified-product status of the device, or applicable JAN marking.

3.4 Performance characteristics. Performance characteristics shall be as specified in tables I, II, and III.

3.5 Marking. The following marking specified in MIL-S-19500 may be omitted from the body of the transistor at the option of the manufacturer:

(a) Country of origin.
(b) Manufacturer's identification.

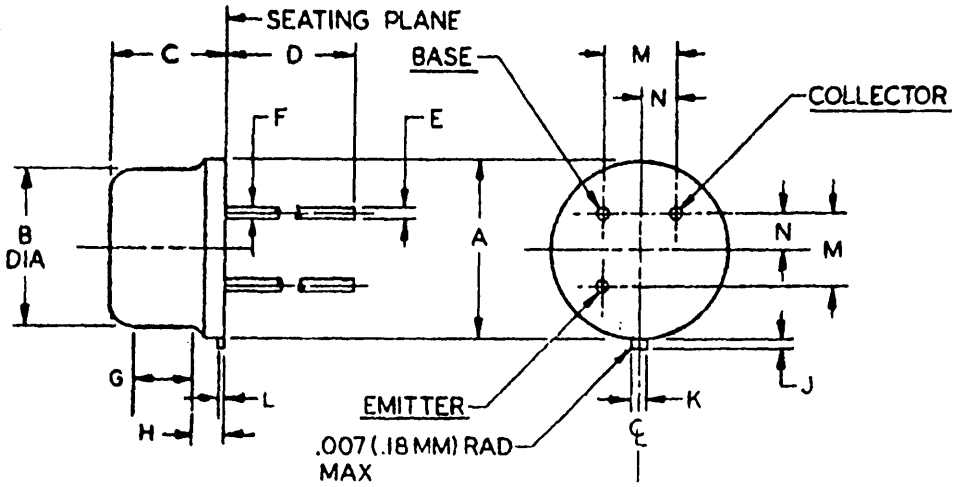

LTR	DIMENSIONS INCHES MIN	INCHES MAX	MILLIMETERS MIN	MILLIMETERS MAX	NOTES
A	.335	.370	8.51	9.40	
B	.305	.335	7.75	8.51	
C	.240	.260	6.10	6.60	
D	1.500	1.750	38.10	44.45	9
E	.016	.021	.41	.53	2,9
F	.016	.019	.41	.48	3,9
G	.100	---	2.54	---	4
H	---	---	---	---	5
J	.029	.045	.74	1.14	8
K	.028	.034	.71	.86	
L	.009	.041	.23	1.04	
M	.1414 Nom		3.59 Nom		6
N	.0707 Nom		1.80 Nom		6

NOTES:
1. Metric equivalents (to the nearest .01 mm) are given for general information only and are based upon 1 inch = 25.4 mm.
2. Measured in the zone beyond .250 (6.35 mm) from the seating plane.
3. Measured in the zone .050 (1.27 mm) and .250 (6.35 mm) from the seating plane.
4. Variations on dimension B in this zone shall not exceed .010 (.25 mm).
5. Outline in this zone is not controlled.
6. When measured in a gaging plane .054+.001, -.000 (1.37+.03, -.00 mm) below the seating plane of the transistor, maximum diameter leads shall be within .007 (.18 mm) of their true location relative to a maximum width tab. Smaller diameter leads shall fall within the outline of the maximum diameter lead tolerance. Figure 2 shows the preferred measured method.
7. All leads electrically isolated from case.
8. Measured from the maximum diameter of the actual device.
9. All 3 leads.

FIGURE 1. Physical dimensions of transistor types 2N404 and 2N404A (TO-5).

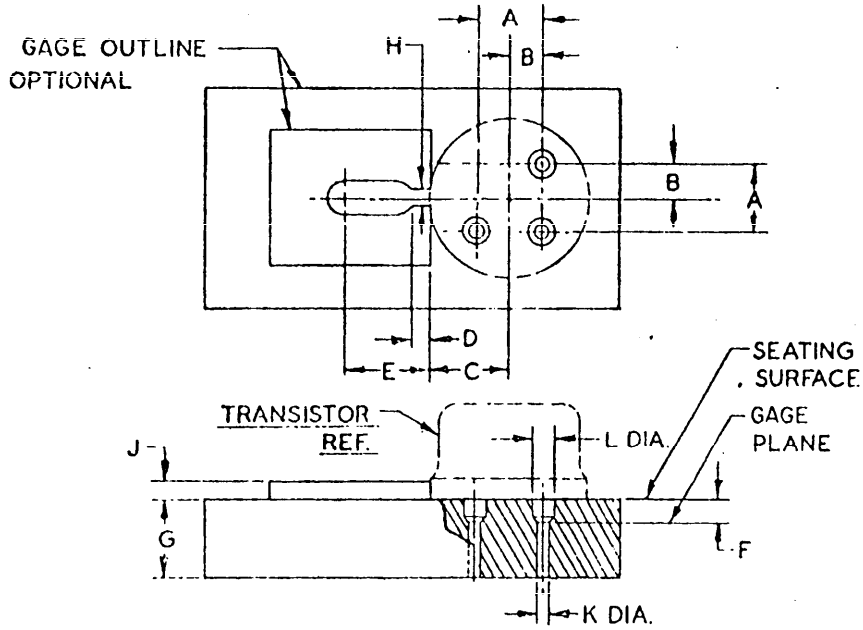

DIMENSIONS				
LTR	INCHES		MILLIMETERS	
	MIN	MAX	MIN	MAX
A	.1409	.1419	3.58	3.60
B	.0702	.0712	1.78	1.81
C	.182	.199	4.62	5.05
D	.009	.011	.23	.28
E	.125 Nom		3.18 Nom	
F	.054	.055	1.37	1.40
G	.372	.378	9.45	9.60
H	.0350	.0355	.89	.90
J	.150 Nom		3.81 Nom	
K	.0325	.0335	.83	.85
L	.0595	.0605	1.51	1.54

NOTES:

1. The following gaging procedure shall be used: The use of a pin straightener prior to insertion in the gage is permissible. The device being measured shall be inserted until its seating plane is .125±.010 (3.18±.25 mm) from the seating surface of the gage. A spacer may be used to obtain the .125 (3.18 mm) distance from the gage seat prior to force application. A force of 8 oz ±.05 oz shall then be applied parallel and symmetrical to the device's cylindrical axis. When examined visually after the force application (the force need not be removed) the seating plane of the device shall be seated against the gage.
2. The location of the tab locator, within the limits of dim C, will be determined by the tab and flange dimension of the device being checked.
3. Metric equivalents (to the nearest .01 mm) are given for general information only and are based upon 1 inch = 25.4 mm.

FIGURE 2. Gage for lead and tab location for transistor types 2N404 and 2N404A.

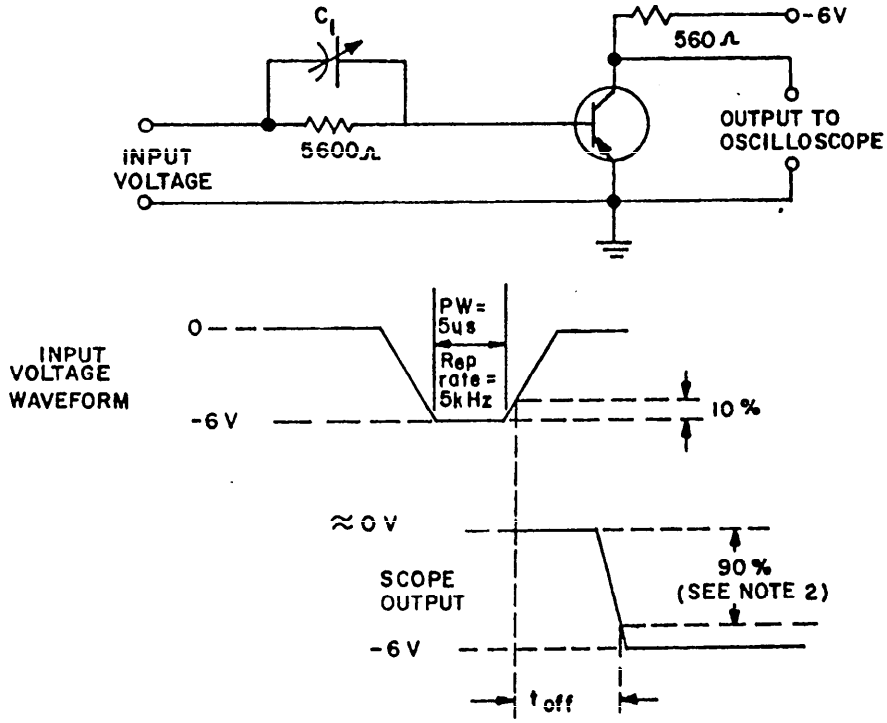

NOTES:
1. The capacitance of C_1 shall be increased until the t_{off} time of the output waveform is decreased to .2μs. Q_{sb} in pC is then calculated by $Q_{sb} = C_1 X E_{in}$ where C_1 is in pF and E_{in} is 6 volts.
2. Any unit that turns on above the 90-percent point, once it starts to turn off, fails the test.

FIGURE 3. Circuit for determining value of stored base charge.

TABLE I. Group A inspection

Examination or test	MIL-STD-750 Method	MIL-STD-750 Details	LTPD	Symbol	Limits Min	Limits Max	Unit
Subgroup 1			10				
Visual and mechanical examination	2071			---	---	---	---
Subgroup 2			3				
Breakdown voltage, collector to base	3001	Bias cond. D; I_C = -20 μAdc		BV_{CBO}			
2N404					-25	---	Vdc
2N404A					-40	---	Vdc
Breakdown voltage, emitter to base	3026	Bias cond. D; I_E = -20 μAdc		BV_{EBO}			
2N404					-12	---	Vdc
2N404A					-25	---	Vdc
Collector to base cutoff current	3036	Bias cond. D; V_{CB} = -12 Vdc		I_{CBO}	---	-5	μAdc
Emitter to base cutoff current	3061	Bias cond. D; V_{EB} = -2.5 Vdc		I_{EBO}	---	-2.5	μAdc
Floating potential	3020	Voltmeter input resistance ≥ 11 megohms		V_{EBF}			
2N404		V_{CB} = -25 Vdc			---	-1	Vdc
2N404A		V_{CB} = -35 Vdc			---	-1	Vdc
Collector to emitter voltage (saturated)	3071	I_C = -12 mAdc; I_B = -0.4 mAdc		$V_{CE}(sat)$	---	-0.15	Vdc
Collector to emitter voltage (saturated)	3071	I_C = -24 mAdc; I_B = -1 mAdc		$V_{CE}(sat)$	---	-0.20	Vdc
Subgroup 3			3				
Forward-current transfer ratio	3076	V_{CE} = -0.15 Vdc; I_C = -12 mAdc		h_{FE}	30	200	---
Forward-current transfer ratio	3076	V_{CE} = -0.2 Vdc; I_C = -24 mAdc		h_{FE}	24	200	---
Base emitter voltage (saturated)	3066	Test cond. A; I_C = -12 mAdc; I_B = -0.4 mAdc		$V_{BE}(sat)$	---	-0.35	Vdc
Base emitter voltage (saturated)	3066	Test cond. A; I_C = -24 mAdc; I_B = -1 mAdc		$V_{BE}(sat)$	---	-0.40	Vdc
Subgroup 4			3				
Small-signal short-circuit forward-current transfer-ratio cutoff frequency	3301	V_{CB} = -6 Vdc; I_E = 1 mAdc		f_{hfb}	4	---	MHz

TABLE I. Group A inspection - Continued

Examination or test	MIL-STD-750 Method	MIL-STD-750 Details	LTPD	Symbol	Limits Min	Limits Max	Unit
Subgroup 4 - Continued							
Open circuit output capacitance	3236	V_{CB} = -6 Vdc; I_E = 0 100 kHz $\leq$ f $\leq$ 1 MHz		C_{obo}	---	20	pF
Input capacitance (output open-circuited)	3240	V_{EB} = -6 Vdc; I_C = 0 100 kHz $\leq$ f $\leq$ 1 MHz		C_{ibo}	---	20	pF
Stored base charge	---	I_C = -10 mAdc; I_B = -1 mAdc (see figure 3)		Q_{sb}	---	1,200	pC
Subgroup 5			10				
High-temperature operation:		T_A = +80°C					
Collector to base cutoff current	3036	Bias cond. D; V_{CB} = -12 Vdc		I_{CBO}	---	-90	µAdc
Low-temperature operation:		T_A = -65°C					
Forward-current transfer ratio	3076	V_{CE} = -0.15 Vdc; I_C = -12 mAdc		h_{FE}	18	---	---

TABLE II. Group B inspection

Examination or test	MIL-STD-750 Method	MIL-STD-750 Details	LTPD	Symbol	Limits Min	Limits Max	Unit
Subgroup 1			20				
Physical dimensions	2066	(See figure 1)		---	---	---	---
Subgroup 2			10				
Solderability	2026			---	---	---	---
Thermal shock (temperature cycling)	1051	Test cond. B, except in step 3, T_A = +85 ±5°C		---	---	---	---
Thermal shock (glass strain)	1056	Test cond. A		---	---	---	---
Moisture resistance	1021			---	---	---	---
End points:							
Forward-current transfer ratio	3076	V_{CE} = -0.15 Vdc; I_C = -12 mAdc		h_{FE}	30	200	---
Collector to base cutoff current	3036	Bias cond. D; V_{CB} = -12 Vdc		I_{CBO}	---	-6	µAdc

TABLE II. Group B inspection - Continued

Examination or test	MIL-STD-750		LTPD	Symbol	Limits		Unit
	Method	Details			Min	Max	
Subgroup 3			10				
Shock	2016	Nonoperating; 1,500 G; 0.5 ms; 5 blows in each orientation: X_1, Y_1, Y_2 and Z_1		---	---	---	---
Vibration, variable frequency	2056			---	---	---	---
Constant acceleration	2006	15,000 G in each orientation: X_1, Y_1, Y_2 and Z_1		---	---	---	---
End points: (Same as subgroup 2)							
Subgroup 4			20				
Terminal strength (lead fatigue)	2036	Test cond. E		---	---	---	---
End points:							
Hermetic seal	1071	Test cond. G or H for fine leaks; test cond. A, C, D, or F for gross leaks		---	---	$1x10^{-7}$	atm cc/s
Subgroup 5			20				
Salt atmosphere (corrosion)	1041			---	---	---	---
Subgroup 6			5				
High-temperature life (nonoperating)	1032	T_{stg} = +100°C time = 340 hours (see 4.3.4)		---	---	---	---
End points:							
Forward-current transfer ratio	3076	V_{CE} = -0.15 Vdc; I_C = -12 mAdc		h_{FE}	24	240	---
Collector to base cutoff current	3036	Bias cond. D; V_{CB} = -12 Vdc		I_{CBO}	---	-10	μAdc
Subgroup 7			5				
Steady-state operation life	1027	P_T = 150 mW; V_{CB} = -10 Vdc time = 340 hours (see 4.3.4)		---	---	---	---
End points: (Same as subgroup 6)							

TABLE III. Group C inspection

Examination or test	MIL-STD-750		LTPD	Symbol	Limits		Unit
	Method	Details			Min	Max	
Subgroup 1			10				
Resistance to solvents	---	MIL-STD-202, Method 215 (see 4.4.1)		---	---	---	----
Subgroup 2			$\lambda = 5$				
High-temperature life (nonoperating)	1031	$T_{stg} = +100°C$ (see 4.3.4)		---	---	---	---
End points: (Same as subgroup 6 of group B)							
Subgroup 3			$\lambda = 5$				
Steady-state operation life	1026	$P_T = 150$ mW $V_{CB} = -10$ Vdc (see 4.3.4)		---	---	---	---
End points: (Same as subgroup 6 of group B)							

4. QUALITY ASSURANCE PROVISIONS

4.1 Sampling and inspection. Sampling and inspection shall be in accordance with MIL-S-19500, and as specified herein.

4.2 Qualification inspection. Qualification inspection shall consist of the examinations and tests specified in tables I, II, and III.

4.3 Quality conformance inspection. Quality conformance inspection shall consist of group A, B, and C inspections.

4.3.1 Group A inspection. Group A inspection shall consist of the examinations and tests specified in table I.

4.3.2 Group B inspection. Group B inspection shall consist of the examinations and tests specified in table II.

4.3.3 Group C inspection. Group C inspection shall consist of the tests specified in table III. This inspection shall be conducted on the initial lot and thereafter every six months during production.

4.3.4 Group B and group C life-test samples. Samples that have been subjected to group B, 340-hours life-test, may be continued on test to 1,000 hours in order to satisfy group C life-test requirements. These samples shall be predesignated, and shall remain subjected to the group C 1,000-hour acceptance evaluation after they have passed the group B, 340-hour acceptance criteria. The cumulative total of failures found during 340-hour test and during the subsequent interval up to 1,000 hours shall be computed for 1,000-hour acceptance criteria, see 4.3.3.

4.4 Methods of examination and test. Methods of examination and test shall be as specified in tables I, II, and III, and as follows:

4.4.1 Resistance to solvents. Transistors shall be subjected to tests in accordance with method 215 of MIL-STD-202. The following details shall apply:

(a) All areas of the transistor body where marking has been applied shall be brushed.
(b) After subjection to the tests there shall be no evidence of mechanical damage to the device and markings shall have remained legible.

5. PREPARATION FOR DELIVERY

5.1 See MIL-S-19500, section 5.

6. NOTES

6.1 Notes. The notes specified in MIL-S-19500 are applicable to this specification.

6.2 Ordering data.

(a) Lead finish if other than gold-plated (see 3.3.1).
(b) Terminal-lead length if other than specified in figure 1 (see 3.3.2).

Custodians:
Army - EL
Navy - EC
Air Force - 17

Review activities:
Army - MU, MI
Air Force - 11, 80
DSA - ES

User activities:
Army - AV, SM
Navy - AS, CG, MC, OS, SH
Air Force - 13, 15, 19

Preparing activity:
Navy - EC

Agent:
DSA - ES

(Project 5961-0227)