MIL-S-19500/173A
24 November 1964
SUPERSEDING
MIL-S-19500/173(NAVY)
7 April 1961

# MILITARY SPECIFICATION

## TRANSISTOR, NPN, SILICON

## TYPES 2N389 AND 2N424

This specification is mandatory for use by all Departments and Agencies of the Department of Defense.

## 1. SCOPE

1.1 Scope. This specification covers the detail requirements for high power, silicon, NPN, transistors, and is in accordance with Specification MIL-S-19500 except as otherwise specified herein.

1.2 Physical dimensions. See figure 1 (TO-53)

1.3 Absolute-maximum ratings:

| $P_T$ 1/ | $V_{CE}$ | | $V_{CB}$ | | $V_{EB}$ | $T_{stg}$ |
|---|---|---|---|---|---|---|
| $T_C$ = 25°C | 2N389 | 2N424 | 2N389 | 2N424 | | |
| (W) | (Vdc) | (Vdc) | (Vdc) | (Vdc) | (Vdc) | (°C) |
| 85 | 60 | 80 | 60 | 80 | 10 | -65 to+200 |

1/ Derate 0.486 W/°C above $T_C$ = 25°C.

1.4 Primary electrical characteristics.

| | $h_{FE}$ | $h_{FE}$ | $V_{CE(sat)}$ | |
|---|---|---|---|---|
| | $I_C$ = 1 Adc<br>$V_{CE}$ = 15Vdc | $I_C$ = 1 Adc<br>$V_{CE}$ = 15 Vdc<br>$T_A$ = -55°C | 2N389 | 2N424 |
| | | | (Vdc) | (Vdc) |
| Min | 15 | 8 | --- | --- |
| Max | 60 | --- | 5 | 10 |

## 2. APPLICABLE DOCUMENTS

2.1 The following documents, of the issue in effect on date of invitation for bids or request for proposal, form a part of this specification to the extent specified herein.

SPECIFICATION

Military

MIL-S-19500 - Semiconductor Devices, General Specification for.

STANDARD

Military

MIL-STD-750 - Test Methods for Semiconductor Devices

(Copies of specifications, standards, drawings, and publications required by suppliers in connection with specific procurement functions should be obtained from the procuring activity or as directed by the contracting officer.)

FSC 5960

3. REQUIREMENTS

3.1 General. Requirements shall be in accordance with Specification MIL-S-19500, and as specified herein.

3.2 Abbreviations, symbols, and definitions. The abbreviations, symbols, and definitions used herein are defined in Specification MIL-S-19500.

3.3 Design and construction. Transistors shall be of the design, construction, and physical dimensions shown on figure 1.

3.4 Performance characteristics. Performance characteristics shall be as specified in tables I, II, and as follows:

3.4.1 Salt atmosphere (corrosion). The transistor shall be examined for evidence of corrosion and legibility of marking before the specified measurements are made (see 4.4.1).

3.5 Marking. The following marking specified in MIL-S-19500 may be omitted from the body of the transistor:

(a) Country of origin
(b) Manufacturer's identification.

4. QUALITY ASSURANCE PROVISIONS

4.1 Sampling and inspection. Sampling and inspection shall be in accordance with MIL-S-19500, and as specified herein.

4.2 Qualification inspection. Qualification inspection shall consist of the examinations and tests specified in tables I and II.

4.3 Quality conformance inspection. Quality conformance inspection shall consist of group A and B inspections.

4.3.1 Group A inspection. Group A inspection shall consist of the examinations and tests specified in table I.

4.3.2 Group B inspection. Group B inspection shall consist of the examinations and tests specified in table II.

4.4 Methods of examination and test. Methods of examination and test shall be as specified in tables I, II, and as follows:

4.4.1 Salt atmosphere. The marking shall be legible after the test. There shall be no evidence (when examined with no magnification) of flaking or pitting of the finish or corrosion that will interfere with the mechanical or electrical application of the device.

4.4.2 Pulse testing. Pulse measurements shall be used in accordance with Section 4 of MIL-STD-750.

4.4.3 Inspection conditions. All measurements are to be made at $T_A$ = 25°C unless otherwise specified.

4.4.4 Test measurement shall be made after thermal equilibrium has been reached at the temperature specified.

5. PREPARATION FOR DELIVERY

5.1 Preparation for delivery and the quality assurance provisions for preparation for delivery shall conform to Specification MIL-S-19500.

| DIMENSIONS | | | | | |
|---|---|---|---|---|---|
| LTR | INCHES | | | MILLIMETERS | |
| | MIN. | NOM. | MAX. | MIN. | MAX. |
| A | .670 | .675 | .680 | 17.02 | 17.27 |
| B | .040 | .050 | .055 | 1.02 | 1.40 |
| C | .035 | .040 | .045 | .89 | 1.14 |
| D | .130 | .140 | .150 | 3.56 Nom | |
| E | .190 | .200 | .210 | 4.83 | 5.33 |
| F | .385 | .400 | .415 | 9.78 | 10.54 |
| G | .370 | .390 | .420 | 9.47 | 10.49 |
| H | .305 | .325 | .345 | 7.75 | 8.76 |
| J | .670 | .680 | .690 | 17.02 | 17.53 |
| K | .330 | .340 | .350 | 8.38 | 8.89 |
| L | .850 | .860 | .870 | 21.59 | 22.10 |
| M | .190 | .200 | .210 | 4.83 | 5.33 |
| N | .096 | .101 | .106 | 2.44 | 2.69 |
| P | .765 | .775 | .785 | 19.43 | 19.94 |
| R | .030 | .048 | .065 | .76 | 1.65 |
| S | .075 | .090 | .105 | 1.91 | 2.67 |
| T | .075 | -- | -- | 1.91 | -- |

NOTES:
1. Metric equivalents are for information only and are based upon 1 inch = 25.4 mm.
2. Lead spacing measured at base seat.

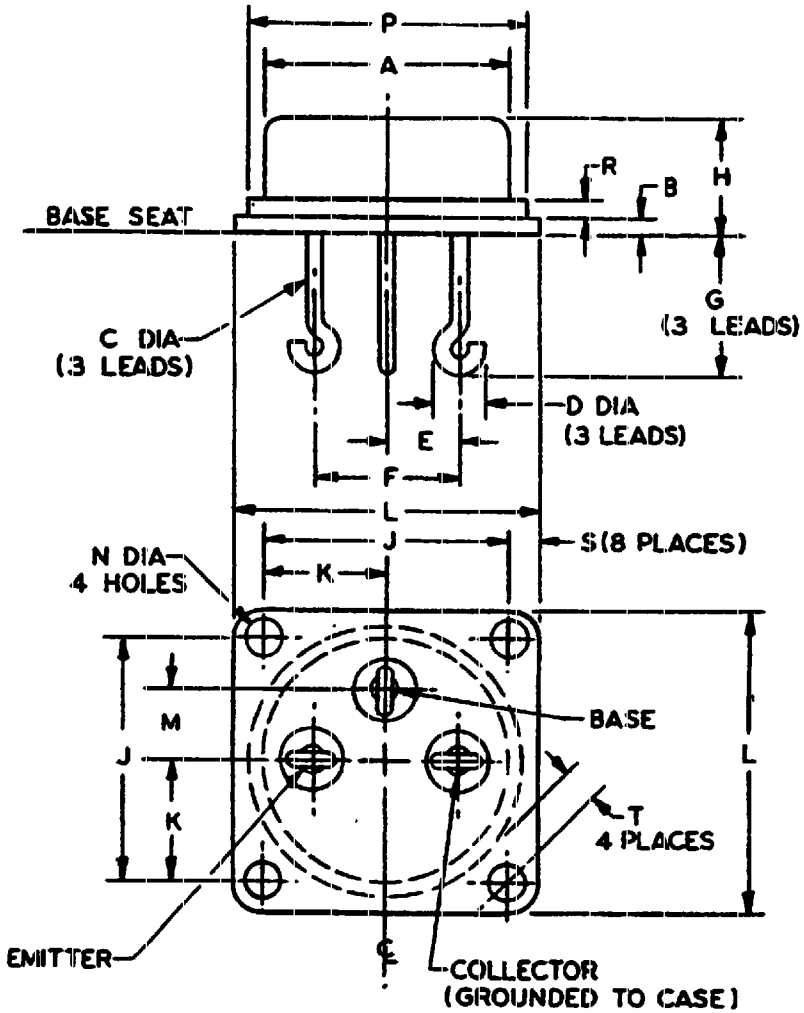


Figure 1. Outline and dimensions for transistor types 2N389 and 2N424.

Table I. Group A Inspection.

| Examination or test | MIL-STD-750 | | LTPD | Symbol | Limits | | |
|---|---|---|---|---|---|---|---|
| | Method | Details | | | Min | Max | Unit |
| Subgroup 1 | | | 10 | | | | |
| Visual and mechanical examination | 2071 | | | --- | --- | --- | --- |
| Subgroup 2 | | | 5 | | | | |
| Breakdown voltage collector to emitter | 3011 | Bias cond. B<br>$I_C$ = 10 mAdc<br>$R_{BE}$ = 33 ohms | | | | | |
| 2N389<br>2N424 | | | | $BV_{CER}$<br>$BV_{CER}$ | 60<br>80 | ---<br>--- | Vdc<br>Vdc |
| Collector to emitter voltage (saturated) | 3071 | $I_C$ = 1.0 Adc<br>$I_B$ = 200 mAdc<br>pulsed, see 4.4.2 | | | | | |
| 2N389<br>2N424 | | | | $V_{CE}$(sat)<br>$V_{CE}$(sat) | ---<br>--- | 5.0<br>10.0 | Vdc<br>Vdc |
| Breakdown voltage, emitter to base | 3026 | Bias cond. D<br>$I_E$ = 10 mAdc | | $BV_{EBO}$ | 10 | --- | Vdc |
| Forward-current transfer ratio | 3076 | $I_C$ = 1 Adc<br>$V_{CE}$ = 15 Vdc<br>pulsed, see 4.4.2 | | $h_{FE}$ | 15 | 60 | --- |
| Forward-current transfer ratio | 3076 | $I_C$ = 100 mAdc<br>$V_{CE}$ = 15 Vdc<br>pulsed, see 4.4.2 | | $h_{FE}$ | 8 | --- | --- |
| Base to emitter voltage (nonsaturated) | 3066 | Test cond. B<br>$V_{CE}$ = 15 Vdc<br>pulsed, see 4.4.2 | | | | | |
| 2N389<br>2N424 | | $I_C$ = 1.5 Adc<br>$I_C$ = .75 Adc | | $V_{BE}$<br>$V_{BE}$ | ---<br>--- | 8.0<br>8.0 | Vdc<br>Vdc |
| Subgroup 3 | | | 10 | | | | |
| High temperature operation: | | $T_C$ = 100°C,<br>see 4.4.4 | | | | | |
| Collector to emitter cutoff current | 3041 | Bias cond. B<br>$V_{CE}$ = 60 Vdc<br>$R_{BE}$ = 33 ohms | | $I_{CER}$ | --- | 10 | mAdc |
| Low temperature operation: | | $T_A$ = -55°C max.<br>see 4.4.4 | | | | | |
| Forward-current transfer ratio | 3076 | $V_{CE}$ = 15 Vdc<br>$I_C$ = 1 Adc<br>pulsed, see 4.4.2 | | $h_{FE}$ | 8 | --- | --- |

Table II. Group B Inspection.

| Examination or test | MIL-STD-750 | | LTPD | Symbol | Limits | | |
|---|---|---|---|---|---|---|---|
| | Method | Details | | | Min | Max | Unit |
| Subgroup 1 | | | 20 | | | | |
| Physical dimensions | 2066 | | | --- | (See figure 1) | | |
| Subgroup 2 | | | 20 | | | | |
| Solderability | 2026 | Immersion depth = 0.200 ± 0.025 inches dwell time = 10 ± 1 sec. | | --- | --- | --- | --- |
| Temperature cycling | 1051 | Test cond. C | | --- | --- | --- | --- |
| Thermal shock (glass strain) | 1056 | Test cond B | | --- | --- | --- | --- |
| Terminal strength (tension) | 2036 | Test cond. A weight = 10 lbs ± 10 oz. time = 15 ± 3 sec. | | --- | --- | --- | --- |
| Terminal strength (torque) | 2036 | Test cond. D1 torque = 6 oz-in. time = 5 ± 1 sec. | | --- | --- | --- | --- |
| Seal test (leak rate) | --- | Method 112 MIL-STD-202 Test cond. C, Procedure III, Test cond. A for gross leaks | | --- | --- | $5x10^{-7}$ | atm cc/sec |
| Moisture resistance | 1021 | omit initial conditioning | | --- | --- | --- | --- |
| End points: | | | | | | | |
| Breakdown voltage, collector to emitter | 3011 | Bias cond B. $I_C$ = 10 mAdc $R_{BE}$ = 33 ohms | | | | | |
| 2N389 | | | | $BV_{CER}$ | 60 | --- | Vdc |
| 2N424 | | | | $BV_{CER}$ | 80 | --- | Vdc |
| Forward-current transfer ratio | 3076 | $I_C$ = 1 Adc $V_{CE}$ = 15 Vdc pulsed, see 4.4.2 | | $h_{FE}$ | 15 | 60 | --- |
| Subgroup 3 | | | 10 | | | | |
| Shock | 2016 | Nonoperating; 500 G, approx. 1 msec; 5 blows each in orientation $X_1$, $Y_1$, $Y_2$, and $Z_1$ | | --- | --- | --- | --- |
| Vibration fatigue | 2046 | Nonoperating | | --- | --- | --- | --- |
| Vibration, variable frequency | 2056 | Nonoperating | | --- | --- | --- | --- |
| Constant acceleration | 2006 | 5000 G in each orientation $X_1$, $Y_1$, $Y_2$, and $Z_1$ | | --- | --- | --- | --- |
| End points: | | | | | | | |
| (Same as subgroup 2) | | | | | | | |

Table II. Group B inspection. - Continued

| Examination or test | MIL-STD-750 | | LTPD | Symbol | Limits | | |
|---|---|---|---|---|---|---|---|
| | Method | Details | | | Min | Max | Unit |
| Subgroup 4 | | | 10 | | | | |
| Salt atmosphere (corrosion) | 1041 | (See 3.4.1) | | --- | --- | --- | --- |
| End points: | | | | | | | |
| (Same as subgroup 2) | | | | | | | |
| Subgroup 5 | | | $\lambda = 10$ | | | | |
| High-temperature life (nonoperating) | 1031 | $T_{stg} = 200°C$ | | --- | --- | --- | --- |
| End points: | | | | | | | |
| Breakdown voltage, collector to emitter | 3011 | Bias cond B. $I_C = 20$ mAdc $R_{BE} = 33$ ohms | | | | | |
| 2N389 | | | | $BV_{CER}$ | 60 | --- | Vdc |
| 2N424 | | | | $BV_{CER}$ | 80 | --- | Vdc |
| Forward-current transfer ratio | 3076 | $I_C = 1$ Adc $V_{CE} = 15$ Vdc pulsed, see 4.4.2 | | $h_{FE}$ | 12 | 75 | --- |
| Subgroup 6 | | | $\lambda = 20$ | | | | |
| Steady state operation life | 1026 | $T_C = 100^{+5}_{-0}°C$ $P_T = 48$ W $V_{CE} = 40$ Vdc | | --- | --- | --- | --- |
| End points: | | | | | | | |
| (Same as subgroup 5) | | | | | | | |

6. NOTES

6.1 Notes. The notes specified in Specification MIL-S-19500 are applicable to this specification.

Custodians:
Army - EL
Navy - SH
Air Force - 11

Review activities:
Army - EL, MU
Navy - SH
Air Force - 11, 17, 85

User activities:
Army - MI, SM
Navy - CG, MC, WP
Air Force - None

Preparing activity:
Navy - SH
(Project 5960-1924)