NOTE: The document identifier and heading has been changed on this page to reflect that this is a performance specification. There are no other changes to this document. The document identifier on subsequent pages has not been changed, but will be changed the next time this document is revised.

INCH-POUND

MIL-PRF-19207/39B
23 August 1991
SUPERSEDING
MIL-F-19207/39A(SHIPS)
10 April 1974

PERFORMANCE SPECIFICATION SHEET

FUSEHOLDERS, EXTRACTOR POST TYPE,
BLOWN FUSE INDICATING, TYPE FHL58G

This specification is approved for use by all departments and agencies of the Department of Defense.

The requirement for acquiring the product described herein shall consist of this specification sheet and the issue of the following specification listed in that issue of the Department of Defense Index of Specifications and Standards (DODISS) specified in the solicitation: MIL-F-19207.

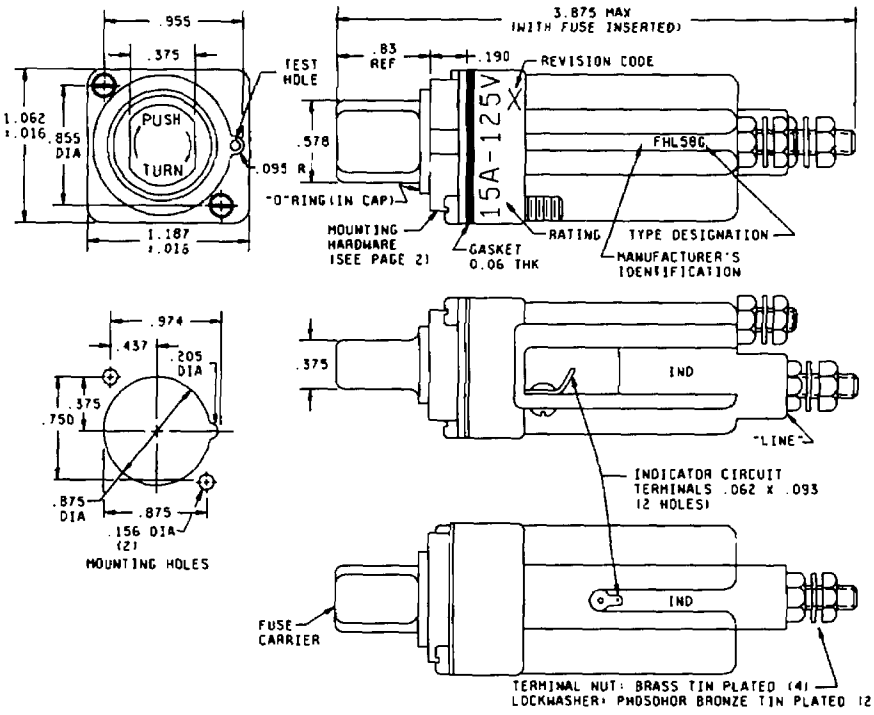

Inches	MM	Inches	MM	Inches	MM	Inches	MM
.016	.41	.156	3.96	0.578	14.68	0.955	24.26
.06	1.52	.190	4.83	.750	19.05	.974	24.74
.062	1.57	.375	9.53	.855	21.72	1.062	26.97
.093	2.36	.437	11.10	.875	22.23	1.187	30.15
.095	2.41	.205	5.21	.83	21.08	3.875	98.43

See notes on other page.

FIGURE 1. *Type FHL58G fuseholder.*

(B) denotes changes.

AMSC N/A

FSC 5920

DISTRIBUTION STATEMENT A. Approved for public release; distribution is unlimited.

NOTES:

1. Dimensions are in inches.
2. Unless otherwise specified, tolerances are .XX ± 0.02 and .XXX ± 0.005.
3. Metric equivalents (to the nearest 0.01 mm) are given for general information only and are based upon 1 inch = 25.4 mm.
4. Mounting hardware:

   Screw: 6-32UNC-2A Flat head 1.125 inches long (min) (unless otherwise specified)

   Nut: 6-32UNC-2B Square. A threaded metal insert may be used in lieu of nut.

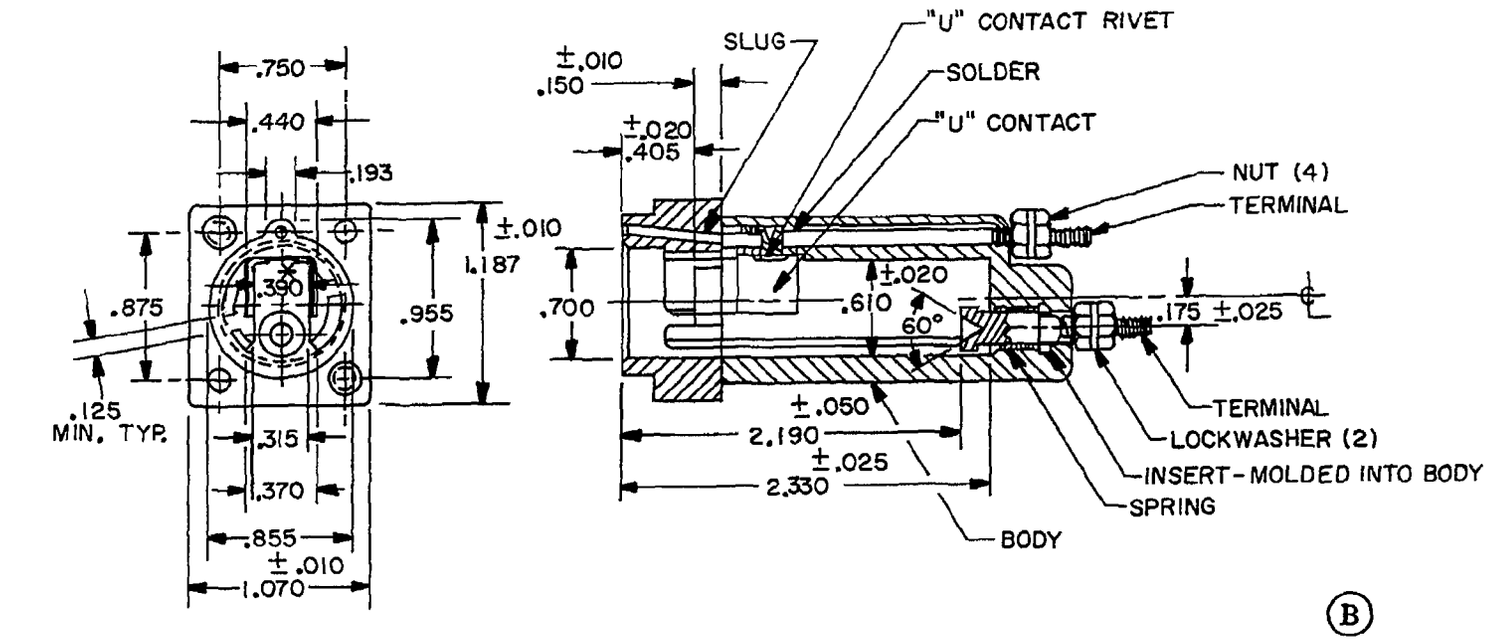

*"U" CONTACT DIMENSION

MI9207/39-001-BODY FOR FHL11U58G

FUSE CARRIER FOR MI9207/39-001 SHALL BE MI9207/38-002

Inches	MM	Inches	MM	Inches	MM	Inches	MM	Inches	MM
.010	0.25	.150	3.81	.390	9.91	.750	19.05	1.187	30.15
.020	0.51	.175	4.45	.405	10.29	.855	21.72	2.190	55.63
.025	0.64	.193	4.90	.440	11.18	.875	22.23	2.330	59.18
.050	1.27	.315	8.00	.610	15.49	.955	24.26		
.125	3.18	.370	9.40	.700	17.78	1.070	27.18		

See notes on other page.

FIGURE 2. *Body for FHL58G fuseholder.*

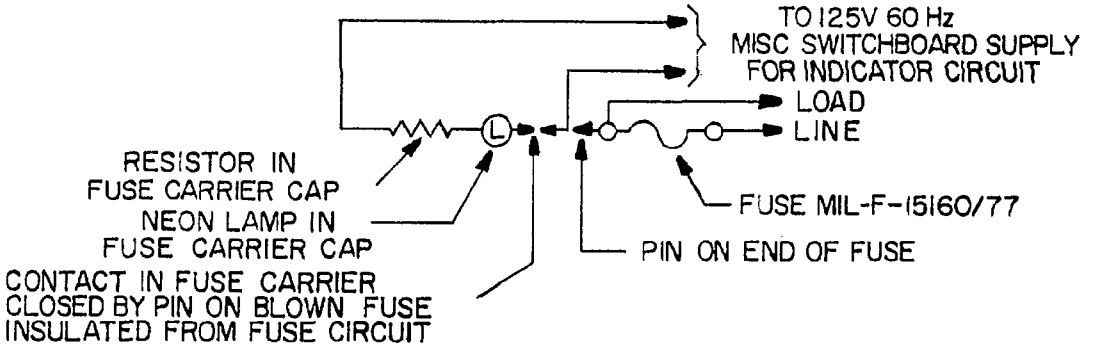

FIGURE 3. *Schematic of FHL58G fuseholder.* (B)

REQUIREMENTS:

Dimensions, configuration, and material: See figures 1 and 2
Body material: MAI-60 or GDI-30F of MIL-M-14, MIL-P-19833
Fuse accommodations:
Ferrule type, alarm indicating:
Size: 0.250 inch (6.35 mm) diameter, 1.250 inches (28.58 mm) length (nominal)
Style fuse: F77 of MIL-F-15160/77
Poles: One
Rating: 15 amperes, 125 volts
Panel thickness: 0.125 (3.18 mm) inch maximum
Indicating: Polycarbonate lens neon lamp
(B) Lamp series resistor: MIL-R-39008/1 or MIL-R-39017/1, 120,000 ohms
Fuse carrier: The spring constant for the switch spring shall be such that a force of 0.56 ounce is required to compress the spring 0.045 inch (1.14 mm)
Terminals: Stud type, No. 8-32UNC-2A thread. Brass, silver platted, or tin plated
Solder type, brass, silver plated
Test fuses:
Temperature rise: F77A125V15A of MIL-F-15160/77
Short circuit: F77A125V15A of MIL-F-15160/77
Mechanical shock: Method I of MIL-F-19207. Momentary opening of indicating circuit contacts permitted
Terminal strength: 20 pounds (stud terminals)
5 pounds (solder terminals)
Torque: Terminals – 15 pounds-inch
Salt spray (corrosion): Test condition B

Custodians:
Army – ER
Navy – SH
Air Force – 85

Review activities:
Army – MI, ME, AR
Navy – OS, EC
Air Force – 11, 17, 70, 71, 80, 82, 84

User activities:
Army – AT
Navy – AS, MC
Air Force – 19

Preparing activity:
Navy – SH
(Project 5920-0459-19)