INCH-POUND
MIL-PRF-19207/11K
12 December 2013
SUPERSEDING
MIL-PRF-19207/11J
24 April 2007

PERFORMANCE SPECIFICATION SHEET

FUSEHOLDER, EXTRACTOR POST TYPE, BLOWN FUSE NONINDICATING, TYPE FHN20G

This specification is approved for use by all Departments and Agencies of the Department of Defense.

The requirements for acquiring the product described herein shall consist of this specification sheet and MIL-PRF-19207.

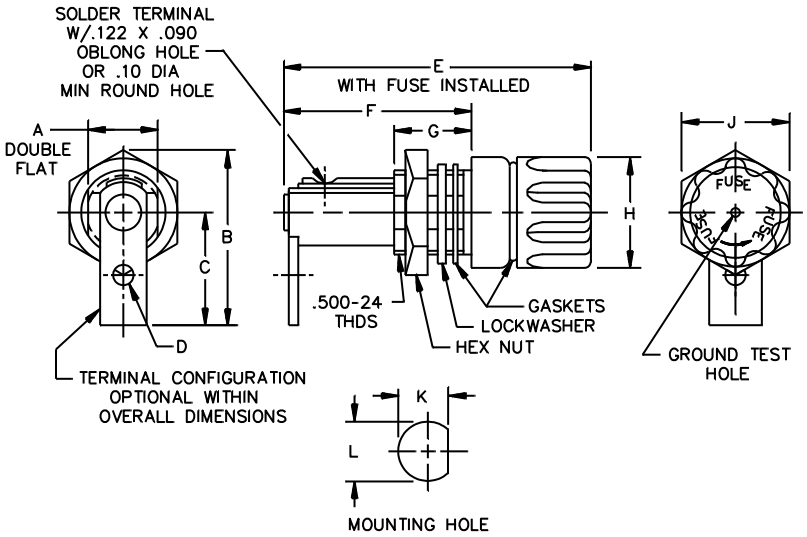

Ltr	Inches		mm		Ltr	Inches		mm	
	Min	Max	Min	Max		Min	Max	Min	Max
A	.440	.452	11.18	11.48	G	.420	.460	10.67	11.68
B	1.01 (REF)		25.65 (REF)		H	.680	.690	17.27	17.53
C	---	.640	---	16.36	J	.670	.710	17.02	18.03
D	.120	.160	3.05	4.06	K	.475	.480	12.07	12.19
E	---	1.780	---	45.21	L	.500	.510	12.70	12.95
F	.980	1.02	24.89	25.91					

NOTES:
1. Dimensions are in inches.
2. Metric equivalents (to the nearest .01 mm) are given for general information only.
3. Unless otherwise specified, tolerances are ±.02 (0.51 mm) for two-place decimals and ±0.005 (0.13 mm) for three-place decimals.
4. The shape of the above fuseholder and knob marking are shown for information only. Slight deviations from this outline drawing and/or the knob marking, which do not alter the functional aspect of the device, are acceptable.

FIGURE 1. Type FHN20G fuseholder.

REQUIREMENTS:

Interface and physical dimensions: See figure 1.

Cap and body molding material: Cap and body molding materials shall be selected to enable the fuseholder to meet the performance requirements of this specification. Additional information and guidance on cap and body molding material are specified in the notes.

Fuse accommodation:

Ferrule type:

Size: 0.250 inch (6.35 mm) diameter, 1.250 inches (31.75 mm) length.

Style: F02: MIL-PRF-15160/2, F03: MIL-PRF-15160/3; FM09: MIL-PRF-23419/9.

(or equivalent size and style).

Poles: One.

Rating: 20 amperes, 250 volts maximum.

Panel thickness: 0.187 inch (4.75 mm) maximum.

Gaskets: Gaskets shall be used that enable the fuseholder to meet the performance requirements of this specification. Additional information and guidance on gaskets are specified in the notes.

Lamp series resistor: None.

Terminals: Solder lug type.

Enclosure: Dripproof.

Test fuses:

Temperature rise: F03A125V20A of MIL-PRF-15160/3.

Short circuit: F03A250V15A of MIL-PRF-15160/3.

Dielectric withstanding voltage: F03A.

Mechanical shock: Method II of MIL-PRF-19207.

Terminal strength: 5 pounds.

Torque: Mounting: 20 pounds-inch.

Salt spray (corrosion): Test condition B.

Part or Identifying Number (PIN): FHN20G.

NOTES:

Cap and body molding material: It is recommended that types MAI-60, GDI-30F or SDG-F of American Society for Testing and Materials ASTM-D5948 be considered for meeting the cap and body molding material requirements of this specification.

Gaskets: It is recommended that class 3 silicone rubber of A-A-59588 (Rubber, Silicone), be considered for use in meeting the gasket material requirements of this specification.

Referenced documents. In addition to MIL-PRF-19207, this document references the following:

MIL-PRF-15160/2, MIL-PRF-15160/3 MIL-PRF-23419/9 A-A-59588 ASTM-D5948

The margins of this specification are marked with vertical lines to indicate where changes from the previous issue were made. This was done as a convenience only and the Government assumes no liability whatsoever for any inaccuracies in these notations. Bidders and contractors are cautioned to evaluate the requirements of this document based on the entire content irrespective of the marginal notations and relationship to the last previous issue.

Custodians:
Army - CR
Navy - SH
Air force - 85
DLA - CC

Preparing Activity:
DLA - CC

(Project 5920-2012-059)

Review Activities:
Army - AR, AT, CR4, MI
Navy - AS, EC, MC, OS
Air Force - 19, 99

NOTE: The activities listed above were interested in this document as of the date of this document. Since organizations and responsibilities can change, you should verify the currency of the information above using the ASSIST Online database at https://assist.dla.mil.