INCH-POUND

MS53233A
31 August 2007
SUPERSEDING
MS53233
18 August 1976

MILITARY SPECIFICATION SHEET

COILS, RADIO FREQUENCY, ENCAPSULATED, VARIABLE, MICRO-MINIATURE, IRON CORE, TYPES LT11V077 TO LT11V097, INCL.

Inactive for new design.

This specification is approved for use by all Departments and Agencies of the Department of Defense.

The requirements for acquiring the products described herein shall consist of this specification and MIL-PRF-15305.

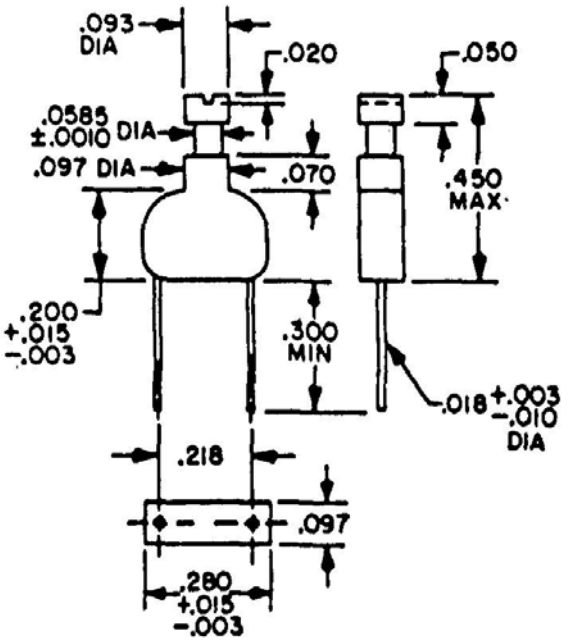

INCHES	mm	INCHES	mm
.001	.03	.070	1.78
.003	.08	.093	2.36
.010	.25	.097	2.46
.015	.38	.200	5.08
.018	.46	.218	5.54
.020	.51	.280	7.11
.050	1.27	.300	7.62
.0585	1.49	.450	11.43

NOTES:
1. Dimensions are in inches.
2. Metric equivalents are given for general information only.
3. Unless otherwise specified, tolerance is ±.005 (0.13 mm).

FIGURE 1. Dimensions and configuration.

REQUIREMENTS:

Design, construction, and physical dimensions: See figure 1.

Weight: .25 gram, maximum.

Operating temperature range: -55° to +105°C.

Ambient temperature: +90°C maximum.

Temperature rise: 15°C.

Power dissipation: 225 mW maximum.

Lead material: -1 through -12 is .018 (0.46 mm) diameter copper.
-13 through -21 is .018 (0.46 mm) diameter gold-plated Kovar.

Terminal pull: 2 pounds, minimum.

Tuning torque: .005 - .2 in. oz.

Stop torque: .2 in. oz. max.

Altitude: 70,000 feet.

Shock, specified pulse: Method 213 of MIL-STD-202, test condition I, is applicable.

Dielectric withstanding voltage:

At sea level: Method 301 of MIL-STD-202, test voltage 1,000 V rms minimum.

At reduced barometric pressure: Method 105 of MIL-STD-202, test condition C, test voltage 200 V rms minimum.

Resistance to soldering heat: Method 210 of MIL-STD-202, test condition B.

Electrical characteristics: See tables I and II.

Inductance: See table I.

Q values: See table I.

Self-resonant frequency (SRF): See table I.

DC resistance (DCR): See table I.

Marking: Marking shall be as specified in MIL-PRF-15305 except that the marking shall be on the unit package or container.

Part or Identifying Number (PIN): MS53233 - (dash number from table I).

TABLE 1. Electrical characteristics (initial).

Dash Number MS53233	Inductance		Q Min. At L Max.	Test Frequency (MHz)	SRF Minimum (MHz)	DC resistance At 25°C, max (Ohms)	Rated DC current, maximum (mA)
	L Max. μH	L Min. μH					
-1	.025	.020	50	200	1,000	.02	250
-2	.051	.035	40	100	700	.03	250
-3	.076	.040	40	100	615	.10	250
-4	.10	.07	30	25	500	.3	250
-5	.15	.11	30	25	420	.35	200
-6	.22	.16	30	25	400	.4	180
-7	.27	.19	30	25	400	.5	180
-8	.33	.165	30	25	320	.6	140
-9	.47	.34	30	25	290	.65	100
-10	.56	.40	30	25	250	.75	100
-11	.68	.50	30	25	240	.85	100
-12	.82	.59	30	25	180	.9	100
-13	1.0	.50	25	7.9	140	.4	125
-14	1.5	1.0	25	7.9	135	.8	100
-15	2.2	1.2	25	7.9	100	1.4	80
-16	2.7	1.95	25	7.9	60	1.6	75
-17	3.3	2.2	25	7.9	60	1.8	65
-18	4.7	2.5	25	7.9	50	2.2	60
-19	5.8	2.9	25	7.9	38	2.8	58
-20	6.8	3.4	25	7.9	36	3.0	55
-21	8.2	4.6	25	7.9	25	3.0	50

TABLE II. Electrical characteristics (final).

Inspection group	Allowable variation from Initial measurement		Allowable percent from specified minimum value in electrical characteristics (initial) table	
	Inductance (percent)	DC resistance	Self-resonant frequency	Q
Qualification inspection				
Group II	±5	---	---	-10
Group III	±5	±(2% +.001 ohm)	-5	-10
Group IV	±5	±(2% +.001 ohm)	-10	-10
Conformance inspection group C				
Subgroup I	±5	---	---	-10
Subgroup II	±5	±(2% +.001 ohm)	-10	-10
Subgroup III	±5	±(2% +.001 ohm)	-5	-10

Application notes:

1. The test fixture in the diagram following shall be used for electrical measurements. Inductance values are effective inductance as indicated on a HP260A, HP190A or equivalent Q meter, when tested in the test fixture. Add 5 percent to Q reading to account for loss of Q in the test jig.
2. Polarization during moisture resistance test is not applicable.
3. Coils are held rigidly by the body during vibration and mechanical shock testing.
4. Resistance to soldering heat test, per method 210, of MIL-STD-202, test condition B, is applicable.
5. For dielectric withstanding voltage, barometric pressure and insulation resistance units shall be placed on Flat metal plate with leads insulated from surface. Measurement of dielectric withstanding voltage, barometric pressure and insulation resistance shall be between the leads of the coil connected together and the metal plate.
6. Screw core assembly shall be set at maximum specified inductance value indicated in the electrical characteristics table (initial), prior to all inspection tests. This setting shall not be changed until electrical characteristics (final) measurements are performed.

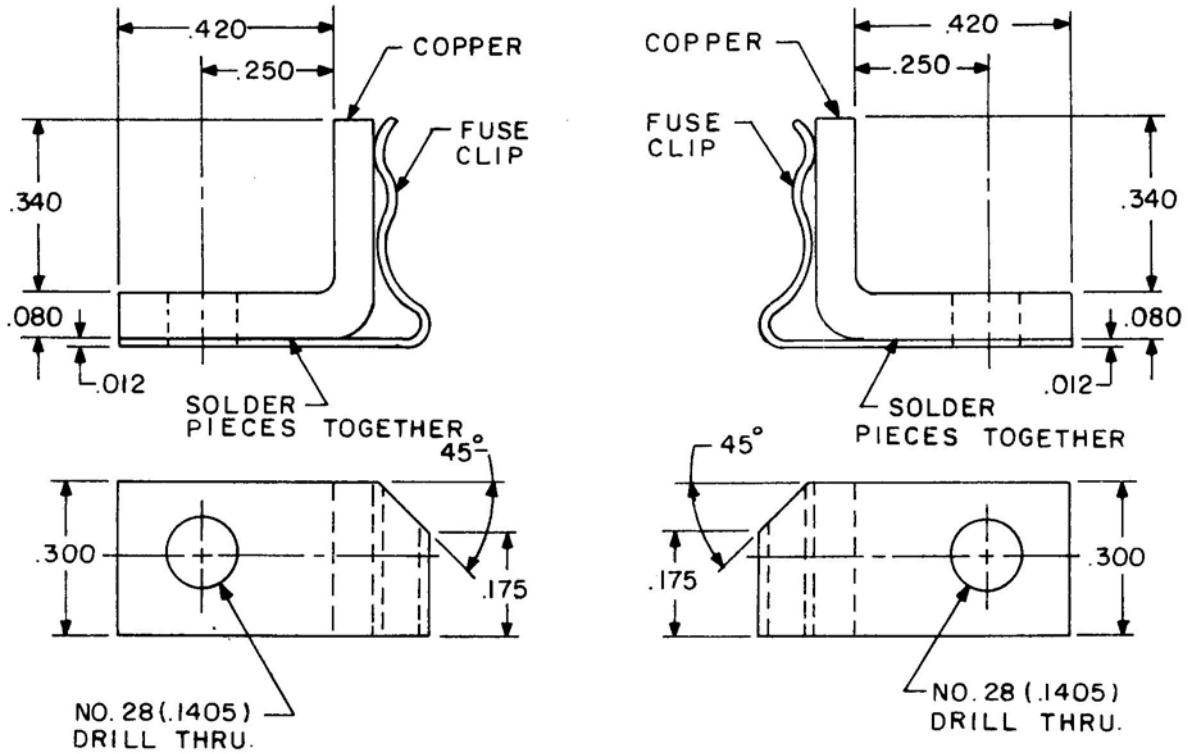

INCHES	MM
.012	0.30
.080	2.03
.1405	3.57
.175	4.45
.250	6.35
.300	7.62
.340	8.64
.420	10.67

SIDE B

SIDE A

FIGURE 2. Test fixture for electrical measurements.

Changes from previous issue. The margins of this specification are marked with vertical lines to indicate where changes from the previous issue were made. This was done as a convenience only and the Government assumes no liability whatsoever for any inaccuracies in these notations. Bidders and contractors are cautioned to evaluate the requirements of this document based on the entire content irrespective of the marginal notations and relationship to the last previous issue.

Referenced documents.

MIL-PRF-15305
MIL-STD-202

Custodians:
Army – CR
Navy - EC
Air Force - 11
DLA – CC

Review activities:
Army – AR, MI
Navy – AS, MC, OS, SH
Air Force – 19

Preparing activity:
DLA – CC

Project 5950-2007-032

NOTE: The activities listed above were interested in this document as of the date of this document. Since organizations and responsibilities can change, you should verify the currency of the information above using the ASSIST Online database at http://assist.daps.dla.mil.