INCH-POUND
MIL-PRF-15160/38B
12 October 2011
SUPERSEDING
MIL-PRF-15160/38A
14 March 2005

PERFORMANCE SPECIFICATION SHEET

FUSES, STYLE F38

INACTIVE FOR NEW DESIGN
AFTER 27 DECEMBER 1990

This specification is approved for use by all Departments and Agencies of the Department of Defense.

The requirements for acquiring the product described herein shall consist of this specification sheet and MIL-PRF-15160.

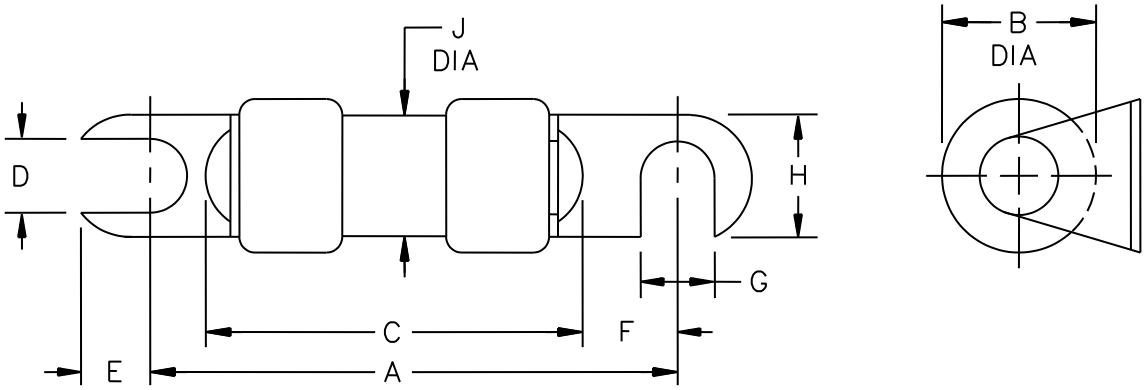

Ltr	Inches		mm	
	Min	Max	Min	Max
A	2.969	3.031	75.41	76.99
B	.782	.844	19.86	21.44
C	2.094	2.156	53.19	54.76
D	.234	.296	5.94	7.52
E	.281	.343	7.14	8.71
F	.406	.468	10.31	11.89
G	.234	.296	5.94	7.52
H	.782	.844	19.87	21.44
J	.719	.781	18.26	19.84

NOTES:
1. Dimensions are in inches.
2. Metric equivalents are given for general information only.

FIGURE 1. Style F38.

REQUIREMENTS:

Interface and physical dimensions: See figure 1.

Body: Fiber.

Ferrule: Brass.

Terminal strength: 5 inch-pounds.

Type designation: Type designation shall be as specified in table 1.

Electrical:

Voltage rating: 125 volts dc maximum.

Overload interrupt:

Characteristic A: Maximum 1 hour at 135 percent of rated current.

Characteristic B: Maximum 1 hour at 135 percent of rated current, and a minimum of 5 seconds at 300 percent.

Short circuit interrupt: 10,000 amperes at 125 volts dc.

Current rating: See table 1.

Voltage rating: See table 1.

Characteristic: See table 1.

TABLE 1. Type designation and electrical rating.

Style	Characteristic	Voltage	Current
F38	A	125 V	35 A
F38	A	125 V	40 A
F38	A	125 V	50 A
F38	A	125 V	60 A
F38	B	125 V	35 A
F38	B	125 V	40 A
F38	B	125 V	50 A
F38	B	125 V	60 A

VERIFICATION:

Qualification is not applicable for this specification sheet and is replaced by successful completion of group A and group B inspections in MIL-PRF-15160, before product is delivered.

The margins of this specification are marked with vertical lines to indicate where changes from the previous issue were made. This was done as a convenience only and the Government assumes no liability whatsoever for any inaccuracies in these notations. Bidders and contractors are cautioned to evaluate the requirements of this document based on the entire content irrespective of the marginal notations and relationship to the last previous issue.

Custodians:
Army - CR
Navy - SH
Air Force - 85
DLA - CC

Review activities:
Air Force - 99

Preparing activity:
DLA - CC

(Project 5920-2011-036)

NOTE: The activities listed above were interested in this document as of the date of this document. Since organizations and responsibilities can change, you should verify the currency of the information above using the ASSIST Online database at https://assist.daps.dla.mil