INCH-POUND
MIL-PRF-15160/2J
6 November 2014
SUPERSEDING
MIL-PRF-15160/2H
15 October 2008

PERFORMANCE SPECIFICATION SHEET

FUSES, INSTRUMENT, POWER, AND TELEPHONE (NONINDICATING), STYLE F02

This specification is approved for use by all Departments and Agencies of the Department of Defense.

The requirements for acquiring the product described herein shall consist of this specification sheet and MIL-PRF-15160.

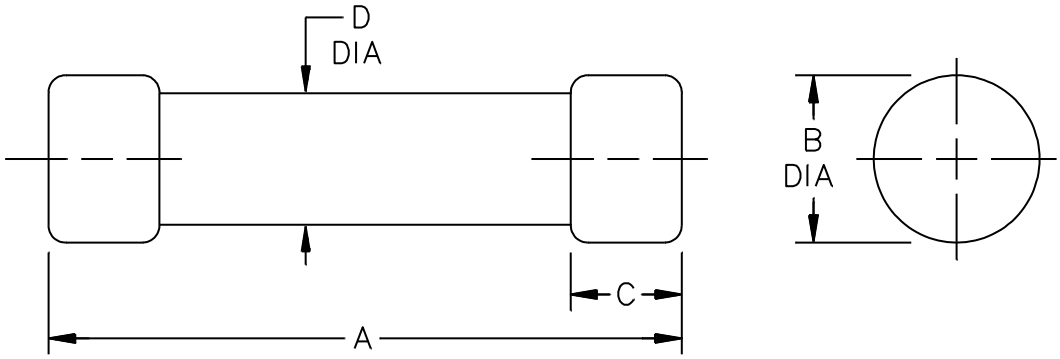

Ltr	Inches		mm	
	Min	Max	Min	Max
A	1.219	1.281	30.96	32.54
B	.246	.254	6.25	6.45
C	.240	.260	6.10	6.60
D	---	.230	---	5.84

NOTES:
1. Dimensions are in inches.
2. Metric equivalents are given for general information only.

FIGURE 1. Style F02, fuse.

REQUIREMENTS:

Interface and physical dimensions: See figure 1.

Terminals: Ferrule type.

Material: Brass, copper, phosphor bronze, or copper alloy.

Finish: Nickel, or silver plated when specified.

Strength: Method 211 of MIL-STD-202, test condition E, 10 inch-ounce torque between ferrules and fuse body.

Body: Glass tube.

Electrical:

Current rating: See table I.

Voltage rating: See table I.

Characteristic: See table I.

Overload interrupt: See table I (at all temperatures between minus 55°C and plus 85°C).

Short circuit interrupt: See table I.

Shock:	F02A 1/100A through 3/4A	MIL-STD-202, method 213, test condition I
	F02A 1A through 30A	MIL-STD-202, method 207, (HI shock)
	F02B 1/100A through 8/10A	MIL-STD-202, method 213, test condition I
	F02B 1A through 30A	MIL-STD-202, method 207, (HI shock)
Vibration:	F02A 1/100A through 30A	MIL-STD-202, method 204, test condition A (except 5g peak)
	F02B 1/100A through 8/10A	MIL-STD-202, method 201
	F02B 1A through 30A	MIL-STD-202, method 204, test condition A (except 5g peak)

Type designation: Type designation shall be as specified in table I.

TABLE I Type designations and electrical rating.

2Type designation				Overload interrupt time 2/		AC short circuit interrupt.		
Style	Characteristic	Maximum voltage	Current rating 3/ (amperes)	135% of rating – Max. 1 hour				
				200% of rating (seconds)	300% of rating (seconds)	32 volts	125 volts	250 volts
F02	A	250V	1/100A	0.0003 – 1.0	0.0001 – 0.003	10,000A	10,000A	35A
F02	A	250V	1/32A	0.0008 – 1.0	0.0002 – 0.003	10,000A	10,000A	35A
F02	A	250V	1/8A	0.010 – 2.0	0.003 – 0.15	10,000A	10,000A	35A
F02 1/	A	250V	15/100A	0.010 – 2.0	0.008 – 0.15	10,000A	10,000A	35A
F02 1/	A	250V	175/100A	0.010 – 2.0	0.008 – 0.15	10,000A	10,000A	35A
F02 1/	A	250V	3/16A	0.010 – 2.0	0.008 – 0.15	10,000A	10,000A	35A
F02 1/	A	250V	2/10A	0.010 – 2.0	0.008 – 0.15	10,000A	10,000A	35A
F02	A	250V	1/4A	0.020 – 2.0	0.008 – 0.20	10,000A	10,000A	35A
F02 1/	A	250V	3/10A	0.030 – 2.5	0.008 – 0.20	10,000A	10,000A	35A
F02	A	250V	3/8A	0.030 – 2.5	0.008 – 0.30	10,000A	10,000A	35A
F02	A	250V	1/2A	0.030 – 3.0	0.015 – 0.40	10,000A	10,000A	35A
F02 1/	A	250V	6/10A	0.030 – 3.0	0.015 – 0.40	10,000A	10,000A	35A
F02	A	250V	3/4A	0.030 – 3.0	0.015 – 0.40	10,000A	10,000A	35A
F02	A	250V	1A	0.050 – 3.0	0.015 – 0.40	10,000A	10,000A	35A
F02 1/	A	250V	1 1/4A	0.050 – 3.0	0.02 – 0.40	10,000A	10,000A	35A
F02	A	250V	1 1/2A	0.050 – 3.0	0.02 – 0.40	10,000A	10,000A	35A
F02 1/	A	250V	1 6/10A	0.050 – 3.0	0.02 – 0.40	10,000A	10,000A	35A
F02	A	250V	2A	0.080 – 3.0	0.04 – 0.40	10,000A	10,000A	35A
F02 1/	A	250V	2 1/2A	0.15 – 3.0	0.04 – 0.70	10,000A	10,000A	35A
F02	A	250V	3A	0.15 – 5.0	0.04 – 1.0	10,000A	10,000A	35A
F02	A	250V	4A	0.15 – 5.0	0.04 – 1.0	10,000A	10,000A	35A
F02	A	250V	5A	0.15 – 5.0	0.04 – 1.0	10,000A	10,000A	100A
F02	A	250V	6A	0.15 – 5.0	0.04 – 1.0	10,000A	10,000A	100A
F02 1/	A	125V	8A	0.20 – 10.0	0.10 – 2.0	10,000A	10,000A	Not rated
F02	A	125V	10A	0.20 – 10.0	0.10 – 2.0	10,000A	10,000A	Not rated
F02	A	32V	15A	0.30 – 10.0	0.10 – 2.0	10,000A	Not rated	Not rated

See footnotes at end of table.

TABLE I Type designations and electrical rating - Continued.

Type designation				Overload interrupt time 2/		AC short circuit interrupt.		
Style	Characteristic	Maximum voltage	Current rating 3/ (amperes)	135% of rating – Max. 1 hour				
				200% of rating (seconds)	300% of rating (seconds)	32 volts	125 volts	250 volts
F02	A	32V	20A	0.40 – 10.0	0.15 – 2.0	10,000A	Not rated	Not rated
F02 1/	A	32V	25A	0.50 – 10.0	0.15 – 2.0	10,000A	Not rated	Not rated
F02 1/	A	32V	30A	0.50 – 10.0	0.15 – 2.0	10,000A	Not rated	Not rated
F02	B	250V	1/100A	4.0 – 120.0	3.0 – 40.0	10,000A	10,000A	35A
F02	B	250V	1/32A	4.0 – 120.0	3.0 – 40.0	10,000A	10,000A	35A
F02	B	250V	1/16A	4.0 – 60.0	1.5 – 20.0	10,000A	10,000A	35A
F02 1/	B	250V	1/10A	4.0 – 60.0	1.5 – 20.0	10,000A	10,000A	35A
F02	B	250V	1/8A	4.0 – 60.0	1.5 – 20.0	10,000A	10,000A	35A
F02 1/	B	250V	15/100A	4.0 – 60.0	1.5 – 20.0	10,000A	10,000A	35A
F02 1/	B	250V	3/16A	4.0– 60.0	1.5 – 20.0	10,000A	10,000A	35A
F02 1/	B	250V	2/10A	4.0 – 60.0	1.5 – 20.0	10,000A	10,000A	35A
F02	B	250V	1/4A	4.0 – 60.0	1.5 – 20.0	10,000A	10,000A	35A
F02 1/	B	250V	3/10A	4.0 – 60.0	1.5 – 20.0	10,000A	10,000A	35A
F02	B	250V	3/8A	4.0 – 60.0	1.5 – 20.0	10,000A	10,000A	35A
F02 1/	B	250V	4/10A	4.0 – 60.0	1.5 – 20.0	10,000A	10,000A	35A
F02	B	250V	1 2A	4.0 – 60.0	1.5 – 20.0	10,000A	10,000A	35A
F02 1/	B	250V	6/10A	4.0 – 60.0	1.5 – 20.0	10,000A	10,000A	35A
F02 1/	B	250V	7/10A	4.0 – 60.0	1.5 – 20.0	10,000A	10,000A	35A
F02	B	250V	3/4A	4.0 – 60.0	1.5 – 20.0	10,000A	10,000A	35A
F02 1/	B	250V	8/10A	4.0 – 60.0	1.5 – 20.0	10,000A	10,000A	35A
F02	B	250V	1A	4.0 – 60.0	1.5 – 20.0	10,000A	10,000A	35A
F02 1/	B	250V	1 1/4A	4.0 – 90.0	1.5 – 30.0	10,000A	10,000A	35A
F02	B	250V	1 1/2A	4.0 – 90.0	1.5 – 30.0	10,000A	10,000A	35A
F02 1/	B	250V	1 6/10A	4.0 – 90.0	1.5 – 30.0	10,000A	10,000A	35A
F02	B	250V	2A	4.0 – 90.0	1.5 – 30.0	10,000A	10,000A	35A
F02	B	250V	2 1/2A	4.0 – 90.0	1.5 – 30.0	10,000A	10,000A	35A
F02	B	250V	2 8/10A	4.0 – 90.0	1.5 – 30.0	10,000A	10,000A	35A

See footnotes at end of table.

TABLE I Type designations and electrical rating – Continued.

Type designation				Overload interrupt time 2/		AC short circuit interrupt.		
Style	Characteristic	Maximum voltage	Current rating 3/ (amperes)	135% of rating – Max. 1 hour				
				200% of rating (seconds)	300% of rating (seconds)	32 volts	125 volts	250 volts
F02	B	250V	3A	4.0 – 90.0	1.5 – 30.0	10,000A	10,000A	35A
F02	B	250V	3 2/10A	4.0 – 90.0	1.5 – 30.0	10,000A	10,000A	35A
F02 1/	B	125V	4A	4.0 – 90.0	1.5 – 30.0	10,000A	10,000A	Not rated
F02	B	125V	5A	4.0 – 90.0	1.5 – 30.0	10,000A	10,000A	Not rated
F02 1/	B	125V	6 1/4A	4.0 – 90.0	1.5 – 30.0	10,000A	10,000A	Not rated
F02 1/	B	125V	7A	4.0 – 90.0	1.5 – 30.0	10,000A	10,000A	Not rated
F02	B	32V	8A	4.0 – 700.0	1.0 – 30.0	10,000A	Not rated	Not rated
F02	B	32V	10A	4.0 – 700.0	1.0 – 30.0	10,000A	Not rated	Not rated
F02 1/	B	32V	12A	4.0 – 700.0	1.0 – 30.0	10,000A	Not rated	Not rated
F02	B	32V	15A	4.0 – 700.0	1.0 – 30.0	10,000A	Not rated	Not rated
F02	B	32V	20A	4.0 – 700.0	1.0 – 30.0	10,000A	Not rated	Not rated
F02 1/	B	32V	25A	4.0 – 700.0	1.0 – 30.0	10,000A	Not rated	Not rated
F02 1/	B	32V	30A	4.0 – 700.0	1.0 – 30.0	10,000A	Not rated	Not rated

1/ INACTIVE FOR NEW DESIGN AFTER 30 JANUARY 1970.

2/ The overload interrupt time ranges, as shown, cover the temperature range from minus 55°C to plus 85°C. For characteristic B, the overload interrupt time at room ambient temperature shall be not less than 12 seconds at 200 percent rating.

3/ For silver plated terminals the designator “S” is added after the current rating.

VERIFICATION:

Qualification inspection is not applicable for the 1/100A thru 3/8A characteristic A fuses, the 1/100A thru 1/8A and 20A thru 30A characteristic B fuses of this specification sheet (see table I) and shall be replaced by acceptance testing consisting of Group A and Group B inspections per MIL-PRF-15160, prior to delivery.

INSPECTION ROUTINE:

Overload tests (group II): Fuses for the overload interrupt test shall be selected and tested as specified in table II for qualification test.

TABLE II. Overload tests.

Examination of test	Number of sample fuses
Group II	20
Terminal strength	12
Overload interrupt 1/	
135% at room ambient	4
200% at –55°C	4
200% at +85°C	4
300% at –55°C	4
300% at +85°C	4

1/ For characteristic B fuses, only, four additional fuses shall be tested at 200 percent of rating at room ambient temperature.

Low voltage overload interrupt (group V for qualification; group III for group C inspection): Four sample characteristic B fuses of each current rating shown in table III shall be subjected to 135 percent current at the voltage specified in the table. The fuses shall interrupt the circuit within 1 hour. The test shall be conducted at room ambient.

TABLE III. Low voltage overload interrupt.
(Characteristic B fuses only).

Ampere rating	Test voltage
1/100A	36V
1/4A	15V
1/2A	10V
7/10A	8V
8/10A	6V
1A	5V

Note – for low voltage applications, see 6.1.5.1 for caution regarding low voltage applications.

Short circuit test: The number of group III samples for qualification and qualification retention (group C) testing shall consist of 4 sample fuses of each of the types and of the current ratings as shown in table IV. Short circuit interrupt tests shall be conducted at the ac voltage indicated, and the fuses shall withstand a minimum short circuit current as shown in table IV.

TABLE IV. Short circuit tests.

Fuse type	Current rating	Short circuit current	AC test voltage
F02A	4A	35A	250V
F02A	6A	100A	250V
F02A	10A	10,000A	125V
F02A	30A	10,000A	32V
F02B	3 2/10A	35A	250V
F02B	7A	10,000A	125V
F02B	30A	10,000A	32V

Cross-reference: For applicable cross-reference see table V. The existing stocks of superseded items may be used. When exhausted, the superseding parts shall be used.

TABLE V. Cross reference.

Superseding number	Superseded numbers for CAGE								
	81349	81349	96906	71400	71400	75915	75915	75915	98997
F02A250V1/100A 1/	F02GR010A 1/	F02CR010 1/	MS90078-1 2/	AGC1/100		311.010	312.010	392.010	3AG1/100
F02A250V1/32A	F02GR031A	F02CR031	MS90078-2	AGC1/32		311.031	312.031	392.031	3AG1/32
F02A250V1/8A	F02GR125A	F02CR125	MS90078-4	AGC1/8	MGB1/8	311.125	312.125	392.125	3AG1/8
F02A250V15/100A				AGC15/100		311.150	312.150	392.150	3AG15/100
F02A250V175/1000A				AGC175/1000		311.175	312.175	392.175	3AG175/100
F02A250V3/16A				AGC3/16		311.187	312.187	392.187	3AG3/16
F02A250V2/10A				AGC2/10		311.200	312.200	392.200	3AG2/10
F02A250V1/4A	F02G2R250A	F02CR250	MS90078-5	AGC1/4		311.250	312.250	392.250	3AG1/4
F02A250V3/10A				AGC3/10		311.300	312.300	392.300	3AG3/100
F02A250V3/8A	F02GR375A	F02CR375	MS90078-6	AGC3/8		311.375	312.375	392.375	3AG3/8
F02A250V1/2A	F02GR500A	F02CA500	MS90078-7	AGC1/2		311.500	312.500	392.500	3AG1/2
F02A250V6/10A				AGC6/10		311.600	312.600	392.600	3AG6/10
F02A250V3/4A	F02GR750A	F02CR750	MS90078-8	AGC3/4		311.750	312.750	392.750	3AG3/4
F02A250V1A	F02G1R00A	F02C1R00	MS90078-9	AGC1		311001	312001	392001	3AG1
F02A250V1 1/4A				AGC1 1/4		3111.25	3121.25	3921.25	3AG1 1/4
F02A250V1 1/2A	F02G1R50A	F02C1R50	MS90078-10	AGC1 1/2		3111.50	3121.50	3921.50	3AG1 1/2
F02A250V1 6/10A				AGC1 6/10		3111.60	3121.60	3921.60	3AG1 6/10
F02A250V2A	F02G2R00A	F02C2R00	MS90078-11	AGC2		311002	312002	392002	3AG2
F02A250V2 1/2A				AGC2 1/2		31102.5	31202.5	39202.5	3AG2 1/2
F02A250V3A	F02G3R00A	F02C3R00	MS90078-12	AGC3		311003	312003	392003	3AG3
F02A250V4A	F02G4R00A	F02C4R00	MS90078-13	AGC4	MTH4	311004	312004	392004	3AG4
F02A250V5A	F02G5R00A	F02C5R00	MS90078-14	AGC5	MTH5	311005	312005	392005	3AG5
F02A250V6A	F02G6R00A	F02C6R00	MS90078-15	AGC6	MTH6	311006	312006	392006	3AG6
F02A125V8A	F02A32V8A	F02D8R00		AGC8	GLH8				
F02A250V10A	F02A32V10A	F02D10R0		AGC10	GLH10				
F02A32V15A		F02A15R0		AGC15					
F02A32V20A		F02A20R0		AGC20					
F02A32V25A		F02A25R0		AGC25					
F02A32V30A		F02A30R0		AGC30					

1/ See notes at end of table.

TABLE V. Cross reference – Continued.

Superseding number	Superseded numbers for CAGE					
	81349	96906	71400	75915	75915	98997
F02B250V1/100A 1/	F02GR010B 1/	MS90078-16 2/	MDL1/100	393.010	313.010	3AGTL1/100A-250V
F02B250V1/32A	F02GR031B	MS90078-17	MDL1/32	393.031	313.031	3AGTL1/32A-250V
F02B250V1/16A	F02GR062B	MS90078-18	MDL1/16	393.062	313.062	3AGTL1/16A-250V
F02B250V1/10A			MDL1/10		313.100	3AGTL1/10A-250V
F02B250V1/8A	F02GR0125B	MS90078-19	MDL1/8	393.125	313.125	3AGTL1/8A-250V
F02B250V15/100A			MDL15/100		313.150	3AGTL15/100A-250V
F02B250V3/16A			MDL3/16		313.187	3AGTL3/16A-250V
F02B250V2/10A			MDL2/10		313.200	3AGTL2/10A-250V
F02B250V1/4A	F02GR250B	MS90078-20	MDL1/4	393.250	313.250	3AGTL1/4A-250V
F02B250V3/10A			MDL3/10		313.300	3AGTL3/10A-250V
F02B250V3/8A	F02GR0375B	MS90078-21	MDL3/8	393.375	313.375	3AGTL3/8A-250V
F02B250V4/10A			MDL4/10		313.400	3AGTL4/10A-250V
F02B250V1/2A	F02GR500B	MS90078-22	MDL1/2	393.500	313.500	3AGTL1/2A-250V
F02B250V6/10A			MDL6/10		313.600	3AGTL6/10A-250V
F02B250V7/10A			MDL7/10		313.700	3AGTL7/10A-250V
F02B250V3/4A	F02GR750B	MS90078-23	MDL3/4	393.750	313.750	3AGTL3/4A-250V
F02B250V8/10A			MDL8/10		313.800	3AGTL8/10A-250V
F02B250V1A	F02G1R00B	MS90078-24	MDL1	393.001	313001	3AGTL1A-250V
F02B250V1 1/4A			MDL1 1/4		3131.25	3AGTL11/4A-250V
F02B250V1 1/2A	F02D1R50B	MS90078-25	MDL1 1/2		31301.5	3AGTL11/2A-250V
F02B250V1 6/10A			MDL1 6/10		31301.6	3AGTL16/10A-250V
F02B250V2A	F02D2R00B	MS90078-26	MDL2		313002	3AGTL2A-250V
F02B250V2 1/2A			MDL2 1/2		31302.5	3AGTL21/2A-250V
F02B250V2 8/10A			MDL2 8/10		31302.8	3AGTL28/10A-250V
F02B250V3A	F02D3R00B	MS90078-27	MDL3		313003	3AGTL3A-250V
F02B250V3 2/10A			MDL3 2/10		31303.2	3AGTL3 2/10A-250V
F02B250V4A			MDL4		313004	3AGTL4A-250V
F02B250V5A			MDL5		313005	3AGTL5A-250V
F02B250V6 1/4A			MDL6 1/4		3136.25	
F02B32V7A			MDL7		313007	
F02B32V8A	F02D8R00B		MDL8		313008	3AGTL8A32V
F02B32V10A			MDL10		313010	3AGTL10A32V
F02B32V12A			MDL12		313012	3AGTL12A32V
F02B32V15A			MDL15		313015	
F02B32V20A			MDL20		313020	3AGTL20A32V
F02B32V25A			MDL25		313025	
F02B32V30A			MDL30		313030	

1/ A letter “S” following the part number signifies silver plating.
2/ A second dash number (-1) signifies silver plating.

Referenced documents. In addition to MIL-PRF-15160, this document references the following:

MIL-STD-202

The margins of this specification sheet are marked with vertical lines to indicate where changes from the previous issue were made. This was done as a convenience only and the Government assumes no liability whatsoever for any inaccuracies in these notations. Bidders and contractors are cautioned to evaluate the requirements of this document based on the entire content irrespective of the marginal notations and relationship to the last previous issue.

Custodians:
Army - CR
Navy - SH
Air Force - 85
DLA - CC

Review activities:
Army - AR, AT, CR4, MI
Navy - AS, CG, MC, OS
Air Force - 19, 99

Preparing activity:
DLA - CC

(Project 5920-2014-014)

NOTE: The activities listed above were interested in this document as of the date of this document. Since organizations and responsibilities can change, you should verify the currency of the information above using the ASSIST Online database at https://assist.dla.mil.