INCH-POUND
MIL-PRF-15160/1H
6 November 2014
SUPERSEDING
MIL-PRF-15160/1G
15 October 2008

PERFORMANCE SPECIFICATION SHEET

# FUSES, INSTRUMENT, POWER, AND TELEPHONE (NONINDICATING), STYLE F01

This specification is approved for use by all Departments and Agencies of the Department of Defense.

The requirements for acquiring the product described herein shall consist of this specification sheet and MIL-PRF-15160.

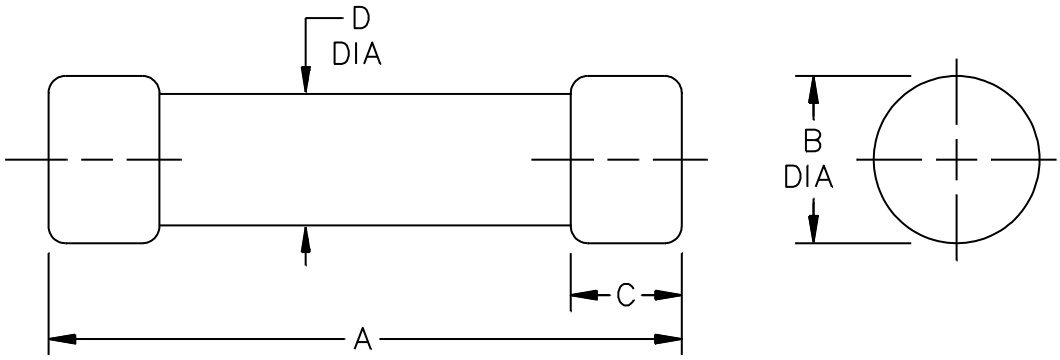


| Ltr | Inches | | mm | |
|---|---|---|---|---|
| | Min | Max | Min | Max |
| A | .969 | 1.031 | 24.61 | 26.19 |
| B | .246 | .254 | 6.25 | 6.45 |
| C | .240 | .260 | 6.10 | 6.60 |
| D | --- | .230 | --- | 5.84 |

NOTES:
1. Dimensions are in inches.
2. Metric equivalents are given for general information only.

FIGURE 1. Style F01, fuse.

REQUIREMENTS:

Interface and physical dimensions: See figure 1.

Terminals: Ferrule type.

Material: Brass, copper, phosphor bronze, or copper alloy.

Finish: Nickel, or silver plated when specified.

Strength: Method 211 of MIL-STD-202, test condition E, 10 inch-ounce torque between ferrules and fuse body.

Body: Glass tube.

Electrical:

Current rating: See table I.

Voltage rating: See table I.

Characteristic: See table I.

Resistance: See table I.

Overload interrupt: Maximum 1 hour at 135 percent of rated current and a maximum of 5 seconds at 200 percent of rated current.

Short circuit interrupt: See table I.

Shock: 1/100 ampere through 5 ampere; Method 213 of MIL-STD-202, test condition I.

Vibration: 1/100 ampere through 5 amperes; Method 204 of MIL-STD-202, test condition A (except 5g peak).

Type designation: Type designation shall be as specified in table I.

TABLE I. Type designation. 1/

| Type designation | | | | Maximum resistance ohms 2/ | AC short circuit interrupt. | | |
|---|---|---|---|---|---|---|---|
| Style | Characteristic | Maximum voltage | Current rating 3/ (amperes) | | 32 volts | 125 volts | 250 volts |
| F01 | A | 250V | 1/500A | 6,500 | 10,000A | 100A | 35A |
| F01 | A | 250V | 1/200A | 1,000 | 10,000A | 100A | 35A |
| F01 | A | 250V | 1/100A | 600 | 10,000A | 100A | 35A |
| F01 | A | 250V | 1/32A | 70 | 10,000A | 100A | 35A |
| F01 | A | 250V | 1/16A | 40 | 10,000A | 100A | 35A |
| F01 1/ | A | 250V | 1/10A | 9.8 | 10,000A | 100A | 35A |
| F01 | A | 250V | 1/8A | 9.5 | 10,000A | 100A | 35A |
| F01 1/ | A | 250V | 3/16A | 8.7 | 10,000A | 100A | 35A |
| F01 1/ | A | 250V | 2/10A | 8.5 | 10,000A | 100A | 35A |
| F01 | A | 250V | 1/4A | 8.2 | 10,000A | 100A | 35A |
| F01 | A | 250V | 3/8A | 6.2 | 10,000A | 100A | 35A |
| F01 1/ | A | 250V | 4/10A | 4.5 | 10,000A | 100A | 35A |
| F01 | A | 250V | 1/2A | 3.7 | 10,000A | 100A | 35A |
| F01 1/ | A | 125V | 6/10A | 2.5 | 10,000A | 100A | Not rated |
| F01 | A | 125V | 3/4A | 1.7 | 10,000A | 100A | Not rated |
| F01 1/ | A | 125V | 8/10A | 1.4 | 10,000A | 100A | Not rated |
| F01 | A | 125V | 1A | 1.3 | 10,000A | 100A | Not rated |
| F01 1/ | A | 125V | 1 1/4A | 1.00 | 10,000A | 100A | Not rated |
| F01 | A | 125V | 1 1/2A | 0.21 | 10,000A | 100A | Not rated |
| F01 1/ | A | 125V | 1 6/10A | 0.16 | 10,000A | 100A | Not rated |
| F01 | A | 125V | 2A | 0.12 | 10,000A | 100A | Not rated |
| F01 1/ | A | 125V | 2 1/2A | N/A | 10,000A | 10,000A | Not rated |
| F01 1/ | A | 125V | 3A | N/A | 10,000A | 10,000A | Not rated |
| F01 1/ | A | 125V | 3 2/10A | N/A | 10,000A | 10,000A | Not rated |
| F01 1/ | A | 125V | 4A | N/A | 10,000A | 10,000A | Not rated |
| F01 1/ | A | 125V | 5A | N/A | 10,000A | 10,000A | Not rated |

1/ Inactive for new design after 30 January 1970.
2/ Cold resistance at not greater than 10 percent load.
3/ For silver plated terminals, the designator "S" is added after the current rating.

VERIFICATION:

Qualification inspection is not applicable for the 1/500A thru 4/10A fuses of this specification sheet (see table I) and shall be replaced by acceptance testing consisting of Group A and Group B inspections per MIL-PRF-15160, prior to delivery.

INSPECTION ROUTINE:

Overload tests (group II): Fuses for the overload interrupt test shall be selected and tested as specified in table II for qualification test.

TABLE II. Overload tests.

| Overload 1/ (percent) | Number of samples | | |
|---|---|---|---|
| | 1/2A | 2A | 5A |
| 135 | 4 | 4 | 4 |
| 200 | 4 | 4 | --- |

1/ Room ambient.

Short circuit interrupt (group III): Four sample fuses of each rating shown in table III shall be tested at the values specified, followed by the insulation resistance test in accordance with MIL-PRF-15160 for qualification, and qualification retention. The ac voltage used shall be not less than the circuit voltage indicated and the fuses shall withstand the short circuits specified. Insulation resistance tests shall be conducted within 1 minute following the short circuit test.

TABLE III. Short circuit tests.

| Current rating | Short circuit current | AC test voltage |
|---|---|---|
| 1/2A | 35A | 250 |
| 2A | 100A | 125 |
| 5A | 10,000A | 125 |

Cross-reference: For applicable cross-reference see table IV. The existing stocks of superseded items may be used. When exhausted, the superseding parts shall be used.

TABLE IV. Cross reference.

| Superseding number | Superseded numbers | | | | | | | |
|---|---|---|---|---|---|---|---|---|
| | 81349 | 96906 | 71400 | 71400 | 75915 | 75915 | 75915 | 98997 |
| F01A250V1/500A 1/ | F01GR002A 1/ | MS90077-1 2/ | AGX1/500 | 8AG1/500 | 361.005 | | 364.002 | |
| F01A250V1/200A | F01GR005A | MS90077-2 | AGX1/200 | 8AG1/200 | 361.002 | | 364.005 | |
| F01A250V1/100A | F01GR010A | MS90077-3 | AGX1/100 | 8AG1/100 | 361.010 | | 364.010 | |
| F01A250V1/32A | F01GR031A | MS90077-4 | AGX1/32 | 8AG1/32 | 361.031 | | 364.031 | |
| F01A250V1/16A | F01GR062A | MS90077-5 | AGX1/16 | 8AG1/16 | 361.062 | | 364.062 | 8AG1/16 |
| F01A250V1/10A | F01GR100A | | AGX1/10 | 8AG1/10 | 361.100 | | 364.100 | 8AG1/10 |
| F01A250V1/8A | F01GR125A | MS90077-6 | AGX1/8 | 8AG1/8 | 361.125 | 362.125 | 364.125 | 8AG1/8 |
| F01A250V3/16A | | | AGX3/16 | 8AG3/16 | 361.187 | | 364.187 | 8AG3/16 |
| F01A250V2/10A | | | AGX2/10 | 8AG2/10 | 361.200 | | 364.200 | 8AG2/10 |
| F01A250V1/4A | F01GR250A | MS90077-7 | AGX1/4 | 8AG1/4 | 361.250 | 362.250 | 364.250 | 8AG1/4 |
| F01A250V3/8A | F01GR375A | MS90077-8 | AGX3/8 | 8AG3/8 | 361.375 | 362.375 | 364.375 | 8AG3/8 |
| F01A250V4/10A | | | AGX4/10 | 8AG4/10 | 361.400 | | 364.400 | 8AG4/0 |
| F01A250V1/2A | F01GR500A | MS90077-9 | AGX1/2 | 8AG1/2 | 361.500 | 362.500 | 364.500 | 8AG1/2 |
| F01A125V6/10A | | | AGX6/10 | 8AG6/10 | | | | 8AG6/10 |
| F01A125V3/4A | F01GR750A | MS90077-10 | AGX3/4 | 8AG3/4 | 361.750 | 362.750 | 364.750 | 8AG3/4 |
| F01A125V8/10A | | | AGX8/10 | 8AG8/10 | | | | 8AG8/10 |
| F01A125V1A | F01G1R00A | MS90077-11 | AGX1 | 8AG1 | 361001 | 362001 | 364001 | 8AG1 |
| F01A125V1 1/4A | | | | 8AG1 1/4 | | | | 8AG1 1/4 |
| F01A125V1 1/2A | F01G1R50A | MS90077-12 | AGX1 1/2 | 8AG1 1/2 | 36101.5 | 36201.5 | 36401.5 | 8AG1 1/2 |
| F01A125V1 6/10A | | | | 8AG1 6/10 | | | | 8AG1 6/10 |
| F01A125V2A | F01G2R00A | MS90077-13 | AGX2 | 8AG2 | 361002 | 362002 | 364002 | 8AG2 |
| F01A125V2 1/2A | | | AGX2 1/2 | | | | | |
| F01A125V3A | | | AGX3 | | 361003 | 362003 | | |
| F01A125V3 1/2A | | | AGX3 1/2 | | | | | |
| F01A125V4A | | | AGX4 | | 361004 | | | |
| F01A125V5A | | | AGX5 | | 361005 | 362005 | | |

1/ A letter “S” following the part number signifies silver plating.
2/ A second dash number (-1) signifies silver plating.

Reference documents. In addition to MIL-PRF-15160, this document references the following:

MIL-STD-202

The margins of this specification sheet are marked with vertical lines to indicate where changes from the previous issue were made. This was done as a convenience only and the Government assumes no liability whatsoever for any inaccuracies in these notations. Bidders and contractors are cautioned to evaluate the requirements of this document based on the entire content irrespective of the marginal notations and relationship to the last previous issue.

Custodians:
Army - CR
Navy - SH
Air Force - 85
DLA - CC

Preparing activity:
DLA - CC

(Project 5920-2014-013)

Review activities:
Army - AT, CR4, MI
Navy - AS, CG, MC, OS
Air Force - 19, 99

NOTE: The activities listed above were interested in this document as of the date of this document. Since organizations and responsibilities can change, you should verify the currency of the information above using the ASSIST Online database at https://assist.dla.mil.