INCH-POUND

MIL-PRF-14409/3D
9 July 2009
SUPERSEDING
MIL-PRF-14409/3C
25 July 2001

PERFORMANCE SPECIFICATION SHEET

CAPACITORS, VARIABLE (PISTON TYPE, TUBULAR TRIMMER), STYLE PC37

This specification sheet is approved for use by all Departments and Agencies of the Department of Defense.

The requirements for acquiring the capacitors described herein shall consist of this specification sheet and MIL-PRF-14409.

Inactive for new design after 9 June 1969.
For replacement purposes only.

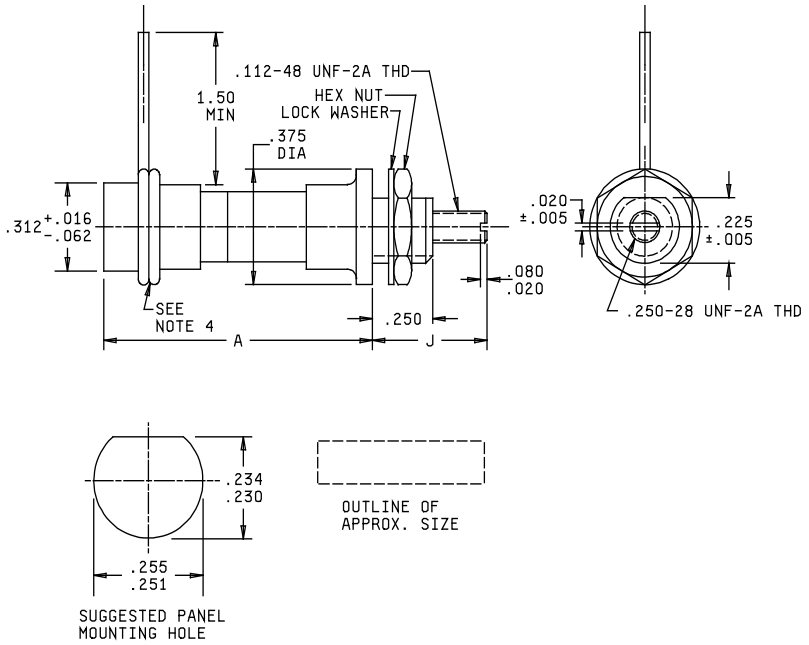

Inches	mm
.005	0.13
.016	0.41
.020	0.51
.062	1.57
.080	2.03
.112	2.84
.225	5.72
.230	5.84
.234	5.94
.250	6.35
.251	6.38
.255	6.48
.312	7.92
.375	9.53
1.50	38.10

NOTES:
1. Dimensions are in inches.
2. Metric equivalents (to the nearest 0.01 mm) are given for general information only.
3. Unless otherwise specified, tolerance is ±.016.
4. There shall be a minimum of one and one-half turns of AWG size 22 wire around the body. These turns of wire shall be completely soldered to the body.
5. The flat on the mounting bushing shall extend to the mounting surface of the shoulder.
6. For dimensions A and J, see table I.

FIGURE 1. Dimensions and configuration.

REQUIREMENTS:

Dimensions: See figure and table I.

DC voltage rating: 750 volts.

Construction: Quartz, see figure and table I.

Capacitance range: See table I.

Insulation resistance (IR): Method 302 of MIL-STD-202, test condition B (500 volts ± 10 percent); not less than 1,000,000 megohms throughout temperature range.

Quality factor (Q): See table I.

Thermal shock: Method 107 of MIL-STD-202, test condition A, except that the step 3 temperature shall be 150°C ± 5°C.

Barometric pressure (reduced): Not applicable.

TABLE I. Capacitor characteristics.

Part or Indentifying Number (PIN)	Capacitance range		Dimensions 1/		Q	Dielectric material
	Min	Max	J (max)	A ± .031 (0.79)		
	pF	pF				
PC37Q4R5	0.7	4.5	.547 (13.89)	.438 (11.13)	1,500	Quartz
PC37Q060	0.6	6.0	.906 (23.01)	.625 (15.88)	1,500	Quartz
PC37Q100	0.8	10.0	.891 (22.63)	1.000 (25.40)	1,500	Quartz
PC37Q210	9.0	21.0	1.000 (25.40)	1.594 (40.49)	1,500	Quartz

1/ Metric equivalents (to the nearest 0.01 mm) are given for general information only. Millimeters are in parentheses.

Changes from previous issue. The margins of this specification are marked with vertical lines to indicate where changes from the previous issue were made. This was done as a convenience only and the Government assumes no liability whatsoever for any inaccuracies in these notations. Bidders and contractors are cautioned to evaluate the requirements of this document based on the entire content irrespective of the marginal notations and relationship to the last previous issue.

Referenced documents: In addition to MIL-PRF-14409, this document also references MIL-STD-202.

Custodians:
Army - CR
Navy - EC
Air Force - 85
DLA – CC

Preparing activity:
DLA - CC

(Project 5910-2008-032)

Review activities:
Navy - AS, MC, OS
Air Force - 99

NOTE: The activities listed above were interested in this document as of the date of this document. Since organizations and responsibilities can change, you should verify the currency of the information above using the ASSIST Online database at http://assist.daps.dla.mil/.