INCH POUND

MIL-PRF-14409/19D
9 July 2009
SUPERSEDING
MIL-PRF-14409/19C
25 July 2001

PERFORMANCE SPECIFICATION SHEET

CAPACITORS, VARIABLE (PISTON TYPE, TUBULAR TRIMMER), STYLES PC19 AND PC47

This specification sheet is approved for use by all Departments and Agencies of the Department of Defense.

The requirements for acquiring the capacitors described herein shall consist of this specification sheet and MIL-PRF-14409.

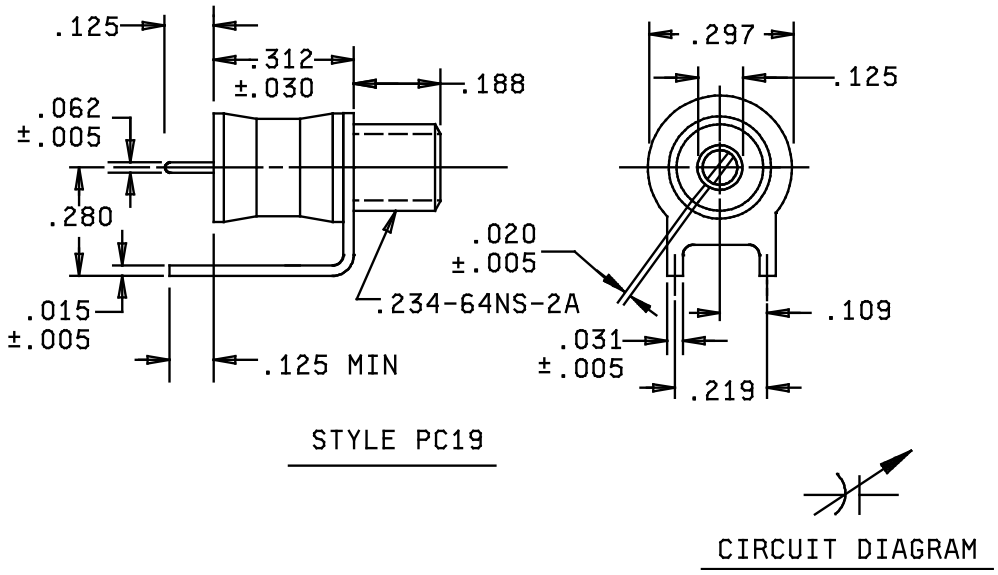

FIGURE 1. Dimensions and configurations.

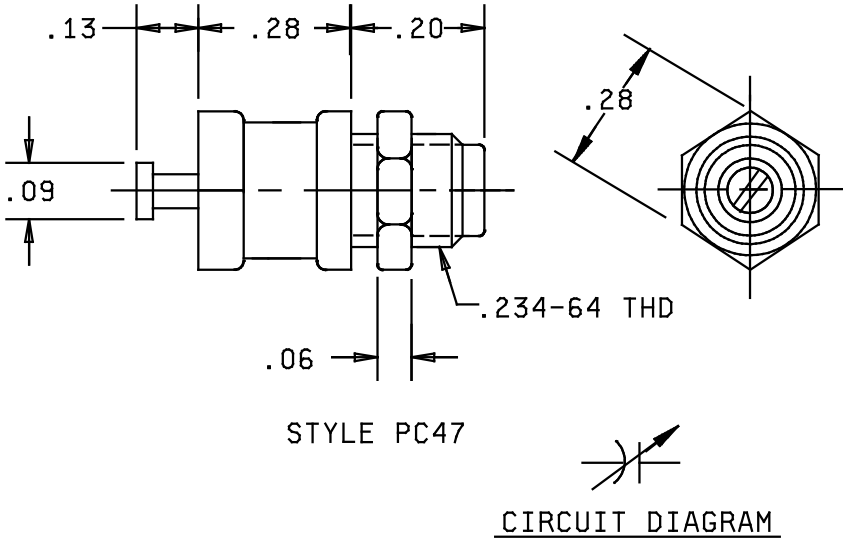

Inches	mm
.005	0.13
.015	0.38
.020	0.51
.030	0.76
.031	0.79
.06	1.5
.062	1.57
.09	2.3
.109	2.77
.125	3.18
.13	3.30
.188	4.78
.219	5.56
.234	5.94
.280	7.11
.297	7.54
.312	7.92

NOTES:
1. Dimensions are in inches.
2. Metric equivalents are for information only.
3. Unless otherwise specified, tolerance is ±.016 (0.41 mm).
4. Solder, if used, shall be high temperature solder having a melting point of 300°C +50°C, -5°C.

FIGURE 1. Dimensions and configurations - Continued.

REQUIREMENTS:

Dimensions and configuration: See figure 1 and table I.

DC voltage rating: See table I.

Construction: Alumina ceramic, O-ring sealed.

Dielectric: Air.

Capacitance range: See table I.

Insulation resistance: Shall be not less than 1,000,000 megohms at room ambient temperature and not less than 100,000 megohms at 125°C.

Test condition - 250 volts ±10 percent.

Quality factor (Q): See table I (measured at frequency of 100 ±10 MHz).

Driving torque: Greater than or equal to 0.5 and less than or equal to 5.0 ounce-inches from -55°C to +125°C.

Thermal shock: Method 107 of MIL-STD-202, test condition A, except step 3 temperature shall be +125° ±5°C.

Immersion: In accordance with method 104 of MIL-STD-202, test condition A.

Resistance to soldering heat: In accordance with MIL-PRF-14409.

Seal: In accordance with MIL-PRF-14409.

TABLE I. Capacitor characteristics.

Part or Identifying Number (PIN) 1/	Capacitance range		Voltage rating	Q minimum
	pF	pF		
PC--L100	1.0	10	250	5,000
PC--L140	1.0	14	125	3,000

1/ Complete PIN shall include additional symbols to indicate style.

Changes from previous issue. The margins of this specification are marked with vertical lines to indicate where changes from the previous issue were made. This was done as a convenience only and the Government assumes no liability whatsoever for any inaccuracies in these notations. Bidders and contractors are cautioned to evaluate the requirements of this document based on the entire content irrespective of the marginal notations and relationship to the last previous issue.

Referenced documents: In addition to MIL-PRF-14409, this document also references MIL-STD-202.

Custodians:
Army - CR
Navy - EC
Air Force – 85
DLA - CC

Preparing activity:
DLA - CC

(Project 5910-2008-034)

Review activities:
Navy - AS, MC, OS
Air Force - 99

NOTE: The activities listed above were interested in this document as of the date of this document. Since organizations and responsibilities can change, you should verify the currency of the information above using the ASSIST Online database at http://assist.daps.dla.mil/.