INCH-POUND

MIL-PRF-1/770G
22 July 2016
SUPERSEDING
MIL-PRF-1/770F
15 March 2011

PERFORMANCE SPECIFICATION SHEET

ELECTRON TUBE, MAGNETRON
TYPES 5586 AND 5657

This specification is approved for use by all Departments and Agencies of the Department of Defense.

The requirements for acquiring the electron tube described herein shall consist of this document and the latest issue of MIL-PRF-1.

DESCRIPTION: Pulsed, tunable frequency range (type 5586) 2,700 to 2,900 MHz (type 5657) 2,900 to 3,100 MHz, rated peak power output 800 kW, separate magnet, air cooled.

ABSOLUTE RATINGS:

Parameter:	Ef	tk	tpc	Du	epy	ib	pi	Pi	T(anode)	Alt
Unit:	V	sec	µs	---	kv	a	kw	W	°C	ft
Maximum:	17.6	---	2.50	0.001	32.5	70	2,200	1,300	100	10,000
Minimum:	14.4	120	---	----	---	----	---	---	---	---

PHYSICAL CHARACTERISTICS:

Dimensions: See figure 1
Magnet: 3/

TEST CONDITIONS:

Parameter	Ef	tk	tpc	trv	Du	Ib	VSWR	H
Unit:	V	sec	µs	µs	---	mA dc	---	Gauss
Test 1:								
Maximum:	---	120	1.10	0.20	---	---	1.15	---
	4/	---	---	---	0.0005	35	---	2,700
Minimum:	---	---	0.90	0.10	---	---	---	---
Test 2:								
Maximum:	---	120	2.20	0.20	---	---	1.15	---
	4/	---	---	---	0.0006	35	---	2,700
Minimum:	---	---	1.80	0.10	---	---	---	--- 3/

Test frequencies (MHz)		
F	Type 5586	Type 5657
1	2,700	2,900
2	2,800	3,000
3	2,900	3,100

See footnotes at end of table I.

GENERAL:
Qualification: Required.
Magnetron tuning mechanism requirements: see page 8, NOTE 15.
Tuning spline location requirements: see page 9, Figure 2 NOTE.
Tube type 5657: Tuning spline clockwise rotation increases frequency.

TABLE I. Testing and inspection.

Inspection	MIL-STD-1311 Method	Test	Conditions	Symbol	Limits		Unit
					Min	Max	
Qualification inspection							
Temperature coefficient	4027	1	F = F1, F2, and F3; T = 60°C to 90°C	$\frac{\Delta F}{\Delta T}$	---	0.07	MHz/°C
Low-temperature operation	1047	1	tk = 180 (max); F = F2	---	---	---	---
High-frequency vibration	1031	---	No voltages	---	---	---	---
Conformance inspection, part 1			1/				
Pressurizing	4003	----	P = 40 to 45 lb_f/in^2	---	---	---	---
Heater current	4289	---	Ef = 16.0 V; tk = 120 4/	If	2.8	3.4	A
Power output (1)	4250	1	F = F1, F2, and F3; t = 300 sec (max)	Po	400	---	W
Power output (2)	4250	2	F = F1; t = 300 sec (max)	Po	400	---	W
Stability	4315	1, 2	2/	MP	---	1.0	%
Pulse voltage	4306	1	F = F1, F2, and F3				
			Type 5586	epy	27	32	kv
			Type 5657	epy	27.5	32.5	kv
Mechanical tuning	4223	1	Type 5586				
			Lower limit	F	---	2,700	MHz
			Upper limit	F	2,900	---	MHz
Mechanical tuning range	4223	1	Type 5657				
			Lower limit	F	---	2,900	MHz
			Upper limit	F	3,100	---	MHz
RF bandwidth	4308	1		BW	---	$\frac{2.5}{tpc}$	MHz
Conformance inspection, part 2							
Low-frequency vibration	1031	---	No voltages	---	---	---	---
Frequency pulling figure	4310	1	Ib = 20 to 35 mA dc	ΔF	---	15	MHz
Permanence of marking	1105	---		---	---	---	---
Conformance inspection, part 3							
Life-test provisions	---	1	Group D	t	500	---	hrs
Life-test end points:	---						
Power output	4250	1	F = F1, F2, and F3	Po	320	---	W
RF bandwidth	4308	1		BW	---	$\frac{2.5}{tpc}$	MHz

See footnotes at end of table.

TABLE I. Testing and inspection - Continued.

1/ This specification sheet uses accept on zero defect sampling in accordance with MIL-PRF-1, table III.

2/ The missing pulses, MP, shall be counted during the last 3 minutes of a test interval not to exceed 6 minutes. A missing pulse is defined as a rf pulse whose average energy within a ± 1 percent frequency range of the normal operating frequency is 70 percent or less than that of the normal pulse.

3/ The magnetic field should be calibrated in accordance with the following procedure:

a. With a conventional .125 inch (3.18 mm) pole piece attached to the pole face of the magnet opposite the magnetron tuner as shown on figure 3.

b. The magnetic field should then be adjusted for 2,700 gauss at the center of the gap.

c. Remove the conventional .125 inch (3.18 mm) pole piece and replace it with the magnet with the distortion pole piece as shown on figure 3.

d. Coil No. 400; pole tip 1.8 inch (45.72 mm) plus .005 inch (0.13 mm) minus .001 inch (0.03 mm).

4/ During high-voltage operation, it is essential to operate the heater according to the following schedule:

Pi (watts)	Ef (volts)
1,000 to 1,200	8.0
800 to 1,000	10.5
600 to 800	13.0
400 to 600	15.0
Less than 400	16.0

NOTE: The above schedule is valid only for repetition rates of 300 pps, or greater.

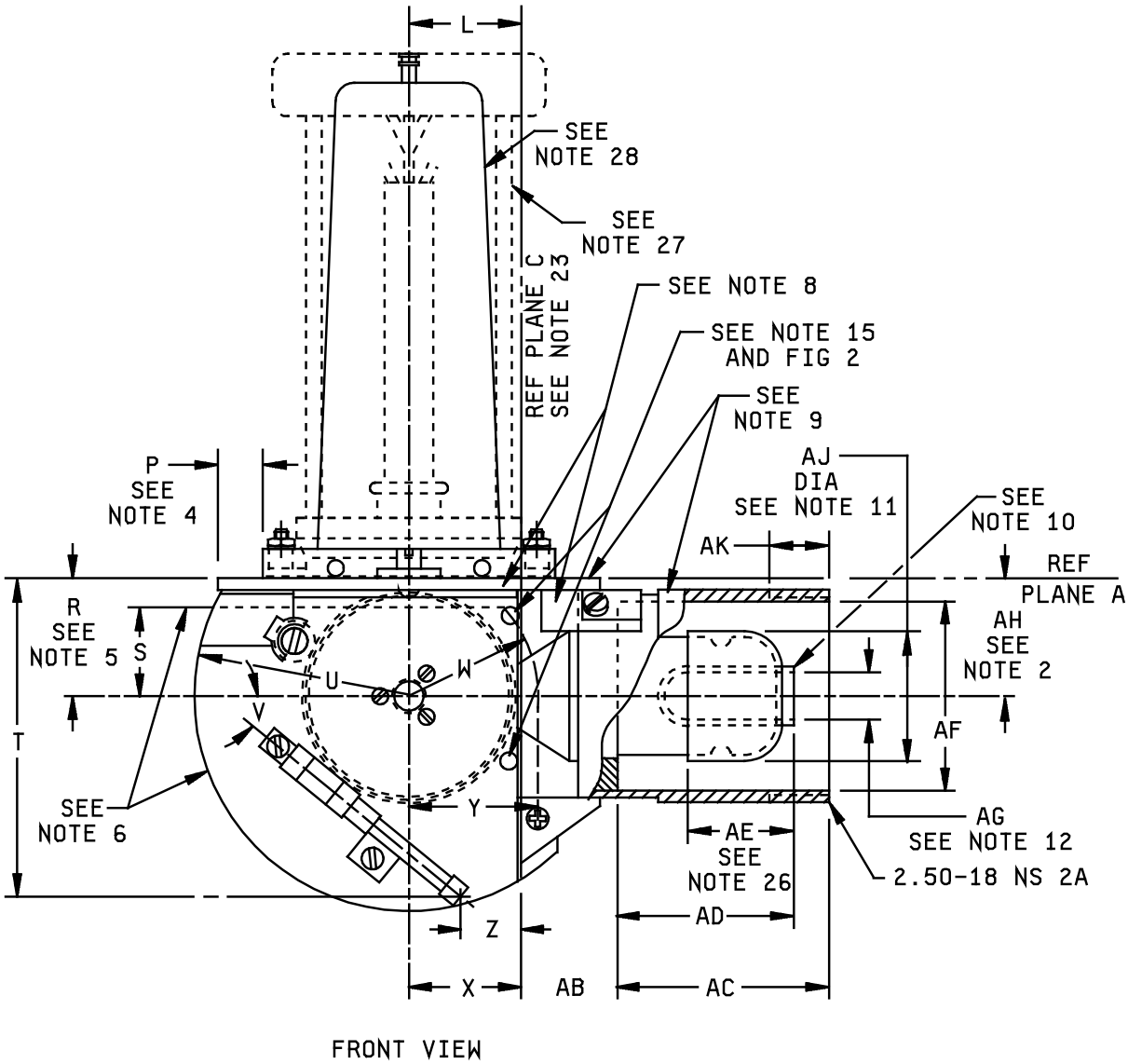

FIGURE 1. Outline drawing of electron tube types 5586 and 5657.

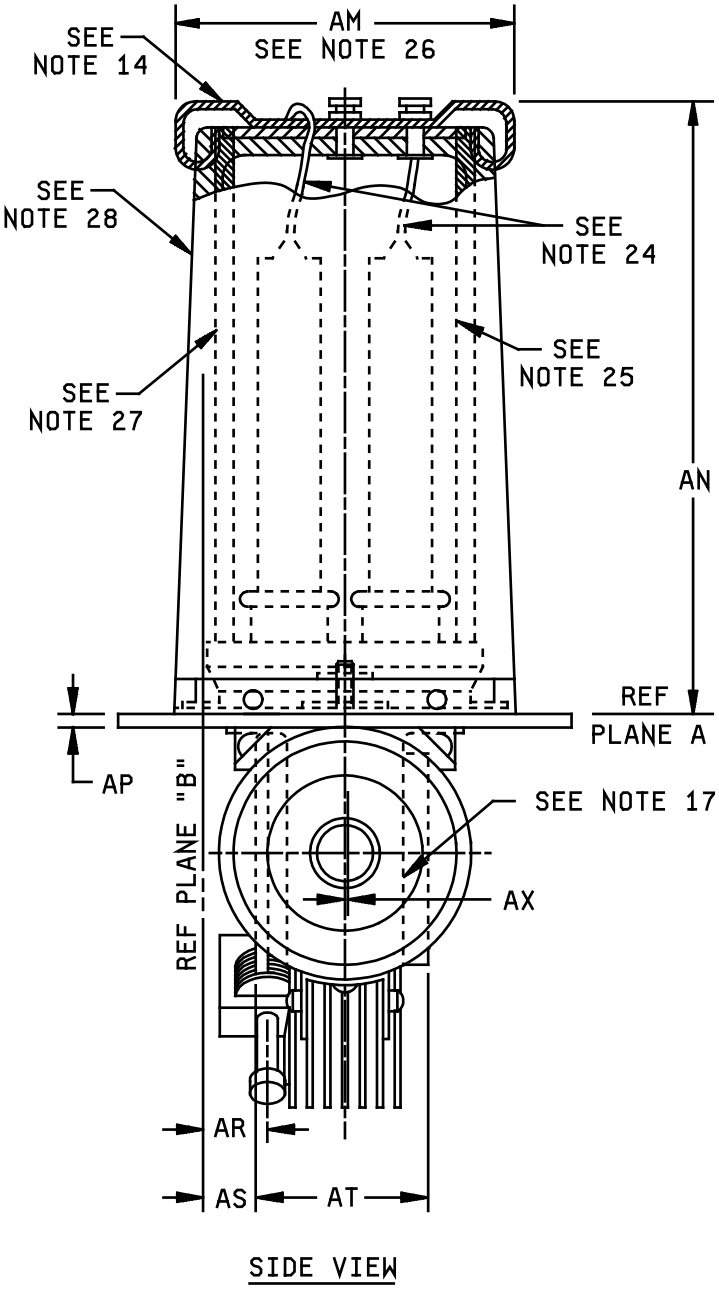

FIGURE 1. Outline drawing of electron tube types 5586 and 5657 - Continued.

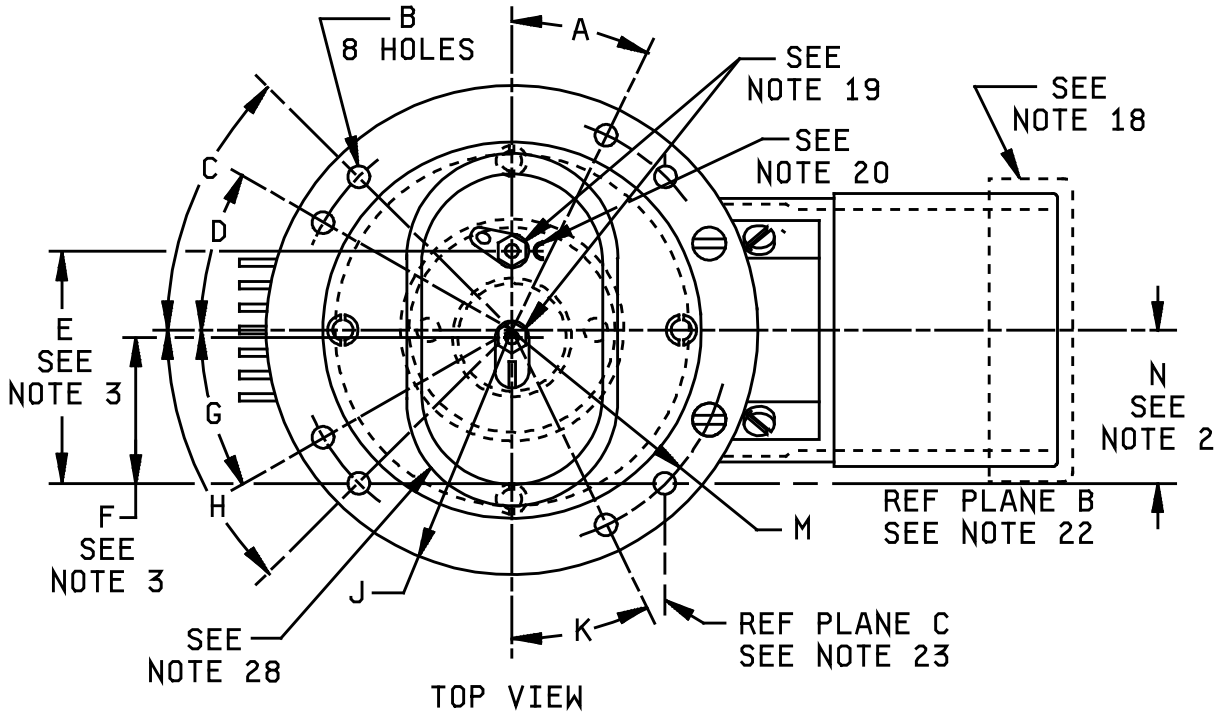

FIGURE 1. Outline drawing of electron tube types 5586 and 5657 - Continued.

Ltr	Dimensions				Ltr	Dimensions			
	Inches		Millimeter			Inches		Millimeters	
	Min	Max	Min	Max		Min	Max	Min	Max
Conformance inspection, part 1 (see note 1)					Conformance inspection, part 2 - Continued				
N	1.417	1.457	35.99	37.01	P	.500	---	12.70	---
AC	2.287	2.307	58.09	58.60	S	1.063	---	27.00	---
AD	2.060	2.110	52.32	53.59	U	---	2.656 R	---	67.46 R
AE	1.125	---	28.58	---	V	30°	35°	30°	35°
AF	2.314	2.328	58.78	59.13	W	1.500 R	---	38.10 R	---
AG	.550	.560	13.97	14.22	Y	1.500	---	38.10	---
AH	1.420	1.460	36.07	37.08	AB	.803	.833	20.40	21.16
AJ	---	1.620 DIA	---	41.15 DIA	AK	.593	---	15.06	---
AR	.438	.688	11.13	17.48	AM	---	3.531	---	89.69
AS	.525	.625	13.34	15.88	AN	6.219	6.407	157.96	162.74
AT	---	1.740	---	44.20	Reference dimensions				
AU	11°30'	16°30'	11°30'	16°30'	E	2.156		54.76	
Conformance inspection, part 2					F	1.359		34.52	
A	29°48'	30°12'	29°48'	30°12'	L	1.437		36.50	
B	.205 DIA	.215 DIA	5.21 DIA	5.46 DIA	R	1.440		36.58	
C	44°48'	45°12'	44°48'	45°12'	T	3.500		88.90	
D	29°48'	30°12'	29°48'	30°12'	X	1.437		36.50	
G	29°48'	30°12'	29°48'	30°12'	Z	.756		19.20	
H	44°48'	45°12'	44°48'	45°12'	AP	.187		4.75	
J	2.266 R	2.296 R	57.56 R	58.32 R	AV	.313		7.95	
K	29°48'	30°12'	29°48'	30°12'	AW	2.812		71.42	
M	2.029 R	2.035 R	51.54 R	51.69 R	AX	.025		0.64	

FIGURE 1. Outline drawing of electron tube types 5586 and 5657 - Continued.

NOTES:

1. This specification sheet uses accept on zero defect sampling in accordance with MIL-PRF-1, table III.
2. Applies to location of center line of guard pipe only.
3. The center of the jack holes shall be within a radius of .100 inches (2.54 mm) of the location specified, but shall be spaced .797 inch (20.24 mm) ± .015 inch (0.38 mm) with respect to each other.
4. This annular area shall be flat within .015 inch (0.38 mm) a thickness gauge .125 inch (3.18 mm) wide shall not enter more than .250 inch (6.35 mm).
5. The periphery of the anode shall lie within a 2.160 inch (54.86 mm) diameter circle located as specified for non-tunable side of anode.
6. Maximum width specified applies to area defined by broken line and circumference of radiator.
7. Paint with heat-resistant, non-corrosive paint. The following shall be free from paint; top surface of mounting plate, parts above mounting plate, screw threads on guard pipe, and all surfaces inside guard pipe, tuning gear, stop and worm shaft assembly.
8. All solder joints on mounting plate and guard pipe shall be soldered to provide a hermetic seal.
9. Tube shall be supported by mounting plate or guard pipe.
10. No sharp edges on outside diameter at end of inner conductor.
11. Center line of maximum diameter shall be concentric with center line of guard pipe to within .040 inch (1.02 mm).
12. Applies to inner conductor insert only. Center line of inner conductor insert shall be concentric with center line of guard pipe to within .025 inch (0.64 mm).
13. Applies to straight portion of inner conductor wall.
14. Corona ring shall fall within a 3.662 inch (93.01 mm) diameter circle concentric to center of bolt hole circle, applicable to old type insulator only.
15. Tuning mechanism will provide full range of tuning with five maximum complete revolutions of the large tuning gear for tube type 5586, and four minimum revolutions of the large tuning gear for tube type 5657.
16. Spline for adjusting tuning mechanism is as follows: 12 teeth, 48 pitch, .250 inch (6.35 mm) pitch diameter.
17. This dimension shows relation between a plane passing through lateral center of anode and a plane through center of guard pipe.
18. Protective guard for shipping purposes.
19. Hex locking head, banana pin jack .594 inch (15.09 mm) long, and .169 inch (4.29 mm) ± .005 inch (0.13 mm) diameter.
20. Common cathode connection marked with letter "C" at either top or side of base tube insulator.
21. Reference plane "A" is defined as a plane passing along the face of the mounting plate.
22. Reference plane "B" is defined as a plane perpendicular to plane "A" and passing through the center of the holes as shown.
23. Reference plane "C" is defined as a plane mutually perpendicular to planes "A" and "B" and passing through the center of the hole as shown.
24. Leads shall be flexible and slack.
25. Pyrex glass or approved equal.
26. Applicable to old type insulator only.
27. Old glass and metal type protector, shown only for information purposes.
28. One piece filament pipe protector.
29. Clearance to adapter guard pipe shall be sufficient to allow use of SS White No. 2666X or equal, end fitting .406 inch (10.31 mm) diameter.

FIGURE 1. Outline drawing of electron tube types 5586 and 5657 - Continued.

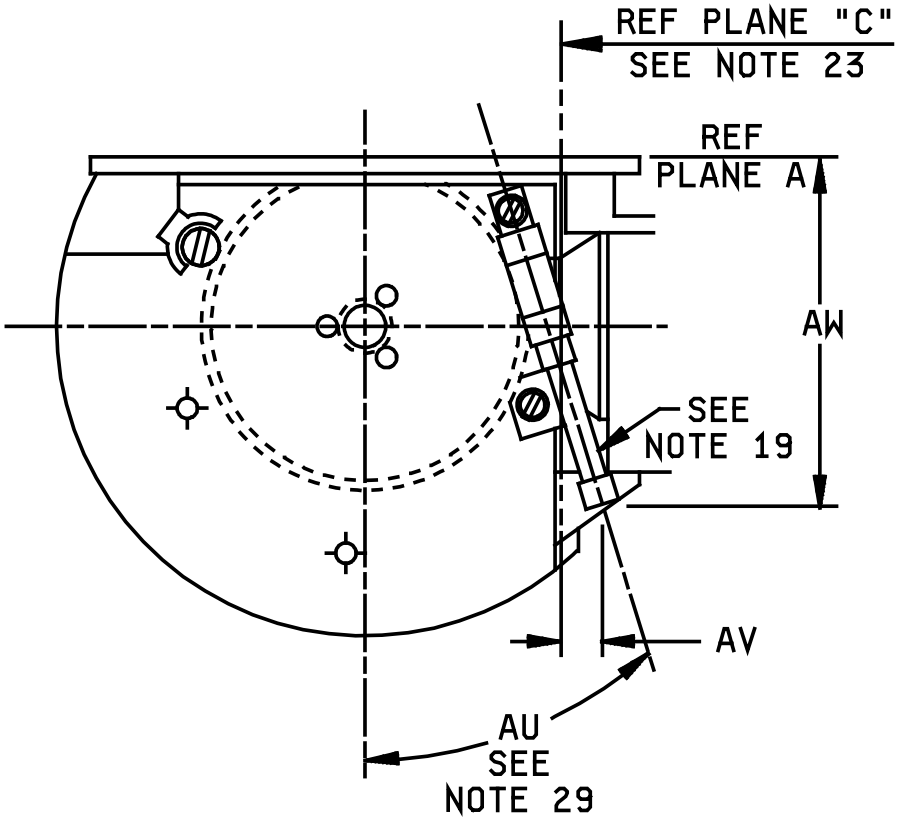

NOTE: Required location for tube type 5657. Tube to be supplied with spline located as specified by contractor for tube type 5586.

FIGURE 2. Alternate location of tuning spline.

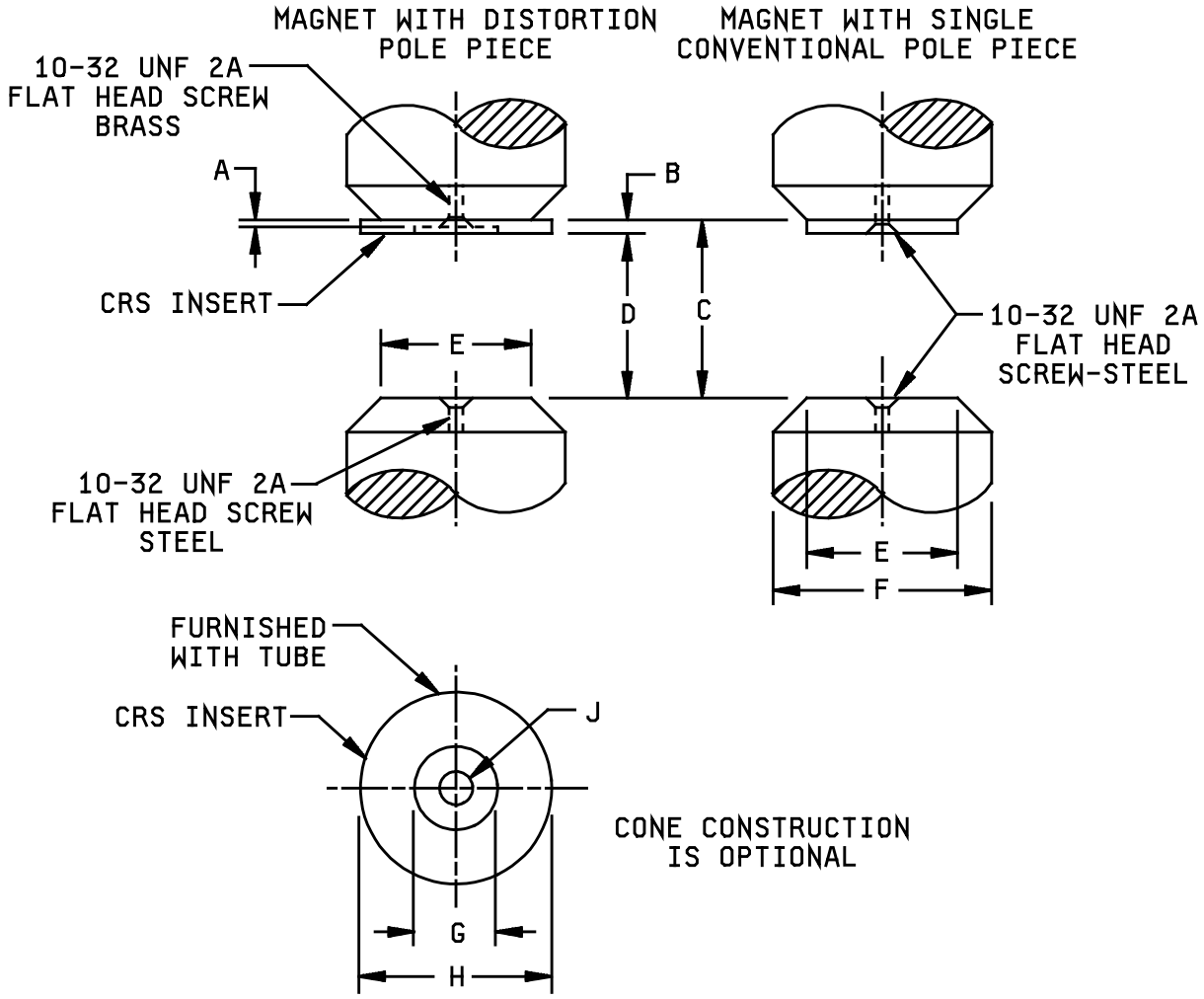

Ltr	Dimensions			
	Inches		Millimeters	
	Min	Max	Min	Max
A	.026	.036	0.66	0.91
B	.120	.130	3.05	3.30
C	1.920	1.930	48.77	49.02
D	1.795	1.805	45.59	45.85
E	1.620 DIA	1.630 DIA	41.15 DIA	41.40 DIA
F	2.245 DIA	2.255 DIA	57.02 DIA	57.28 DIA
G	.781 DIA	.791 DIA	19.84 DIA	20.09 DIA
H	1.995 DIA	2.005 DIA	50.67 DIA	50.93 DIA
J	.307 DIA	.317 DIA	7.80 DIA	8.05 DIA

FIGURE 3. Magnetic field calibrators.

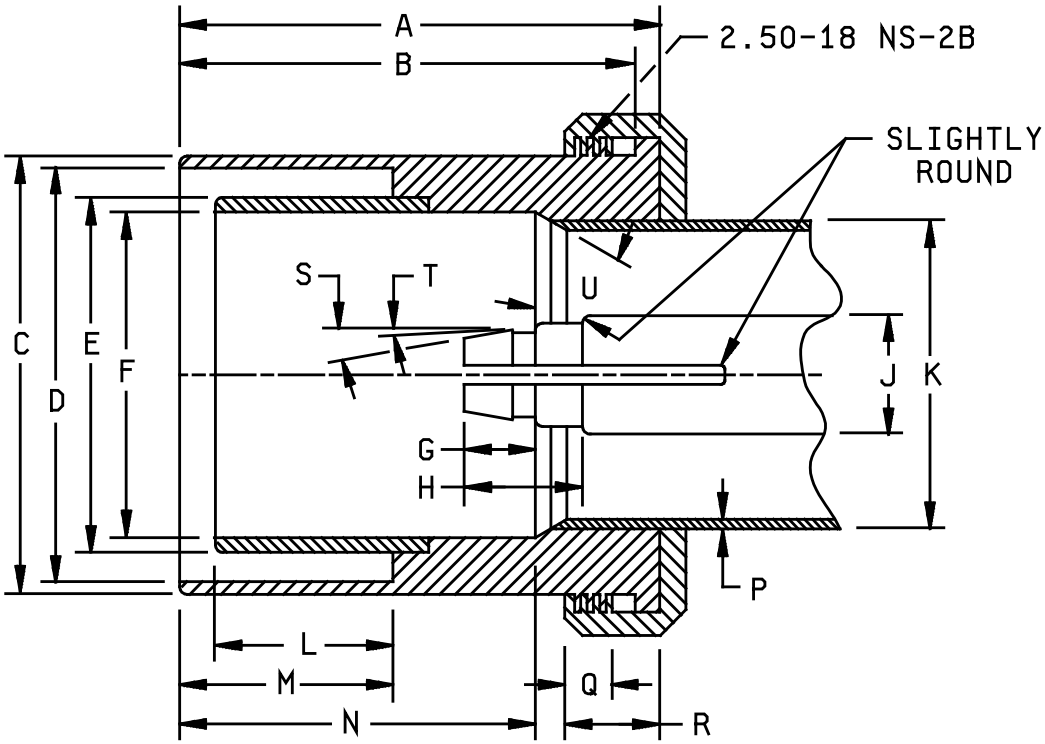

Ltr	Dimensions			
	Inches		Millimeters	
	Min	Max	Min	Max
A	2.526	2.536	64.16	64.41
B	2.397	2.407	60.88	61.14
C	2.308	2.312	58.62	58.72
D	2.183	2.187	55.45	55.55
E	1.873	1.877	47.57	47.67
F	1.718	1.722	43.64	43.74
G	.370	.380	9.40	9.65
H	.620	.630	15.75	16.00
J	.620 DIA	.630 DIA	15.75 DIA	16.00 DIA
K	1.620 DIA	1.630 DIA	41.15 DIA4	41.40 DIA
L	.934	.940	23.72	23.88
M	1.122	1.128	28.50	28.65
N	1.870	1.880	47.50	47.75
P	.044	.054	1.12	1.37
Q	.245	.255	6.22	6.48
R	.495	.505	12.57	12.83

FIGURE 4. Test coupling (not furnished with tube).

Referenced documents. In addition to MIL-PRF-1, this specification sheet references MIL-STD-1311.

The margins of this specification are marked with vertical lines to indicate where changes from the previous issue were made. This was done as a convenience only and the Government assumes no liability whatsoever for any inaccuracies in these notations. Bidders and contractors are cautioned to evaluate the requirements of this document based on the entire content irrespective of the marginal notations and relationship to the last previous issue.

Custodians:
Army - CR
Navy - EC
Air Force - 85
DLA - CC

Preparing activity:
DLA - CC

Project (5960-2016-027)

Review Activities:
Air Force - 99

NOTE: The activities listed above were interested in this document as of the date of this document. Since organizations and responsibilities can change, you should verify the currency of the information above using the ASSIST Online database at https://assist.dla.mil/.