INCH-POUND

MIL-PRF-1/690E
20 May 2014
SUPERSEDING
MIL-PRF-1/690D
10 April 2007

PERFORMANCE SPECIFICATION SHEET

ELECTRON TUBE, GAS

TYPE 5517

INACTIVE FOR NEW DESIGN
AFTER 21 JULY 1997

This specification is approved for use by all Departments and Agencies of the Department of Defense.

The requirements for acquiring the electron tube described herein shall consist of this document and the latest issue of MIL-PRF-1.

DESCRIPTION: Rectifier, half-wave, cold cathode.

See figure 1.

Mounting position: Any.

Weight: 0.32 ounce (9.1 grams) nominal.

ABSOLUTE RATINGS:

Parameter:	epx	Epp	Cℓ	ib	Rℓ	Io	i surge	TA	Zp
Unit:	v	V ac	μF	mA	Ohms	mA dc	mA	°C	Ohms
Maximum:	2,800	---	---	100	---	12	300	+60	---
Minimum:	---	500	---	---	---	---	---	-50	5,000
Test conditions:	---	1,200 (see note 1)	2.0 ±10%	---	90,000 ± 1,000	---	---	---	---

GENERAL:

Qualification: Not required.

This specification sheet uses accept on zero defect sampling in accordance with MIL-PRF-1, table III.

ALTERNATE OUTLINES

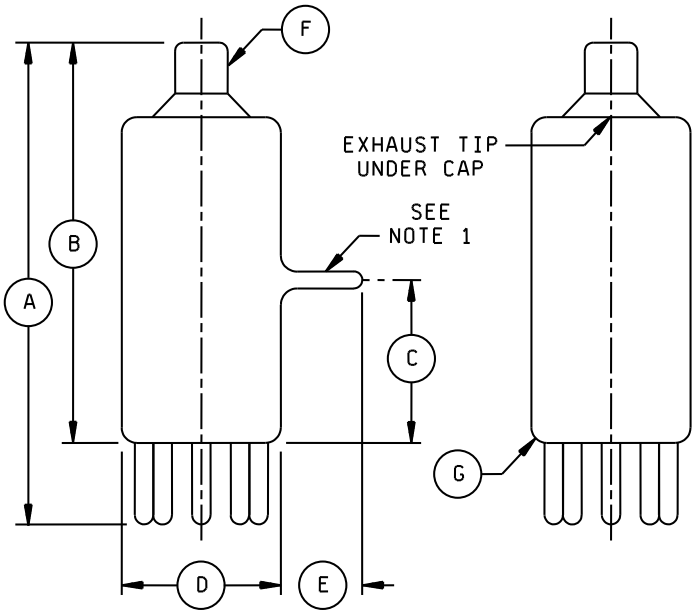

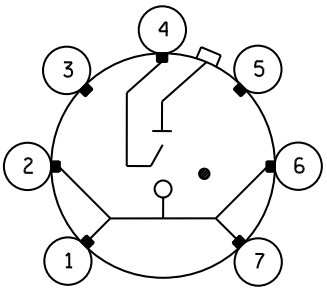

PIN CONNECTION
SCHEMATIC

Dimensions in inches				
Ltr	Inches		Millimeters	
	Min	Max	Min	Max
Conformance inspection, part 2				
A	---	2.250	---	57.15
B	1.780	1.970	45.21	50.04
C	.750	---	19.05	---
D	---	.750	---	19.05
E	---	.375	---	9.53
Conformance inspection, part 3 (see note 2)				
F	Cap: C1-3 (EIA)			
G	Base: E7-1 and envelope: 5-2 (T-5 1/2) (EIA)			

NOTES:
1. Exhaust tip will lie in sector between pins 1 and 7.
2. These dimensions shall be checked annually with an accept on zero defect sampling plan using four test samples.

   In case of failure after sampling, the falling dimension(s) shall become conformance inspection, part 2, for three successful consecutive submissions, at which time the test may revert to the conformance inspection, part 3 basis.

FIGURE 1. Outline drawing of electron tube type 5517.

TABLE I. Testing and inspection.

Requirement or test	MIL-STD-1311 Method	Notes	Conditions	Symbol	Limits		Unit
					Min	Max	
Conformance inspection, part I							
Peak emission by voltage drop	1231	2/	ib = 100 mA	etd	---	125	v
Operation of rectifiers	1353	---	Zp = 6,000 ohms (min) (see figure 3)	Io	12.0	---	mA dc
Conformance inspection, part 2							
Low-frequency vibration	1031	---	No voltages applied	---	---	---	---
Ionization voltage	3347	---	See figure 2	Epp	---	400	V ac
Conformance inspection, part 3							
Life test	---	---	Group A; Zp/Io = 12.0 mA dc (min); t = 500 hours (see figure 3)	---	---	---	---
Life-test end points:	---	---					
Operation of rectifiers	1357	---		Io	11.0	---	mA dc
Ionization voltage	3347	---		Epp	---	450	V ac
Peak emission by voltage drop	1231	---		etd	---	150	v

NOTES:

1/ Epp shall be measured with the transformer unloaded, using a high-impedance voltmeter.

2/ With starter electrode connected to anode through a 10-megohm resistor.

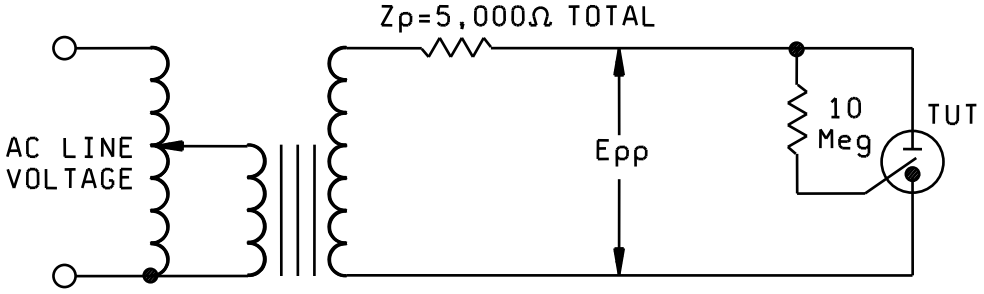

FIGURE 2. Ionization voltage test circuit.

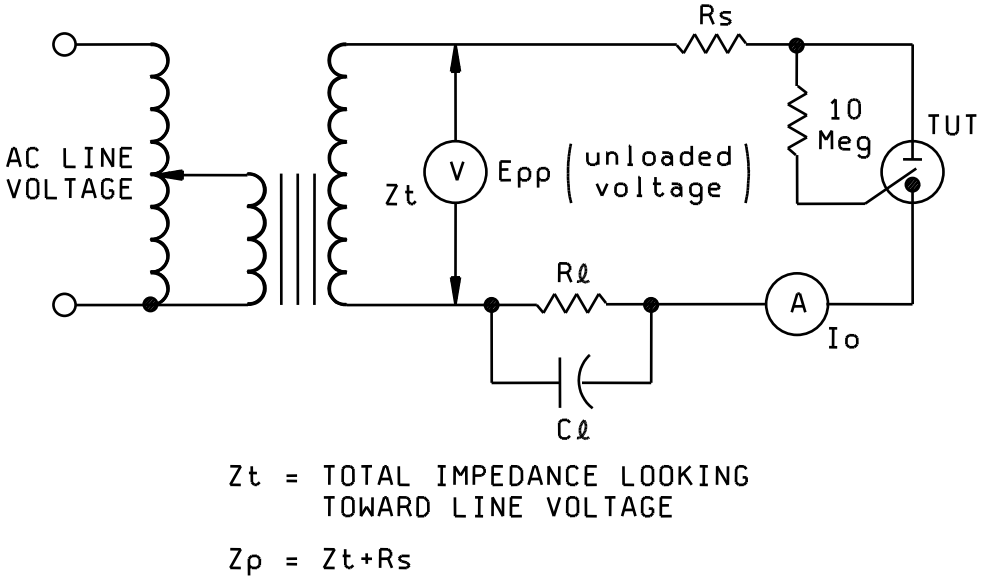

FIGURE 3. Life-test and operation of rectifiers test circuit.

Referenced documents. In addition to MIL-PRF-1, this document references MIL-STD-1311.

The margins of this specification are marked with vertical lines to indicate where changes from the previous issue were made. This was done as a convenience only and the Government assumes no liability whatsoever for any inaccuracies in these notations. Bidders and contractors are cautioned to evaluate the requirements of this document based on the entire content irrespective of the marginal notations and relationship to the last previous issue.

Custodians:
Army – CR
Navy - EC
Air Force - 85
DLA - CC

Review activities:
Army - AR, MI
Navy - AS, CG, MC, OS, SH
Air Force - 99

Preparing activity:
DLA - CC

(Project 5960-2014-005)

NOTE: The activities listed above were interested in this document as of the date of this document. Since organizations and responsibilities can change, you should verify the currency of the information above using the ASSIST Online database at https://assist.dla.mil/.