INCH-POUND
MIL-PRF-1/609G
30 September 2009
SUPERSEDING
MIL-PRF-1/609F
31 March 1999

PERFORMANCE SPECIFICATION SHEET
ELECTRON TUBE, GAS SWITCHING
TYPE 1B24A

This specification is approved for use by all Departments and Agencies of the Department of Defense.

The requirements for acquiring the electron tube described herein shall consist of this document and the latest issue of MIL-PRF-1.

DESCRIPTION: TR, tunable, internal cavity, incident power 30 kw, frequency range 8,490 to 9,600 MHz.

ABSOLUTE RATINGS:

Parameter:	Incident power	Ii	Ebb	Alt
Unit:	kw	μA dc	V dc	ft
Maximum:	30	200	-1,000	10,000
Minimum:	- - -	100	-750	- - -

PHYSICAL CHARACTERISTICS:

Dimensions: See figure 1.

TEST CONDITIONS:

Parameter:	Incident power	Ii	tp	prr	Ebb	Ri
Unit:	kw	μA dc	μs	pps	V dc	MegΩ
Test condition 1:	10	100	0.5	1,000	- - -	- - -
Test condition 2:	30	- - -	1.0	1,000	-800	2.3

Frequency		
F	MHz	±
F1	8,490	0.1%
F2	8,600	0.1%
F3	9,000	0.1%
F4	9,375	0.1%
F5	9,375	0.2%
F6	9,375	0.5%
F7	9,500	0.1%
F8	9,600	0.1%

GENERAL:

Qualification - Required.

TABLE I. Testing and inspection.

Requirement or test	Method MIL-STD-1311	Notes	Test	Conditions	Symbol	Limits Min	Limits Max	Units
Qualification								
Insertion loss (integral cavity)	4416	2	- - -	F = F2 to F7	Li	- - -	2.0	dB
Loaded Q	4461	2	- - -	F = F2 to F7	QL	160	350	- - -
Temperature coefficient of frequency	4466	3	- - -	F = F4	F	- - -	-20	MHz
Conformance inspection, part 1		1	- - -					
Ignitor ignition time	4401	- - -	- - -	Ebb = -800 V dc; Ri = 2.3 MegΩ ±1 percent	t	- - -	5.0	sec
Ignitor voltage drop	4406	- - -	- - -	Ii = 100 μA dc	Eid	325	450	V dc
Insertion loss (integral cavity)	4416	- - -	- - -	F = F1	Li	- - -	2.0	dB
Ignitor interaction (insertion loss)	4421	- - -	- - -	Ii = 100 μA dc	ΔLi	- - -	0.2	dB
Tuning range	4426	- - -	- - -	5 turns	F	8,490	9,600	MHz
Flat leakage power	4452	- - -	1	F = F6; T = 25°C ±5°C	pf	- - -	30	mw
Temperature cycling (nonoperating)	1027	- - -	- - -		- - -	- - -	- - -	- - -
Conformance inspection, part 2								
Dielectric material strain	4101	- - -	- - -		- - -	- - -	- - -	- - -
Degradation due to vibration	4021	- - -	- - -		- - -	- - -	- - -	- - -
Ignitor oscillation	4411	- - -	- - -		Ii	- - -	60	μA dc
Insertion loss (integral cavity)	4416	- - -	- - -	F = F3, F4 and F8	Li	- - -	2.0	dB
Loaded Q	4461	- - -	- - -	F = F1 and F8	QL	160	350	- - -
Recovery time	4471	- - -	1	F = F4	t	- - -	4.0	μs
Vibration detuning	4016	4	- - -	2G; F = F4; t = 12 hours	ΔF	- - -	± 3	MHz

See footnotes at end of table.

TABLE I. Testing and inspection -Continued.

Requirement or test	Method MIL-STD-1311	Notes	Test	Conditions	Symbol	Limits Min	Limits Max	Units
Conformance inspection, part 3								
Life test	- - -	5	2	Group B; F = F5	t	500	- - -	hrs
Life-test end points:	- - -	6	- - -		- - -	- - -	- - -	- - -
Flat leakage power	4452	- - -	1	F = F6; T = 25° ±5° C	pf	- - -	30	mw
Insertion loss (integral cavity)	4416	- - -	- - -	F = F4	Li	- - -	2.0	dB
Ignitor interaction (insertion loss)	4421	- - -	- - -	Ii = 100 μA dc	ΔLi	- - -	0.5	dB
Ignitor voltage drop	4406	- - -	- - -	Ii = 100 μA dc	Eid	- - -	650	V dc
Degradation due to vibration	4021	- - -	- - -		- - -	- - -	- - -	- - -
Recovery time	4471	- - -	1	F = F4	t	- - -	6	μs
Temperature cycling life test	1027	- - -	- - -	Group B	Cycles	10	- - -	- - -

NOTES:

1. This specification sheet uses accept on zero defect sampling plan in accordance with MIL-PRF-1, table III.
2. This test shall be performed at intervals of 100 MHz.
3. The frequency drift shall be measured with no adjustment of the tuning mechanism.
4. The tube shall be tuned to the specified frequency and then vibrated in the direction of ignitor axis. At the conclusion of this test, the tube shall satisfy all electrical tests of this specification.
5. The ignitor current shall not be adjusted during life test.
6. Life-test end points shall be measured by using a fixed voltage and resistor.

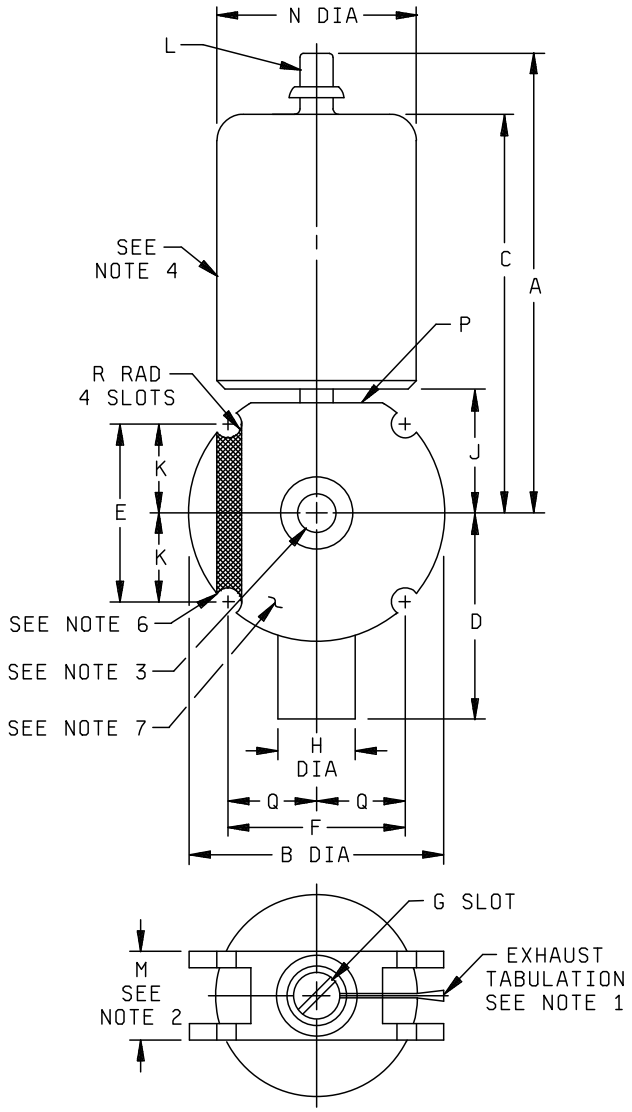

Dimensions				
Ltr	Inches		Millimeter	
	Min	Max	Min	Max
Qualification inspection				
C		2.875		73.03
E	1.275	1.285	32.39	32.64
F	1.215	1.225	30.86	31.12
L	CAP: C1-2 (EIA)			
Conformance inspection, part 1 (see note 1)				
G	.031	.063	0.79	1.60
K	.637	.643	16.18	16.33
M	.609	.615	15.47	15.62
Q	.607	.613	15.42	15.57
R	.086	.094	2.18	2.39
Conformance inspection, part 2				
A		3.250		82.55
B		1.760		44.70
D		1.422		36.12
H	.527	.533	13.39	13.54
J	.938		23.83	
N		1.188		30.18
Reference dimension				
P	.563 Flat		14.30 Flat	

NOTES:

1. Exhaust tubulation shall not extend beyond periphery.
2. Applies to area between periphery of this section of tube and concentric circle of 5/16 radius.
3. No part of iris assembly shall extend beyond body surface.
4. Reservoir shall be glass, or approved equivalent.
5. Maximum projection of reservoir shall lie within a cylinder of 1.250 diameter with axis colinear with tube axis.
6. A force of 200 pounds shall be applied to the face of the tube within the area indicated by shading. Dimension M shall not be permanently changed by more than 0.001. Qualification inspection required.
7. Body faces shall be cadmium plated 0.0003 minimum, or shall be made entirely of monel, bright nickel or equivalent. If nickel Is required, it is recommended that it be used only when other metals can not meet the performance requirements.
8. Solder fillets permissible on peripheral surface near exhaust tubulation and electrode terminal. Slots shall be free from solder.

FIGURE 1. Outline drawing of electron type 1B24A.

Referenced documents. In addition to MIL-PRF-1, this document references the following:
MIL-STD-1311

The margins of this specification are marked with vertical lines to indicate where changes from the previous issue were made. This was done as a convenience only and the Government assumes no liability whatsoever for any inaccuracies in these notations. Bidders and contractors are cautioned to evaluate the requirements of this document based on the entire content irrespective of the marginal notations and relationship to the last previous issue.

Custodians:
Army - CR
Navy - EC
Air Force - 85
DLA - CC

Review activities:
Army - MI
Navy - AS, CG, MC, OS
Air Force - 19, 99

Preparing activity:
DLA - CC

(Project 5960-2009-036)

NOTE: The activities listed above were interested in this document as of the date of this document. Since organizations and responsibilities can change, you should verify the currency of the information above using the ASSIST Online database at http://assist.daps.dla.mil/.