INCH POUND

MIL-M-38510/79D
17 AUGUST 2005
SUPERSEDING
MIL-M-38510/79C
5 NOVEMBER 1987

MILITARY SPECIFICATION

MICROCIRCUITS, DIGITAL, BIPOLAR, SCHOTTKY TTL, DATA SELECTORS / MULTIPLEXERS WITH THREE-STATE OUTPUTS, MONOLITHIC SILICON

Inactive for new design after 23 August 1996.

This specification is approved for use by all Departments and Agencies of the Department of Defense.

The requirements for acquiring the product herein shall consist of this specification sheet and MIL-PRF 38535.

1. SCOPE

1.1 Scope. This specification covers the detail requirements for monolithic silicon, Schottky TTL, data selectors / multiplexers (three-state) microcircuits. Two product assurance classes and a choice of case outlines and lead finishes are provided and are reflected in the complete part number. For this product, the requirements of MIL-M-38510 have been superseded by MIL-PRF-38535, (see 6.4).

1.2 Part or Identifying Number (PIN). The PIN is in accordance with MIL-PRF-38535, and as specified herein.

1.2.1 Device type. The device type is as follows:

Device type	Circuit
01	8 input, data selector / multiplexer
02	Dual, 4-input, data selector / mutiplexer
03	Quad, 2-input, data selector / multiplexer
04	Quad, 2-input, data selector / multiplexer with inverted output
05	8-input, data selector / mutiplexer with 3-state outputs
06	Quad, 2-input, data selector / multiplexer with 3-state outputs
07	Quad, 2-input, data selector / multiplexer with 3-state inverted output
08	Dual, 4-input, data selector / multiplexer with 3-state outputs

1.2.2 Device class. The device class is the product assurance level as defined in MIL-PRF-38535.

1.2.3 Case outlines. The case outlines are as designated in MIL-STD-1835 and as follows:

Outline letter	Descriptive designator	Terminals	Package style
E	GDIP1-T16, CDIP2-T16	16	Dual in line package
F	GDFP2-F16, CDFP3-F16	16	Flat Package
2	CQCC1-N20	20	Square chip
X	CQCC2-N20	20	Square chip carrier package

Comments, suggestions, or questions on this document should be addressed to: Commander, Defense Supply Center Columbus, ATTN: DSCC-VAS, P. O. Box 3990, Columbus, OH 43218-3990, or emailed to bipolar@dscc.dla.mil. Since contact information can change, you may want to verify the currency of this address information using the ASSIST Online database at http://assist.daps.dla.mil.

AMSC N/A FSC 5962

1.3 Absolute maximum ratings.

Supply voltage range ..... -0.5 V dc to +7.0 V dc
Input voltage range ..... -1.2 V dc at -18 mA to +5.5 V dc
Storage temperature range ..... -65°C to +150°C
Maximum power dissipation (P_D) 1/ :
Device types 01 and 02 ..... 385 mW
Device type 03 ..... 430 mW
Device type 04 ..... 336 mW
Device type 05 ..... 468 mW
Device type 06 ..... 545 mW
Device type 07 ..... 479 mW
Device type 08 ..... 550 mW
Lead temperature (soldering 10 seconds) ..... 300°C
Thermal resistance, junction-to-case (θ_{JC}) :
Cases E, F, 2, and X ..... (See MIL-STD-1835)
Junction temperature (T_J) 2/ ..... +175°C

1.4 Recommended operating conditions.

Supply voltage (V_{CC}) ..... 4.5 V dc minimum to 5.5 V dc maximum
Minimum high level input voltage (V_{IH}) ..... 2.0 V dc
Maximum low level input voltage (V_{IL}) ..... 0.8 V dc 3/
Case operating temperature range (T_C) ..... -55°C to 125°C

2.0 APPLICABLE DOCUMENTS

2.1 General. The documents listed in this section are specified in sections 3, 4, or 5 of this specification. This section does not include documents cited in other sections of this specification or recommended for additional information or as examples. While every effort has been made to ensure the completeness of this list, document users are cautioned that they must meet all specified requirements of documents cited in sections 3, 4, or 5 of this specification, whether or not they are listed.

2.2 Government documents.

2.2.1 Specifications and standards. The following specifications and standards form a part of this specification to the extent specified herein. Unless otherwise specified, the issues of these documents are those cited in the solicitation or contract.

DEPARTMENT OF DEFENSE SPECIFICATIONS

MIL-PRF-38535 - Integrated Circuits (Microcircuits) Manufacturing, General Specification for.

DEPARTMENT OF DEFENSE STANDARDS

MIL-STD-883 - Test Method Standard for Microelectronics.
MIL-STD-1835 - Interface Standard Electronic Component Case Outlines

(Copies of these documents are available online at http://assist.daps.dla.mil/quicksearch/ or http://assist.daps.dla.mil or from the Standardization Document Order Desk, 700 Robbins Avenue, Building 4D, Philadelphia, PA 19111-5094.)

2.3 Order of precedence. In the event of a conflict between the text of this specification and the references cited herein, the text of this document takes precedence. Nothing in this document, however, supersedes applicable laws and regulations unless a specific exemption has been obtained.

1/ Must withstand the added P_D due to short circuit condition (e.g., I_{OS}) test.
2/ Maximum junction temperature should not be exceeded except in accordance with allowable short duration burn-in screening conditions in accordance with MIL-PRF-38535.
3/ V_{IL} = 0.7 V at +125 °C

3. REQUIREMENTS

3.1 Qualification. Microcircuits furnished under this specification shall be products that are manufactured by a manufacturer authorized by the qualifying activity for listing on the applicable qualified manufacturers list before contract award (see 4.3 and 6.3).

3.2 Item requirements. The individual item requirements shall be in accordance with MIL-PRF-38535 and as specified herein or as modified in the device manufacturer's Quality Management (QM) plan. The modification in the QM plan shall not affect the form, fit, or function as described herein.

3.3 Design, construction, and physical dimensions. The design, construction, and physical dimensions shall be as specified in MIL-PRF-38535 and herein.

3.3.1 Terminal connections. The terminal connections shall be as specified on figure 1.

3.3.2 Truth table. The truth table shall be as specified on figure 2.

3.3.3 Schematic circuits. The schematic circuit shall be maintained by the manufacturer and made available to the qualifying activity and the preparing activity upon request.

3.3.4 Case outlines. The case outlines shall be as specified in 1.2.3.

3.4 Lead material and finish. The lead material and finish shall be in accordance with MIL-PRF-38535 (see 6.6).

3.5 Electrical performance characteristics. Unless otherwise specified, the electrical performance characteristics are as specified in table I, and apply over the full recommended case operating temperature range.

3.6 Electrical test requirements. The electrical test requirements for each device class shall be the subgroups specified in Table II. The electrical tests for each subgroup are described in Table III.

3.7 Marking. Marking shall be in accordance with MIL-PRF-38535 and 1.2 herein.

3.8 Microcircuit group assignment. The devices covered by this specification shall be in microcircuit group number 11 (see MIL-PRF-38535, appendix A).

TABLE I. Electrical performance characteristics.

Test	Symbol	Conditions $-55°C \le T_C \le +125°C$ Unless otherwise specified		Device type	Limits Min	Limits Max	Units
High level output voltage	V_{OH}	V_{CC} = 4.5 V; V_{IL} = 0.8 V I_{OH} = -1.0 mA @T_C = 125°C, V_{IL} = 0.7 V		01, 02 03, 04	2.5		V
		V_{CC} = 4.5 V; V_{IL} = 0.8 V I_{OH} = -2.0 mA @T_C = 125°C, V_{IL} = 0.7 V		05, 06	2.4		
		V_{CC} = 4.5 V; V_{IL} = 0.8 V I_{OH} = -1.0 mA @T_C = 125°C, V_{IL} = 0.7 V		07, 08			
Low level output voltage	V_{OL}	V_{CC} = 4.5 V I_{OL} = 20 mA		ALL		.5	V
		T_C = 125°C		ALL		.45	V
Input clamp voltage	V_{IC}	V_{CC} = 4.5 V I_{IN} = -18 mA, T_C = 25°C		ALL		-1.2	V
Off state output current	I_{OFF1}	V_{CC} = 5.5 V V_O = 2.7 V		05, 06 07, 08		50	µA
Off state output current	I_{OFF2}	V_{CC} = 5.5 V V_O = 0.5 V		05, 06 07, 08		-50	µA
High level input current	I_{IH1}	V_{CC} = 5.5 V V_{IN} = 2.7 V	All inputs	01, 02 05, 08		50	µA
			A and B inputs	03, 04			
			All inputs except S	06, 07			
			S and G inputs	03, 04		100	
			S input	06, 07			
High level input current	I_{IH2}	V_{CC} = 5.5 V V_{IN} = 5.5 V	All inputs	All		1.0	mA
Low level input current	I_{IL}	V_{CC} = 5.5 V V_{IN} = 0.5 V	All inputs	01, 02 05, 08	-1.0	-2.0	mA
			A and B inputs	03, 04	0.1		
			All inputs except S	06, 07	-1.0 2/		
			S and G inputs	03, 04	0.1	-4.0	
			S input	06, 07	-2.0 2/	-4.0	

See footnotes at end of table.

TABLE I. Electrical performance characteristics - Continued.

Test	Symbol	Conditions $-55°C \le T_C \le +125°C$ Unless otherwise specified	Device type	Limits Min	Limits Max	Units
Short circuit output current	I_{OS}	V_{CC} = 5.5 V 1/`	All	-40	-110	mA
Supply current	I_{CC}	V_{CC} = 5.5 V	01, 02		70	mA
			03		78	
			04		61	
Supply current	I_{CCO}	V_{CC} = 5.5 V V_{IN} = 5.5 V	05		85	mA
			06		99	
			07		87	
			08		100	
Supply current	I_{CC1}	V_{CC} = 5.5 V	08		80	mA
Collector cut-off current	I_{CEX}	V_{CC} = 5.5 V, V_{OH} = 5.5 V V_{IL} = GND, V_{IH} = 5.5 V	01 thru 08		250	µA
Low level supply current	I_{CCL}	V_{CC} = 5.5 V	06		93	mA
			07		81	
High level supply current	I_{CCH}	V_{CC} = 5.5 V	06		68	mA
			07		56	
From A, B, C, to Y	t_{PLH2}	V_{CC} = 5.0 V C_L = 50 pF R_L = 280Ω	01	2.0	26.0	ns
From A, B, C, to Y	t_{PHL2}		01	2.0	26.0	ns
From A, B, C, to W	t_{PLH1}		01	2.0	22.0	ns
From A, B, C, to W	t_{PHL1}		01	2.0	20.0	ns
From any D to Y	t_{PLH6}		01	2.0	18.0	ns
From any D to Y	t_{PHL6}		01	2.0	18.0	ns
From any D to W	t_{PLH5}		01	2.0	11.5	ns

See footnotes at end of table.

TABLE I. Electrical performance characteristics - Continued.

Test	Symbol	Conditions $-55°C \le T_C \le +125°C$ Unless otherwise specified	Device type	Limits Min	Limits Max	Units
From any D to W	t_{PHL5}	V_{CC} = 5.0 V C_L = 50 pF R_L = 280 Ω	01	2.0	11.5	ns
From strobe to Y	t_{PLH4}		01	2.0	24.0	ns
From strobe to Y	t_{PHL4}		01	2.0	26.0	ns
From strobe to W	t_{PLH3}		01	2.0	19.5	ns
From strobe to W	t_{PHL3}		01	2.0	18.0	ns
From data to Y	t_{PLH1}		02, 08	2.0	14.5	ns
From data to Y	t_{PHL1}		02, 08	2.0	14.5	ns
From select to Y	t_{PLH2}		02, 08	2.0	26.0	ns
From select to Y	t_{PHL2}		02, 08	2.0	26.0	ns
From strobe to Y	t_{PLH3}		02	2.0	22.0	ns
From strobe to Y	t_{PHL3}		02	2.0	21.0	ns
From data to Y	t_{PLH2}		03	2.0	12.0	ns
			04		11.0	
From data to Y	t_{PHL2}		03	2.0	12.0	ns
			04		11.0	
From strobe to Y	t_{PLH3}		03	2.0	18.0	ns
			04		18.0	
From strobe to Y	t_{PHL3}		03	2.0	18.5	ns
			04		18.5	

See footnotes at end of table.

TABLE I. Electrical performance characteristics - Continued.

Test	Symbol	Conditions $-55°C \le T_C \le +125°C$ Unless otherwise specified	Device type	Limits Min	Limits Max	Units
From select to Y	t_{PLH1}	V_{CC} = 5.0 V C_L = 50 pF R_L = 280 Ω	03	2.0	18.5	ns
			04		18.5	
From select to Y	t_{PHL1}		03	2.0	18.5	ns
			04		18.5	
From A, B, C to Y	t_{PLH2}		05	2.0	26.0	ns
From A, B, C to Y	t_{PHL2}		05	2.0	28.0	ns
From A, B, C to W	t_{PLH1}		05	2.0	22.0	ns
From A, B, C to W	t_{PHL1}		05	2.0	20.0	ns
From any D to Y	t_{PLH4}		05	2.0	18.0	ns
From any D to Y	t_{PHL4}		05	2.0	18.0	ns
From any D to W	t_{PLH3}		05	2.0	11.5	ns
From any D to W	t_{PHL3}		05	2.0	11.5	ns
From strobe to Y	t_{ZH3}		05	2.0	25.5	ns
From strobe to Y	t_{ZL3}		05	2.0	27.5	ns
From strobe to Y	t_{HZ4}		05	2.0	24.0	ns
From strobe to Y	t_{LZ4}		05	2.0	22.0	ns
From strobe to W	t_{ZH1}		05	2.0	25.5	ns
From strobe to W	t_{ZL1}		05	2.0	27.5	ns
From strobe to W	t_{HZ2}		05	2.0	24.0	ns

See footnotes at end of table.

TABLE I. Electrical performance characteristics - Continued.

Test	Symbol	Conditions $-55°C \le T_C \le +125°C$ Unless otherwise specified	Device type	Limits Min	Limits Max	Units
From strobe to W	t_{LZ2}	V_{CC} = 5.0 V C_L = 50 pF R_L = 280 Ω	05	2.0	22.0	ns
From select to Y	t_{PLH1}		06	2.0	22.0	ns
			07		18.5	
From select to Y	t_{PHL1}		06	2.0	22.0	ns
			07		18.5	
From data to Y	t_{PLH2}		06	2.0	12.0	ns
			07		10.0	
From data to Y	t_{PHL2}		06	2.0	11.0	ns
			07		10.0	
From output control to Y	t_{ZH}		05, 06	2.0	28.0	ns
			07		28.0	
			08		30.0	
From output control to Y	t_{ZL}		05, 06	2.0	30.0	ns
			07		30.0	
			08		31.0	
From output control to Y	t_{HZ}		05, 06	2.0	24.0	ns
			07		24.0	
			08		18.0	
From output control to Y	t_{LZ}		05, 06	2.0	22.0	ns
			07		22.0	
			08		20.0	

1/ Not more than one output should be shorted at one time.
2/ For device type 06, I_{IL} minimum limit shall be -0.005 mA for circuit B.

TABLE II. Electrical test requirements.

MIL-PRF-38535 Test requirements	Subgroups (see table III)	
	Class S Devices	Class B Devices
Interim electrical parameters	1	1
Final electrical test parameters	1*, 2, 3, 7, 9, 10, 11	1*, 2, 3, 7,9
Group A test requirements	1, 2, 3, 7, 8, 9, 10, 11	1, 2, 3, 7, 8, 9, 10, 11
Group B electrical test parameters when using the method 5005 QCI option	1, 2, 3, 7, 8, 9, 10, 11	N/A
Group C end-point electrical Parameters	1, 2, 3, 7, 8, 9, 10, 11	1, 2, 3
Group D end point electrical Parameters	1, 2, 3	1, 2, 3

*PDA applies to subgroup 1

4. VERIFICATION

4.1 Sampling and inspection. Sampling and inspection procedures shall be in accordance with MIL-PRF-38535 or as modified in the device manufacturer's Quality Management (QM) plan. The modification in the QM plan shall not effect the form, fit, or function as described herein.

4.2 Qualification inspection. Qualification inspection shall be in accordance with MIL-PRF-38535.

4.3 Screening. Screening shall be in accordance with MIL-PRF-38535, and shall be conducted on all devices prior to qualification and conformance inspection. The following additional criteria shall apply:

a. The burn-in test duration, test condition, and test temperature, or approved alternatives shall be as specified in the device manufacturer's QM plan in accordance with MIL-PRF-38535. The burn-in test circuit shall be maintained under document control by the device manufacturer's Technology Review Board (TRB) in accordance with MIL-PRF-38535 and shall be made available to the acquiring or preparing activity upon request. The test circuit shall specify the inputs, outputs, biases, and power dissipation, as applicable, in accordance with the intent specified in test method 1015 of MIL-STD-883.

b. Interim and final electrical test parameters shall be as specified in table II, except interim electrical parameters test prior to burn-in is optional at the discretion of the manufacturer.

c. Additional screening for space level product shall be as specified in MIL-PRF-38535.

4.4 Technology Conformance Inspection (TCI). Technology conformance inspection shall be in accordance with MIL-PRF-38535 and herein for groups A, B, C, and D inspections (see 4.4.1 through 4.4.4).

4.4.1 Group A inspection. Group A inspection shall be in accordance with table III of MIL-PRF-38535 and as follows:

a. Tests shall be as specified in table II herein.
b. Subgroups 4, 5, and 6 shall be omitted.

4.4.2 Group B inspection. Group B inspection shall be in accordance with table II of MIL-PRF-38535.

4.4.3 Group C inspection. Group C inspection shall be in accordance with table IV of MIL-PRF-38535 and as follows:

a. End-point electrical parameters shall be as specified in table II herein.

b. The steady-state life test duration, test condition, and test temperature, or approved alternatives shall be as specified in the device manufacturer's QM plan in accordance with MIL-PRF-38535. The burn-in test circuit shall be maintained under document control by the device manufacturer's Technology Review Board (TRB) in accordance with MIL-PRF-38535 and shall be made available to the acquiring or preparing activity upon request. The test circuit shall specify the inputs, outputs, biases, and power dissipation, as applicable, in accordance with the intent specified in test method 1005 of MIL-STD-883.

4.4.4 Group D inspection. Group D inspection shall be in accordance with table V of MIL-PRF-38535. End-point electrical parameters shall be as specified in table II herein.

4.5 Methods of inspection. Methods of inspection shall be as specified in the appropriate tables and as follows:

4.5.1 Voltage and current. All voltages given are referenced to the microcircuit ground terminal. Currents given are conventional current and positive when flowing into the referenced terminal.

Terminal number case		Terminal name Device type 01		Terminal name Device type 02		Terminal name Device type 03		Terminal name Device type 04		Terminal name Device type 05		Terminal name Device type 06		Terminal name Device type 07		Terminal name Deviec type 08	
2, X	E, F	2, X	E, F	2, X	E, F	2, X	E, F	2, X	E, F	2, X	E, F	2, X	E, F	2, X	E, F	2, X	E, F
1	1	NC	D3	NC	1G	NC	S	NC	S	NC	D3	NC	S	NC	S	NC	1G
2	2	D3	D2	1G	B	S	1A	S	1A	D3	D2	S	1A	S	1A	1G	B
3	3	D2	D1	B	1C3	1A	1B	1A	1B	D2	D1	1A	1B	1A	1B	B	1C3
4	4	D1	D0	1C3	1C2	1B	1Y	1B	1Y	D1	D0	1B	1Y	1B	1Y	1C3	1C2
5	5	D0	Y	1C2	1C1	1Y	2A	1Y	2A	D0	Y	1Y	2A	1Y	2A	1C2	1C1
6	6	NC	W	NC	1C0	NC	2B	NC	2B	NC	W	NC	2B	NC	2B	NC	1C0
7	7	Y	ST	1C1	1Y	2A	2Y	2A	2Y	Y	ST	2A	2Y	2A	2Y	1C1	1Y
8	8	W	GND	1C0	GND	2B	GND	2B	GND	W	GND	2B	GND	2B	GND	1C0	GND
9	9	ST	C	1Y	2Y	2Y	3Y	2Y	3Y	ST	C	2Y	3Y	2Y	3Y	1Y	2Y
10	10	GND	B	GND	2C0	GND	3B	GND	3B	GND	B	GND	3B	GND	3B	GND	2C0
11	11	NC	A	NC	2C1	NC	3A	NC	3A	NC	A	NC	3A	NC	3A	NC	2C1
12	12	C	D7	2Y	2C2	3Y	4Y	3Y	4Y	C	D7	3Y	4Y	3Y	4Y	2Y	2C2
13	13	B	D6	2C0	2C3	3B	4B	3B	4B	B	D6	3B	4B	3B	4B	2C0	2C3
14	14	A	D5	2C1	A	3A	4A	3A	4A	A	D5	3A	4A	3A	4A	2C1	A
15	15	D7	D4	2C2	2G	4Y	G	4Y	G	D7	D4	4Y	0E	4Y	0E	2C2	2G
16	16	NC	V_{CC}	NC	V_{CC}	NC	V_{CC}	NC	V_{CC}	NC	V_{CC}	NC	V_{CC}	NC	V_{CC}	NC	V_{CC}
17		D6		2C3		4B		4B		D6		4B		4B		2C3	
18		D5		A		4A		4A		D5		4A		4A		A	
19		D4		2G		G		G		D4		0E		0E		2G	
20		V_{CC}		V_{CC}		V_{CC}		V_{CC}		V_{CC}		V_{CC}		V_{CC}		V_{CC}	

FIGURE 1. Terminal connections.

Device types 01 and 05

Inputs												Outputs			
Select			Strobe	Data								Type 01		Type 05	
C	B	A	S	D0	D1	D2	D3	D4	D5	D6	D7	Y	W	Y	W
X	X	X	H	X	X	X	X	X	X	X	X	L	H	Z	Z
L	L	L	L	L	X	X	X	X	X	X	X	L	H	L	H
L	L	L	L	H	X	X	X	X	X	X	X	H	L	H	L
L	L	H	L	X	L	X	X	X	X	X	X	L	H	L	H
L	L	H	L	X	H	X	X	X	X	X	X	H	L	H	L
L	H	L	L	X	X	L	X	X	X	X	X	L	H	L	H
L	H	L	L	X	X	H	X	X	X	X	X	H	L	H	L
L	H	H	L	X	X	X	L	X	X	X	X	L	H	L	H
L	H	H	L	X	X	X	H	X	X	X	X	H	L	H	L
H	L	L	L	X	X	X	X	L	X	X	X	L	H	L	H
H	L	L	L	X	X	X	X	H	X	X	X	H	L	H	L
H	L	H	L	X	X	X	X	X	L	X	X	L	H	L	H
H	L	H	L	X	X	X	X	X	H	X	X	H	L	H	L
H	H	L	L	X	X	X	X	X	X	L	X	L	H	L	H
H	H	L	L	X	X	X	X	X	X	H	X	H	L	H	L
H	H	H	L	X	X	X	X	X	X	X	L	L	H	L	H
H	H	H	L	X	X	X	X	X	X	X	H	H	L	H	L

H = high logic level, L = low logic level, X = irrelevant, Z = high impedance

FIGURE 2. Truth tables.

Device type 02

Select Inputs		Data inputs				Strobe	Outputs
B	A	C0	C1	C2	C3	G	Y
X	X	X	X	X	X	H	L
L	L	L	X	X	X	L	L
L	L	H	X	X	X	L	H
L	H	X	L	X	X	L	L
L	H	X	H	X	X	L	H
H	L	X	X	L	X	L	L
H	L	X	X	H	X	L	H
H	H	X	X	X	L	L	L
H	H	X	X	X	H	L	H

Address inputs A and B are common to both sections.
H = high level, L = low level, X = irrelevant

Device types 03 and 04

Inputs				Output Y	
Strobe	Select	A	B	Type 03	Type 04
H	X	X	X	L	H
L	L	L	X	L	H
L	L	H	X	H	L
L	H	X	L	L	H
L	H	X	H	H	L

H = high level, L = low level, X = irrelevant.

FIGURE 2. Truth tables – Continued.

Device types 06 and 07

Inputs				Output Y	
Output Control	Select	A	B	Type 06	Type 07
H	X	X	X	Z	Z
L	L	L	X	L	H
L	L	H	X	H	L
L	H	X	L	L	H
L	H	X	H	H	L

H = high level, L = low level, X = irrelevant,
Z = high impedance (off).

Function table

Device type 08

Select Inputs		Data inputs				Output control	Output
B	A	C0	C1	C2	C3	G	Y
X	X	X	X	X	X	H	Z
L	L	L	X	X	X	L	L
L	L	H	X	X	X	L	H
L	H	X	L	X	X	L	L
L	H	X	H	X	X	L	H
H	L	X	X	L	X	L	L
H	L	X	X	H	X	L	H
H	H	X	X	X	L	L	L
H	H	X	X	X	H	L	H

Address inputs A and B are common to both sections.
H = high level, L = low level, X = irrelevant,
Z = high impedance (off).

FIGURE 2. Truth tables - Continued.

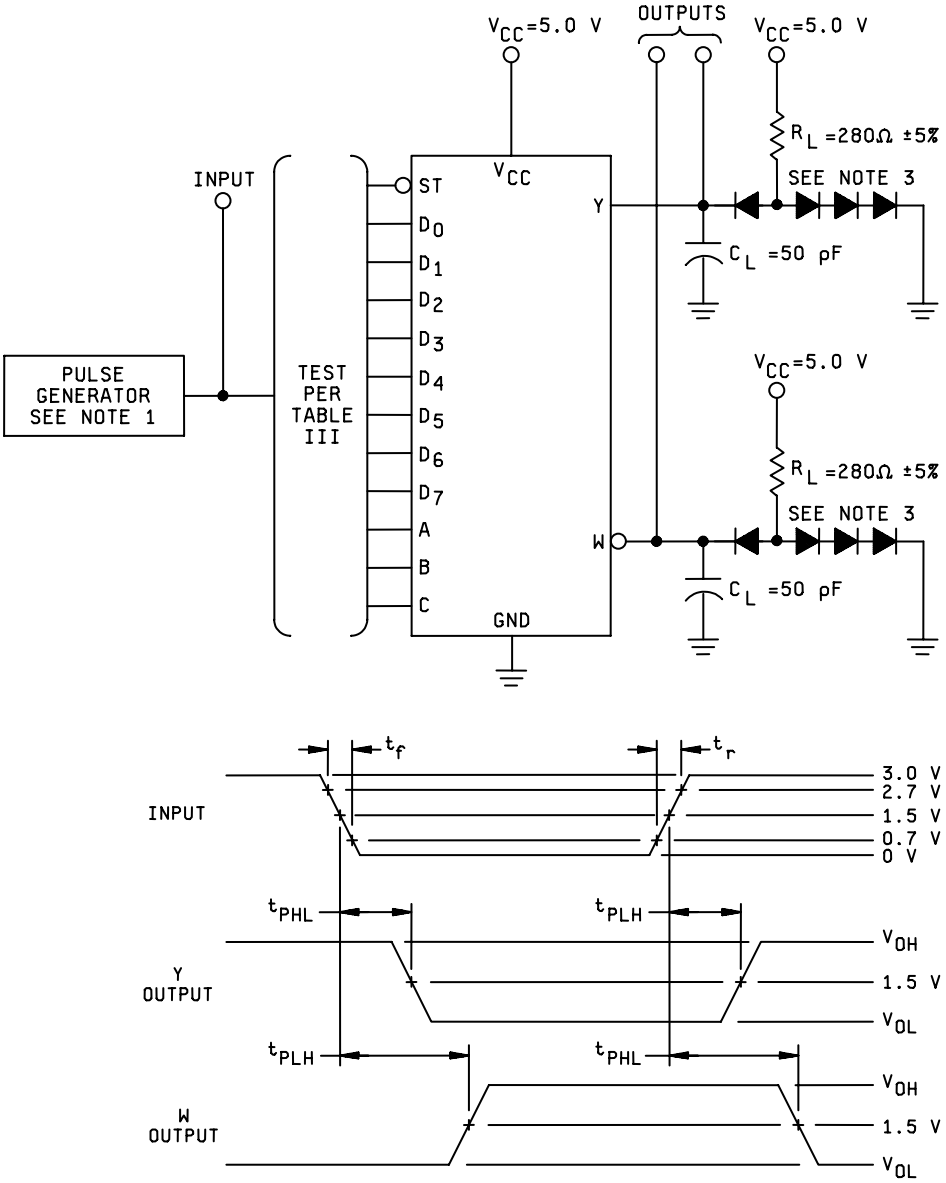

NOTES:

1. The input pulse has the following characteristics: $t_r = t_f \leq 2.5$ ns, PRR $\leq$ 1 MHz, and $Z_{OUT} \approx 50\ \Omega$.
2. C_L includes probe and jig capacitance.
3. All diodes are 1N3064 or equivalent.
4. Only the output under test needs to be loaded.

FIGURE 3. Switching time test circuits and waveforms for device type 01.

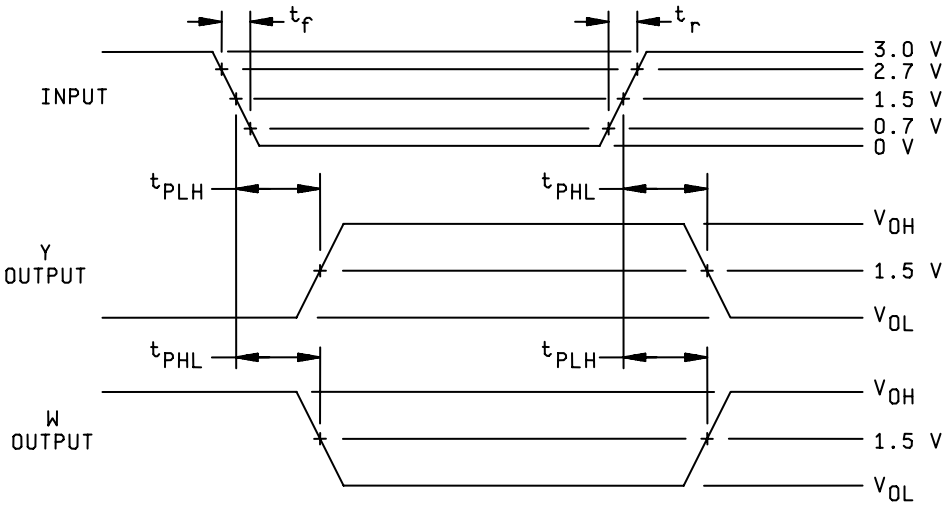

STROBE TO OUTPUT VOLTAGE WAVEFORMS - TYPE 01

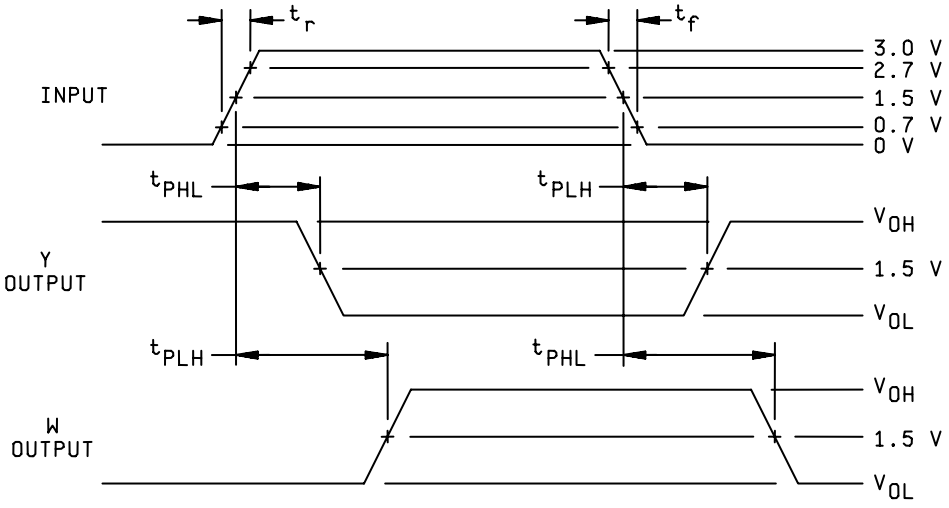

DATA TO OUTPUT VOLTAGE WAVEFORMS - TYPE 01

FIGURE 3. Switching time test circuits and waveforms for device type 01- Continued.

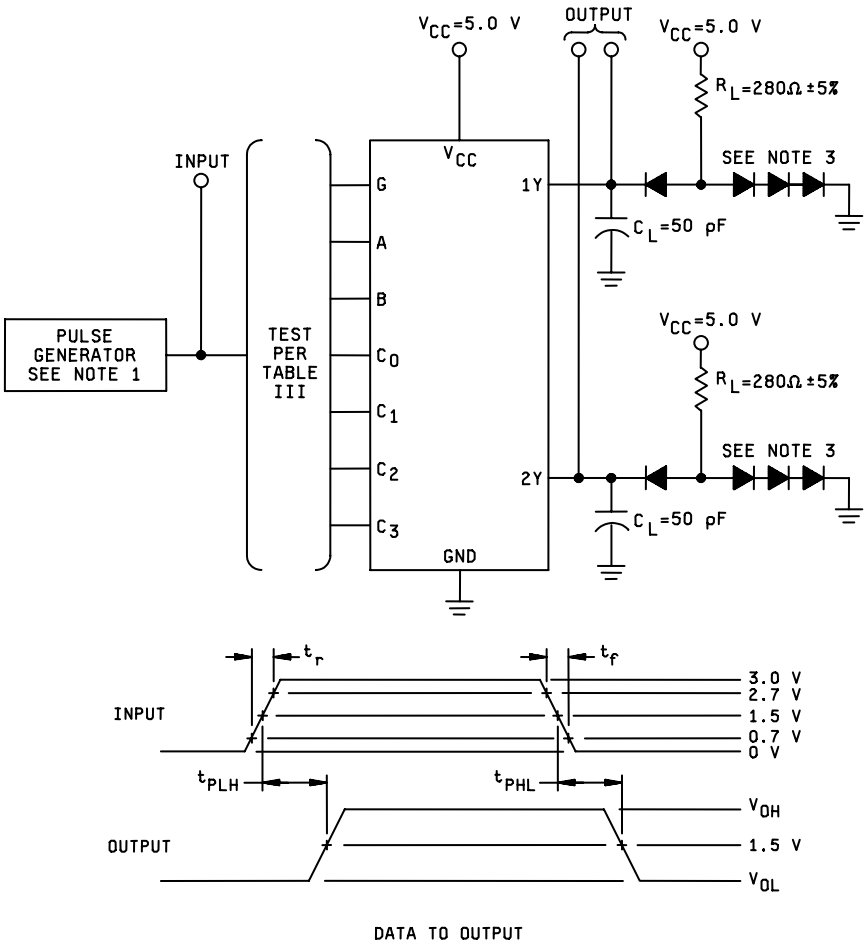

NOTES:

1. The input pulse has the following characteristics: $t_r = t_f \leq 2.5$ ns, PRR $\leq$ 1 MHz, and $Z_{OUT} \approx 50\ \Omega$.
2. C_L includes probe and jig capacitance.
3. All diodes are 1N3064 or equivalent.
4. Only the output under test needs to be loaded.

FIGURE 4. Switching time test circuits and waveforms for device type 02.

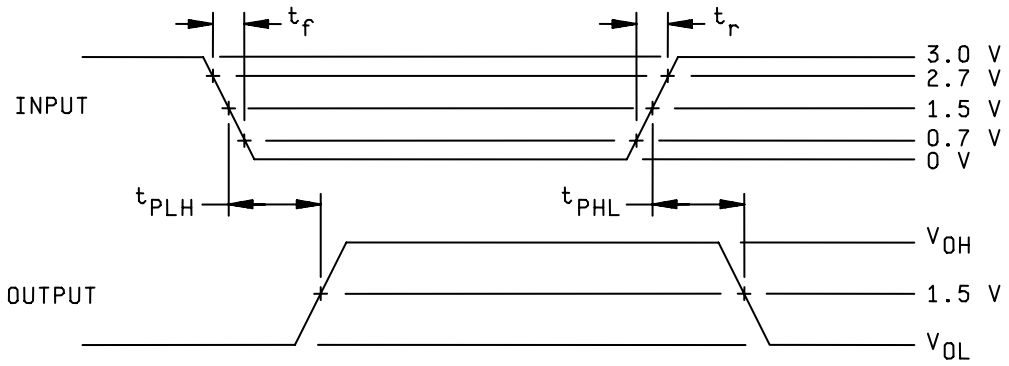

SELECT AND STROBE TO OUTPUT VOLTAGE WAVEFORMS - TYPE 02

FIGURE 4. Switching time test circuits and waveforms for device type 02 – Continued.

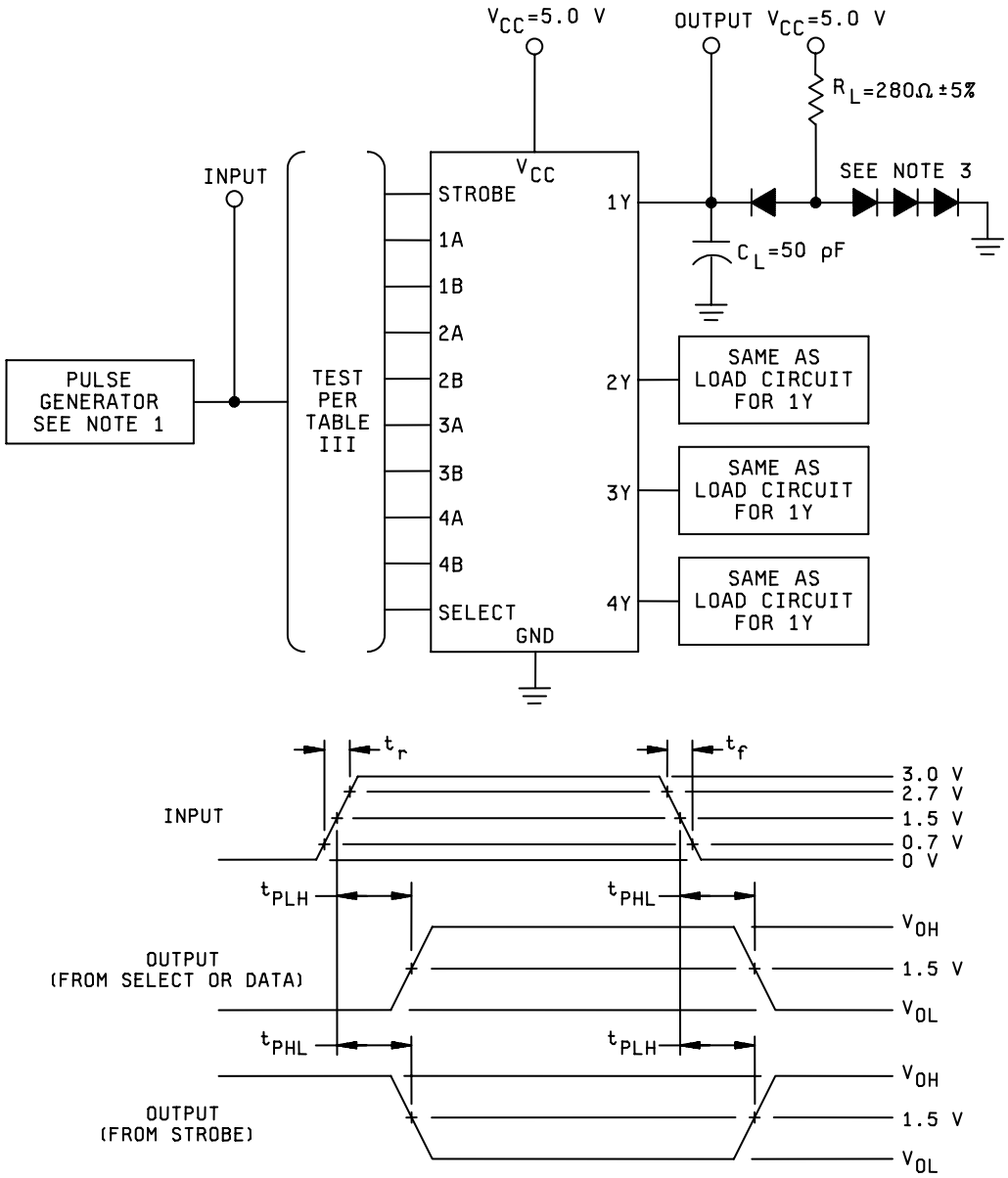

1. The input pulse has the following characteristics: PRR $\leq$ 1 MHz, $t_r = t_f \leq$ 2.5 ns, and $Z_{OUT} \approx$ 50 Ω.
2. C_L includes probe and jig capacitance.
3. All diodes are 1N3064 or equivalent.
4. Load circuit is required on a given output only where table III indicates “OUT” on that output. Load circuits may otherwise be omitted.

FIGURE 5. Switching time test circuits and waveforms for device type 03.

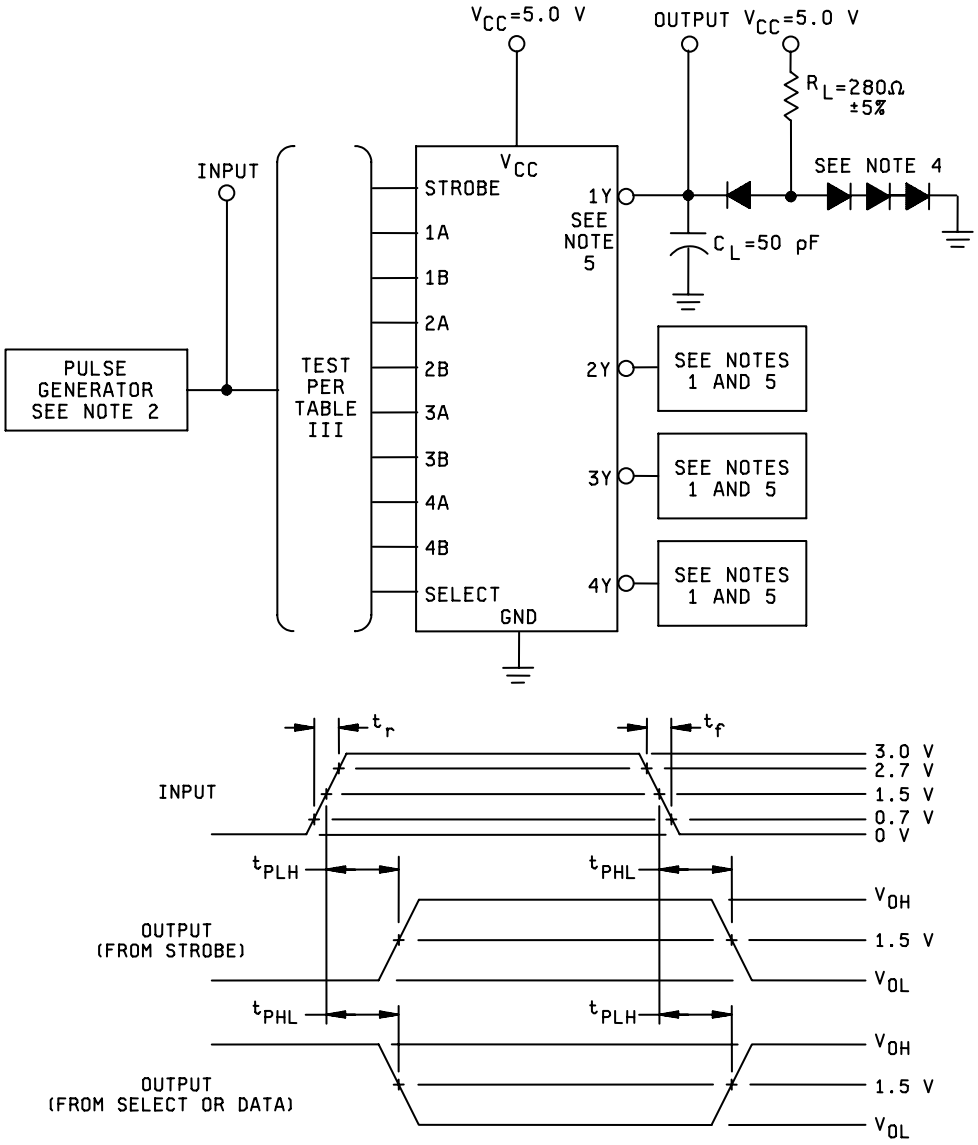

NOTES:

1. Connect same load as shown for output 1Y.
2. The input pulse has the following characteristics: PRR $\leq$ 1 MHz, $t_r = t_f \leq$ 2.5 ns, and $Z_{OUT} \approx$ 50 Ω.
3. C_L includes probe and jig capacitance.
4. All diodes are 1N3064 or equivalent.
5. Load circuit is required on a given output only where table III indicates “OUT” on that output. Load circuits may otherwise be omitted.

FIGURE 6. Switching time test circuits and waveforms for device type 04.

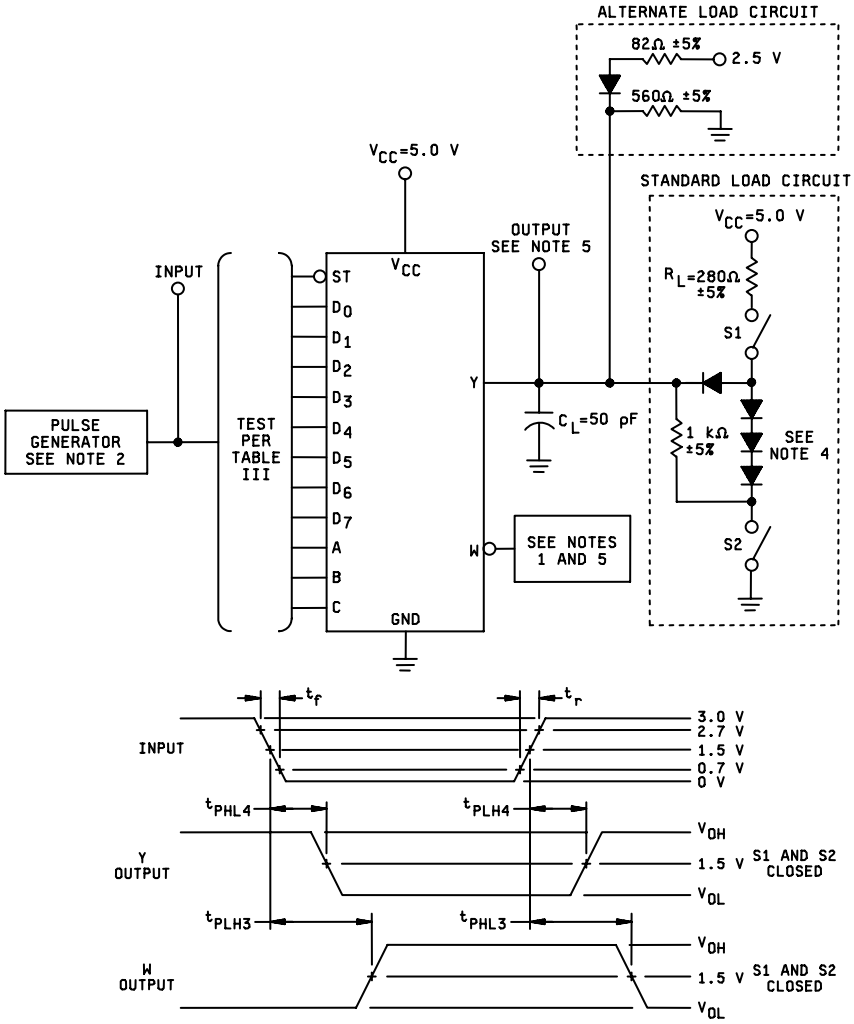

DATA TO OUTPUT WAVEFORMS - TYPE 05

NOTES:

1. Connect same load as shown for Y output.
2. The input pulse has the following characteristics: $t_r = t_f \leq 2.5$ ns, PRR $\leq$ 1 MHz, and $Z_{OUT} \approx 50\ \Omega$.
3. C_L includes probe and jig capacitance.
4. All diodes are 1N3064 or equivalent.
5. Load circuit is required on a given output only where table III indicates “OUT” on that output. Load circuits may otherwise be omitted.

   A. Output 1 is for an output with internal conditions such that the output is low except when disabled by the output control.
   B. Output 2 is for an output with internal conditions such that the output is high except when disabled by the output control.
6. Manufacturer may test with either the standard load circuit or the alternate load circuit at his option.

FIGURE 7. Switching time test circuits and waveforms for device type 05.

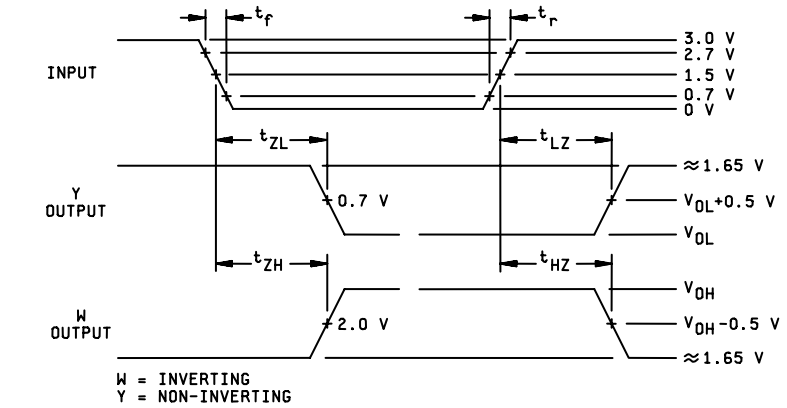

WAVEFORMS FOR ALTERNATE LOADS - TYPE 05

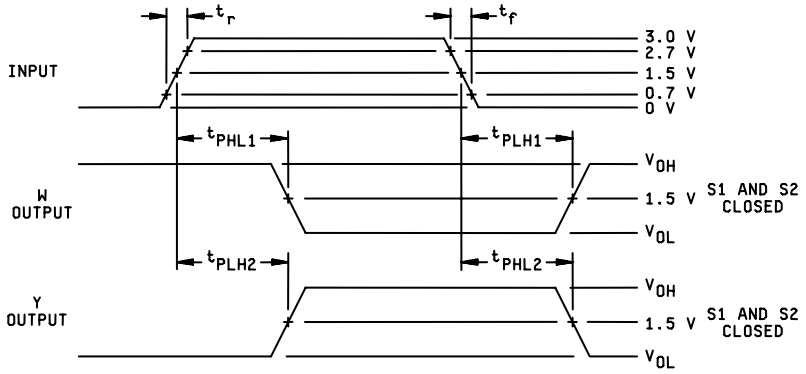

SELECT TO OUTPUT WAVEFORMS - TYPE 05

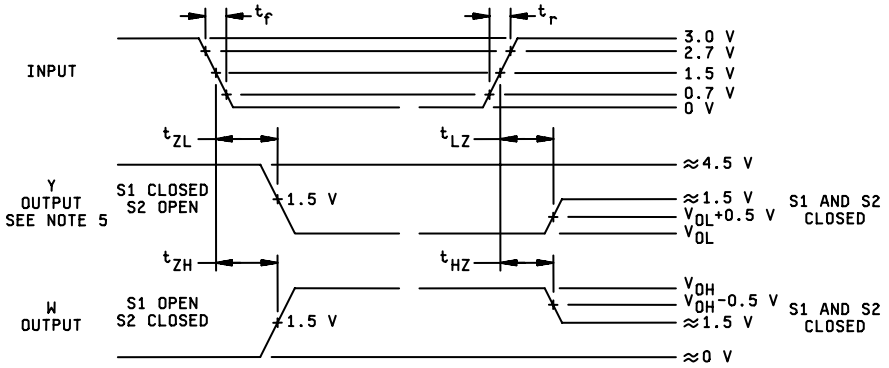

STROBE TO OUTPUT WAVEFORMS - TYPE 05

FIGURE 7. Switching time test circuits and waveforms for device type 05 – Continued.

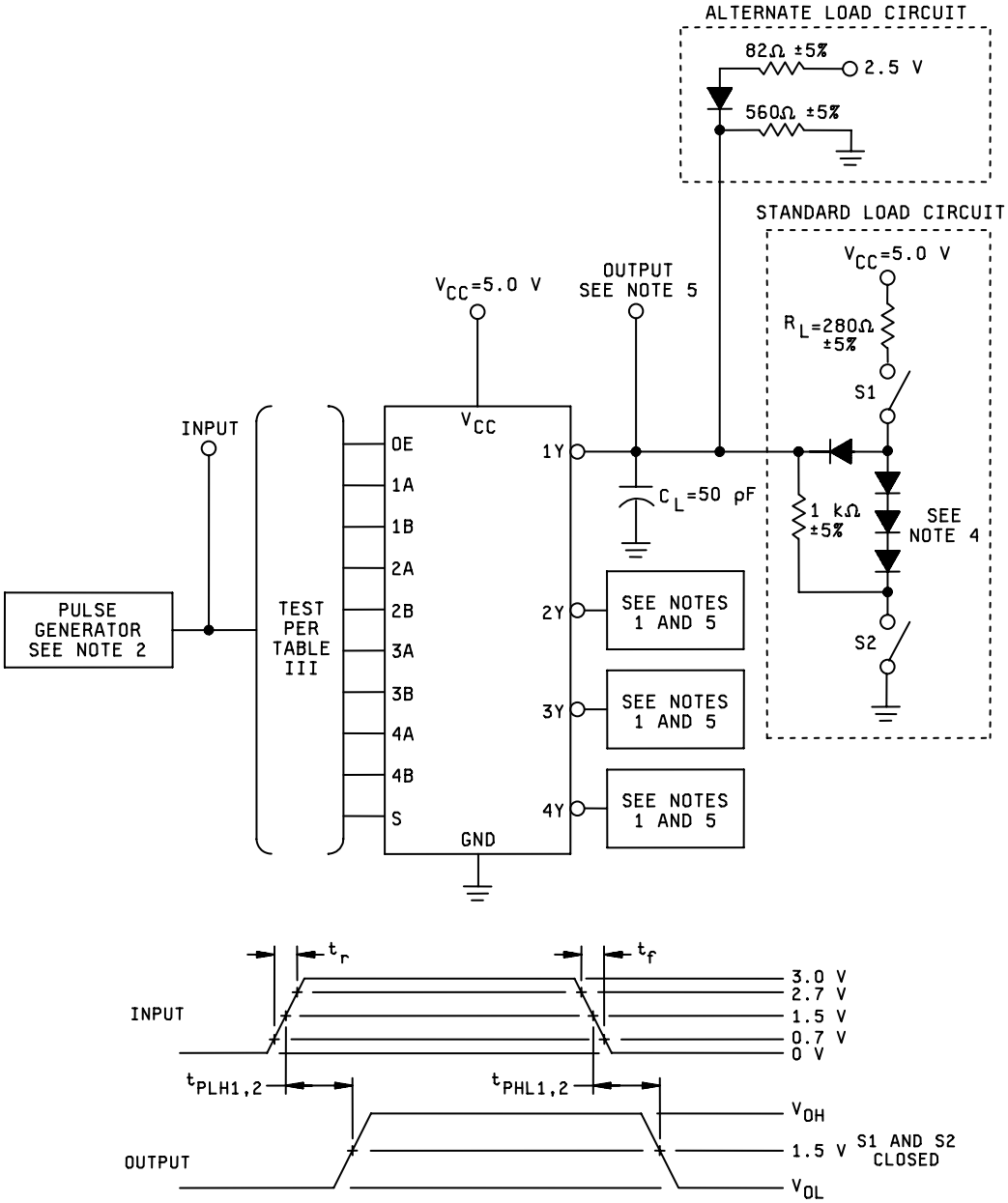

NOTES:

1. Connect same load as shown for 1Y output.
2. The input pulse has the following characteristics: $t_r = t_f \leq 2.5$ ns, PRR $\leq$ 1 MHz, and $Z_{OUT} \approx 50\ \Omega$.
3. C_L includes probe and jig capacitance.
4. All diodes are 1N3064 or equivalent.
5. Load circuit is required on a given output only where table III indicates “OUT” on that output. Load circuits may otherwise be omitted.

   A. Output 1 is for an output with internal conditions such that the output is low except when disabled by the output control.
   B. Output 2 is for an output with internal conditions such that the output is high except when disabled by the output control.
6. Manufacturer may test with either the standard load circuit or the alternate load circuit at his option.

FIGURE 8. Switching time test circuits and waveforms for device type 06.

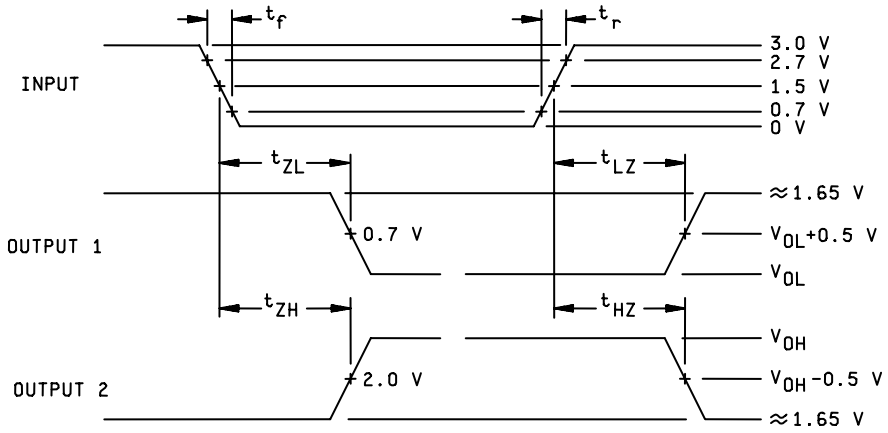

WAVEFORMS FOR ALTERNATE LOAD

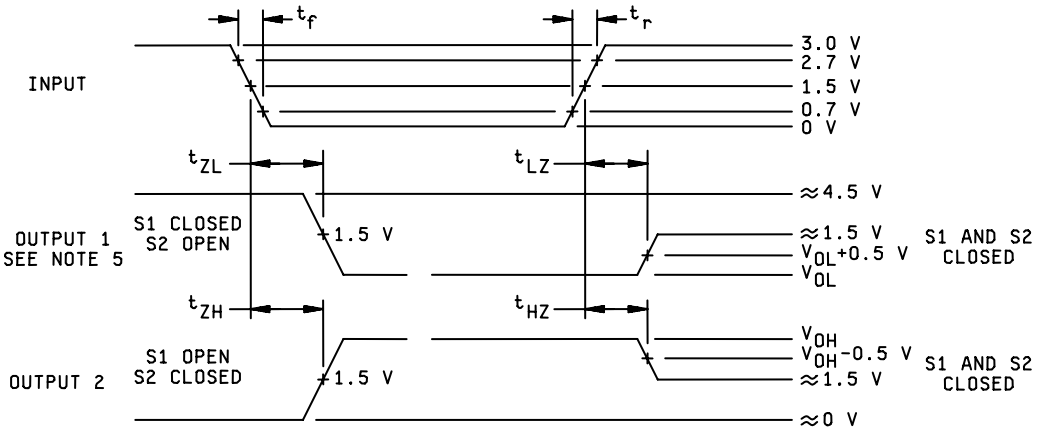

WAVEFORMS FOR STANDARD LOAD

FIGURE 8. Switching time test circuits and waveforms for device type 06 - Continued.

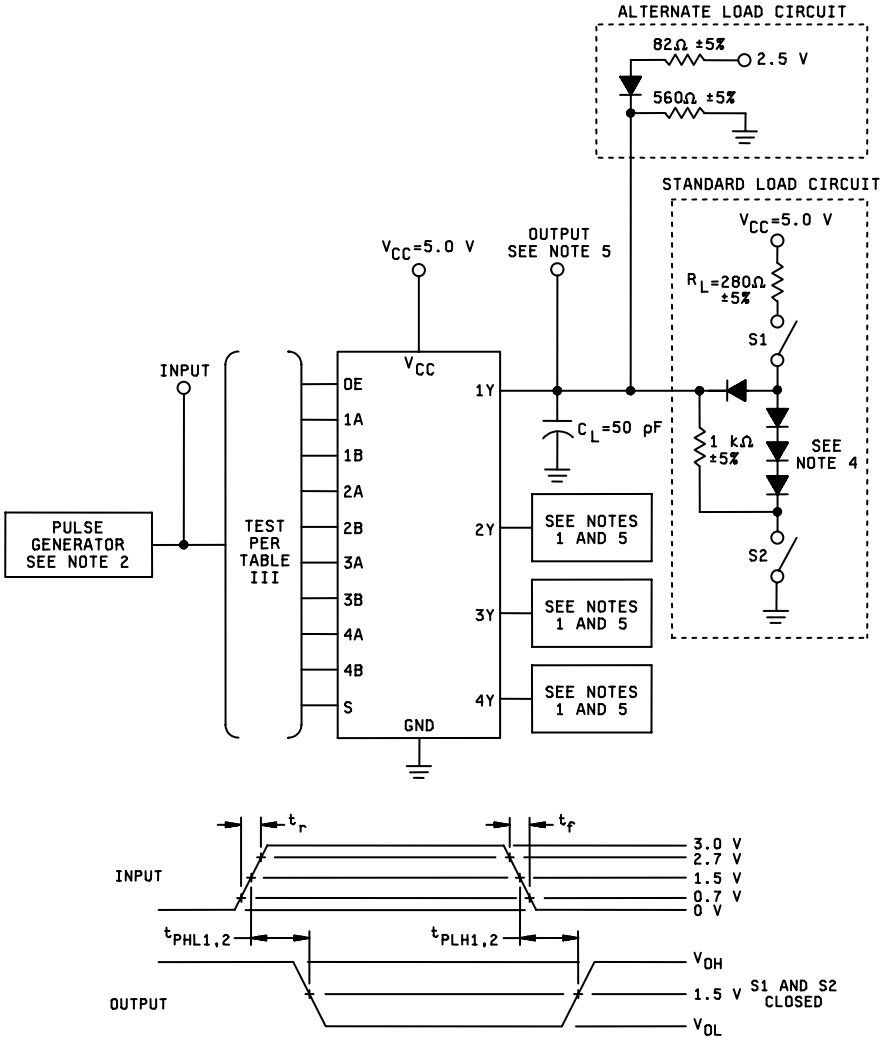

NOTES:

1. Connect same load as shown for 1Y output.
2. The input pulse has the following characteristics: $t_r = t_f \leq 2.5$ ns, PRR $\leq$ 1 MHz, and $Z_{OUT} \approx 50\ \Omega$.
3. C_L includes probe and jig capacitance.
4. All diodes are 1N3064 or equivalent.
5. Load circuit is required on a given output only where table III indicates “OUT” on that output. Load circuits may otherwise be omitted.

   A. Output 1 is for an output with internal conditions such that the output is low except when disabled by the output control.
   B. Output 2 is for an output with internal conditions such that the output is high except when disabled by the output control.
6. Manufacturer may test with either the standard load circuit or the alternate load circuit at his option.

FIGURE 9. Switching time test circuits and waveforms for device type 07.

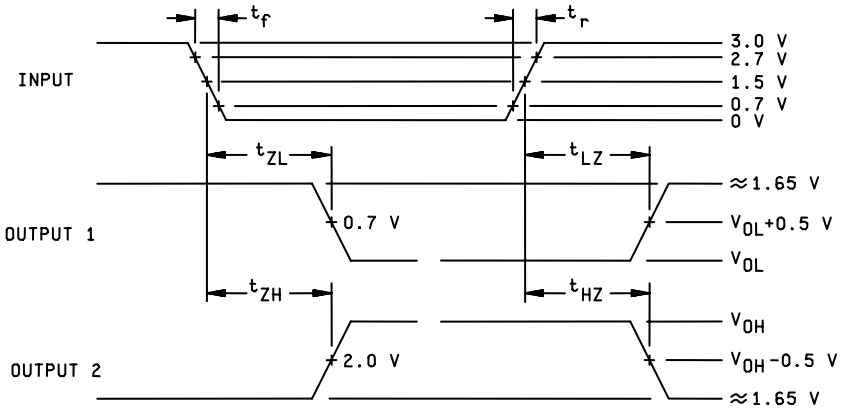

WAVEFORMS FOR ALTERNATE LOAD

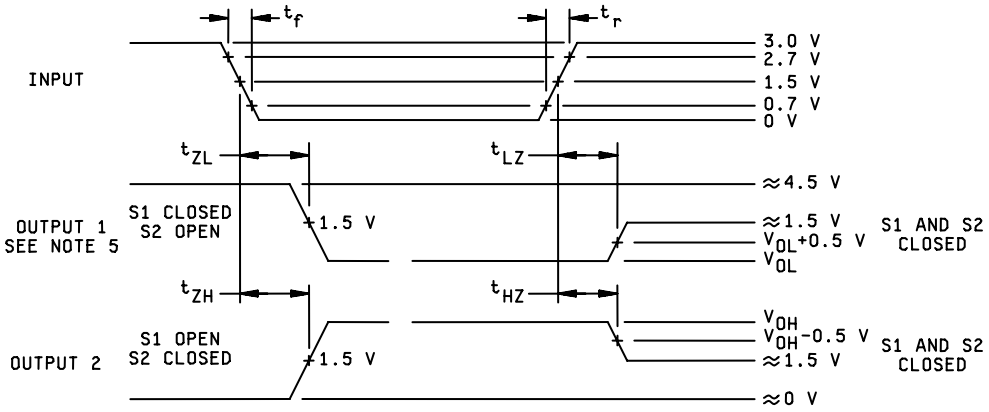

WAVEFORMS FOR STANDARD LOAD

FIGURE 9. Switching time test circuits and waveforms for device type 07 - Continued.

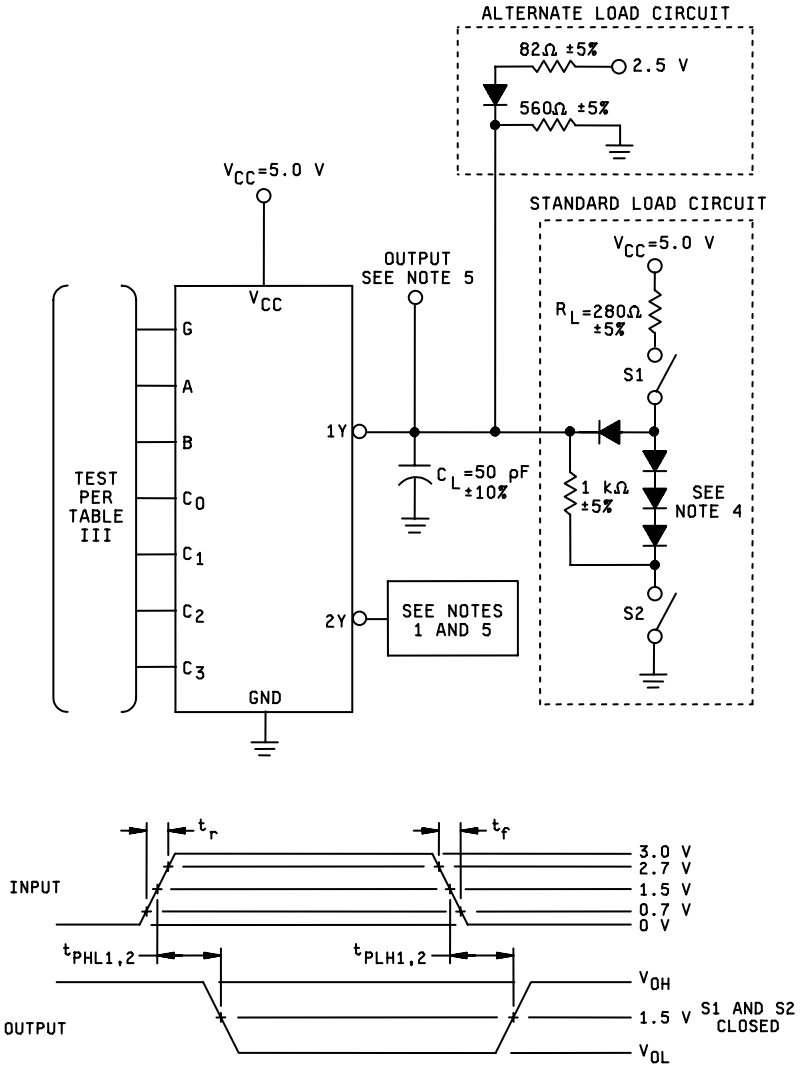

NOTES:

1. Connect same load as shown for 1Y output.
2. The input pulse has the following characteristics: $t_r = t_f \leq 2.5$ ns, PRR $\leq$ 1 MHz, and $Z_{OUT} \approx 50\ \Omega$.
3. C_L includes probe and jig capacitance.
4. All diodes are 1N3064 or equivalent.
5. Load circuit is required on a given output only where table III indicates “OUT” on that output. Load circuits may otherwise be omitted.

   A. Output 1 is for an output with internal conditions such that the output is low except when disabled by the output control.
   B. Output 2 is for an output with internal conditions such that the output is high except when disabled by the output control.
6. Manufacturer may test with either the standard load circuit or the alternate load circuit at his option.

FIGURE 10. Switching time test circuits and waveforms for device type 08.

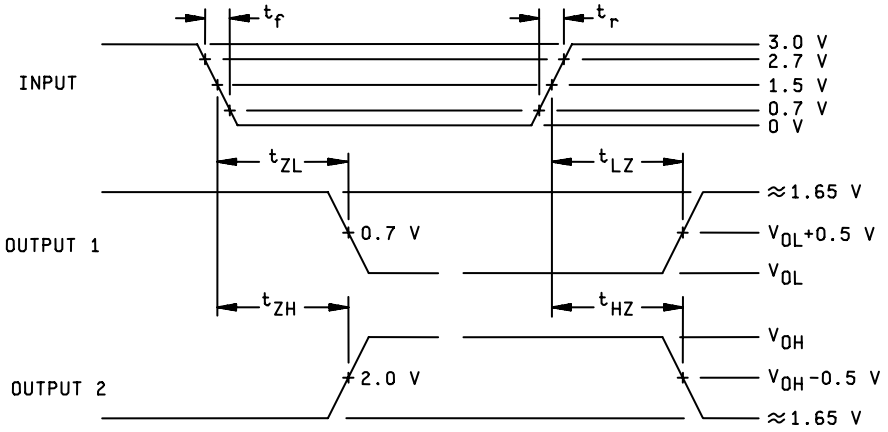

WAVEFORMS FOR ALTERNATE LOAD

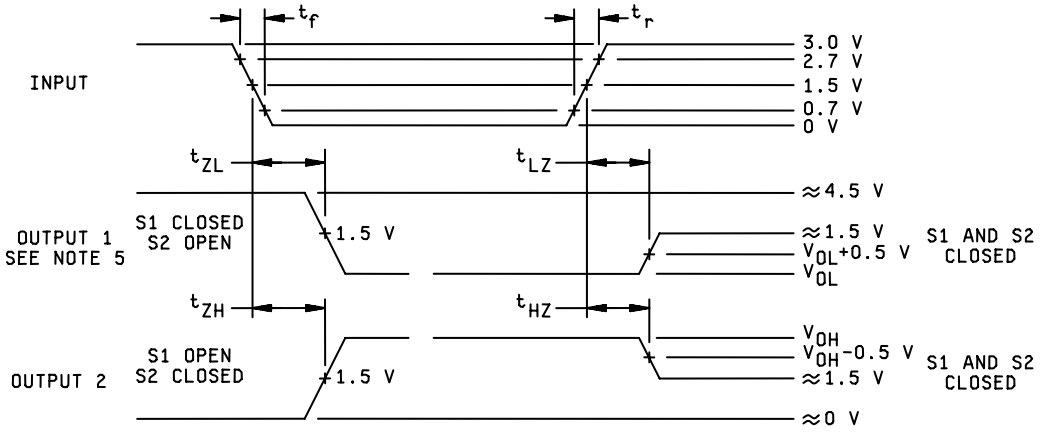

WAVEFORMS FOR STANDARD LOAD

FIGURE 10. Switching time test circuits and waveforms for device type 08 - Continued.

TABLE III. Group A inspection for device type 01

Terminal conditions (pins not designated may be H ≥ 2.0 V, or L ≤ 0.8 V, or open)

Subgroup	Symbol	MIL-STD-883 method	Cases E,F	1	2	3	4	5	6	7	8	9	10	11	12	13	14	15	16	Measured terminal	Test limits		Unit
			X, 2 5/	2	3	4	5	7	8	9	10	12	13	14	15	17	18	19	20		Min	Max	
			Test no.	D3	D2	D1	D0	Y	W	ST	GND	C	B	A	D7	D6	D5	D4	V_{CC}				
1	V_{OL}	3007	1				2.0 V		20 mA	0.8 V	GND	0.8 V	0.8 V	0.8 V					4.5 V	W		0.5	V
T_C = +25°C	V_{OL}	3007	2					20 mA		"	"	2.0 V	2.0 V	2.0 V	0.8 V				"	Y		0.5	"
	V_{OH}	3006	3						-1 mA	"	"	2.0 V	2.0 V	2.0 V	0.8 V				"	W	2.5		"
	V_{OH}	3006	4				2.0 V	-1 mA		"	"	0.8 V	0.8 V	0.8 V					"	Y	2.5		"
	I_{OS}	3011	5						GND	GND	"	5.5 V	5.5 V	5.5 V	GND				5.5 V	W	-40	-100 1/	mA
	I_{OS}	3011	6				5.5 V	GND		GND	"	GND	GND	GND					"	Y	-40	-100 1/	"
	I_{IH1}	3010	7	2.7 V						5.5 V	"	5.5 V	"	GND					"	D3		50	µA
		"	8		2.7 V					"	"	"	"	5.5 V					"	D2		"	"
		"	9			2.7 V				"	"	"	5.5 V	GND					"	D1		"	"
		"	10				2.7 V			"	"	"	5.5 V	5.5 V					"	D0		"	"
		"	11							2.7 V	"								"	ST		"	"
		"	12								"	2.7 V							"	C		"	"
		"	13								"		2.7 V						"	B		"	"
		"	14								"			2.7 V					"	A		"	"
		"	15							5.5 V	"	GND	GND	GND	2.7 V				"	D7		"	"
		"	16							"	"	"	GND	5.5 V		2.7 V			"	D6		"	"
		"	17							"	"	"	5.5 V	GND			2.7 V		"	D5		"	"
		"	18							"	"	"	5.5 V	5.5 V				2.7 V	"	D4		"	"
	I_{IH2}	"	19	5.5 V						"	"	5.5 V	GND	GND					"	D3		1.0	mA
		"	20		5.5 V					"	"	"	GND	5.5 V					"	D2		"	"
		"	21			5.5 V				"	"	"	5.5 V	GND					"	D1		"	"
		"	22				5.5 V			"	"	"	5.5 V	5.5 V					"	D0		"	"
		"	23							"	"								"	ST		"	"
		"	24								"	5.5 V							"	C		"	"
		"	25								"		5.5 V						"	B		"	"
		"	26								"			5.5 V					"	A		"	"
		"	27							5.5 V	"	GND	GND	GND	5.5 V				"	D7		"	"
		"	28							"	"	"	GND	5.5 V		5.5 V			"	D6		"	"
		"	29							"	"	"	5.5 V	GND			5.5 V		"	D5		"	"
		"	30							"	"	"	"	5.5 V				5.5 V	"	D4		"	"
	I_{IL1}	3009	31	0.5 V						GND	"	"	"	5.5 V					"	D3	-1	-2	"
		"	32		0.5 V					"	"	"	"	GND					"	D2	"	"	"
		"	33			0.5 V				"	"	"	GND	5.5 V					"	D1	"	"	"
		"	34				0.5 V			"	"	"	GND	GND					"	D0	"	"	"
		"	35							0.5 V	"								"	ST	"	"	"
		"	36								"	0.5 V							"	C	"	"	"
		"	37								"		0.5 V						"	B	"	"	"
		"	38								"			0.5 V					"	A	"	"	"
		"	39							GND	"	5.5 V	5.5 V	5.5 V	0.5 V				"	D7	"	"	"
		"	40							"	"	"	5.5 V	GND		0.5 V			"	D6	"	"	"
		"	41							"	"	"	GND	5.5 V			0.5 V		"	D5	"	"	"
		"	42							"	"	"	"	GND				0.5 V	"	D4	"	"	"

See footnotes at end of device type 01.

TABLE III. Group A inspection for device type 01 – Continued.
Terminal conditions (pins not designated may be H ≥ 2.0 V, or L ≤ 0.8 V, or open)

Subgroup	Symbol	MIL-STD-883 method	Cases E,F	1	2	3	4	5	6	7	8	9	10	11	12	13	14	15	16	Measured terminal	Test limits		Unit
			X, 2 5/	2	3	4	5	7	8	9	10	12	13	14	15	17	18	19	20		Min	Max	
			Test no.	D3	D2	D1	D0	Y	W	ST	GND	C	B	A	D7	D6	D5	D4	V_{CC}				
1 T_C = +25°C (cont')	I_{CC}	3005	43	GND	GND	GND	GND			GND	GND	GND	GND	GND	GND	GND	GND	GND	5.5 V	V_{CC}		70	mA
	I_{CEX}		44						5.5 V	"	"	5.5 V	5.5 V	5.5 V	GND				5.5 V	W		250	µA
			45				5.5 V	5.5 V		"	"	GND	GND	GND					5.5 V	Y		250	µA
	V_{IC}		46	-18 mA							"								4.5 V	D3		-1.2	V
			47		-18 mA						"								"	D2		"	"
			48			-18 mA					"								"	D1		"	"
			49				-18 mA				"								"	D0		"	"
			50							-18 mA	"								"	ST		"	"
			51								"	-18 mA							"	C		"	"
			52								"		-18 mA						"	B		"	"
			53								"			-18 mA					"	A		"	"
			54								"				-18 mA				"	D7		"	"
			55								"					-18 mA			"	D6		"	"
			56								"						-18 mA		"	D5		"	"
			57								"							-18 mA	"	D4		"	"
2	Same tests, terminal conditions, and limits as for subgroup 1, except T_C = +125°C and V_{IC} tests are omitted. V_{IL} = 0.7 V, V_{OL} (max) = 0.45 V.																						
3	Same tests, terminal conditions, and limits as for subgroup 1, except T_C = -55°C and V_{IC} tests are omitted.																						
7 T_C = +25°C	Truth table test	3014	58	A 2/	A 2/	A 2/	A 2/	L	H	A 2/	GND	A 2/	A 2/	A 2/	A 2/	A 2/	A 2/	A 2/	4.5 V	3/			
		"	59	A	A	A	B	L	H	B	"	B	B	B	A	A	A	A	"	"			
		"	60	B	B	B	A	H	L	"	"	"	"	B	B	B	B	B	"	"			
		"	61	A	A	B	A	L	H	"	"	"	"	A	A	A	A	A	"	"			
		"	62	B	B	A	B	H	L	"	"	"	"	A	B	B	B	B	"	"			
		"	63	A	B	A	A	L	H	"	"	"	A	B	A	A	A	A	"	"			
		"	64	B	A	B	B	H	L	"	"	"	"	B	B	B	B	B	"	"			
		"	65	B	A	A	A	L	H	"	"	"	"	A	A	A	A	A	"	"			
		"	66	A	B	B	B	H	L	"	"	"	"	A	B	B	B	B	"	"			
		"	67	A	A	A	A	L	H	"	"	A	B	B	A	A	A	B	"	"			
		"	68	B	B	B	B	H	L	"	"	"	"	B	B	B	B	A	"	"			
		"	69	A	A	A	A	L	H	"	"	"	"	A	A	A	B	A	"	"			
		"	70	B	B	B	B	H	L	"	"	"	"	A	B	B	A	B	"	"			
		"	71	A	A	A	A	L	H	"	"	"	A	B	A	B	A	A	"	"			
		"	72	B	B	B	B	H	L	"	"	"	"	B	B	A	B	B	"	"			
		"	73	A	A	A	A	L	H	"	"	"	"	A	B	A	A	A	"	"			
		"	74	B	B	B	B	H	L	"	"	"	"	A	A	B	B	B	"	"			

See footnotes at end of device type 01.

TABLE III. Group A inspection for device type 01 – Continued.
Terminal conditions (pins not designated may be H ≥ 2.0 V, or L ≤ 0.8 V, or open)

Subgroup	Symbol	MIL-STD-883 method	Cases E,F	1	2	3	4	5	6	7	8	9	10	11	12	13	14	15	16	Measured terminal	Test limits		Unit
			X, 2 5/	2	3	4	5	7	8	9	10	12	13	14	15	17	18	19	20		Min	Max	
			Test no.	D3	D2	D1	D0	Y	W	ST	GND	C	B	A	D7	D6	D5	D4	V_{CC}				
8	Repeat subgroup 7 at T_C = +125°C and -55°C.																						
9	t_{PHL1}	3003	75			2.7 V	GND		OUT	GND	GND	GND	GND	IN					5.0 V	W	2.0	15.5	ns
T_C = +25°C		Fig. 4	76		2.7 V		"		"	"	"	GND	IN	GND					"	"	"	"	"
		"	77				"		"	"	"	IN	GND	GND				2.7 V	"	"	"	"	"
	t_{PLH1}	"	78			2.7 V	"		"	"	"	GND	GND	IN					"	"	"	17.0	"
		"	79		2.7 V		"		"	"	"	GND	IN	GND					"	"	"	"	"
		"	80				"		"	"	"	IN	GND	GND				2.7 V	"	"	"	"	"
	t_{PHL2}	"	81			2.7 V	"	OUT		"	"	GND	GND	IN					"	Y	"	20	"
		"	82		2.7 V		"	"		"	"	GND	IN	GND					"	"	"	"	"
		"	83				"	"		"	"	IN	GND	GND				2.7 V	"	"	"	"	"
	t_{PLH2}	"	84			2.7 V	"	"		"	"	GND	GND	IN					"	"	"	"	"
		"	85		2.7 V		"	"		"	"	GND	IN	GND					"	"	"	"	"
		"	86				"	"		"	"	IN	GND	GND				2.7 V	"	"	"	"	"
	t_{PHL3}	"	87				2.7 V		OUT	IN	"	GND	"	"					"	W	"	14.0	"
	t_{PLH3}	"	88				"		OUT	"	"	"	"	"					"	W	"	15.0	"
	t_{PHL4}	"	89				"	OUT		"	"	"	"	"					"	Y	"	20	"
	t_{PLH4}	"	90				"	OUT		"	"	"	"	"					"	Y	"	18.5	"
	t_{PHL5}	"	91				IN		OUT	GND	"	"	"	"					"	W	"	9.0	"
		"	92			IN			"	"	"	"	"	2.7 V					"	"	"	"	"
		"	93		IN				"	"	"	"	2.7 V	GND					"	"	"	"	"
		"	94	IN					"	"	"	"	2.7 V	2.7 V					"	"	"	"	"
		"	95						"	"	"	2.7 V	GND	GND				IN	"	"	"	"	"
		"	96						"	"	"	"	GND	2.7 V			IN		"	"	"	"	"
		"	97						"	"	"	"	2.7 V	GND		IN			"	"	"	"	"
		"	98						"	"	"	"	2.7 V	2.7 V	IN				"	"	"	"	"
	t_{PLH5}	"	99				IN		"	"	"	GND	GND	GND					"	"	"	"	"
		"	100			IN			"	"	"	"	GND	2.7 V					"	"	"	"	"
		"	101		IN				"	"	"	"	2.7 V	GND					"	"	"	"	"
		"	102	IN					"	"	"	"	2.7 V	2.7 V					"	"	"	"	"
		"	103						"	"	"	2.7 V	GND	GND				IN	"	"	"	"	"
		"	104						"	"	"	"	GND	2.7 V			IN		"	"	"	"	"
		"	105						"	"	"	"	2.7 V	GND		IN			"	"	"	"	"
		"	106						"	"	"	"	2.7 V	2.7 V	IN				"	"	"	"	"

See footnotes at end of device type 01

TABLE III. Group A inspection for device type 01 – Continued.
Terminal conditions (pins not designated may be H ≥ 2.0 V, or L ≤ 0.8 V, or open)

Subgroup	Symbol	MIL-STD-883 method	Cases E,F	1	2	3	4	5	6	7	8	9	10	11	12	13	14	15	16	Measured terminal	Test limits		Unit
			X, 2 5/	2	3	4	5	7	8	9	10	12	13	14	15	17	18	19	20		Min	Max	
			Test no.	D3	D2	D1	D0	Y	W	ST	GND	C	B	A	D7	D6	D5	D4	V_{CC}				
9	t_{PHL6}	3003	107				IN	OUT		GND	GND	GND	GND	GND					5.0 V	Y	2.0	14.0	ns
T_C = +25°C		Fig. 4	108			IN		"		"	"	"	GND	2.7 V					"	"	"	"	"
		"	109		IN			"		"	"	"	2.7 V	GND					"	"	"	"	"
		"	110	IN				"		"	"	"	2.7 V	2.7 V					"	"	"	"	"
		"	111					"		"	"	2.7 V	GND	GND				IN	"	"	"	"	"
		"	112					"		"	"	"	GND	2.7 V			IN		"	"	"	"	"
		"	113					"		"	"	"	2.7 V	GND		IN			"	"	"	"	"
		"	114					"		"	"	"	2.7 V	2.7 V	IN				"	"	"	"	"
	t_{PLH6}	"	115				IN	"		"	"	GND	GND	GND					"	"	"	"	"
		"	116			IN		"		"	"	"	GND	2.7 V					"	"	"	"	"
		"	117		IN			"		"	"	"	2.7 V	GND					"	"	"	"	"
		"	118	IN				"		"	"	"	2.7 V	2.7 V					"	"	"	"	"
		"	119					"		"	"	2.7 V	GND	GND				IN	"	"	"	"	"
		"	120					"		"	"	"	GND	2.7 V			IN		"	"	"	"	"
		"	121					"		"	"	"	2.7 V	GND		IN			"	"	"	"	"
		"	122					"		"	"	"	2.7 V	2.7 V	IN				"	"	"	"	"
10	t_{PHL1}	"	123			2.7 V	GND		OUT	"	"	GND	GND	IN					"	W	"	20	"
T_C = +125°C		"	124		2.7 V		"		"	"	"	GND	IN	GND					"	"	"	"	"
		"	125				"		"	"	"	IN	GND	GND				2.7 V	"	"	"	"	"
	t_{PLH1}	"	126			2.7 V	"		"	"	"	GND	GND	IN					"	"	"	22	"
		"	127		2.7 V		"		"	"	"	GND	IN	GND					"	"	"	"	"
		"	128				"		"	"	"	IN	GND	GND				2.7 V	"	"	"	"	"
	t_{PHL2}	"	129			2.7 V	"	OUT		"	"	GND	GND	IN					"	Y	"	26	"
		"	130		2.7 V		"	"		"	"	GND	IN	GND					"	"	"	"	"
		"	131				"	"		"	"	IN	GND	GND				2.7 V	"	"	"	"	"
	t_{PLH2}	"	132			2.7 V	"	"		"	"	GND	GND	IN					"	"	"	"	"
		"	133		2.7 V		"	"		"	"	GND	IN	GND					"	"	"	"	"
		"	134				"	"		"	"	IN	GND	GND				2.7 V	"	"	"	"	"
	t_{PHL3}	"	135				2.7 V		OUT	IN	"	GND	"	"					"	W	"	18	"
	t_{PLH3}	"	136				"		OUT	"	"	"	"	"					"	W	"	19.5	"
	t_{PHL4}	"	137				"	OUT		"	"	"	"	"					"	Y	"	26	"
	t_{PLH4}	"	138				"	OUT		"	"	"	"	"					"	Y	"	24	"

See footnotes at end of device type 02

TABLE III. Group A inspection for device type 01 – Continued.
Terminal conditions (pins not designated may be H ≥ 2.0 V, or L ≤ 0.8 V, or open)

Subgroup	Symbol	MIL-STD-883 method	Cases E,F	1	2	3	4	5	6	7	8	9	10	11	12	13	14	15	16	Measured terminal	Test limits		Unit
			X, 2 5/	2	3	4	5	7	8	9	10	12	13	14	15	17	18	19	20		Min	Max	
			Test no.	D3	D2	D1	D0	Y	W	ST	GND	C	B	A	D7	D6	D5	D4	V_{CC}				
10	t_{PHL5}	3003	139				IN		OUT	GND	GND	GND	GND	GND					5.0 V	W	2.0	11.5	ns
T_C = +125°C		Fig. 4	140			IN			"	"	"	"	GND	2.7 V					"	"	"	"	"
		"	141		IN				"	"	"	"	2.7 V	GND					"	"	"	"	"
		"	142	IN					"	"	"	"	2.7 V	2.7 V					"	"	"	"	"
		"	143						"	"	"	2.7 V	GND	GND				IN	"	"	"	"	"
		"	144						"	"	"	"	GND	2.7 V			IN		"	"	"	"	"
		"	145						"	"	"	"	2.7 V	GND		IN			"	"	"	"	"
		"	146						"	"	"	"	2.7 V	2.7 V	IN				"	"	"	"	"
	t_{PLH5}	"	147				IN		"	"	"	GND	GND	GND					"	"	"	"	"
		"	148			IN			"	"	"	"	GND	2.7 V					"	"	"	"	"
		"	149		IN				"	"	"	"	2.7 V	GND					"	"	"	"	"
		"	150	IN					"	"	"	"	2.7 V	2.7 V					"	"	"	"	"
		"	151						"	"	"	2.7 V	GND	GND				IN	"	"	"	"	"
		"	152						"	"	"	"	GND	2.7 V			IN		"	"	"	"	"
		"	153						"	"	"	"	2.7 V	GND		IN			"	"	"	"	"
		"	154						"	"	"	"	2.7 V	2.7 V	IN				"	"	"	"	"
	t_{PHL6}	"	155				IN	OUT		"	"	GND	GND	GND					"	Y	"	18	"
		"	156			IN		"		"	"	"	GND	2.7 V					"	"	"	"	"
		"	157		IN			"		"	"	"	2.7 V	GND					"	"	"	"	"
		"	158	IN				"		"	"	"	2.7 V	2.7 V					"	"	"	"	"
		"	159					"		"	"	2.7 V	GND	GND				IN	"	"	"	"	"
		"	160					"		"	"	"	GND	2.7 V			IN		"	"	"	"	"
		"	161					"		"	"	"	2.7 V	GND		IN			"	"	"	"	"
		"	162					"		"	"	"	2.7 V	2.7 V	IN				"	"	"	"	"
10	t_{PLH6}	"	163				IN	"		"	"	GND	GND	GND					"	"	"	"	"
T_C = +125°C		"	164			IN		"		"	"	"	GND	2.7 V					"	"	"	"	"
		"	165		IN			"		"	"	"	2.7 V	GND					"	"	"	"	"
		"	166	IN				"		"	"	"	2.7 V	2.7 V					"	"	"	"	"
		"	167					"		"	"	2.7 V	GND	GND				IN	"	"	"	"	"
		"	168					"		"	"	"	GND	2.7 V			IN		"	"	"	"	"
		"	169					"		"	"	"	2.7 V	GND		IN			"	"	"	"	"
		"	170					"		"	"	"	2.7 V	2.7 V	IN				"	"	"	"	"
11	Same tests, terminal conditions, and limits as for subgroup 10, except T_C = -55°C.																						

1/ For circuit B, $I_{OS(max)}$ = -110 mA.

2/ A = 2.4 V; B = 0.4 V.

3/ H ≥ 1.5 V; L ≤ 1.5 V.

4/ Only a summary of attributes is required.

5/ Case 2 pins not designated are NC.

TABLE III. Group A inspection for device type 02

Terminal conditions (pins not designated may be H ≥ 2.0 V, or L ≤ 0.8 V, or open)

Subgroup	Symbol	MIL-STD-883 method	Cases E,F	1	2	3	4	5	6	7	8	9	10	11	12	13	14	15	16	Measured terminal	Test limits		Unit
			X, 2 5/	2	3	4	5	7	8	9	10	12	13	14	15	17	18	19	20		Min	Max	
			Test no.	1G	B	1C3	1C2	1C1	1C0	1Y	GND	2Y	2C0	2C1	2C2	2C3	A	2G	V_{CC}				
1	V_{OH}	3006	1	0.8 V	0.8 V				2.0 V	-1 mA	GND						0.8 V		4.5 V	1Y	2.5		V
T_C = +25°C	V_{OH}	3006	2		0.8 V						"	-1 mA	2.0 V				0.8 V	0.8 V	"	2Y	2.5		"
	V_{OL}	3007	3	2.0 V						20 mA	"								"	1Y		0.5	"
	V_{OL}	3007	4								"	20 mA						2.0 V	"	2Y		0.5	"
	V_{IC}		5								"						-18 mA		"	A		-1.2	"
			6		-18 mA						"								"	B		"	"
			7						-18 mA		"								"	1C0		"	"
			8					-18 mA			"								"	1C1		"	"
			9				-18 mA				"								"	1C2		"	"
			10			-18 mA					"								"	1C3		"	"
			11	-18 mA							"								"	1G		"	"
			12								"		-18 mA						"	2C0		"	"
			13								"			-18 mA					"	2C1		"	"
			14								"				-18 mA				"	2C2		"	"
			15								"					-18 mA			"	2C3		"	"
			16								"							-18 mA	"	2G		"	"
	I_{IL}	3009	17								"						0.5 V		5.5 V	A	-1.0	-2.0	mA
		"	18		0.5 V						"								"	B	"	"	"
		"	19	0.5 V							"								"	1G	"	"	"
		"	20								"							0.5 V	"	2G	"	"	"
		"	21	GND	GND				0.5 V		"						GND		"	1C0	"	"	"
		"	22	"	GND			0.5 V			"						5.5 V		"	1C1	"	"	"
		"	23	"	5.5 V		0.5 V				"						GND		"	1C2	"	"	"
		"	24	"	5.5 V	0.5 V					"						5.5 V		"	1C3	"	"	"
		"	25		GND						"		0.5 V				GND	GND	"	2C0	"	"	"
		"	26		GND						"			0.5 V			5.5 V	"	"	2C1	"	"	"
		"	27		5.5 V						"				0.5 V		GND	"	"	2C2	"	"	"
		"	28		5.5 V						"					0.5 V	5.5 V	"	"	2C3	"	"	"
	I_{IH1}	3010	29								"						2.7 V		"	A		50	µA
		"	30		2.7 V						"								"	B		"	"
		"	31	2.7 V							"								"	1G		"	"
		"	32								"							2.7 V	"	2G		"	"
		"	33	5.5 V	5.5 V				2.7 V		"						5.5 V		"	1C0		"	"
		"	34	"	5.5 V			2.7 V			"						GND		"	1C1		"	"
		"	35	"	GND		2.7 V				"						5.5 V		"	1C2		"	"
		"	36	"	GND	2.7 V					"						GND		"	1C3		"	"
		"	37		5.5 V						"		2.7 V				5.5 V	5.5 V	"	2C0		"	"
		"	38		5.5 V						"			2.7 V			GND	"	"	2C1		"	"
		"	39		GND						"				2.7 V		5.5 V	"	"	2C2		"	"
		"	40		GND						"					2.7 V	GND	"	"	2C3	"	"	"

See footnotes at end of device type 02

TABLE III. Group A inspection for device type 02 – Continued.
Terminal conditions (pins not designated may be H ≥ 2.0 V, or L ≤ 0.8 V, or open)

Subgroup	Symbol	MIL-STD-883 method	Cases E,F	1	2	3	4	5	6	7	8	9	10	11	12	13	14	15	16	Measured terminal	Test limits Min	Test limits Max	Unit
			X, 2 5/	2	3	4	5	7	8	9	10	12	13	14	15	17	18	19	20				
			Test no.	1G	B	1C3	1C2	1C1	1C0	1Y	GND	2Y	2C0	2C1	2C2	2C3	A	2G	V_{CC}				
1	I_{IH2}	3010	41								GND						5.5 V		5.5 V	A		1.0	mA
T_C = +25°C		"	42		5.5 V						"								"	B		"	"
		"	43	5.5 V							"								"	1G		"	"
		"	44								"							5.5 V	"	2G		"	"
		"	45	5.5 V	5.5 V				5.5 V		"						5.5 V		"	1C0		"	"
		"	46	"	5.5 V			5.5 V			"						GND		"	1C1		"	"
		"	47	"	GND		5.5 V				"						5.5 V		"	1C2		"	"
		"	48	"	GND	5.5 V					"						GND		"	1C3		"	"
		"	49		5.5 V						"		5.5 V				5.5 V	5.5 V	"	2C0		"	"
	I_{IH2}	"	50		5.5 V						"			5.5 V			GND	"	"	2C1		1.0	mA
		"	51		GND						"				5.5 V		5.5 V	"	"	2C2		"	"
		"	52		"						"					5.5 V	GND	"	"	2C3		"	"
	I_{OS}	3011	53	GND	"				5.5 V	GND	"						"		"	1Y	-40	-100 1/	"
		"	54	"	"						"	GND	5.5 V				"	GND	"	2Y	-40	-100 1/	"
	I_{CC}	3005	55	"	"	GND	GND	GND	GND		"		GND	GND	GND	GND	"	GND	"	V_{CC}		70	"
	I_{CEX}		56	GND	"				5.5 V	5.5 V	"						"		"	1Y		250	µA
			57		"						"	5.5 V	5.5 V				"	GND	"	2Y		250	µA
2	Same tests, terminal conditions, and limits as for subgroup 1, except T_C = +125°C and V_{IC} tests are omitted. V_{IL} = 0.7 V, V_{OL} = 0.45 V.																						
3	Same tests, terminal conditions, and limits as for subgroup 1, except T_C = -55°C and V_{IC} tests are omitted.																						
7 2/	Truth	3014	58	A 3/	B 3/	A 3/	A 3/	A 3/	A 3/	L	GND	L	A 2/	A 2/	A 2/	A 2/	B 2/	A 2/	4.5 V	See 4/			
T_C = +25°C	table	"	59	B	"	A	A	A	B	L	"	L	B	A	A	A	"	B	"	"			
	test	"	60	"	"	B	B	B	A	H	"	H	A	B	B	B	"	"	"	"			
		"	61	"	"	A	A	B	A	L	"	L	A	B	A	A	A	"	"	"			
		"	62	"	"	B	B	A	B	H	"	H	B	A	B	B	A	"	"	"			
		"	63	"	A	A	B	A	A	L	"	L	A	A	B	A	B	"	"	"			
		"	64	"	"	B	A	B	B	H	"	H	B	B	A	B	B	"	"	"			
		"	65	"	"	B	A	A	A	L	"	L	A	A	A	B	A	"	"	"			
		"	66	"	"	A	B	B	B	H	"	H	B	B	B	A	A	"	"	"			
8	Same tests, terminal conditions, and limits as for subgroup 7, except T_C = +125°C and -55°C.																						

See footnotes at end of device type 02

TABLE III. Group A inspection for device type 02 – Continued.
Terminal conditions (pins not designated may be H ≥ 2.0 V, or L ≤ 0.8 V, or open)

Subgroup	Symbol	MIL-STD-883 method	Cases E,F	1	2	3	4	5	6	7	8	9	10	11	12	13	14	15	16	Measured terminal	Test limits		Unit
			X, 2 5/	2	3	4	5	7	8	9	10	12	13	14	15	17	18	19	20		Min	Max	
			Test no.	1G	B	1C3	1C2	1C1	1C0	1Y	GND	2Y	2C0	2C1	2C2	2C3	A	2G	V_{CC}				
9	t_{PHL1}	3003	67	GND	GND				IN	OUT	GND						GND		5.0 V	1Y	2.0	11.0	ns
T_C = +25°C		Fig. 5	68	"	GND			IN		"	"						2.7 V		"	"	"	"	"
		"	69	"	2.7 V		IN			"	"						GND		"	"	"	"	"
		"	70	"	2.7 V	IN				"	"						2.7 V		"	"	"	"	"
		"	71		GND						"	OUT	IN				GND	GND	"	2Y	"	"	"
		"	72		GND						"	"		IN			2.7 V	"	"	"	"	"	"
		"	73		2.7 V						"	"			IN		GND	"	"	"	"	"	"
		"	74		2.7 V						"	"				IN	2.7 V	"	"	"	"	"	"
	t_{PLH1}	"	75	GND	GND				IN	OUT	"						GND		"	1Y	"	"	"
		"	76	"	GND			IN		"	"						2.7 V		"	"	"	"	"
		"	77	"	2.7 V		IN			"	"						GND		"	"	"	"	"
		"	78	"	2.7 V	IN				"	"						2.7 V		"	"	"	"	"
		"	79		GND						"	OUT	IN				GND	GND	"	2Y	"	"	"
		"	80		GND						"	"		IN			2.7 V	"	"	"	"	"	"
		"	81		2.7 V						"	"			IN		GND	"	"	"	"	"	"
		"	82		2.7 V						"	"				IN	2.7 V	"	"	"	"	"	"
	t_{PHL2}	"	83	GND	GND			GND	2.7 V	OUT	"						IN		"	1Y	"	20	"
		"	84	GND	IN		GND		2.7 V	OUT	"						GND		"	1Y	"	"	"
		"	85		GND						"	OUT	2.7 V	GND			IN	GND	"	2Y	"	"	"
		"	86		IN						"	OUT	2.7 V		GND		GND	GND	"	2Y	"	"	"
	t_{PLH2}	"	87	GND	GND			GND	2.7 V	OUT	GND						IN		"	1Y	"	"	"
		"	88	GND	IN		GND		2.7 V	OUT	"						GND		"	1Y	"	"	"
		"	89		GND						"	OUT	2.7 V	GND			IN	GND	"	2Y	"	"	"
		"	90		IN						"	OUT	2.7 V		GND		GND	GND	"	2Y	"	"	"
	t_{PHL3}	"	91	IN	GND				2.7 V	OUT	"						"		"	1Y	"	15.5	"
		"	92		"						"	OUT	2.7 V				"	IN	"	2Y	"	15.5	"
	t_{PLH3}	"	93	IN	"				2.7 V	OUT	"						"		"	1Y	"	17.0	"
		"	94		"						"	OUT	2.7 V				"	IN	"	2Y	"	17.0	"

See footnotes at end of device type 02

TABLE III. Group A inspection for device type 02 – Continued.
Terminal conditions (pins not designated may be H ≥ 2.0 V, or L ≤ 0.8 V, or open)

Subgroup	Symbol	MIL-STD-883 method	Cases E,F	1	2	3	4	5	6	7	8	9	10	11	12	13	14	15	16	Measured terminal	Test limits		Unit
			X, 2 5/	2	3	4	5	7	8	9	10	12	13	14	15	17	18	19	20		Min	Max	
			Test no.	1G	B	1C3	1C2	1C1	1C0	1Y	GND	2Y	2C0	2C1	2C2	2C3	A	2G	V_{CC}				
10	t_{PHL1}	3003	95	GND	GND				IN	OUT	GND						GND		5.0 V	1Y	2.0	14.5	ns
T_C = +125°C		Fig. 5	96	"	GND			IN		"	"						2.7 V		"	"	"	"	"
		"	97	"	2.7 V		IN			"	"						GND		"	"	"	"	"
		"	98	"	2.7 V	IN				"	"						2.7 V		"	"	"	"	"
		"	99		GND						"	OUT	IN				GND	GND	"	2Y	"	"	"
		"	100		GND						"	"		IN			2.7 V	"	"	"	"	"	"
		"	101		2.7 V						"	"			IN		GND	"	"	"	"	"	"
		"	102		2.7 V						"	"				IN	2.7 V	"	"	"	"	"	"
	t_{PLH1}	"	103	GND	GND				IN	OUT	"						GND		"	1Y	"	14.5	"
		"	104	"	GND			IN		"	"						2.7 V		"	"	"	"	"
		"	105	"	2.7 V		IN			"	"						GND		"	"	"	"	"
		"	106	"	2.7 V	IN				"	"						2.7 V		"	"	"	"	"
		"	107		GND						"	OUT	IN				GND	GND	"	2Y	"	"	"
		"	108		GND						"	"		IN			2.7 V	"	"	"	"	"	"
		"	109		2.7 V						"	"			IN		GND	"	"	"	"	"	"
		"	110		2.7 V						"	"				IN	2.7 V	"	"	"	"	"	"
	t_{PHL2}	"	111	GND	GND			GND	2.7 V	OUT	"						IN		"	1Y	"	26	"
		"	112	GND	IN		GND		2.7 V	OUT	"						GND		"	1Y	"	"	"
		"	113		GND						"	OUT	2.7 V	GND			IN	GND	"	2Y	"	"	"
		"	114		IN						"	OUT	2.7 V		GND		GND	GND	"	2Y	"	"	"
	t_{PLH2}	"	115	GND	GND			GND	2.7 V	OUT	"						IN		"	1Y	"	26	"
		"	116	GND	IN		GND		2.7 V	OUT	"						GND		"	1Y	"	"	"
		"	117		GND						"	OUT	2.7 V	GND			IN	GND	"	2Y	"	"	"
		"	118		IN						"	OUT	2.7 V		GND		GND	GND	"	2Y	"	"	"
	t_{PHL3}	"	119	IN	GND				2.7 V	OUT	"						"	IN	"	1Y	"	21	"
		"	120		"						"	OUT	2.7 V				"		"	2Y	"	21	"
	t_{PLH3}	"	121	IN	"				2.7 V	OUT	"						"	IN	"	1Y	"	22	"
		"	122		"						"	OUT	2.7 V				"		"	2Y	"	22	"
11	Same tests, terminal conditions, and limits as for subgroup 10 except T_C = -55°C.																						

1/ For circuit B, $I_{OS(max)}$ = -110 mA

2/ Only a summary of attributes is required.

3/ A = 2.4 V; B = 0.4 V.

4/ H ≥ 1.5 V; L ≤ 1.5 V.

5/ Case 2 pins not designated are NC.

TABLE III. Group A inspection for device type 03
Terminal conditions (pins not designated may be H ≥ 2.0 V, or L ≤ 0.8 V, or open)

Subgroup	Symbol	MIL-STD-883 method	Cases E,F	1	2	3	4	5	6	7	8	9	10	11	12	13	14	15	16	Measured terminal	Test limits		Unit
			X, 2 5/	2	3	4	5	7	8	9	10	12	13	14	15	17	18	19	20		Min	Max	
			Test no.	S	1A	1B	1Y	2A	2B	2Y	GND	3Y	3B	3A	4Y	4B	4A	G	V_{CC}				
1	V_{OH}	3006	1	2.0 V		2.0 V	-1 mA				GND							0.8 V	4.5 V	1Y	2.5		V
T_C = +25°C		"	2	"					2.0 V	-1 mA	"							"	"	2Y	"		"
		"	3	"							"	-1 mA	2.0 V					"	"	3Y	"		"
		"	4	"							"				-1 mA	2.0 V		"	"	4Y	"		"
	V_{OL}	3007	5				20 mA				"							2.0 V	"	1Y		0.5	"
		"	6							20 mA	"							"	"	2Y		"	"
		"	7								"	20 mA						"	"	3Y		"	"
		"	8								"				20 mA			"	"	4Y		"	"
	V_{IC}		9	-18 mA							"								"	S		-1.2	"
			10		-18 mA						"								"	1A		"	"
			11			-18 mA					"								"	1B		"	"
			12					-18 mA			"								"	2A		"	"
			13						-18 mA		"								"	2B		"	"
			14								"		-18 mA						"	3B		"	"
			15								"			-18 mA					"	3A		"	"
			16								"					-18 mA			"	4B		"	"
			17								"						-18 mA		"	4A		"	"
			18								"							-18 mA	"	G		"	"
	I_{IL}	3009	19	5.5 V							"							0.5 V	5.5 V	G	-2 6/	-4 6/	mA
		"	20	0.5 V							"							5.5 V	"	S	-2 6/	-4 6/	"
		"	21	GND	0.5 V						"							GND	"	1A	-1 7/	-2 7/	"
		"	22	5.5 V		0.5 V					"							"	"	1B	" "	" "	"
		"	23	GND				0.5 V			"							"	"	2A	" "	" "	"
		"	24	5.5 V					0.5 V		"							"	"	2B	" "	" "	"
		"	25	5.5 V							"		0.5 V					"	"	3B	" "	" "	"
		"	26	GND							"			0.5 V				"	"	3A	" "	" "	"
		"	27	5.5 V							"					0.5 V		"	"	4B	" "	" "	"
		"	28	GND							"						0.5 V	"	"	4A	" "	" "	"
	I_{IH1}	3010	29	GND							"							2.7 V	"	G		100	μA
		"	30	2.7 V							"							GND	"	S		100	"
		"	31		2.7 V						"							5.5 V	"	1A		50	"
		"	32			2.7 V					"							"	"	1B		"	"
		"	33					2.7 V			"							"	"	2A		"	"
		"	34						2.7 V		"							"	"	2B		"	"
		"	35								"		2.7 V					"	"	3B		"	"
		"	36								"			2.7 V				"	"	3A		"	"
		"	37								"					2.7 V		"	"	4B		"	"
		"	38								"						2.7 V	"	"	4A		"	"

See footnotes at end of device type 03

TABLE III. Group A inspection for device type 03 – Continued.
Terminal conditions (pins not designated may be H ≥ 2.0 V, or L ≤ 0.8 V, or open)

Subgroup	Symbol	MIL-STD-883 method	Cases E,F	1	2	3	4	5	6	7	8	9	10	11	12	13	14	15	16	Measured terminal	Test limits		Unit
			X, 2 5/	2	3	4	5	7	8	9	10	12	13	14	15	17	18	19	20		Min	Max	
			Test no.	S	1A	1B	1Y	2A	2B	2Y	GND	3Y	3B	3A	4Y	4B	4A	G	V_{CC}				
1	I_{IH2}	3010	39	GND							GND							5.5 V	5.5 V	G		1.0	mA
T_C = +25°C		"	40	5.5 V							"							GND	"	S		"	"
		"	41		5.5 V						"							5.5 V	"	1A		"	"
		"	42			5.5 V					"							"	"	1B		"	"
		"	43					5.5 V			"							"	"	2A		"	"
		"	44						5.5 V		"							"	"	2B		"	"
		"	45								"		5.5 V					"	"	3B		"	"
		"	46								"			5.5 V				"	"	3A		"	"
		"	47								"					5.5 V		"	"	4B		"	"
		"	48								"						5.5 V	"	"	4A		"	"
	I_{OS}	3011	49	5.5 V		5.5 V	GND				"							GND	"	1Y	-40	-100 1/	"
		3011	50	"					5.5 V	GND	"							GND	"	2Y	-40	-100 1/	"
	I_{OS}	3011	51	"							"	GND	5.5 V					GND	5.5 V	3Y	-40	-100 1/	mA
		3011	52	"							"				GND	5.5 V		GND	"	4Y	-40	-100 1/	"
	I_{CC}	3005	53	"	GND	GND		GND	GND		"		GND	GND		GND	GND	5.5 V	"	V_{CC}		78	
	I_{CEX}		54	"		5.5 V	5.5 V				"							GND	"	1Y		250	µA
			55	"					5.5 V	5.5 V	"							"	"	2Y		"	"
			56	"							"	5.5 V	5.5 V					"	"	3Y		"	"
			57	"							"				5.5 V	5.5 V		"	"	4Y		"	"
2	Same tests, terminal conditions, and limits as for subgroup 1, except T_C = +125°C and V_{IC} tests are omitted. V_{IL} = 0.7 V, $V_{OL(max)}$ = 0.45 V.																						
3	Same tests, terminal conditions, and limits as for subgroup 1, except T_C = -55°C and V_{IC} tests are omitted.																						
7 4/	Truth	3014	58	A 2/	A 2/	A 2/	L	A 2/	A 2/	L	GND	L	A 2/	A 2/	L	A 2/	A 2/	A 2/	4.5 V	See 3/			
T_C = +25°C	table	"	59	"	A	B	L				"							B	"	"			
	test	"	60	"	B	A	H				"							"	"	"			
		"	61	B	B	A	L				"							"	"	"			
		"	62	B	A	B	H				"							"	"	"			
		"	63	A				A	B	L	"							"	"	"			
		"	64	A				B	A	H	"							"	"	"			
		"	65	B				B	A	L	"							"	"	"			
		"	66	B				A	B	H	"							"	"	"			
		"	67	A							"	L	B	A				"	"	"			
		"	68	A							"	H	A	B				"	"	"			
		"	69	B							"	L	A	B				"	"	"			
		"	70	B							"	H	B	A				"	"	"			
		"	71	A							"				L	B	A	"	"	"			
		"	72	A							"				H	A	B	"	"	"			
		"	73	B							"				L	A	B	"	"	"			
		"	74	B							"				H	B	A	"	"	"			

See footnotes at end of device type 03

TABLE III. Group A inspection for device type 03 – Continued.
Terminal conditions (pins not designated may be H ≥ 2.0 V, or L ≤ 0.8 V, or open)

Subgroup	Symbol	MIL-STD-883 method	Cases E,F	1	2	3	4	5	6	7	8	9	10	11	12	13	14	15	16	Measured terminal	Test limits		Unit
			X, 2 5/	2	3	4	5	7	8	9	10	12	13	14	15	17	18	19	20		Min	Max	
			Test no.	S	1A	1B	1Y	2A	2B	2Y	GND	3Y	3B	3A	4Y	4B	4A	G	V_{CC}				
8 4/	Same tests, terminal conditions, and limits as for subgroup 7, except T_C = +125°C and -55°C.																						
9	t_{PHL1}	3003	75	IN	GND	2.7 V	OUT				GND							GND	5.0 V	1Y	2.0	14	ns
T_C = +25°C		Fig. 6	76	"				GND	2.7 V	OUT	"							"	"	2Y	"	"	"
		"	77	"							"	OUT	2.7 V	GND				"	"	3Y	"	"	"
		"	78	"							"				OUT	2.7 V	GND	"	"	4Y	"	"	"
	t_{PLH1}	"	79	"	GND	2.7 V	OUT				"							"	"	1Y	"	"	"
		"	80	"				GND	2.7 V	OUT	"							"	"	2Y	"	"	"
		"	81	"							"	OUT	2.7 V	GND				"	"	3Y	"	"	"
		"	82	"							"				OUT	2.7 V	GND	"	"	4Y	"	"	"
	t_{PHL2}	"	83	GND	IN	GND	OUT				"							"	"	1Y	"	9.0	"
		"	84	"				IN	GND	OUT	"							"	"	2Y	"	"	"
		"	85	"							"	OUT	GND	IN				"	"	3Y	"	"	"
		"	86	"							"				OUT	GND	IN	"	"	4Y	"	"	"
	t_{PLH2}	"	87	"	IN	GND	OUT				"							"	"	1Y	"	"	"
		"	88	"				IN	GND	OUT	"							"	"	2Y	"	"	"
		"	89	"							"	OUT	GND	IN				"	"	3Y	"	"	"
		"	90	"							"				OUT	GND	IN	"	"	4Y	"	"	"
	t_{PHL3}	"	91	"	2.7 V	GND	OUT				"							IN	5.0 V	1Y	"	14	"
		"	92	"				2.7 V	GND	OUT	"							"	"	2Y	"	"	"
		"	93	"							"	OUT	GND	2.7 V				"	"	3Y	"	"	"
		"	94	"							"				OUT	GND	2.7 V	"	"	4Y	"	"	"
	t_{PLH3}	"	95	"	2.7 V	GND	OUT				"							"	"	1Y	"	13.5	"
		"	96	"				2.7 V	GND	OUT	"							"	"	2Y	"	"	"
		"	97	"							"	OUT	GND	2.7 V				"	"	3Y	"	"	"
		"	98	"							"				OUT	GND	2.7 V	"	"	4Y	"	"	"

See footnotes at end of device type 03.

TABLE III. Group A inspection for device type 03 – Continued.
Terminal conditions (pins not designated may be H ≥ 2.0 V, or L ≤ 0.8 V, or open)

Subgroup	Symbol	MIL-STD-883 method	Cases E,F	1	2	3	4	5	6	7	8	9	10	11	12	13	14	15	16	Measured terminal	Test limits		Unit
			X, 2 5/	2	3	4	5	7	8	9	10	12	13	14	15	17	18	19	20		Min	Max	
			Test no.	S	1A	1B	1Y	2A	2B	2Y	GND	3Y	3B	3A	4Y	4B	4A	G	V_{CC}				
10	t_{PHL1}	3003	99	IN	GND	2.7 V	OUT				GND							GND	5.0 V	1Y	2.0	18.5	ns
T_C = +125°C		Fig. 6	100	"				GND	2.7 V	OUT	"							"	"	2Y	"	"	"
		"	101	"							"	OUT	2.7 V	GND				"	"	3Y	"	"	"
		"	102	"							"				OUT	2.7 V	GND	"	"	4Y	"	"	"
	t_{PLH1}	"	103	"	GND	2.7 V	OUT				"							"	"	1Y	"	"	"
		"	104	"				GND	2.7 V	OUT	"							"	"	2Y	"	"	"
		"	105	"							"	OUT	2.7 V	GND				"	"	3Y	"	"	"
		"	106	"							"				OUT	2.7 V	GND	"	"	4Y	"	"	"
	t_{PHL2}	"	107	GND	IN	GND	OUT				"							"	"	1Y	"	12	"
		"	108	"				IN	GND	OUT	"							"	"	2Y	"	"	"
		"	109	"							"	OUT	GND	IN				"	"	3Y	"	"	"
		"	110	"							"				OUT	GND	IN	"	"	4Y	"	"	"
	t_{PLH2}	"	111	"	IN	GND	OUT				"							"	"	1Y	"	"	"
		"	112	"				IN	GND	OUT	"							"	"	2Y	"	"	"
		"	113	"							"	OUT	GND	IN				"	"	3Y	"	"	"
		"	114	"							"				OUT	GND	IN	"	"	4Y	"	"	"
	t_{PHL3}	"	115	"	2.7 V	GND	OUT				"							IN	"	1Y	"	18.5	"
		"	116	"				2.7 V	GND	OUT	"							"	"	2Y	"	"	"
		"	117	"							"	OUT	GND	2.7 V				"	"	3Y	"	"	"
		"	118	"							"				OUT	GND	2.7 V	"	"	4Y	"	"	"
	t_{PLH3}	"	119	"	2.7 V	GND	OUT				"							"	"	1Y	"	18	"
		"	120	"				2.7 V	GND	OUT	"							"	"	2Y	"	"	"
		"	121	"							"	OUT	GND	2.7 V				"	"	3Y	"	"	"
		"	122	"							"				OUT	GND	2.7 V	"	"	4Y	"	"	"
11	Same tests, terminal conditions, and limits as for subgroup 10, except T_C = -55°C.																						

1/ For circuit B, $I_{OS(max)}$ = -110 mA.

2/ A = 2.4 V; B = 0.4 V.

3/ H ≥ 1.5 V; L ≤ 1.5 V.

4/ Only a summary of attributes is required.

5/ Case 2 pins not designated are NC.

6/ For circuit B, 0.1/ -4 mA.

7/ For circuit B, 0.1/ -2 mA.

TABLE III. Group A inspection for device type 04
Terminal conditions (pins not designated may be H ≥ 2.0 V, or L ≤ 0.8 V, or open)

Subgroup	Symbol	MIL-STD-883 method	Cases E,F	1	2	3	4	5	6	7	8	9	10	11	12	13	14	15	16	Measured terminal	Test limits		Unit
			X, 2 5/	2	3	4	5	7	8	9	10	12	13	14	15	17	18	19	20		Min	Max	
			Test no.	S	1A	1B	1Y	2A	2B	2Y	GND	3Y	3B	3A	4Y	4B	4A	G	V_{CC}				
1	V_{OH}	3006	1				-1 mA				GND							2.0 V	4.5 V	1Y	2.5		V
T_C = +25°C		"	2							-1 mA	"							"	"	2Y	"		"
		"	3								"	-1 mA						"	"	3Y	"		"
		"	4								"				-1 mA			"	"	4Y	"		"
	V_{OL}	3007	5	2.0 V		2.0 V	20 mA				"							0.8 V	"	1Y		0.5	"
		"	6	"					2.0 V	20 mA	"							"	"	2Y		"	"
		"	7	"							"	20 mA	2.0 V					"	"	3Y		"	"
		"	8	"							"				20 mA	2.0 V		"	"	4Y		"	"
	V_{IC}		9	-18 mA							"								"	S		-1.2	"
			10		-18 mA						"								"	1A		"	"
			11			-18 mA					"								"	1B		"	"
			12					-18 mA			"								"	2A		"	"
			13						-18 mA		"								"	2B		"	"
			14								"		-18 mA						"	3B		"	"
			15								"			-18 mA					"	3A		"	"
			16								"					-18 mA			"	4B		"	"
			17								"						-18 mA		"	4A		"	"
			18								"							-18 mA	"	G		"	"
	I_{IL}	3009	19	5.5 V							"							0.5 V	5.5 V	G	-2 6/	-4 6/	mA
		"	20	0.5 V							"							5.5 V	"	S	-2 6/	-4 6/	"
		"	21	GND	0.5 V						"							GND	"	1A	-1 7/	-2 7/	"
		"	22	5.5 V		0.5 V					"							"	"	1B	" "	" "	"
		"	23	GND				0.5 V			"							"	"	2A	" "	" "	"
		"	24	5.5 V					0.5 V		"							"	"	2B	" "	" "	"
		"	25	5.5 V							"		0.5 V					"	"	3B	" "	" "	"
		"	26	GND							"			0.5 V				"	"	3A	" "	" "	"
		"	27	5.5 V							"					0.5 V		"	"	4B	" "	" "	"
		"	28	GND							"						0.5 V	"	"	4A	" "	" "	"
	I_{IH1}	3010	29	GND							"							2.7 V	"	G		100	μA
		"	30	2.7 V							"							GND	"	S		100	"
		"	31		2.7 V						"							5.5 V	"	1A		50	"
		"	32			2.7 V					"							"	"	1B		"	"
		"	33					2.7 V			"							"	"	2A		"	"
		"	34						2.7 V		"							"	"	2B		"	"
		"	35								"		2.7 V					"	"	3B		"	"
		"	36								"			2.7 V				"	"	3A		"	"
		"	37								"					2.7 V		"	"	4B		"	"
		"	38								"						2.7 V	"	"	4A		"	"

See footnotes at end of device type 04

TABLE III. Group A inspection for device type 04 – Continued.
Terminal conditions (pins not designated may be H ≥ 2.0 V, or L ≤ 0.8 V, or open)

Subgroup	Symbol	MIL-STD-883 method	Cases E,F	1	2	3	4	5	6	7	8	9	10	11	12	13	14	15	16	Measured terminal	Test limits		Unit
			X, 2 5/	2	3	4	5	7	8	9	10	12	13	14	15	17	18	19	20		Min	Max	
			Test no.	S	1A	1B	1Y	2A	2B	2Y	GND	3Y	3B	3A	4Y	4B	4A	G	V_{CC}				
1	I_{IH2}	3010	39	GND							GND							5.5 V	5.5 V	G		1.0	mA
T_C = +25°C		"	40	5.5 V							"							GND	"	S		"	"
		"	41		5.5 V						"							5.5 V	"	1A		"	"
		"	42			5.5 V					"							"	"	1B		"	"
		"	43					5.5 V			"							"	"	2A		"	"
		"	44						5.5 V		"							"	"	2B		"	"
		"	45								"		5.5 V					"	"	3B		"	"
		"	46								"			5.5 V				"	"	3A		"	"
		"	47								"					5.5 V		"	"	4B		"	"
		"	48								"						5.5 V	"	"	4A		"	"
	I_{OS}	3011	49				GND				"							"	"	1Y	-40	-100 1/	"
		"	50							GND	"							"	"	2Y	"	"	"
		"	51								"	GND						"	"	3Y	"	"	"
		"	52								"				GND			"	"	4Y	"	"	"
	I_{CC}	3005	53	5.5 V	GND	GND		GND	GND		"		GND	GND		GND	GND	"	"	V_{CC}		61	"
	I_{CEX}		54	"	"	"	5.5 V	"	"		"		"	"		"	"	"	"	1Y		250	µA
			55	"	"	"		"	"	5.5 V	"		"	"		"	"	"	"	2Y		"	"
			56	"	"	"		"	"		"	5.5 V	"	"		"	"	"	"	3Y		"	"
			57	"	"	"		"	"		"		"	"	5.5 V	"	"	"	"	4Y		"	"
2	Same tests, terminal conditions, and limits as for subgroup 1, except T_C = +125°C and V_{IC} tests are omitted. V_{IL} = 0.7 V, $V_{OL(max)}$ = 0.45 V.																						
3	Same tests, terminal conditions, and limits as for subgroup 1, except T_C = -55°C and V_{IC} tests are omitted.																						
7	Truth	3014	58	B 2/	A 2/	B 2/	L	A 2/	B 2/	L	GND	L	B 2/	A 2/	L	B 2/	A 2/	B	4.5 V	See 3/			
T_C = +25°C	table	"	59	A	B	A	L				"							"	"	"			
	test	"	60	A	A	B	H				"							"	"	"			
		"	61	B	A	B	L				"							"	"	"			
		"	62	B	B	A	H				"							"	"	"			
		"	63	A				B	A	L	"							"	"	"			
		"	64	A				A	B	H	"							"	"	"			
		"	65	B				A	B	L	"							"	"	"			
		"	66	B				B	A	H	"							"	"	"			
		"	67	A							"	L	A	B				"	"	"			
		"	68	A							"	H	B	A				"	"	"			
		"	69	B							"	L	B	A				"	"	"			
		"	70	B							"	H	A	B				"	"	"			
		"	71	A							"				L	A	B	"	"	"			
		"	72	A							"				H	B	A	"	"	"			
		"	73	B							"				L	B	A	"	"	"			
		"	74	B							"				H	A	B	"	"	"			

See footnotes at end of device type 04

TABLE III. Group A inspection for device type 04 – Continued.
Terminal conditions (pins not designated may be H ≥ 2.0 V, or L ≤ 0.8 V, or open)

Subgroup	Symbol	MIL-STD-883 method	Cases E,F	1	2	3	4	5	6	7	8	9	10	11	12	13	14	15	16	Measured terminal	Test limits		Unit
			X, 2 5/	2	3	4	5	7	8	9	10	12	13	14	15	17	18	19	20		Min	Max	
			Test no.	S	1A	1B	1Y	2A	2B	2Y	GND	3Y	3B	3A	4Y	4B	4A	G	V_{CC}				
8 4/	Same tests, terminal conditions, and limits as for subgroup 7, except T_C = +125°C and -55°C.																						
9	t_{PHL1}	3003	75	IN	GND	2.7 V	OUT				GND							GND	5.0 V	1Y	2.0	14	ns
T_C = +25°C		Fig. 6	76	"				GND	2.7 V	OUT	"							"	"	2Y	"	"	"
		"	77	"							"	OUT	2.7 V	GND				"	"	3Y	"	"	"
		"	78	"							"				OUT	2.7 V	GND	"	"	4Y	"	"	"
	t_{PLH1}	"	79	"	GND	2.7 V	OUT				"							"	"	1Y	"	"	"
		"	80	"				GND	2.7 V	OUT	"							"	"	2Y	"	"	"
		"	81	"							"	OUT	2.7 V	GND				"	"	3Y	"	"	"
		"	82	"							"				OUT	2.7 V	GND	"	"	4Y	"	"	"
	t_{PHL2}	"	83	GND	IN	GND	OUT				"							"	"	1Y	"	8.0	"
		"	84	"				IN	GND	OUT	"							"	"	2Y	"	"	"
		"	85	"							"	OUT	GND	IN				"	"	3Y	"	"	"
		"	86	"							"				OUT	GND	IN	"	"	4Y	"	"	"
	t_{PLH2}	"	87	"	IN	GND	OUT				"							"	"	1Y	"	"	"
		"	88	"				IN	GND	OUT	"							"	"	2Y	"	"	"
		"	89	"							"	OUT	GND	IN				"	"	3Y	"	"	"
		"	90	"							"				OUT	GND	IN	"	"	4Y	"	"	"
	t_{PHL3}	"	91	"	2.7 V	GND	OUT				"							IN	"	1Y	"	14	"
		"	92	"				2.7 V	GND	OUT	"							"	"	2Y	"	"	"
		"	93	"							"	OUT	GND	2.7 V				"	"	3Y	"	"	"
		"	94	"							"				OUT	GND	2.7 V	"	"	4Y	"	"	"
	t_{PLH3}	"	95	"	2.7 V	GND	OUT				"							"	"	1Y	"	13.5	"
		"	96	"				2.7 V	GND	OUT	"							"	"	2Y	"	"	"
		"	97	"							"	OUT	GND	2.7 V				"	"	3Y	"	"	"
		"	98	"							"				OUT	GND	2.7 V	"	"	4Y	"	"	"
10	t_{PHL1}	"	99	IN	GND	2.7 V	OUT				"							GND	"	1Y	"	18.5	"
T_C = +125°C		"	100	"				GND	2.7 V	OUT	"							"	"	2Y	"	"	"
		"	101	"							"	OUT	2.7 V	GND				"	"	3Y	"	"	"
		"	102	"							"				OUT	2.7 V	GND	"	"	4Y	"	"	"

See footnotes at end of device type 04.

TABLE III. Group A inspection for device type 04 – Continued.
Terminal conditions (pins not designated may be H ≥ 2.0 V, or L ≤ 0.8 V, or open)

Subgroup	Symbol	MIL-STD-883 method	Cases E,F	1	2	3	4	5	6	7	8	9	10	11	12	13	14	15	16	Measured terminal	Test limits		Unit
			X, 2 5/	2	3	4	5	7	8	9	10	12	13	14	15	17	18	19	20		Min	Max	
			Test no.	S	1A	1B	1Y	2A	2B	2Y	GND	3Y	3B	3A	4Y	4B	4A	G	V_{CC}				
10	t_{PLH1}	3003	103	IN	GND	2.7 V	OUT				GND							GND	5.0 V	1Y	2.0	18.5	ns
T_C = +125°C		Fig. 6	104	"				GND	2.7 V	OUT	"							"	"	2Y	"	"	"
		"	105	"							"	OUT	2.7 V	GND				"	"	3Y	"	"	"
		"	106	"							"				OUT	2.7 V	GND	"	"	4Y	"	"	"
	t_{PHL2}	"	107	GND	IN	GND	OUT				"							"	"	1Y	"	11	"
		"	108	"				IN	GND	OUT	"							"	"	2Y	"	"	"
		"	109	"							"	OUT	GND	IN				"	"	3Y	"	"	"
		"	110	"							"				OUT	GND	IN	"	"	4Y	"	"	"
	t_{PLH2}	"	111	"	IN	GND	OUT				"							"	"	1Y	"	"	"
		"	112	"				IN	GND	OUT	"							"	"	2Y	"	"	"
		"	113	"							"	OUT	GND	IN				"	"	3Y	"	"	"
		"	114	"							"				OUT	GND	IN	"	"	4Y	"	"	"
	t_{PHL3}	"	115	"	2.7 V	GND	OUT				"							IN	"	1Y	"	18.5	"
		"	116	"				2.7 V	GND	OUT	"							"	"	2Y	"	"	"
		"	117	"							"	OUT	GND	2.7 V				"	"	3Y	"	"	"
		"	118	"							"				OUT	GND	2.7 V	"	"	4Y	"	"	"
	t_{PLH3}	"	119	"	2.7 V	GND	OUT				"							"	"	1Y	"	18	"
		"	120	"				2.7 V	GND	OUT	"							"	"	2Y	"	"	"
		"	121	"							"	OUT	GND	2.7 V				"	"	3Y	"	"	"
		"	122	"							"				OUT	GND	2.7 V	"	"	4Y	"	"	"
11	Same tests, terminal conditions, and limits as for subgroup 10, except T_C = -55°C.																						

1/ For circuit B, $I_{OS(max)}$ = -110 mA.

2/ A = 2.4 V; B = 0.4 V.

3/ H ≥ 1.5 V; L ≤ 1.5 V.

4/ Only a summary of attributes is required.

5/ Case 2 pins not designated are NC.

6/ For circuit B, 0.1/ -4 mA.

7/ For circuit B, 0.1/ -2 mA.

TABLE III. Group A inspection for device type 05.
Terminal conditions (pins not designated may be H ≥ 2.0 V, or L ≤ 0.8 V, or open)

Subgroup	Symbol	MIL-STD-883 method	Cases E,F	1	2	3	4	5	6	7	8	9	10	11	12	13	14	15	16	Measured terminal	Test limits		Unit
			X, 2 5/	2	3	4	5	7	8	9	10	12	13	14	15	17	18	19	20		Min	Max	
			Test no.	D3	D2	D1	D0	Y	W	ST	GND	C	B	A	D7	D6	D5	D4	V_{CC}				
1	V_{OL}	3007	1				2.0 V		20 mA	0.8 V	GND	0.8 V	0.8 V	0.8 V					4.5 V	W		0.5	V
T_C = +25°C		3007	2					20 mA		"	“	2.0 V	2.0 V	2.0 V	0.8 V				“	Y		0.5	“
	V_{OH}	3006	3						-2 mA	"	“	2.0 V	2.0 V	2.0 V	0.8 V				“	W	2.4		“
		3006	4				2.0 V	-2 mA		"	“	0.8 V	0.8 V	0.8 V					“	Y	2.4		“
	I_{OFF1}		5						2.7 V	2.0 V	“								5.5 V	W		50	µA
			6					2.7 V		"	“								“	Y		50	“
	I_{OFF2}		7						0.5 V	"	“								“	W		-50	"
			8					0.5 V		"	“								“	Y		-50	“
	I_{OS}	3011	9						GND	GND	“	5.5 V	5.5 V	5.5 V	GND				“	W	-40	-100 1/	mA
		3011	10				5.5 V	GND		GND	“	GND	GND	GND					“	Y	-40	-100 1/	“
	I_{IH1}	3010	11	2.7 V						5.5 V	“	5.5 V	"	GND					“	D3		50	µA
		"	12		2.7 V					"	“	"	"	5.5 V					“	D2		“	“
		"	13			2.7 V				"	“	"	5.5 V	GND					“	D1		“	“
		"	14				2.7 V			"	“	"	5.5 V	5.5 V					“	D0		“	“
		"	15							2.7 V	“								“	ST		“	“
		"	16								“	2.7 V							“	C		“	“
		"	17								“		2.7 V						"	B		"	"
		“	18								“			2.7 V					“	A		“	“
		“	19							5.5 V	“	GND	GND	GND	2.7 V				“	D7		“	"
		“	20							"	“	"	GND	5.5 V		2.7 V			“	D6		“	“
		“	21							"	“	"	5.5 V	GND			2.7 V		“	D5		“	“
		“	22							"	“	"	5.5 V	5.5 V				2.7 V	“	D4		“	“
	I_{IH2}	“	23	5.5 V						"	“	5.5 V	GND	GND					“	D3		1.0	mA
		“	24		5.5 V					"	“	"	GND	5.5 V					“	D2		“	“
		“	25			5.5 V				"	“	"	5.5 V	GND					“	D1		“	“
		“	26				5.5 V			"	“	"	5.5 V	5.5 V					“	D0		“	“
		“	27							"	“								“	ST		“	“
		“	28								“	5.5 V							“	C		“	“
			29								“		5.5 V						“	B		"	"
		“	30								“			5.5 V					“	A		“	“
		"	31							5.5 V	“	GND	GND	GND	5.5 V				“	D7		“	“
		“	32							"	“	"	GND	5.5 V		5.5 V			“	D6		“	“
		“	33							"	“	"	5.5 V	GND			5.5 V		“	D5		“	“
		“	34							"	“	"	"	5.5 V				5.5 V	“	D4		“	“

See footnotes at end of device type 05.

TABLE III. Group A inspection for device type 05 – Continued.
Terminal conditions (pins not designated may be H ≥ 2.0 V, or L ≤ 0.8 V, or open)

Subgroup	Symbol	MIL-STD-883 method	Cases E,F	1	2	3	4	5	6	7	8	9	10	11	12	13	14	15	16	Measured terminal	Test limits		Unit
			X, 2 5/	2	3	4	5	7	8	9	10	12	13	14	15	17	18	19	20		Min	Max	
			Test no.	D3	D2	D1	D0	Y	W	ST	GND	C	B	A	D7	D6	D5	D4	V_{CC}				
1	I_{IL}	3009	35	0.5 V						GND	GND	GND	5.5 V	5.5 V					5.5 V	D3	-1	-2	mA
T_C = +25°C		"	36		0.5 V					"	"	"	"	GND					"	D2	"	"	"
		"	37			0.5 V				"	"	"	GND	5.5 V					"	D1	"	"	"
		"	38				0.5 V			"	"	"	GND	GND					"	D0	"	"	"
		"	39							0.5 V	"								"	ST	"	"	"
		"	40								"	0.5 V							"	C	"	"	"
		"	41								"		0.5 V						"	B	"	"	"
		"	42								"			0.5 V					"	A	"	"	"
		"	43							GND	"	5.5 V	5.5 V	5.5 V	0.5 V				"	D7	"	"	"
		"	44							"	"	"	5.5 V	GND		0.5 V			"	D6	"	"	"
		"	45							"	"	"	GND	5.5 V			0.5 V		"	D5	"	"	"
		"	46							"	"	"	GND	GND				0.5 V	"	D4	"	"	"
	I_{CCO}	3005	47	5.5 V	5.5 V	5.5 V	5.5 V			5.5 V	"	"	5.5 V	5.5 V	5.5 V	5.5 V	5.5 V	5.5 V	"	V_{CC}		85	"
	I_{CEX}		48						5.5 V		"	"	5.5 V	5.5 V	GND				"	W		250	μA
			49				5.5 V	5.5 V		GND	"	GND	GND	GND					"	Y		250	μA
	V_{IC}		50	-18 mA							"								4.5 V	D3		-1.2	V
			51		-18 mA						"								"	D2		"	"
			52			-18 mA					"								"	D1		"	"
			53				-18 mA				"								"	D0		"	"
			54							-18 mA	"								"	ST		"	"
			55								"	-18 mA							"	C		"	"
			56								"		-18 mA						"	B		"	"
			57								"			-18 mA					"	A		"	"
			58								"				-18 mA				"	D7		"	"
			59								"					-18 mA			"	D6		"	"
			60								"						-18 mA		"	D5		"	"
			61								"							-18 mA	"	D4		"	"
2	Same tests, terminal conditions, and limits as for subgroup 1, except T_C = +125°C and V_{IC} tests are omitted. V_{IL} = 0.7 V, $V_{OL(max)}$ = 0.45 V.																						
3	Same tests, terminal conditions, and limits as for subgroup 1, except T_C = -55°C and V_{IC} tests are omitted.																						
7	Truth	3014	62	A 2/	A 2/	A 2/	B 2/	L	H	B 2/	GND	B 2/	B 2/	B 2/	A 2/	A 2/	A 2/	A 2/	4.5 V	3/			
T_C = +25°C	table	"	63	B	B	B	A	H	L	"	"	"	"	B	B	B	B	B	"	"			
	test	"	64	A	A	B	A	L	H	"	"	"	"	A	A	A	A	A	"	"			
		"	65	B	B	A	B	H	L	"	"	"	"	A	B	B	B	B	"	"			
		"	66	A	B	A	A	L	H	"	"	"	A	B	A	A	A	A	"	"			
		"	67	B	A	B	B	H	L	"	"	"	"	B	B	B	B	B	"	"			
		"	68	B	A	A	A	L	H	"	"	"	"	A	A	A	A	A	"	"			
		"	69	A	B	B	B	H	L	"	"	"	"	A	B	B	B	B	"	"			
		"	70	A	A	A	A	L	H	"	"	A	B	B	A	A	A	B	"	"			
		"	71	B	B	B	B	H	L	"	"	"	"	B	B	B	B	A	"	"			
		"	72	A	A	A	A	L	H	"	"	"	"	A	A	A	B	A	"	"			
		"	73	B	B	B	B	H	L	"	"	"	"	A	B	B	A	B	"	"			
		"	74	A	A	A	A	L	H	"	"	"	A	B	A	B	A	A	"	"			
		"	75	B	B	B	B	H	L	"	"	"	"	B	B	A	B	B	"	"			
		"	76	A	A	A	A	L	H	"	"	"	"	A	B	A	A	A	"	"			
		"	77	B	B	B	B	H	L	"	"	"	"	A	A	B	B	B	"	"			

See footnotes at end of device type 05.

TABLE III. Group A inspection for device type 05 – Continued.
Terminal conditions (pins not designated may be H ≥ 2.0 V, or L ≤ 0.8 V, or open)

Subgroup	Symbol	MIL-STD-883 method	Cases E,F	1	2	3	4	5	6	7	8	9	10	11	12	13	14	15	16	Measured terminal	Test limits		Unit
			X, 2 5/	2	3	4	5	7	8	9	10	12	13	14	15	17	18	19	20		Min	Max	
			Test no.	D3	D2	D1	D0	Y	W	ST	GND	C	B	A	D7	D6	D5	D4	V_{CC}				
8	Repeat subgroup 7 at T_C = +125°C and -55°C.																						
9	t_{PHL1}	3003	78			2.7 V	GND		OUT	GND	GND	GND	GND	IN					5.0 V	W	2.0	15.5	ns
T_C = +25°C		Fig. 8	79		2.7 V		"		"	"	"	GND	IN	GND					"	"	"	"	"
		"	80				"		"	"	"	IN	GND	GND				2.7 V	"	"	"	"	"
	t_{PLH1}	"	81			2.7 V	"		"	"	"	GND	GND	IN					"	"	"	17.0	"
		"	82		2.7 V		"		"	"	"	GND	IN	GND					"	"	"	"	"
		"	83				"		"	"	"	IN	GND	GND				2.7 V	"	"	"	"	"
	t_{PHL2}	"	84			2.7 V	"	OUT		"	"	GND	GND	IN					"	Y	"	21.5	"
		"	85		2.7 V		"	"		"	"	GND	IN	GND					"	"	"	"	"
		"	86				"	"		"	"	IN	GND	GND				2.7 V	"	"	"	"	"
	t_{PLH2}	"	87			2.7 V	"	"		"	"	GND	GND	IN					"	"	"	20.0	"
		"	88		2.7 V		"	"		"	"	GND	IN	GND					"	"	"	"	"
		"	89				"	"		"	"	IN	GND	GND				2.7 V	"	"	"	"	"
	t_{PHL3}	"	90				IN		OUT	"	"	GND	GND	GND					"	W	"	9.0	"
		"	91			IN			"	"	"	"	GND	2.7 V					"	"	"	"	"
		"	92		IN				"	"	"	"	2.7 V	GND					"	"	"	"	"
		"	93	IN					"	"	"	"	2.7 V	2.7 V					"	"	"	"	"
		"	94						"	"	"	2.7 V	GND	GND				IN	"	"	"	"	"
		"	95						"	"	"	"	GND	2.7 V			IN		"	"	"	"	"
		"	96						"	"	"	"	2.7 V	GND		IN			"	"	"	"	"
		"	97						"	"	"	"	2.7 V	2.7 V	IN				"	"	"	"	"
	t_{PLH3}	"	98				IN		"	"	"	GND	GND	GND					"	"	"	"	"
		"	99			IN			"	"	"	"	GND	2.7 V					"	"	"	"	"
		"	100		IN				"	"	"	"	2.7 V	GND					"	"	"	"	"
		"	101	IN					"	"	"	"	2.7 V	2.7 V					"	"	"	"	"
		"	102						"	"	"	2.7 V	GND	GND				IN	"	"	"	"	"
		"	103						"	"	"	"	GND	2.7 V			IN		"	"	"	"	"
		"	104						"	"	"	"	2.7 V	GND		IN			"	"	"	"	"
		"	105						"	"	"	"	2.7 V	2.7 V	IN				"	"	"	"	"
	$t_{PHI\ 4}$	"	106				IN	OUT		"	"	GND	GND	GND					"	Y	"	14.0	"
		"	107			IN		"		"	"	"	GND	2.7 V					"	"	"	"	"
		"	108		IN			"		"	"	"	2.7 V	GND					"	"	"	"	"
		"	109	IN				"		"	"	"	2.7 V	2.7 V					"	"	"	"	"
		"	110					"		"	"	2.7 V	GND	GND				IN	"	"	"	"	"
		"	111					"		"	"	"	GND	2.7 V			IN		"	"	"	"	"
		"	112					"		"	"	"	2.7 V	GND		IN			"	"	"	"	"
		"	113					"		"	"	"	2.7 V	2.7 V	IN				"	"	"	"	"

See footnotes at end of device type 05

TABLE III. Group A inspection for device type 05 – Continued.
Terminal conditions (pins not designated may be H ≥ 2.0 V, or L ≤ 0.8 V, or open)

Subgroup	Symbol	MIL-STD-883 method	Cases E,F	1	2	3	4	5	6	7	8	9	10	11	12	13	14	15	16	Measured terminal	Test limits		Unit
			X, 2 5/	2	3	4	5	7	8	9	10	12	13	14	15	17	18	19	20		Min	Max	
			Test no.	D3	D2	D1	D0	Y	W	ST	GND	C	B	A	D7	D6	D5	D4	V_{CC}				
9	t_{PLH4}	3003	114				IN	OUT		GND	GND	GND	GND	GND					5.0 V	Y	2.0	14.0	ns
T_C = +25°C		Fig. 8	115			IN		"		"	"	"	GND	2.7 V					"	"	"	"	"
		"	116		IN			"		"	"	"	2.7 V	GND					"	"	"	"	"
		"	117	IN				"		"	"	"	2.7 V	2.7 V					"	"	"	"	"
		"	118					"		"	"	2.7 V	GND	GND				IN	"	"	"	"	"
		"	119					"		"	"	"	GND	2.7 V			IN		"	"	"	"	"
		"	120					"		"	"	"	2.7 V	GND		IN			"	"	"	"	"
		"	121					"		"	"	"	2.7 V	2.7 V	IN				"	"	"	"	"
	t_{ZH}	"	122				GND		OUT	IN	"	GND	GND	GND					"	W	"	19.5	"
	t_{ZL}	"	123				2.7 V		"	"	"	"	"	"					"	"	"	21	"
	t_{HZ}	"	124				GND		"	"	"	"	"	"					"	"	"	21	"
	t_{LZ}	"	125				2.7 V		"	"	"	"	"	"					"	"	"	17	"
	t_{ZH}	"	126				2.7 V	OUT		"	"	"	"	"					"	Y	"	19.5	"
	t_{ZL}	"	127				GND	"		"	"	"	"	"					"	"	"	21	"
	t_{HZ}	"	128				2.7 V	"		"	"	"	"	"					"	"	"	21	"
	t_{LZ}	"	129				GND	"		"	"	"	"	"					"	"	"	17	"
10	t_{PHL1}	"	130			2.7 V	GND		OUT	GND	"	GND	GND	IN					"	W	"	20	"
T_C = +125°C		"	131		2.7 V				"	"	"	GND	IN	GND					"	"	"	"	"
		"	132						"	"	"	IN	GND	GND				2.7 V	"	"	"	"	"
	t_{PLH1}	"	133			2.7 V			"	"	"	GND	GND	IN					"	"	"	22	"
		"	134		2.7 V				"	"	"	GND	IN	GND					"	"	"	"	"
		"	135						"	"	"	IN	GND	GND				2.7 V	"	"	"	"	"
	t_{PHL2}	"	136			2.7 V		OUT		"	"	GND	GND	IN					"	Y	"	28	"
		"	137		2.7 V			"		"	"	GND	IN	GND					"	"	"	"	"
		"	138					"		"	"	IN	GND	GND				2.7 V	"	"	"	"	"
	t_{PLH2}	"	139			2.7 V		"		"	"	GND	GND	IN					"	"	"	26	"
		"	140		2.7 V			"		"	"	GND	IN	GND					"	"	"	"	"
		"	141				GND	"		"	"	IN	GND	GND				2.7 V	"	"	"	"	"

See footnotes at end of device type 05

TABLE III. Group A inspection for device type 05 – Continued.
Terminal conditions (pins not designated may be H ≥ 2.0 V, or L ≤ 0.8 V, or open)

Subgroup	Symbol	MIL-STD-883 method	Cases E,F	1	2	3	4	5	6	7	8	9	10	11	12	13	14	15	16	Measured terminal	Test limits		Unit
			X, 2 5/	2	3	4	5	7	8	9	10	12	13	14	15	17	18	19	20		Min	Max	
			Test no.	D3	D2	D1	D0	Y	W	ST	GND	C	B	A	D7	D6	D5	D4	V_{CC}				
10 T_C = +125°C	t_{PHL3}	3003 Fig. 8	142				IN		OUT	GND	GND	GND	GND	GND					5.0 V	W	2.0	11.5	ns
		"	143			IN			"	"	"	"	GND	2.7 V					"	"	"	"	"
		"	144		IN				"	"	"	"	2.7 V	GND					"	"	"	"	"
		"	145	IN					"	"	"	"	2.7 V	2.7 V					"	"	"	"	"
		"	146						"	"	"	2.7 V	GND	GND				IN	"	"	"	"	"
		"	147						"	"	"	"	GND	2.7 V			IN		"	"	"	"	"
		"	148						"	"	"	"	2.7 V	GND		IN			"	"	"	"	"
		"	149						"	"	"	"	2.7 V	2.7 V	IN				"	"	"	"	"
	t_{PLH3}	"	150				IN		"	"	"	GND	GND	GND					"	"	"	"	"
		"	151			IN			"	"	"	"	GND	2.7 V					"	"	"	"	"
		"	152		IN				"	"	"	"	2.7 V	GND					"	"	"	"	"
		"	153	IN					"	"	"	"	2.7 V	2.7 V					"	"	"	"	"
		"	154						"	"	"	2.7 V	GND	GND				IN	"	"	"	"	"
		"	155						"	"	"	"	GND	2.7 V			IN		"	"	"	"	"
		"	156						"	"	"	"	2.7 V	GND		IN			"	"	"	"	"
		"	157						"	"	"	"	2.7 V	2.7 V	IN				"	"	"	"	"
	t_{PHL4}	"	158				IN	OUT		"	"	GND	GND	GND					"	Y	"	18	"
		"	159			IN		"		"	"	"	GND	2.7 V					"	"	"	"	"
		"	160		IN			"		"	"	"	2.7 V	GND					"	"	"	"	"
		"	161	IN				"		"	"	"	2.7 V	2.7 V					"	"	"	"	"
		"	162					"		"	"	2.7 V	GND	GND				IN	"	"	"	"	"
		"	163					"		"	"	"	GND	2.7 V			IN		"	"	"	"	"
		"	164					"		"	"	"	2.7 V	GND		IN			"	"	"	"	"
		"	165					"		"	"	"	2.7 V	2.7 V	IN				"	"	"	"	"
	t_{PLH4}	"	166				IN	"		"	"	GND	GND	GND					"	"	"	"	"
		"	167			IN		"		"	"	"	GND	2.7 V					"	"	"	"	"
		"	168		IN			"		"	"	"	2.7 V	GND					"	"	"	"	"
		"	169	IN				"		"	"	"	2.7 V	2.7 V					"	"	"	"	"
		"	170					"		"	"	2.7 V	GND	GND				IN	"	"	"	"	"
		"	171					"		"	"	"	GND	2.7 V			IN		"	"	"	"	"
		"	172					"		"	"	"	2.7 V	GND		IN			"	"	"	"	"
		"	173					"		"	"	"	2.7 V	2.7 V	IN				"	"	"	"	"
	t_{ZH1}	"	174				GND		OUT	IN	"	GND	GND	GND					"	W	"	25.5	"
	t_{ZL1}	"	175				2.7 V		"	"	"	"	"	"					"	"	"	27.5	"
	t_{HZ2}	"	176				GND		"	"	"	"	"	"					"	"	"	24	"
	t_{LZ2}	"	177				2.7 V		"	"	"	"	"	"					"	"	"	22	"
	t_{ZH3}	"	178				2.7 V	OUT		"	"	"	"	"					"	Y	"	25.5	"

See footnotes at end of device type 05

TABLE III. Group A inspection for device type 05 – Continued.
Terminal conditions (pins not designated may be H ≥ 2.0 V, or L ≤ 0.8 V, or open)

Subgroup	Symbol	MIL-STD-883 method	Cases E,F	1	2	3	4	5	6	7	8	9	10	11	12	13	14	15	16	Measured terminal	Test limits		Unit
			X, 2 5/	2	3	4	5	7	8	9	10	12	13	14	15	17	18	19	20		Min	Max	
			Test no.	D3	D2	D1	D0	Y	W	ST	GND	C	B	A	D7	D6	D5	D4	V_{CC}				
10	t_{ZL3}	3003 Fig. 8	179				GND	OUT		IN	GND	GND	GND	GND					5.0 V	Y	2.0	27.5	ns
T_C = +125°C	t_{HZ4}	"	180				2.7 V	"		"	"	"	"	"					"	"	"	24	"
	t_{LZ4}	"	181				GND	"		"	"	"	"	"					"	"	"	22	"
11	Same tests, terminal conditions, and limits as for subgroup 10, except T_C = -55°C.																						

1/ For circuit B, $I_{OS(max)}$ = -110 mA.

2/ A = 2.4 V; B = 0.4 V.

3/ H ≥ 1.5 V; L ≤ 1.5 V.

4/ Only a summary of attributes is required.

5/ Case 2 pins not designated are NC.

TABLE III. Group A inspection for device type 06

Terminal conditions (pins not designated may be H ≥ 2.0 V, or L ≤ 0.8 V, or open)

Subgroup	Symbol	MIL-STD-883 method	Cases E,F	1	2	3	4	5	6	7	8	9	10	11	12	13	14	15	16	Measured terminal	Test limits		Unit
			X, 2 7/	2	3	4	5	7	8	9	10	12	13	14	15	17	18	19	20		Min	Max	
			Test no.	S	1A	1B	1Y	2A	2B	2Y	GND	3Y	3B	3A	4Y	4B	4A	0E	V_{CC}				
1	V_{OH}	3006	1	2.0 V		2.0 V	-2 mA				GND							0.8 V	4.5 V	1Y	2.4		V
T_C = +25°C		"	2	"					2.0 V	-2 mA	"							"	"	2Y	"		"
		"	3	"							"	-2 mA	2.0 V					"	"	3Y	"		"
		"	4	"							"				-2 mA	2.0 V		"	"	4Y	"		"
	V_{OL}	3007	5	0.8 V	0.8 V		20 mA				"							"	"	1Y		0.5	"
		"	6	"				0.8 V		20 mA	"							"	"	2Y		"	"
		"	7	"							"	20 mA		0.8 V				"	"	3Y		"	"
		"	8	"							"				20 mA		0.8 V	"	"	4Y		"	"
	I_{OFF1}		9	GND	GND		2.7 V				"							2.0 V	5.5 V	1Y		50	μA
			10	"				GND		2.7 V	"							"	"	2Y		"	"
			11	"							"	2.7 V		GND				"	"	3Y		"	"
			12	"							"				2.7 V		GND	"	"	4Y		"	"
	I_{OFF2}		13	5.5 V		5.5 V	0.5 V				"							"	"	1Y		-50	"
			14	"					5.5 V	0.5 V	"							"	"	2Y		"	"
			15	"							"	0.5 V	5.5 V					"	"	3Y		"	"
			16	"							"				0.5 V	5.5 V		"	"	4Y		"	"
	I_{CEX}		17	5.5 V		5.5 V	5.5 V				"							GND	"	1Y		250	"
			18	"					5.5 V	5.5 V	"							"	"	2Y		"	"
			19	"							"	5.5 V	5.5 V					"	"	3Y		"	"
			20	"							"				5.5 V	5.5 V		"	"	4Y		"	"
	I_{IL}	3009	21	0.5 V							"								"	S	-2.0 8/	-4.0 8/	mA
		"	22	GND							"							0.5 V	"	0E	-1.0 9/	-2.0 9/	"
		"	23	GND	0.5 V						"								"	1A	"	"	"
		"	24	5.5 V		0.5 V					"								"	1B	"	"	"
		"	25	GND				0.5 V			"								"	2A	"	"	"
		"	26	5.5 V					0.5 V		"								"	2B	"	"	"
		"	27	5.5 V							"		0.5 V						"	3B	"	"	"
		"	28	GND							"			0.5 V					"	3A	"	"	"
		"	29	5.5 V							"					0.5 V			"	4B	"	"	"
		"	30	GND							"						0.5 V		"	4A	"	"	"
	I_{IH1}	3010	31	2.7 V							"								"	S		100	μA
		"	32	5.5 V							"							2.7 V	"	0E		50	"
		"	33	5.5 V	2.7 V						"								"	1A		"	"
		"	34	GND		2.7 V					"								"	1B		"	"
		"	35	5.5 V				2.7 V			"								"	2A		"	"
		"	36	GND					2.7 V		"								"	2B		"	"
		"	37	GND							"		2.7 V						"	3B		"	"
		"	38	5.5 V							"			2.7 V					"	3A		"	"
		"	39	GND							"					2.7 V			"	4B		"	"
		"	40	5.5 V							"						2.7 V		"	4A		"	"

See footnotes at end of device type 06

TABLE III. Group A inspection for device type 06 – Continued.
Terminal conditions (pins not designated may be H ≥ 2.0 V, or L ≤ 0.8 V, or open)

Subgroup	Symbol	MIL-STD-883 method	Cases E,F	1	2	3	4	5	6	7	8	9	10	11	12	13	14	15	16	Measured terminal	Test limits		Unit
			X, 2 7/	2	3	4	5	7	8	9	10	12	13	14	15	17	18	19	20		Min	Max	
			Test no.	S	1A	1B	1Y	2A	2B	2Y	GND	3Y	3B	3A	4Y	4B	4A	0E	V_{CC}				
1	I_{IH2}	3010	41	5.5 V							GND								5.5 V	S		1.0	mA
T_C = +25°C		"	42	5.5 V							"							5.5 V	"	0E		"	"
		"	43	5.5 V	5.5 V						"								"	1A		"	"
		"	44	GND		5.5 V					"								"	1B		"	"
		"	45	5.5 V				5.5 V			"								"	2A		"	"
		"	46	GND					5.5 V		"								"	2B		"	"
		"	47	GND							"		5.5 V						"	3B		"	"
		"	48	5.5 V							"			5.5 V					"	3A		"	"
		"	49	GND							"					5.5 V			"	4B		"	"
		"	50	5.5 V							"						5.5 V		"	4A		"	"
	I_{OS}	3011	51	"		5.5 V	GND				"							GND	"	1Y	-40	-100 1/	"
		"	52	"					5.5 V	GND	"							"	"	2Y	"	"	"
		"	53	"							"	GND	5.5 V					"	"	3Y	"	"	"
		"	54	"							"				GND	5.5 V		"	"	4Y	"	"	"
	I_{CCH}	3005	55	"	GND	5.5 V		GND	5.5 V		"		5.5 V	GND		5.5 V	GND	"	"	V_{CC}		68	"
	I_{CCL}	"	56	GND	GND	GND		GND	GND		"		GND	GND		GND	GND	"	"	V_{CC}		93	"
	I_{CCO}	"	57	GND	GND	GND		GND	GND		"		GND	GND		GND	GND	5.5 V	"	V_{CC}		99	"
	V_{IC}		58	-18 mA							"								4.5 V	S		-1.2	V
			59		-18 mA						"								"	1A		"	"
			60			-18 mA					"								"	1B		"	"
			61					-18 mA			"								"	2A		"	"
			62						-18 mA		"								"	2B		"	"
			63								"		-18 mA						"	3B		"	"
			64								"			-18 mA					"	3A		"	"
			65								"					-18 mA			"	4B		"	"
			66								"						-18 mA		"	4A		"	"
			67								"							-18 mA	"	0E		"	"
2	Same tests, terminal conditions, and limits as for subgroup 1, except T_C = +125°C and V_{IC} tests are omitted. V_{IL} = 0.7 V, $V_{OL(max)}$ = 0.45 V.																						
3	Same tests, terminal conditions, and limits as for subgroup 1, except T_C = -55°C and V_{IC} tests are omitted.																						

See footnotes at end of device type 06

TABLE III. Group A inspection for device type 06 – Continued.
Terminal conditions (pins not designated may be H ≥ 2.0 V, or L ≤ 0.8 V, or open)

Subgroup	Symbol	MIL-STD-883 method	Cases E,F	1	2	3	4	5	6	7	8	9	10	11	12	13	14	15	16	Measured terminal	Test limits		Unit
			X, 2 7/	2	3	4	5	7	8	9	10	12	13	14	15	17	18	19	20		Min	Max	
			Test no.	S	1A	1B	1Y	2A	2B	2Y	GND	3Y	3B	3A	4Y	4B	4A	0E	V_{CC}				
7	Truth	3014	68	A 2/	A 2/	B 2/	L				GND							B 2/	4.5 V	See 3/			
T_C = +25°C	table	"	69	A	B	A	H				"							"	"	"			
	test	"	70	B	B	A	L				"							"	"	"			
		"	71	B	A	B	H				"							"	"	"			
		"	72	A				A	B	L	"							"	"	"			
		"	73	A				B	A	H	"							"	"	"			
		"	74	B				B	A	L	"							"	"	"			
		"	75	B				A	B	H	"							"	"	"			
		"	76	A							"	L	B	A				"	"	"			
		"	77	A							"	H	A	B				"	"	"			
		"	78	B							"	L	A	B				"	"	"			
		"	79	B							"	H	B	A				"	"	"			
		"	80	A							"				L	B	A	"	"	"			
		"	81	A							"				H	A	B	"	"	"			
		"	82	B							"				L	A	B	"	"	"			
		"	83	B							"				H	B	A	"	"	"			
8	Same tests, terminal conditions, and limits as for subgroup 7, except T_C = +125°C and -55°C.																						
9	t_{PHL1}	3003	84	IN	GND	2.7 V	OUT				GND							GND	5.0 V	1Y	2.0	17	ns
T_C = +25°C		Fig. 9	85	"				GND	2.7 V	OUT	"							"	"	2Y	"	"	"
		"	86	"							"	OUT	2.7 V	GND				"	"	3Y	"	"	"
		"	87	"							"				OUT	2.7 V	GND	"	"	4Y	"	"	"
	t_{PLH1}	"	88	IN	GND	2.7 V	OUT				"							"	"	1Y	"	"	"
		"	89	"				GND	2.7 V	OUT	"							"	"	2Y	"	"	"
		"	90	"							"	OUT	2.7 V	GND				"	"	3Y	"	"	"
		"	91	"							"				OUT	2.7 V	GND	"	"	4Y	"	"	"

See footnotes at end of device type 06

TABLE III. Group A inspection for device type 06 – Continued.
Terminal conditions (pins not designated may be H ≥ 2.0 V, or L ≤ 0.8 V, or open)

Subgroup	Symbol	MIL-STD-883 method	Cases E,F	1	2	3	4	5	6	7	8	9	10	11	12	13	14	15	16	Measured terminal	Test limits		Unit
			X, 2 7/	2	3	4	5	7	8	9	10	12	13	14	15	17	18	19	20		Min	Max	
			Test no.	S	1A	1B	1Y	2A	2B	2Y	GND	3Y	3B	3A	4Y	4B	4A	0E	V_{CC}				
9	t_{PHL2}	3003	92	GND	IN	GND	OUT				GND							GND	5.0 V	1Y	2.0	8.0	ns
T_C = +25°C		Fig. 9	93	"				IN	GND	OUT	"							"	"	2Y	"	"	"
		"	94	"							"	OUT	GND	IN				"	"	3Y	"	"	"
		"	95	"							"				OUT	GND	IN	"	"	4Y	"	"	"
	t_{PLH2}	"	96	"	IN	GND	OUT				"							"	"	1Y	"	9.0	"
		"	97	"				IN	GND	OUT	"							"	"	2Y	"	"	"
		"	98	"							"	OUT	GND	IN				"	"	3Y	"	"	"
		"	99	"							"				OUT	GND	IN	"	"	4Y	"	"	"
	t_{ZH}	"	100	2.7 V		2.7 V	OUT				"							IN	"	1Y	"	21.5	"
		"	101	"					2.7 V	OUT	"							"	"	2Y	"	"	"
		"	102	"							"	OUT	2.7 V					"	"	3Y	"	"	"
		"	103	"							"				OUT	2.7 V		"	"	4Y	"	"	"
	t_{ZL}	"	104	GND	GND		OUT				"							"	"	1Y	"	23	"
		"	105	"				GND		OUT	"							"	"	2Y	"	"	"
		"	106	"							"	OUT		GND				"	"	3Y	"	"	"
		"	107	"							"				OUT		GND	"	"	4Y	"	"	"
	t_{HZ} 5/	"	108	2.7 V		2.7 V	OUT				"							"	"	1Y	"	11.5	"
		"	109	"					2.7 V	OUT	"							"	"	2Y	"	"	"
		"	110	"							"	OUT	2.7 V					"	"	3Y	"	"	"
		"	111	"							"				OUT	2.7 V		"	"	4Y	"	"	"
	t_{LZ}	"	112	GND	GND		OUT				"							"	"	1Y	"	17	"
		"	113	"				GND		OUT	"							"	"	2Y	"	"	"
		"	114	"							"	OUT		GND				"	"	3Y	"	"	"
		"	115	"							"				OUT		GND	"	"	4Y	"	"	"
10	t_{PHL1}	"	116	IN	GND	2.7 V	OUT				"							GND	"	1Y	"	22	"
T_C = +125°C		"	117	"				GND	2.7 V	OUT	"							"	"	2Y	"	"	"
		"	118	"							"	OUT	2.7 V	GND				"	"	3Y	"	"	"
		"	119	"							"				OUT	2.7 V	GND	"	"	4Y	"	"	"
	t_{PLH1}	"	120	"	GND	2.7 V	OUT				"							"	"	1Y	"	"	"
		"	121	"				GND	2.7 V	OUT	"							"	"	2Y	"	"	"
		"	122	"							"	OUT	2.7 V	GND				"	"	3Y	"	"	"
		"	123	"							"				OUT	2.7 V	GND	"	"	4Y	"	"	"

See footnotes at end of device type 06

TABLE III. Group A inspection for device type 06 – Continued.
Terminal conditions (pins not designated may be H ≥ 2.0 V, or L ≤ 0.8 V, or open)

Subgroup	Symbol	MIL-STD-883 method	Cases E,F	1	2	3	4	5	6	7	8	9	10	11	12	13	14	15	16	Measured terminal	Test limits		Unit
			X, 2 7/	2	3	4	5	7	8	9	10	12	13	14	15	17	18	19	20		Min	Max	
			Test no.	S	1A	1B	1Y	2A	2B	2Y	GND	3Y	3B	3A	4Y	4B	4A	0E	V_{CC}				
10	t_{PHL2}	3003	124	GND	IN	GND	OUT				GND							GND	5.0 V	1Y	2.0	11	ns
T_C = +125°C		Fig. 9	125	"				IN	GND	OUT	"							"	"	2Y	"	"	"
		"	126	"							"	OUT	GND	IN				"	"	3Y	"	"	"
		"	127	"							"				OUT	GND	IN	"	"	4Y	"	"	"
	t_{PLH2}	"	128	"	IN	GND	OUT				"							"	"	1Y	"	12	"
		"	129	"				IN	GND	OUT	"							"	"	2Y	"	"	"
		"	130	"							"	OUT	GND	IN				"	"	3Y	"	"	"
		"	131	"							"				OUT	GND	IN	"	"	4Y	"	"	"
	t_{ZH}	"	132	2.7 V		2.7 V	OUT				"							IN	"	1Y	"	28	"
		"	133	"					2.7 V	OUT	"							"	"	2Y	"	"	"
		"	134	"							"	OUT	2.7 V					"	"	3Y	"	"	"
		"	135	"							"				OUT	2.7 V		"	"	4Y	"	"	"
	t_{ZL}	"	136	GND	GND		OUT				"							"	"	1Y	"	30	"
		"	137	"				GND		OUT	"							"	"	2Y	"	"	"
		"	138	"							"	OUT		GND				"	"	3Y	"	"	"
		"	139	"							"				OUT		GND	"	"	4Y	"	"	"
	t_{HZ} 6/	"	140	2.7 V		2.7 V	OUT				"							"	"	1Y	"	15	"
		"	141	"					2.7 V	OUT	"							"	"	2Y	"	"	"
		"	142	"							"	OUT	2.7 V					"	"	3Y	"	"	"
		"	143	"							"				OUT	2.7 V		IN	"	4Y	"	"	"
	t_{LZ}	"	144	GND	GND		OUT				"							"	"	1Y	"	22	"
		"	145	"				GND		OUT	"							"	"	2Y	"	"	"
		"	146	"							"	OUT		GND				"	"	3Y	"	"	"
		"	147	"							"				OUT		GND	"	"	4Y	"	"	"
11	Same tests, terminal conditions, and limits as for subgroup 10, except T_C = -55°C.																						

1/ For circuit B, $I_{OS(max)}$ = -110 mA.

2/ A = 2.4 V; B = 0.4 V.

3/ H ≥ 1.5 V; L ≤ 1.5 V.

4/ Only a summary of attributes is required.

5/ t_{HZ} maximum limit for circuit C is 22 ns.

6/ t_{HZ} maximum limit for circuit C is 24 ns.

7/ Case 2 pins not designated are NC.

8/ I_{IL} limits for circuit B shall be -0.005 mA min / -0.1 mA max.

9/ I_{IL} limits for circuit B shall be -0.005 mA min / -0.05 mA max.

TABLE III. Group A inspection for device type 07
Terminal conditions (pins not designated may be H ≥ 2.0 V, or L ≤ 0.8 V, or open)

Subgroup	Symbol	MIL-STD-883 method	Cases E,F	1	2	3	4	5	6	7	8	9	10	11	12	13	14	15	16	Measured terminal	Test limits		Unit
			X, 2 7/	2	3	4	5	7	8	9	10	12	13	14	15	17	18	19	20		Min	Max	
			Test no.	S	1A	1B	1Y	2A	2B	2Y	GND	3Y	3B	3A	4Y	4B	4A	0E	V_{CC}				
1	V_{OH}	3006	1	2.0 V		0.8 V	-2.0 mA				GND							0.8 V	4.5 V	1Y	2.4		V
T_C = +25°C		"	2	"					0.8 V	-2.0 mA	"							"	"	2Y	"		"
		"	3	"							"	-2.0 mA	0.8 V					"	"	3Y	"		"
		"	4	"							"				-2.0 mA	0.8 V		"	"	4Y	"		"
	V_{OL}	3007	5	0.8 V	2.0 V		20 mA				"							"	"	1Y		0.5	"
		"	6	"				2.0 V		20 mA	"							"	"	2Y		"	"
		"	7	"							"	20 mA		2.0 V				"	"	3Y		"	"
		"	8	"							"				20 mA		2.0 V	"	"	4Y		"	"
	I_{OFF1}		9	GND	5.5 V		2.7 V				"							2.0 V	5.5 V	1Y		50	μA
			10	"				5.5 V		2.7 V	"							"	"	2Y		"	"
			11	"							"	2.7 V		5.5 V				"	"	3Y		"	"
			12	"							"				2.7 V		5.5 V	"	"	4Y		"	"
	I_{OFF2}		13	5.5 V		GND	0.5 V				"							"	"	1Y		-50	"
			14	"					GND	0.5 V	"							"	"	2Y		"	"
			15	"							"	0.5 V	GND					"	"	3Y		"	"
			16	"							"				0.5 V	GND		"	"	4Y		"	"
	I_{CEX}		17	5.5 V		GND	5.5 V				"							GND	"	1Y		250	"
			18	"					GND	5.5 V	"							"	"	2Y		"	"
			19	"							"	5.5 V	GND					"	"	3Y		"	"
			20	"							"				5.5 V	GND		"	"	4Y		"	"
	I_{IL}	3009	21	0.5 V							"								"	S	-2.0	-4.0	mA
		"	22	GND							"							0.5 V	"	0E	-1.0	-2.0	"
		"	23	GND	0.5 V						"								"	1A	"	"	"
		"	24	5.5 V		0.5 V					"								"	1B	"	"	"
		"	25	GND				0.5 V			"								"	2A	"	"	"
		"	26	5.5 V					0.5 V		"								"	2B	"	"	"
		"	27	5.5 V							"		0.5 V						"	3B	"	"	"
		"	28	GND							"			0.5 V					"	3A	"	"	"
		"	29	5.5 V							"					0.5 V			"	4B	"	"	"
		"	30	GND							"						0.5 V		"	4A	"	"	"
	I_{IH1}	3010	31	2.7 V							"								"	S		100	μA
		"	32	5.5 V							"							2.7 V	"	0E		50	"
		"	33	5.5 V	2.7 V						"								"	1A		"	"
		"	34	GND		2.7 V					"								"	1B		"	"
		"	35	5.5 V				2.7 V			"								"	2A		"	"
		"	36	GND					2.7 V		"								"	2B		"	"
		"	37	GND							"		2.7 V						"	3B		"	"
		"	38	5.5 V							"			2.7 V					"	3A		"	"
		"	39	GND							"					2.7 V			"	4B		"	"
		"	40	5.5 V							"						2.7 V		"	4A		"	"

See footnotes at end of device type 07

TABLE III. Group A inspection for device type 07 – Continued.
Terminal conditions (pins not designated may be H ≥ 2.0 V, or L ≤ 0.8 V, or open)

Subgroup	Symbol	MIL-STD-883 method	Cases E,F	1	2	3	4	5	6	7	8	9	10	11	12	13	14	15	16	Measured terminal	Test limits		Unit
			X, 2 7/	2	3	4	5	7	8	9	10	12	13	14	15	17	18	19	20		Min	Max	
			Test no.	S	1A	1B	1Y	2A	2B	2Y	GND	3Y	3B	3A	4Y	4B	4A	0E	V_{CC}				
1	I_{IH2}	3010	41	5.5 V							GND								5.5 V	S		1.0	mA
T_C = +25°C		"	42	5.5 V							"							5.5 V	"	0E		"	"
		"	43	5.5 V	5.5 V						"								"	1A		"	"
		"	44	GND		5.5 V					"								"	1B		"	"
		"	45	5.5 V				5.5 V			"								"	2A		"	"
		"	46	GND					5.5 V		"								"	2B		"	"
		"	47	GND							"		5.5 V						"	3B		"	"
		"	48	5.5 V							"			5.5 V					"	3A		"	"
		"	49	GND							"					5.5 V			"	4B		"	"
		"	50	5.5 V							"						5.5 V		"	4A		"	"
	I_{OS}	3011	51	5.5 V		GND	GND				"							GND	"	1Y	-40	-100 1/	"
		"	52	"					GND	GND	"							"	"	2Y	"	"	"
		"	53	"							"	GND	GND					"	"	3Y	"	"	"
		"	54	"							"				GND	GND		"	"	4Y	"	"	"
	I_{CCH}	3005	55	GND	GND	GND		GND	GND		"		GND	GND		GND	GND	"	"	V_{CC}		56	"
	I_{CCL}	"	56	5.5 V	GND	5.5 V		GND	5.5 V		"		5.5 V	GND		5.5 V	GND	"	"	V_{CC}		81	"
	I_{CCO}	"	57	GND	GND	GND		GND	GND		"		GND	GND		GND	GND	5.5 V	"	V_{CC}		87	"
	V_{IC}		58	-18 mA							"								4.5 V	S		-1.2	V
			59		-18 mA						"								"	1A		"	"
			60			-18 mA					"								"	1B		"	"
			61					-18 mA			"								"	2A		"	"
			62						-18 mA		"								"	2B		"	"
			63								"		-18 mA						"	3B		"	"
			64								"			-18 mA					"	3A		"	"
			65								"					-18 mA			"	4B		"	"
			66								"						-18 mA		"	4A		"	"
			67								"							-18 mA	"	0E		"	"
2	Same tests, terminal conditions, and limits as for subgroup 1, except T_C = +125°C and V_{IC} tests are omitted. V_{IL} = 0.7 V, $V_{OL(max)}$ = 0.45 V.																						
3	Same tests, terminal conditions, and limits as for subgroup 1, except T_C = -55°C and V_{IC} tests are omitted.																						

See footnotes at end of device type 07

TABLE III. Group A inspection for device type 07 – Continued.
Terminal conditions (pins not designated may be H ≥ 2.0 V, or L ≤ 0.8 V, or open)

Subgroup	Symbol	MIL-STD-883 method	Cases E,F	1	2	3	4	5	6	7	8	9	10	11	12	13	14	15	16	Measured terminal	Test limits		Unit
			X, 2 7/	2	3	4	5	7	8	9	10	12	13	14	15	17	18	19	20		Min	Max	
			Test no.	S	1A	1B	1Y	2A	2B	2Y	GND	3Y	3B	3A	4Y	4B	4A	0E	V_{CC}				
7 4/	Truth	3014	68	A 2/	A 2/	B 2/	H				GND							B 2/	4.5 V	See 3/			
T_C = +25°C	table	"	69	A	B	A	L				"							"	"	"			
	test	"	70	B	B	A	H				"							"	"	"			
		"	71	B	A	B	L				"							"	"	"			
		"	72	A				A	B	H	"							"	"	"			
		"	73	A				B	A	L	"							"	"	"			
		"	74	B				B	A	H	"							"	"	"			
		"	75	B				A	B	L	"							"	"	"			
		"	76	A							"	H	B	A				"	"	"			
		"	77	A							"	L	A	B				"	"	"			
		"	78	B							"	H	A	B				"	"	"			
		"	79	B							"	L	B	A				"	"	"			
		"	80	A							"				H	B	A	"	"	"			
		"	81	A							"				L	A	B	"	"	"			
		"	82	B							"				H	A	B	"	"	"			
			83	B							"				L	B	A	"	"	"			
8 4/	Same tests, terminal conditions, and limits as for subgroup 7, except T_C = +125°C and T_C = -55°C.																						
9	t_{PHL1}	3003	84	IN	GND	2.7 V	OUT				GND							GND	5.0 V	1Y	2.0	14	ns
T_C = +25°C		Fig. 10	85	"				GND	2.7 V	OUT	"							"	"	2Y	"	"	"
		"	86	"							"	OUT	2.7 V	GND				"	"	3Y	"	"	"
		"	87	"							"				OUT	2.7 V	GND	"	"	4Y	"	"	"
	t_{PLH1}	"	88	"	GND	2.7 V	OUT				"							"	"	1Y	"	"	"
		"	89	"				GND	2.7 V	OUT	"							"	"	2Y	"	"	"
		"	90	"							"	OUT	2.7 V	GND				"	"	3Y	"	"	"
		"	91	"							"				OUT	2.7 V	GND	"	"	4Y	"	"	"
	t_{PHL2}	"	92	GND	IN	GND	OUT				"							"	"	1Y	"	8.0	"
		"	93	"				IN	GND	OUT	"							"	"	2Y	"	"	"
		"	94	"							"	OUT	GND	IN				"	"	3Y	"	"	"
		"	95	"							"				OUT	GND	IN	"	"	4Y	"	"	"
	t_{PLH2}	"	96	"	IN	GND	OUT				"							"	"	1Y	"	"	"
		"	97	"				IN	GND	OUT	"							"	"	2Y	"	"	"
		"	98	"							"	OUT	GND	IN				"	"	3Y	"	"	"
		"	99	"							"				OUT	GND	IN	"	"	4Y	"	"	"

See footnotes at end of device type 07

TABLE III. Group A inspection for device type 07 – Continued.
Terminal conditions (pins not designated may be H ≥ 2.0 V, or L ≤ 0.8 V, or open)

Subgroup	Symbol	MIL-STD-883 method	Cases E,F	1	2	3	4	5	6	7	8	9	10	11	12	13	14	15	16	Measured terminal	Test limits		Unit
			X, 2 7/	2	3	4	5	7	8	9	10	12	13	14	15	17	18	19	20		Min	Max	
			Test no.	S	1A	1B	1Y	2A	2B	2Y	GND	3Y	3B	3A	4Y	4B	4A	0E	V_{CC}				
9	t_{ZH}	3003	100	2.7 V		GND	OUT				GND							IN	5.0 V	1Y	2.0	21.5	ns
T_C = +25°C		Fig. 10	101	"					GND	OUT	"							"	"	2Y	"	"	"
		"	102	"							"	OUT	GND					"	"	3Y	"	"	"
		"	103	"							"				OUT	GND		"	"	4Y	"	"	"
	t_{ZL}	"	104	GND	2.7 V		OUT				"							"	"	1Y	"	23	"
		"	105	"				2.7 V		OUT	"							"	"	2Y	"	"	"
		"	106	"							"	OUT		2.7 V				"	"	3Y	"	"	"
		"	107	"							"				OUT		2.7 V	"	"	4Y	"	"	"
	t_{HZ} 5/	"	108	2.7 V		GND	OUT				"							"	"	1Y	"	11.5	"
		"	109	"					GND	OUT	"							"	"	2Y	"	"	"
		"	110	"							"	OUT	GND					"	"	3Y	"	"	"
		"	111	"							"				OUT	GND		"	"	4Y	"	"	"
	t_{LZ}	"	112	GND	2.7 V		OUT				"							"	"	1Y	"	17	"
		"	113	"				2.7 V		OUT	"							"	"	2Y	"	"	"
		"	114	"							"	OUT		2.7 V				"	"	3Y	"	"	"
		"	115	"							"				OUT		2.7 V	"	"	4Y	"	"	"
10	t_{PHL1}	"	116	IN	GND	2.7 V	OUT				"							GND	"	1Y	"	18.5	"
T_C = +125°C		"	117	"				GND	2.7 V	OUT	"							"	"	2Y	"	"	"
		"	118	"							"	OUT	2.7 V	GND				"	"	3Y	"	"	"
		"	119	"							"				OUT	2.7 V	GND	"	"	4Y	"	"	"
	t_{PLH1}	"	120	"	GND	2.7 V	OUT				"							"	"	1Y	"	"	"
		"	121	"				GND	2.7 V	OUT	"							"	"	2Y	"	"	"
		"	122	"							"	OUT	2.7 V	GND				"	"	3Y	"	"	"
		"	123	"							"				OUT	2.7 V	GND	"	"	4Y	"	"	"
	t_{PHL2}	"	124	GND	IN	GND	OUT				"							"	"	1Y	"	10	"
		"	125	"				IN	GND	OUT	"							"	"	2Y	"	"	"
		"	126	"							"	OUT	GND	IN				"	"	3Y	"	"	"
		"	127	"							"				OUT	GND	IN	"	"	4Y	"	"	"
	t_{PLH2}	"	128	"	IN	GND	OUT				"							"	"	1Y	"	"	"
		"	129	"				IN	GND	OUT	"							"	"	2Y	"	"	"
		"	130	"							"	OUT	GND	IN				"	"	3Y	"	"	"
		"	131	"							"				OUT	GND	IN	"	"	4Y	"	"	"
	t_{ZH}	"	132	2.7 V		GND	OUT				"							IN	"	1Y	"	28	"
		"	133	"					GND		"							"	"	2Y	"	"	"
		"	134	"							"	OUT	GND					"	"	3Y	"	"	"
		"	135	"							"				OUT	GND		"	"	4Y	"	"	"

See footnotes at end of device type 07

TABLE III. Group A inspection for device type 07 – Continued.
Terminal conditions (pins not designated may be H ≥ 2.0 V, or L ≤ 0.8 V, or open)

Subgroup	Symbol	MIL-STD-883 method	Cases E,F	1	2	3	4	5	6	7	8	9	10	11	12	13	14	15	16	Measured terminal	Test limits		Unit
			X, 2 7/	2	3	4	5	7	8	9	10	12	13	14	15	17	18	19	20		Min	Max	
			Test no.	S	1A	1B	1Y	2A	2B	2Y	GND	3Y	3B	3A	4Y	4B	4A	0E	V_{CC}				
10	t_{ZL}	3003	136	GND	2.7 V		OUT				GND							IN	5.0 V	1Y	2.0	30	ns
T_C = +125°C		Fig. 10	137	"				2.7 V		OUT	"							"	"	2Y	"	"	"
		"	138	"							"	OUT		2.7 V				"	"	3Y	"	"	"
		"	139	"							"				OUT		2.7 V	"	"	4Y	"	"	"
	t_{HZ} 6/	"	140	2.7 V		GND	OUT				"							"	"	1Y	"	15	"
		"	141	"					GND	OUT	"							"	"	2Y	"	"	"
		"	142	"							"	OUT	GND					"	"	3Y	"	"	"
		"	143	"							"				OUT	GND		"	"	4Y	"	"	"
	t_{LZ}	"	144	GND	2.7 V		OUT				"							"	"	1Y	"	22	"
		"	145	"				2.7 V		OUT	"							"	"	2Y	"	"	"
		"	146	"							"	OUT		2.7 V				"	"	3Y	"	"	"
		"	147	"							"				OUT		2.7 V	"	"	4Y	"	"	"
11	Same tests, terminal conditions, and limits as for subgroup 10, except T_C = -55°C.																						

1/ For circuit B, $I_{OS(max)}$ = -110 mA.

2/ A = 2.4 V; B = 0.4 V.

3/ H ≥ 1.5 V; L ≤ 1.5 V.

4/ Only a summary of attributes is required.

5/ t_{HZ} maximum limit for circuit C is 22 ns.

6/ t_{HZ} maximum limit for circuit C is 24 ns.

7/ Case 2 pins not designated are NC.

TABLE III. Group A inspection for device type 08

Terminal conditions (pins not designated may be H ≥ 2.0 V, or L ≤ 0.8 V, or open)

Subgroup	Symbol	MIL-STD-883 method	Cases E,F	1	2	3	4	5	6	7	8	9	10	11	12	13	14	15	16	Measured terminal	Test limits		Unit
			X, 2 5/	2	3	4	5	7	8	9	10	12	13	14	15	17	18	19	20		Min	Max	
			Test no.	1G	B	1C3	1C2	1C1	1C0	1Y	GND	2Y	2C0	2C1	2C2	2C3	A	2G	V_{CC}				
1	V_{OH}	3006	1	0.8 V	0.8 V				2.0 V	-1 mA	GND						0.8 V		4.5 V	1Y	2.4		V
T_C = +25°C		3006	2		“						“	-1 mA	2.0 V				“	0.8 V	“	2Y	2.4		“
	V_{OL}	3007	3	0.8 V	“				0.8 V	20 mA	“						“		“	1Y		0.5	“
		3007	4		“						“	20 mA	0.8 V				“	0.8 V	“	2Y		0.5	“
	I_{OFF1}		5	2.0 V						2.7 V	“								5.5 V	1Y		50	µA
			6								“	2.7 V						2.0 V	"	2Y		50	“
	I_{OFF2}		7	2.0 V						0.5 V	“								“	1Y		-50	"
			8								“	0.5 V						2.0 V	“	2Y		-50	“
	V_{IC}		9								“						-18 mA		4.5 V	A		-1.2	V
			10		-18 mA						“								“	B		“	“
			11						-18 mA		“								“	1C0		“	“
			12					-18 mA			“								“	1C1		“	“
			13				-18 mA				“								“	1C2		“	“
			14			-18 mA					“								“	1C3		“	“
			15	-18 mA							“								“	1G		“	“
			16								“		-18 mA						“	2C0		“	“
			17								“			-18 mA					“	2C1		“	“
			18								“				-18 mA				“	2C2		“	“
			19								“					-18 mA			“	2C3		“	"
			20								“							-18 mA	“	2G		“	“
	I_{IL}	3009	21								“						0.5 V		5.5 V	A	-1.0	-2.0	mA
		“	22		0.5 V						“								“	B	“	“	“
		“	23	0.5 V							“								“	1G	“	“	“
		“	24								“							0.5 V	“	2G	“	“	“
		“	25	GND	GND				0.5 V		“						GND		“	1C0	“	“	“
		“	26	"	GND			0.5 V			“						5.5 V		“	1C1	“	“	“
		“	27	"	5.5 V		0.5 V				“						GND		“	1C2	“	“	“
		“	28	"	5.5 V	0.5 V					“						5.5 V		“	1C3	“	“	“
		“	29		GND						“		0.5 V				GND	GND	“	2C0	“	“	“
		“	30		GND						“			0.5 V			5.5 V	"	“	2C1	“	“	“
		“	31		5.5 V						“				0.5 V		GND	"	“	2C2	“	“	“
		“	32		5.5 V						“					0.5 V	5.5 V	"	“	2C3	“	“	“
	I_{IH1}	3010	33								“						2.7 V		“	A		50	µA
		“	34		2.7 V						“								“	B		“	“
		“	35	2.7 V							“								“	1G		“	“
		“	36								“							2.7 V	“	2G		“	“
		“	37	5.5 V	5.5 V				2.7 V		“						5.5 V		“	1C0		“	“
		“	38	“	5.5 V			2.7 V			“						GND		“	1C1		“	“
		“	39	“	GND		2.7 V				“						5.5 V		“	1C2		“	“
		“	40	“	GND	2.7 V					“						GND		“	1C3		“	“
		“	41		5.5 V						“		2.7 V				5.5 V	5.5 V	“	2C0		“	“
		“	42		5.5 V						“			2.7 V			GND	"	“	2C1		“	“
		"	43		GND						“				2.7 V		5.5 V	"	“	2C2		“	“
		"	44		GND						“					2.7 V	GND	"	“	2C3		“	“

See footnotes at end of device type 08

TABLE III. Group A inspection for device type 08 – Continued.
Terminal conditions (pins not designated may be H ≥ 2.0 V, or L ≤ 0.8 V, or open)

Subgroup	Symbol	MIL-STD-883 method	Cases E,F	1	2	3	4	5	6	7	8	9	10	11	12	13	14	15	16	Measured terminal	Test limits		Unit
			X, 2 5/	2	3	4	5	7	8	9	10	12	13	14	15	17	18	19	20		Min	Max	
			Test no.	1G	B	1C3	1C2	1C1	1C0	1Y	GND	2Y	2C0	2C1	2C2	2C3	A	2G	V_{CC}				
1	I_{IH2}	3010	45								GND						5.5 V		5.5 V	A		1.0	mA
T_C = +25°C		"	46		5.5 V						"								"	B		"	"
		"	47	5.5 V							"								"	1G		"	"
		"	48								"							5.5 V	"	2G		"	"
		"	49	5.5 V	5.5 V				5.5 V		"						5.5 V		"	1C0		"	"
		"	50	"	5.5 V			5.5 V			"						GND		"	1C1		"	"
		"	51	"	GND		5.5 V				"						5.5 V		"	1C2		"	"
		"	52	"	GND	5.5 V					"						GND		"	1C3		"	"
			53		5.5 V						"		5.5 V				5.5 V	5.5 V	"	2C0		"	"
	I_{IH2}	"	54		5.5 V						"			5.5 V			GND	"	"	2C1		1.0	mA
		"	55		GND						"				5.5 V		5.5 V	"	"	2C2		"	"
		"	56		"						"					5.5 V	GND	"	"	2C3		"	"
	I_{OS}	3011	57	GND	"				5.5 V	GND	"						"	GND	"	1Y	-40	-100 4/	"
		"	58	GND	"						"	GND	5.5 V				"	GND	"	2Y	-40	-100 4/	"
	I_{CC0}	3005	59	5.5 V	"	GND	GND	GND	GND		"		GND	GND	GND	GND	"	5.5 V	"	V_{CC}		100	"
	I_{CC1}	3005	60	GND	"	GND	GND	GND	GND		"		GND	GND	GND	GND	"	GND	"	V_{CC}		80	"
	I_{CEX}		61	GND	"				5.5 V	5.5 V	"						"		"	1Y		250	µA
			62		"						"	5.5 V	5.5 V				"	GND	"	2Y		250	"
2	Same tests, terminal conditions, and limits as for subgroup 1, except T_C = +125°C and V_{IC} tests are omitted. V_{IL} = 0.7 V, $V_{OL(max)}$ = 0.45 V.																						
3	Same tests, terminal conditions, and limits as for subgroup 1, except T_C = -55°C and V_{IC} tests are omitted.																						
7 3/	Truth	3014	63	B 1/	B 1/	A 1/	A 1/	A 1/	B 1/	L	GND	L	B 1/	A 1/	A 1/	A 1/	B	B 1/	4.5 V	See 2/			
T_C = +25°C	table	"	64	"	"	B	B	B	A	H	"	H	A	B	B	B	B	"	"	"			
	test	"	65	"	"	A	A	B	"	L	"	L	A	B	A	A	A	"	"	"			
		"	66	"	"	B	B	A	"	H	"	H	B	A	B	B	A	"	"	"			
		"	67	"	A	A	B	A	"	L	"	L	A	A	B	A	B	"	"	"			
		"	68	"	"	B	A	B	B	H	"	H	B	B	A	B	B	"	"	"			
		"	69	"	"	B	A	A	A	L	"	L	A	A	A	B	A	"	"	"			
		"	70	"	"	A	B	B	B	H	"	H	B	B	B	A	A	"	"	"			
8	Same tests, terminal conditions, and limits as for subgroup 7, except T_C = +125°C and T_C = -55°C.																						

See footnotes at end of device type 08

TABLE III. Group A inspection for device type 08 - Continued.
Terminal conditions (pins not designated may be H ≥ 2.0 V, or L ≤ 0.8 V, or open)

Subgroup	Symbol	MIL-STD-883 method	Cases E,F	1	2	3	4	5	6	7	8	9	10	11	12	13	14	15	16	Measured terminal	Test limits		Unit
			X, 2 5/	2	3	4	5	7	8	9	10	12	13	14	15	17	18	19	20		Min	Max	
			Test no.	1G	B	1C3	1C2	1C1	1C0	1Y	GND	2Y	2C0	2C1	2C2	2C3	A	2G	V_{CC}				
9	t_{PHL1}	3003	71	GND	GND				IN	OUT	GND						GND		5.0 V	1Y	2.0	11.0	ns
T_C = +25°C		Fig. 10	72	"	GND			IN		"	"						2.7 V		"	"	"	"	"
		"	73	"	2.7 V		IN			"	"						GND		"	"	"	"	"
		"	74	"	2.7 V	IN				"	"						2.7 V		"	"	"	"	"
		"	75		GND						"	OUT	IN				GND	GND	"	2Y	"	"	"
		"	76		GND						"	"		IN			2.7 V	"	"	"	"	"	"
		"	77		2.7 V						"	"			IN		GND	"	"	"	"	"	"
		"	78		2.7 V						"	"				IN	2.7 V	"	"	"	"	"	"
	t_{PLH1}	"	79	GND	GND				IN	OUT	"						GND		"	1Y	"	"	"
		"	80	"	GND			IN		"	"						2.7 V		"	"	"	"	"
		"	81	"	2.7 V		IN			"	"						GND		"	"	"	"	"
		"	82	"	2.7 V	IN				"	"						2.7 V		"	"	"	"	"
		"	83		GND						"	OUT	IN				GND	GND	"	2Y	"	"	"
		"	84		GND						"	"		IN			2.7 V	"	"	"	"	"	"
		"	85		2.7 V						"	"			IN		GND	"	"	"	"	"	"
		"	86		2.7 V						"	"				IN	2.7 V	"	"	"	"	"	"
	t_{PHL2}	"	87	GND	GND			GND	2.7 V	OUT	"						IN		"	1Y	"	20	"
		"	88	GND	IN		GND		2.7 V	OUT	"						GND		"	1Y	"	"	"
		"	89		GND						"	OUT	2.7 V	GND			IN	GND	"	2Y	"	"	"
		"	90		IN						"	OUT	2.7 V		GND		GND	GND	"	2Y	"	"	"

See footnotes at end of device type 08

TABLE III. Group A inspection for device type 08 – Continued.
Terminal conditions (pins not designated may be H ≥ 2.0 V, or L ≤ 0.8 V, or open)

Subgroup	Symbol	MIL-STD-883 method	Cases E,F	1	2	3	4	5	6	7	8	9	10	11	12	13	14	15	16	Measured terminal	Test limits		Unit
			X, 2 5/	2	3	4	5	7	8	9	10	12	13	14	15	17	18	19	20		Min	Max	
			Test no.	1G	B	1C3	1C2	1C1	1C0	1Y	GND	2Y	2C0	2C1	2C2	2C3	A	2G	V_{CC}				
9	t_{PLH2}	3003	91	GND	GND			GND	2.7 V	OUT	GND						IN		5.0 V	1Y	2.0	20	ns
T_C = +25°C		Fig. 10	92	GND	IN		GND		2.7 V	OUT	"						GND		"	1Y	"	"	"
		"	93		GND						"	OUT	2.7 V	GND			IN	GND	"	2Y	"	"	"
		"	94		IN						"	OUT	2.7 V		GND		GND	GND	"	2Y	"	"	"
	t_{ZH}	"	95	IN	GND				2.7 V	OUT	"						"		"	1Y	"	23	"
		"	96	"	"						"	OUT	2.7 V				"	IN	"	2Y	"	23	"
	t_{ZL}	"	97	"	"				GND	OUT	"						"		"	1Y	"	24	"
		"	98	"	"						"	OUT	GND				"	IN	"	2Y	"	24	"
	t_{HZ}	"	99	"	"				2.7 V	OUT	"						"		"	1Y	"	13.5	"
		"	100	"	"						"	OUT	2.7 V				"	IN	"	2Y	"	13.5	"
	t_{LZ}	"	101	"	"				GND	OUT	"						"		"	1Y	"	15.5	"
		"	102	"	"						"	OUT	GND				"	IN	"	2Y	"	15.5	"
10 T_C = +125°C	Same tests and terminal conditions as subgroup 9, with limits as follows: t_{PHL1} = 14.5 ns, t_{PLH1} = 14.5 ns, t_{PHL2} = 26 ns, t_{PLH2} = 26 ns, t_{ZH} = 30 ns, t_{ZL} = 31 ns, t_{HZ} = 18 ns, t_{LZ} = 20 ns.																						
11	Same tests, terminal conditions, and limits as for subgroup 10, except T_C = -55°C.																						

1/ A = 2.4 V; B = 0.4 V.

2/ H ≥ 1.5 V; L ≤ 1.5 V.

3/ Only a summary of attributes is required.

4/ For circuit B, IOS(max) = -110 mA.

5/ Case 2 pins not designated are NC.

5. PACKAGING

5.1 Packaging requirements. For acquisition purposes, the packaging requirements shall be as specified in the contract or order (see 6.2). When packaging of materiel is to be performed by DoD or in-house contractor personnel, these personnel need to contact the responsible packaging activity to ascertain packaging requirements. Packaging requirements are maintained by the Inventory Control Point's packaging activity within the Military Service or Defense Agency, or within the military service's system command. Packaging data retrieval is available from the managing Military Department's or Defense Agency's automated packaging files, CD-ROM products, or by contacting the responsible packaging activity.

6. NOTES

(This section contains information of a general or explanatory nature that may be helpful, but it is not mandatory)

6.1 Intended use. Microcircuits conforming to this specification are intended for logistic support of existing equipment.

6.2 Acquisition requirements. Acquisition documents should specify the following:

a. Title, number, and date of the specification.
b. PIN and compliance identifier, if applicable (see 1.2).
c. Requirements for delivery of one copy of the conformance inspection data pertinent to the device inspection lot to be supplied with each shipment by the device manufacturer, if applicable.
d. Requirement for certificate of compliance, if applicable.
e. Requirements for notification of change of product or process to acquiring activity in addition to notification to the qualifying activity, if applicable.
f. Requirements for failure analysis (including required test condition of method 5003 of MIL-STD-883), corrective action and reporting of results, if applicable.
g. Requirements for product assurance options.
h. Requirements for special carriers, lead lengths or lead forming, if applicable. These requirements shall not affect the part number. Unless otherwise specified, these requirements will not apply to direct purchase by or direct shipment to the Government.
i. Requirements for "JAN" marking.
j. Packaging requirements (see 5.1).

6.3 Qualification. With respect to products requiring qualification, awards will be made only for products which are, at the time of award of contract, qualified for inclusion in Qualified Manufacturers List QML-38535 whether or not such products have actually been so listed by that date. The attention of the contractors is called to these requirements, and manufacturers are urged to arrange to have the products that they propose to offer to the Federal Government tested for qualification in order that they may be eligible to be awarded contracts or purchase orders for the products covered by this specification. Information pertaining to qualification of products may be obtained from DSCC-VQ, 3990 E. Broad Street, Columbus, Ohio 43123-1199.

6.4 Superseding information. The requirements of MIL-M-38510 have been superseded to take advantage of the available Qualified Manufacturer Listing (QML) system provided by MIL-PRF-38535. Previous references to MIL-M-38510 in this document have been replaced by appropriate references to MIL-PRF-38535. All technical requirements now consist of this specification and MIL-PRF-38535. The MIL-M-38510 specification sheet number and PIN have been retained to avoid adversely impacting existing government logistics systems and contractor's parts lists.

6.5 Abbreviations, symbols and definitions. The abbreviations, symbols, and definitions used herein are defined in MIL-PRF-38535 and MIL-HDBK-1331, and as follows:

GND ..... Electrical ground (common terminal)
I_{IN} ..... Current flowing into an input terminal.
V_{IN} ..... Voltage level at an input terminal.
t_{ZH} ..... Output enable time (of a three-state output) to high level. The time between the specified reference points on the input and output voltage waveforms with the three-state output changing from a high-impedance (off) state to the defined high level.
t_{ZL} ..... Output enable time (of a three-state output) to low level. The time between the specified reference points on the input and output voltage waveforms with the three-state output changing from a high-impedance (off) state to the defined low level.
t_{HZ} ..... Output disable time (of a three-state output) from high level. The time between the specified reference points on the input and output voltage waveforms with the three-state output changing from the defined high level impedance (off) state.
t_{LZ} ..... Output disable time (of a three-state output) from low level. The time between the specified reference points on the input and output voltage waveforms with the three state output changing from the defined low level to a high impedance (off) state.

6.6 Logistic support. Lead materials and finishes (see 3.4) are interchangeable. Unless otherwise specified, microcircuits acquired for Government logistic support will be acquired to device class B (see 1.2.2), lead material and finish A (see 3.4). Longer length leads and lead forming shall not affect the part number.

6.7 Substitutability. The cross-reference information below is presented for the convenience of users. Microcircuits covered by this specification will functionally replace the listed generic industry type. Generic industry microcircuit types may not have equivalent operational performance characteristics across military temperature ranges or reliability factors equivalent to MIL-M-35810 device types and may have slight physical variations in relation to case size. The presence of this information should not be deemed as permitting substitution of generic industry types for MIL-M-38510 types or as a waiver of any of the provisions of MIL-PRF-38535.

Device type	Commercial type
01	54S151
02	54S153
03	54S157
04	54S158
05	54S251
06	54S257
07	54S258
08	54S253

6.8 Manufacturers' designations. Manufacturers' circuits included in this specification are designated as shown in table IV.

6.9 Changes from previous issue. Marginal notations are not used in this revision to identify changes with respect to the previous issue, due to the extent of the changes.

TABLE IV. Manufacturers' designations.

Device type	Commercial Type	Circuits				
		A	B	C	D	E
		Texas Instruments	Signetics Corp.	Advanced Micro Devices Inc.	Fairchild Semiconductor	National Semiconductor
01	54S151	X	X	X	X	X
02	54S153	X	X	X	X	X
03	54S157	X	X	X	X	X
04	54S158	X	X	X	X	X
05	54S251	X	X	X	X	
06	54S257	X	X	X	X	
07	54S258	X	X	X	X	
08	54S253		X	X	X	

Custodians:
Army – CR
Navy - EC
Air Force – 11
DLA-CC

Preparing activity:
DLA - CC

(Project 5962-2005-007)

Review activities:
Army – MI, SM
Navy – AS, CG, MC, SH, TD
Air Force – 03, 19, 99

.

NOTE: The activities listed above were interested in this document as of the date of this document. Since organizations and responsibilities can change, you should verify the currency of the information above using the ASSIST Online database at http://assist.daps.dla.mil .