INCH-POUND

MIL-M-38510/663A
27 February 2006

SUPERSEDING
MIL-M-38510/663
30 September 1987

MILITARY SPECIFICATION

MICROCIRCUITS, DIGITAL, HIGH-SPEED CMOS, COUNTERS, MONOLITHIC SILICON

Reactivated after 27 Feb. 2006 and may be used for new and existing designs and acquisitions.

This specification is approved for use by all Departments and Agencies of the Department of Defense.

The requirements for acquiring the product herein shall consist of this specification sheet and MIL-PRF 38535.

1. SCOPE

1.1 Scope. This specification covers the detail requirements for monolithic silicon, high speed CMOS, logic microcircuits. Two product assurance classes and a choice of case outlines and lead finishes are provided and are reflected in the complete Part or Identifying Number (PIN). For this product, the requirements of MIL-M-38510 have been superseded by MIL-PRF-38535 (see 6.3).

1.2 Part or identifying number (PIN). The PIN is in accordance with MIL-PRF-38535 and as specified herein.

1.2.1 Device types. The device types are as follows:

Device type	Circuit
01	BCD decade counter, asynchronous reset, synchronous load
02	4-bit binary counter, asynchronous reset, synchronous load
03	BCD decade counter, synchronous reset and load
04	4-bit binary counter, synchronous reset and load
05	Synchronous 4-bit binary up/down counter, asynchronous load
06	Synchronous BCD decade up/down counter, asynchronous reset and load
07	Synchronous 4-bit binary up/down counter, asynchronous reset and load
08	Synchronous dual 4-bit decade counter, asynchronous reset
09	Synchronous dual 4-bit binary counter, asynchronous reset
10	Decade counter/divider, 10 decoded outputs, asynchronous reset
11	14-stage ripple-carry binary counter, asynchronous reset
12	7-stage ripple-carry binary counter, asynchronous reset
13	12-stage ripple-carry binary counter, asynchronous reset

1.2.2 Device class. The device class is the product assurance level as defined in MIL-PRF-38535.

1.2.3 Case outlines. The case outlines are as designated in MIL-STD-1835 and as follows:

Outline letter	Descriptive designator	Terminals	Package style
C	GDIP1-T14 or CDIP2-T14	14	Dual-in-line
D	GDFP1-F14 or CDFP2-F14	14	Flat pack
E	GDIP1-T16 or CDIP2-T16	16	Dual-in-line
F	GDFP2-F16 or CDFP3-F16	16	Flat pack
X	CQCC1-N16	16	Square leadless chip carrier
2	CQCC1-N20	20	Square leadless chip carrier

Comments, suggestions, or questions on this document should be addressed to: Commander, Defense Supply Center Columbus, ATTN: DSCC-VAC, P.O. Box 3990, Columbus, OH 43218-3990, or email CMOS@dscc.dla.mil. Since contact information can change, you may want to verify the currency of this address information using the ASSIST Online database at http://assist.daps.dla.mil/

1.3 Absolute maximum ratings.

Supply voltage range (V_{CC}) ..... -0.5 V dc to +7.0 V dc
DC input voltage range (V_{IN})..... -0.5 V dc to V_{CC} + 0.5 V dc
DC output voltage range (V_{OUT})..... -0.5 V dc to V_{CC} + 0.5 V dc
Clamp diode current (I_{IK}, I_{OK})..... ±20 mA
DC output current per pin (I_{OUT})..... ±25 mA
DC V_{CC} or GND current per pin (I_{CC}, I_{GND})..... ±50 mA
Storage temperature range (T_{STG})..... -65° to +150°C
Maximum power dissipation (P_D)..... 300 mW
Lead temperature (soldering, 10 seconds) ..... +300°C
Thermal resistance, junction to case (θ_{JC}) ..... See MIL-STD-1835
Junction temperature (T_J) ..... 175°C

1.4 Recommended operating conditions.

All device types:

Supply voltage (V_{CC}) ..... 2.0 V dc to 6.0 V dc
Output voltage..... 0.0 V to V_{CC}
Case operating temperature range (T_C) ..... -55° to +125°C
Maximum input low voltage (V_{IL}) ..... 0.3 V at V_{CC} = 2.0 V
0.9 V at V_{CC} = 4.5 V
1.2 V at V_{CC} = 6.0 V
Minimum input high voltage (V_{IH})..... 1.5 V at V_{CC} = 2.0 V
3.15 V at V_{CC} = 4.5 V
4.2 V at V_{CC} = 6.0 V
Maximum Input rise and fall times (t_r, t_f):
V_{CC} = 2.0 V ..... 1000 ns
V_{CC} = 4.5 V ..... 500 ns
V_{CC} = 6.0 V ..... 400 ns
Setup time $\overline{LOAD}$ before clock (t_{SU}):
Device types 01-04 ($\overline{LOAD}$ to CLK)..... 45 ns (minimum)
Device type 05 ($\overline{U}$/D to CLK) ..... 62 ns (minimum)
Device types 03 and 04 ($\overline{CLR}$ to CLK)..... 45 ns (minimum)
Device types 01-04 ($\overline{EN}$BLP, ENBLT) ..... 60 ns (minimum)
Device type 05 ($\overline{ENBLG}$ to CLK) ..... 62 ns (minimum)
Device type 10 (CE to CLK) ..... 23 ns (minimum)
Device types 05 (A, B, C, and D to $\overline{LOAD}$) ..... 45 ns (minimum)
Device types 06 and 07 (A, B, C, and D to $\overline{LOAD}$) ..... 33 ns (minimum)
Hold time (t_h):
Device types 01-04 (CLK to A, B, C, and D)..... 15 ns (minimum)
Device types 01-04 (CLK to $\overline{LOAD}$)..... 8 ns (minimum)
Device types 03 and 04 (CLK to $\overline{CLR}$)..... 8 ns (minimum)
Device type 05 (CLK to $\overline{U}$/D) ..... 8 ns (minimum)
Device types 05-07 ($\overline{LOAD}$ to A, B, C, and D)..... 8 ns (minimum)
Device type 10 (CLK to CE) ..... 23 ns (minimum)
Device type 05 (CLK to $\overline{ENBLG}$) ..... 8 ns (minimum)
Clock pulse width ($t_{p(clock)}$):
Device types 01-04, 10..... 30 ns (minimum)
Device type 05..... 38 ns (minimum)
Device type 08..... 26 ns (minimum)
Device type 09..... 24 ns (minimum)
Device types 11-13..... 27 ns (minimum)
Device types 06 and 07 ..... 45 ns (minimum)
Reset pulse width ($t_{p(clear)}$):
Device types 01, 02, 10-13..... 24 ns (minimum)
Device type 06..... 78 ns (minimum)
Device type 07..... 39 ns (minimum)
Device types 08 and 09 ..... 38 ns (minimum)
Clock enable pulse width ($t_{p(CE)}$):
Device type 10..... 30 ns (minimum)

1.4 Recommended operating conditions – Continued.

Load pulse width ($t_{p(load)}$):
Device types 05 and 07 ..... 38 ns (minimum)
Device type 06 ..... 78 ns (minimum)
Removal time (t_{REM}) ($\overline{LOAD}$, $\overline{CLR}$ to CLK):
Device types 01 and 02 ..... 38 ns (minimum)
Device type 05 ..... 45 ns (minimum)
Device types 06 and 07 ..... 33 ns (minimum)
Device type 08 ..... 23 ns (minimum)
Device type 09 ..... 15 ns (minimum)
Device types 10-13 ..... 30 ns (minimum)

2. APPLICABLE DOCUMENTS

2.1 General. The documents listed in this section are specified in sections 3, 4, or 5 of this specification. This section does not include documents cited in other sections of this specification or recommended for additional information or as examples. While every effort has been made to ensure the completeness of this list, document users are cautioned that they must meet all specified requirements of documents cited in sections 3, 4, or 5 of this specification, whether or not they are listed.

2.2 Government documents.

2.2.1 Specifications and Standards. The following specifications and standards form a part of this specification to the extent specified herein. Unless otherwise specified, the issues of these documents are those cited in the solicitation or contract.

DEPARTMENT OF DEFENSE SPECIFICATION

MIL-PRF-38535 - Integrated Circuits (Microcircuits) Manufacturing, General Specification for.

DEPARTMENT OF DEFENSE STANDARDS

MIL-STD-883 - Test Method Standard Microcircuits.
MIL-STD-1835 - Interface Standard Electronic Component Case Outlines.

(Copies of these documents are available online at http://assist.daps.dla.mil/quicksearch/ or http://assist.daps.dla.mil/ or from the Standardization Document Order Desk, 700 Robbins Avenue, Building 4D, Philadelphia, PA 19111-5094.)

2.3 Order of precedence. In the event of a conflict between the text of this document and the references cited herein, the text of this document takes precedence. Nothing in this document, however, supersedes applicable laws and regulations unless a specific exemption has been obtained.

3. REQUIREMENTS

3.1 Qualification. Microcircuits furnished under this specification shall be products that are manufactured by a manufacturer authorized by the qualifying activity for listing on the applicable qualified manufacturers list before contract award (see 4.3 and 6.4).

3.2 Item requirements. The individual item requirements shall be in accordance with MIL-PRF-38535 and as specified herein or as modified in the device manufacturer's Quality Management (QM) plan. The modification in the QM plan shall not affect the form, fit, or function as described herein.

3.3 Design, construction, and physical dimensions. The design, construction, and physical dimensions shall be as specified in MIL-PRF-38535 and herein.

3.3.1 Terminal connections. The terminal connections shall be as specified on figure 1.

3.3.2 Logic diagram. The logic diagram shall be as specified on figure 2.

3.3.3 Truth tables. The truth tables shall be as specified on figure 3.

3.3.4 Switching time test circuit and waveforms. The switching time test circuit and waveforms shall be as specified on figure 4.

3.3.4 Schematic circuits. The schematic circuits shall be maintained by the manufacturer and made available to the qualifying activity or preparing activity upon request.

3.3.5 Case outlines. The case outlines shall be as specified in 1.2.3 herein.

3.4 Lead material and finish. The lead material and finish shall be in accordance with MIL-PRF-38535 (see 6.6).

3.5 Electrical performance characteristics. Unless otherwise specified, the electrical performance characteristics are as specified in table I, and apply over the full recommended ambient operating temperature range,.

3.6 Electrical test requirements. The electrical test requirements for each device class shall be the subgroups specified in table II. The electrical tests for each subgroup are described in table III.

3.7 Marking. Marking shall be in accordance with MIL-PRF-38535.

3.8 Microcircuit group assignment. The devices covered by this specification shall be in microcircuit group number 40 (see MIL-PRF-38535, appendix A).

4. VERIFICATION

4.1 Sampling and inspection. Sampling and inspection procedures shall be in accordance with MIL-PRF-38535 or as modified in the device manufacturer's Quality Management (QM) plan. The modification in the QM plan shall not affect the form, fit, or function as described herein.

4.2 Screening. Screening shall be in accordance with MIL-PRF-38535 and shall be conducted on all devices prior to qualification and conformance inspection. The following additional criteria shall apply:

a. The burn-in test duration, test condition, and test temperature, or approved alternatives shall be as specified in the device manufacturer's QM plan in accordance with MIL-PRF-38535. The burn-in test circuit shall be maintained under document control by the device manufacturer's Technology Review Board (TRB) in accordance with MIL-PRF-38535 and shall be made available to the acquiring or preparing activity upon request. The test circuit shall specify the inputs, outputs, biases, and power dissipation, as applicable, in accordance with the intent specified in method 1015 of MIL-STD-883.

b. Delete the sequence specified as interim (pre-burn-in) electrical parameters through interim (post-burn-in) electrical parameters of table IA of MIL-PRF-38535 and substitute lines 1 through 7 of table II herein.

c. Burn-in (method 1015 of MIL-STD-883).

(1) Unless otherwise specified in the manufacturers QM plan for static tests (test condition A), ambient temperature (T_A) shall be +125°C minimum. Test duration for each static test shall be 24 hours minimum for class S devices and in accordance with table I of method 1015 for class B devices.

i. For static burn-in I, all inputs shall be connected to GND. Outputs may be open or connected to $V_{CC}/2$. Resistors R1 are optional on both inputs and open outputs, and required on outputs connected to $V_{CC}/2$. R1 = 470Ω to 47 kΩ.

ii. For static burn-in II, all inputs shall be connected through the R1 resistors to V_{CC}. Outputs may be open or connected to $V_{CC}/2$. Resistors are optional on open outputs, and required on outputs connected to $V_{CC}/2$. R = 470Ω to 47 kΩ.

iii. V_{CC} = 6.0 V ±0.5 V.
$V_{CC}/2$ = $V_{CC}/2$ ±0.5 V.

(2) Unless otherwise specified in the manufacturers QM plan for dynamic test (test condition D), ambient temperature shall be +125°C minimum. Test duration shall be in accordance with table I of method 1015 of MIL-STD-883.

i. For dynamic burn-in, all inputs shall be connected through the resistors in parallel to a common CP. Input resistors = 470Ω to 47 kΩ ±20%.

ii Output resistors = 1 kΩ ±5%.

iii V_{CC} = 6.0 V ±0.5 V.

iv $V_{CC}/2 = V_{CC}/2$ ±0.5 V.

v CP = CP1, CP2 = CP1/2, CP = 25 kHz to 1 MHz ±50% square wave; duty cycle = 50% ±15%; V_{IH} = 4.5 V minimum to V_{CC} maximum; V_{IL} = 0.0 V ±0.5 V; t_{THL}, $t_{TLH} \leq$ 500 ns.

d. Interim and final electrical test parameters shall be as specified in table II.

e. For class S devices, post dynamic burn-in, or class B devices, post static burn-in, electrical parameter measurements may, at the manufacturer's option, be performed separately or included in the final electrical parameter requirements.

4.2.1 Percent defective allowable (PDA).

a. The PDA for class S devices shall be 5 percent for static burn-in and 5 percent for dynamic burn-in, based on the exact number of devices submitted to each separate burn-in.

b. Static burn-in I and II failure shall be cumulative for determining the PDA.

c. The PDA for class B devices shall be in accordance with MIL-PRF-38535 for static burn-in. Dynamic burn-in is not required.

d. Those devices whose measured characteristics, after burn-in, exceed the specified delta (Δ) limits or electrical parameter limits specified in table III, subgroup 1, are defective and shall be removed from the lot. The verified failures divided by the total number of devices in the lot initially submitted to burn-in shall be used to determine the percent defective for the lot and the lot shall be accepted or rejected based on the specified PDA.

4.3 Qualification inspection. Qualification inspection shall be in accordance with MIL-PRF-38535.

4.4 Technology Conformance inspection (TCI). Technology conformance inspection shall be in accordance with MIL-PRF-38535 and herein for groups A, B, C, and D inspections (see 4.4.1 through 4.4.4).

4.4.1 Group A inspection. Group A inspection shall be in accordance with table III of MIL-PRF-38535 and as follows:

a. Tests shall be performed in accordance with table II herein.

b. Subgroups 5 and 6 shall be omitted.

c. Subgroup 4 (C_{IN} and C_C measurements) shall be measured only for initial qualification and after process or design changes that may affect input capacitance. Capacitance shall be measured between the designated terminal and GND at a frequency of 1 MHz.

d. Subgroups 9 and 11 shall be measured only for initial qualification and after process or design changes, which may affect dynamic performance.

4.4.2 Group B inspection. Group B inspection shall be in accordance with table II of MIL-PRF-38535.

4.4.3 Group C inspection. Group C inspection shall be in accordance with table IV of MIL-PRF-38535 and as follows:

a. End-point electrical parameters shall be as specified in table II herein. Delta limits shall apply only to subgroup 1 of group C inspection and shall consist of tests specified in table IV herein.

b. The steady-state life test duration, test condition, and test temperature, or approved alternatives shall be as specified in the device manufacturer's QM plan in accordance with MIL-PRF-38535. The burn-in test circuit shall be maintained under document control by the device manufacturer's Technology Review Board (TRB) in accordance with MIL-PRF-38535 and shall be made available to the acquiring or preparing activity upon request. The test circuit shall specify the inputs, outputs, biases, and power dissipation, as applicable, in accordance with the intent specified in method 1005 of MIL-STD-883.

4.4.4 Group D inspection. Group D inspection shall be in accordance with table V of MIL-PRF-38535. End-point electrical parameters shall be as specified in table II herein.

TABLE I. Electrical performance characteristics.

Test	Symbol	Conditions 1/ -55°C ≤ T_C ≤ +125°C unless otherwise specified	Device type	V_{CC}	Limits		Unit
					Min	max	
High level output voltage	V_{OH1} 2/	V_{IH} = 1.5 V V_{IL} = 0.3 V I_{OH} = -20 μA	All	2.0V	1.95		V
	V_{OH2} 2/	V_{IH} = 3.15 V V_{IL} = 0.9 V I_{OH} = -20 μA	All	4.5V	4.45		V
	V_{OH3}	V_{IH} = 4.2 V V_{IL} = 1.2 V I_{OH} = -20 μA	All	6.0V	5.95		V
	V_{OH4} 2/	V_{IH} = 3.15 V V_{IL} = 0.9 V I_{OH} = -4.0 mA	All	4.5V	3.7		V
	V_{OH5}	V_{IH} = 4.2 V V_{IL} = 1.2 V I_{OH} = -5.2 mA	All	6.0V	5.2		V
Low level output voltage	V_{OL1} 2/	V_{IH} = 1.5 V V_{IL} = 0.3 V I_{OL} = 20 μA	All	2.0V		0.05	V
	V_{OL2} 2/	V_{IH} = 3.15 V V_{IL} = 0.9 V I_{OL} = 20 μA	All	4.5V		0.05	V
	V_{OL3}	V_{IH} = 4.2 V V_{IL} = 1.2 V I_{OL} = 20 μA	All	6.0V		0.05	V
	V_{OL4} 2/	V_{IH} = 3.15 V V_{IL} = 0.9 V I_{OL} = 4.0 mA	All	4.5V		0.4	V
	V_{OL5}	V_{IH} = 4.2 V V_{IL} = 1.2 V I_{OL} = 5.2 mA	All	6.0V		0.4	V
Positive input clamp voltage	V_{IC+}	I_{IN} = 1 mA T_C = +25°C	All	GND		1.5	V
Negative input clamp voltage	V_{IC-}	I_{IN} = -1 mA T_C = +25°C	All	OPEN		-1.5	V
Input current low	I_{IL}	V_{IN} = GND	All	6.0V		-0.1	μA
Input current high	I_{IH}	V_{IN} = V_{CC}	All	6.0V		0.1	μA
Short circuit output current	I_{OS1} 2/	V_O = GND V_I = GND	All	2.0V	-2	-50	mA
	I_{OS2} 2/		All	4.5V	-15	-150	
	I_{OS3} 2/		All	6.0V	-25	-180	
	I_{OS4}		All	4.0V	-10	-120	
Supply current quiescent	I_{CCH}, I_{CCL}	V_I = 6.0 V, GND	All	6.0V		20	μA
Input capacitance	C_{IN}	T_C = +25°C	01-07			10	pF
Clock, control capacitance	C_C		All			15	pF

See footnotes at end of table.

TABLE I. Electrical performance characteristics – Continued.

Test	Symbol	Conditions 1/ -55°C ≤ T_C ≤ +125°C unless otherwise specified	Device type	V_{CC}	Limits Min	Limits max	Unit
Device equivalent capacitance	C_{PD} 2/	No load, T_A = +25°C	01-04	4.5V		90	pF
			05-07	4.5V		100	pF
			08,09	4.5V		55	pF
			10	4.5V		110	pF
			11,13	4.5V		88	pF
			12	4.5V		55	pF
Propagation delay, clock to outputs	t_{PLH1}, t_{PHL1}	C_L = 50 pF ± 10% 3/ 4/	01-04	4.5V	8	48	ns
CLK to Q			05	4.5V	7	52	ns
U or D to Q			06,07	4.5V	11	64	ns
CLK A to QA			08	4.5V	4	34	ns
CLK A to QC			08	4.5V	9	68	ns
CLK B to QB			08	4.5V	4	36	ns
CLK B to QC			08	4.5V	5	49	ns
CLK B to QD			08	4.5V	4	36	ns
CLK to QA			09	4.5V	4	32	ns
CLK to QB			09	4.5V	6	45	ns
CLK to QC			09	4.5V	8	56	ns
CLK to QD			09	4.5V	9	73	ns
Propagation delay, CLK to N – carry out CLK to QN	t_{PHL1}, t_{PLH1}	C_L = 50 pF ± 10% 3/ 4/	10	4.5V	6	54	ns
			11,12,13	4.5V	5	49	ns
			12,13		10	98	ns
			12,13		15	147	ns
			11,12,13		20	196	ns
					25	245	ns
					30	294	ns
					35	343	ns
			11,13		40	392	ns
					45	441	ns
					50	490	ns
					55	539	ns
					60	588	ns
			11		65	637	ns
			11		70	686	ns
Propagation delay, clock to carry out	t_{PLH2}, t_{PHL2}		01-04	4.5V	8	50	ns
CLK to RCO			05	4.5V	5	35	ns
$\overline{U}$/D to RCO			06,07	4.5V	4	39	ns
Propagation delay, CLK to MIN/MAX	t_{PLH3}, t_{PHL3}		05	4.5V	8	60	ns

See footnotes at end of table.

TABLE I. Electrical performance characteristics – Continued.

Test	Symbol	Conditions 1/ -55°C ≤ T_C ≤ +125°C unless otherwise specified	Device type	V_{CC}	Limits Min	Limits max	Unit
Propagation delay, ENT to RCO	t_{PLH4}, t_{PHL4}	C_L = 50 pF ± 10% 3/ 4/	01-04	4.5V	7	46	ns
CE to carry-out			10	4.5V	6	54	ns
ENG to RCO			05	4.5V	6	47	ns
Propagation delay, LOAD to Q	t_{PLH5}, t_{PHL5}		05	4.5V	8	68	ns
			06,07	4.5V	12	68	ns
Propagation delay, A, B, C, and D to Q	t_{PLH6}, t_{PHL6}		05	4.5V	7	56	ns
Propagation delay, U/D to MIN/MAX	t_{PLH7}, t_{PHL7}		05	4.5V	6	44	ns
Propagation delay, U/D to $\overline{RCO}$	t_{PLH8}, t_{PHL8}		05	4.5V	8	54	ns
Propagation delay, $\overline{CLR}$ to Q	t_{PHL9}		01,02	4.5V	8	53	ns
			06,07	4.5V	11	62	ns
Propagation delay, CLR to QN	t_{PHL9}		08,09	4.5V	5	39	ns
			11,13	4.5V	6	56	ns
			12	4.5V	5	49	ns
Propagation delay, CLR to N – carry out	t_{PHL9}, t_{PLH9}		10	4.5V	6	54	ns
Propagation delay, $\overline{CLR}$ to RCO	t_{PHL10}		01,02	4.5V	8	51	ns
Propagation delay, Qn to Qn+1	t_{PHL11}, t_{PLH11}		11-13	4.5V	4	29	ns
Output transition time	t_{TLH}, t_{THL}		All	4.5V	3	20	ns
Maximum frequency test	f_{MAX}	C_L = 50 pF ± 10% 50% duty cycle 3/ 4/	01-04, 09	4.5V	21		MHz
			05	4.5V	17		MHz
			06,07	4.5V	14		MHz
			08	4.5V	23		MHz
			10	4.5V	17		MHz
			11-13	4.5V	21		MHz

1/ Complete terminal conditions shall be as specified in table III.
2/ Guaranteed but not tested.
3/ Tested at V_{CC} = 4.5 V at +125°C for sample testing and V_{CC} = 4.5 V at +25°C for screening. Guaranteed at other V_{CC} voltages and temperatures, see table IA and IB as appropriate and the exception in 4.4.1d.
4/ See the formula for determining switching times and maximum frequencies shown in tables IA and IB, respectively.

TABLE IA. Calculated dynamic figures at –55°C/+25°C ambient temperature.

V_{CC}	T_A = (°C)	
	+125	-55/+25
2.0 V 1/	5.00 X	5.00 Y
4.5 V	X = 1	0.75 X = Y
6.0 V 1/	0.85 X	0.85 Y

Normalized numbers
(+125°C equals 1)

1/ The 2.0 V and 6.0 V numbers are derived from their 4.5 V integer value. Rounding off according 5/4.

TABLE IB. Calculated f_{MAX} figures at –55°C /+25°C ambient temperature.

V_{CC}	T_A = (°C)	
	+125	-55/+25
2.0 V 1/	0.2 X	0.2 Y
4.5 V	X = 1	1.33 X = Y
6.0 V 1/	1.18 X	1.18 Y

Normalized numbers
(+125°C equals 1)

1/ The 2.0 V and 6.0 V numbers are derived from their 4.5 V integer value. Rounding off according 5/4.

TABLE II. Burn-in and electrical test requirements.

Line no.	MIL-PRF-38535 test requirements	Class S device 1/			Class B device 1/		
		Ref. par.	Table III Subgroups 2/	Table IV delta limits 3/	Ref. par.	Table III subgroups 2/	Table IV delta 3/
1	Interim electrical parameters		1			1	
2	Static burn-in I (method 1015)	4.2c 4.5.2	Req'd			Not req'd	
3	Same as line 1		1*	Δ			
4	Static burn-in II (method 1015)	4.2c 4.5.2	Req'd		4.2c 4.5.2	req'd 4/	
5	Same as line 1	4.2e	1*	Δ	4.2e	1*	Δ
6	Dynamic burn-in (method 1015)	4.2c 4.5.2	Req'd			Not req'd	
7	Same as line 1	4.2e	1	Δ			
8	Final electrical parameters		1*, 2, 3, 7, 8, 9			1*, 2, 7, 9 4/	
9	Group A test requirements	4.4.1	1, 2, 3, 4, 7, 8, 9, 10, 11		4.4.1	1, 2, 3, 4, 7, 8, 9, 10, 11	
10	Group B test when using method 5005 QCI option	4.4.2	1, 2, 3, 7, 8, 9, 10, 11	Δ			
11	Group C end-point electrical parameters	4.4.2	1, 2, 3, 7, 8, 9, 10, 11	Δ	4.4.3	1, 2	Δ
12	Group D end-point electrical parameters	4.4.4	1, 2, 3		4.4.4	1, 2	

1/ Blank spaces indicate tests are not applicable.

2/ * indicates PDA applies to subgroup 1 (see 4.2.1).

3/ Δ indicates delta limits shall be required only on table III, subgroup 1, where specified, and the delta values shall be computed with reference to the previous interim electrical parameters.

4/ The device manufacturer may, at his option, either complete subgroup 1 electrical parameter measurements, including delta measurements, within 96 hours after burn-in completion (removal of bias); or may complete subgroup 1 electrical measurement without delta measurements within 24 hours after burn-in completion (removal of bias).

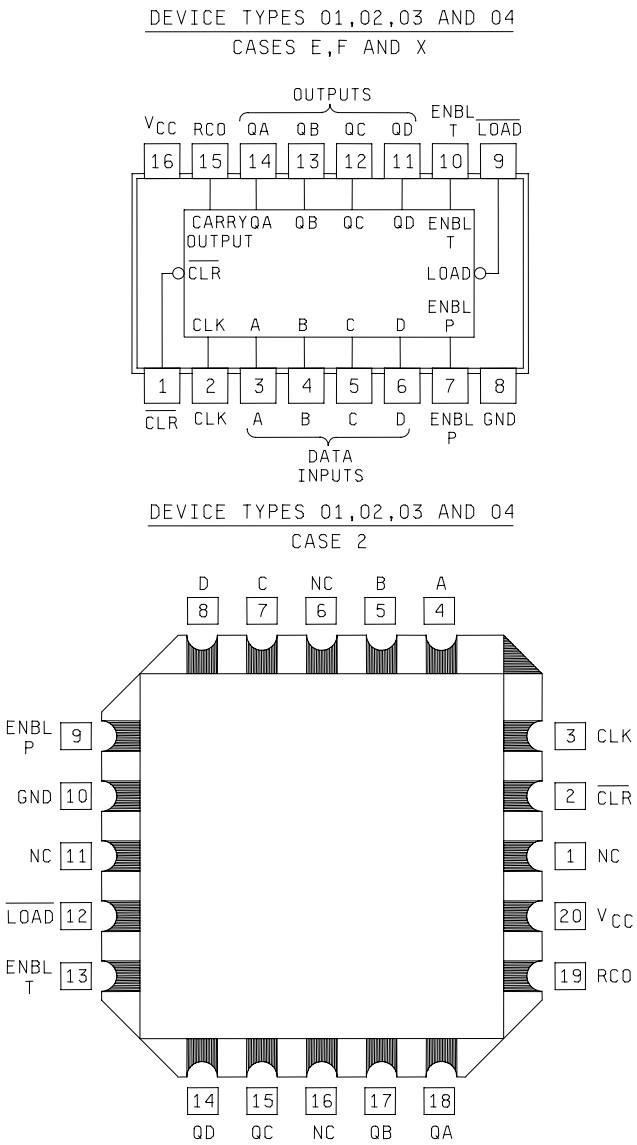

FIGURE 1. Terminal connections.

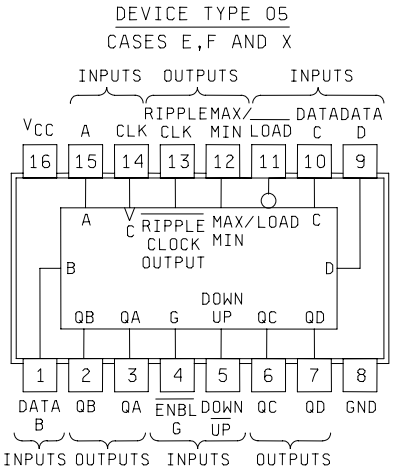

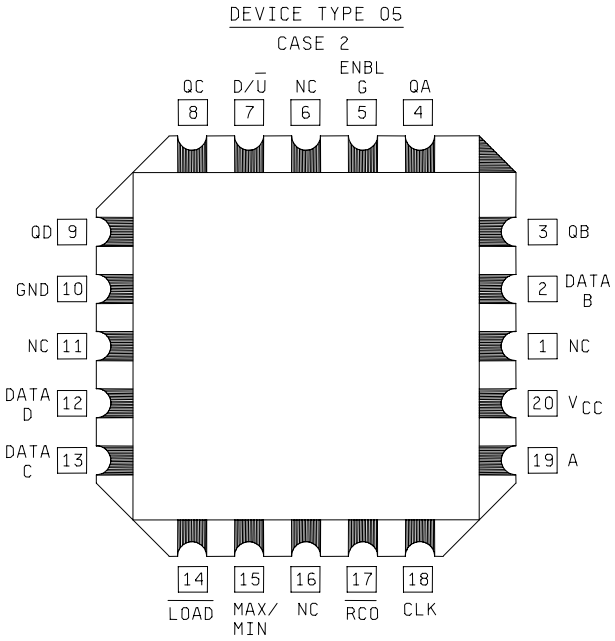

FIGURE 1. Terminal connections - Continued.

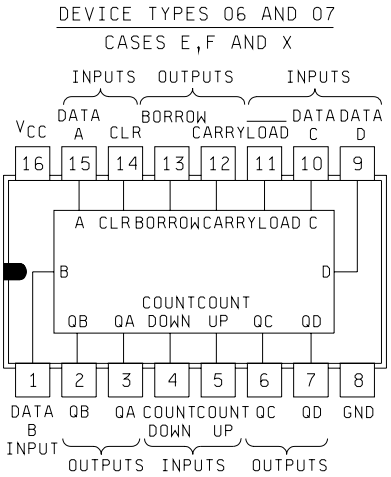

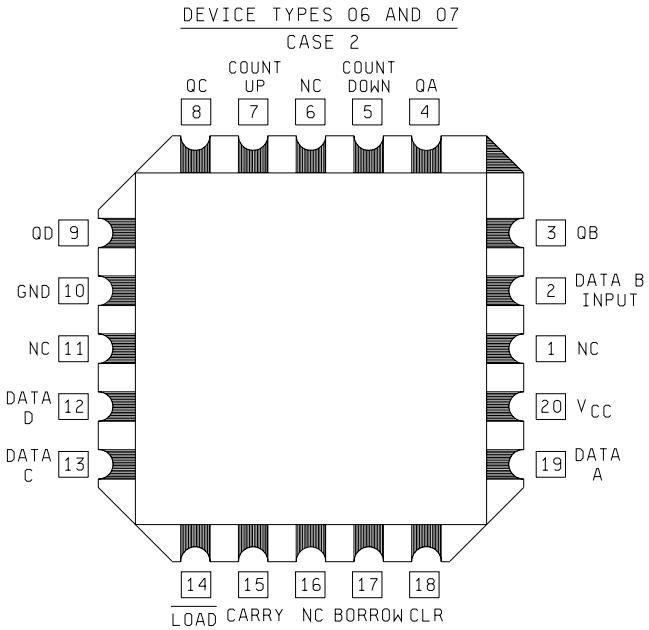

FIGURE 1. Terminal connections - Continued.

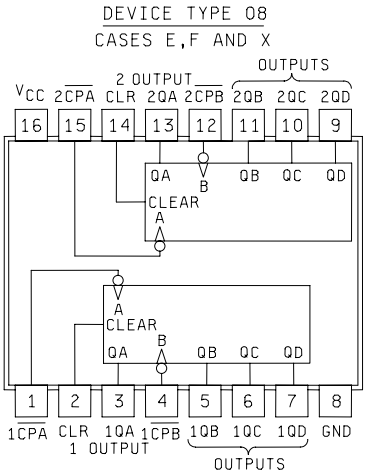

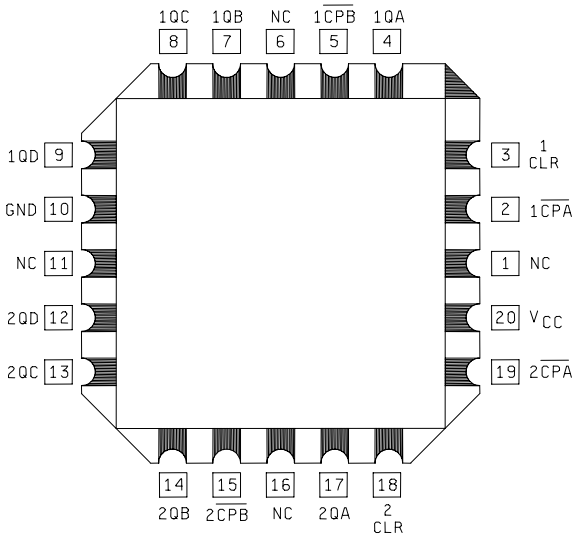

FIGURE 1. Terminal connections - Continued.

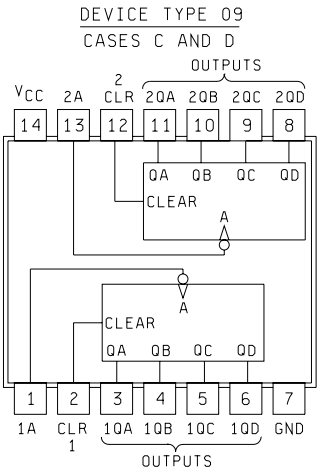

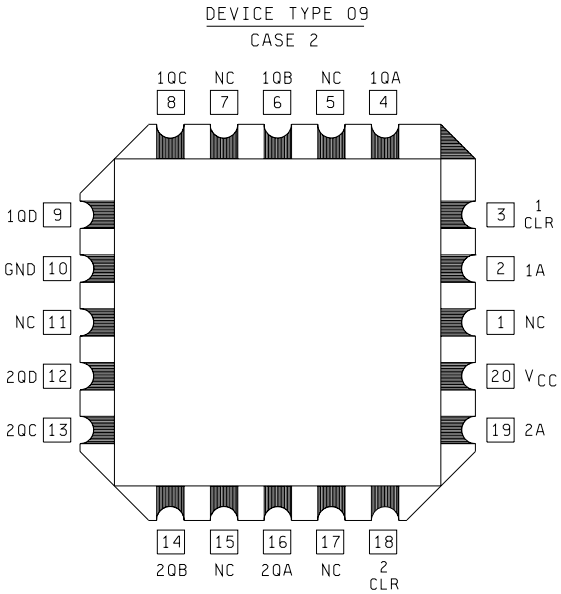

FIGURE 1. Terminal connections - Continued.

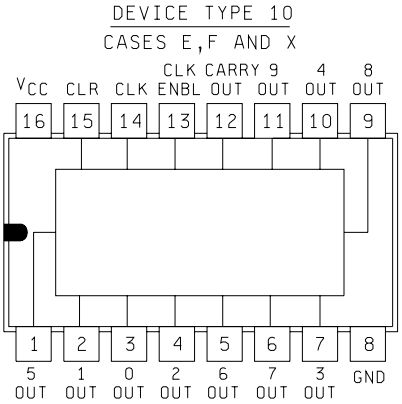

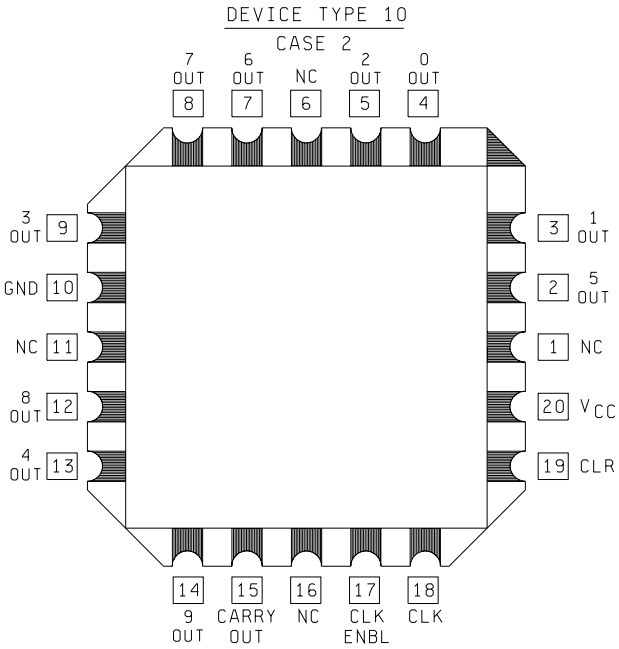

FIGURE 1. Terminal connections - Continued.

DEVICE TYPE 11
CASES E,F AND X

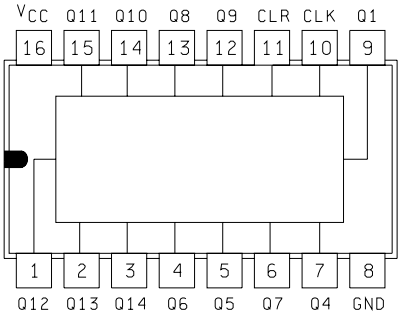

DEVICE TYPE 11
CASE 2

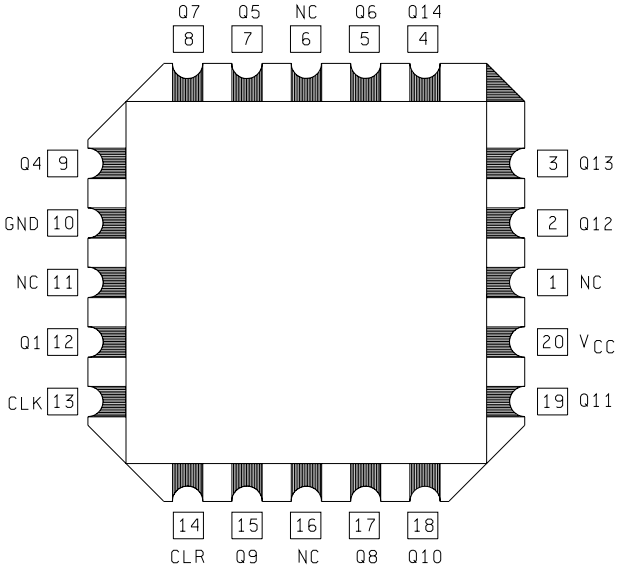

FIGURE 1. Terminal connections - Continued.

DEVICE TYPE 12
CASES C AND D

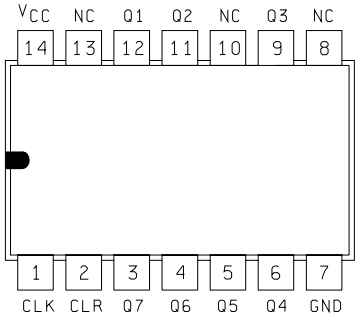

DEVICE TYPE 12
CASE 2

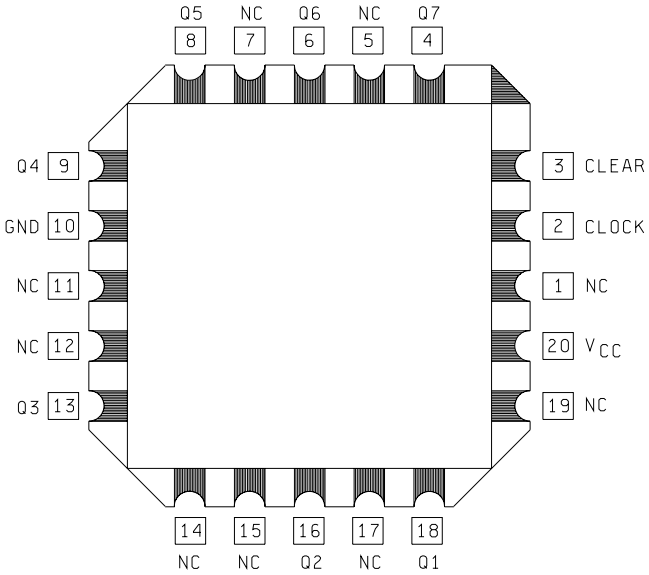

FIGURE 1. Terminal connections - Continued.

DEVICE TYPE 13
CASES E,F AND X

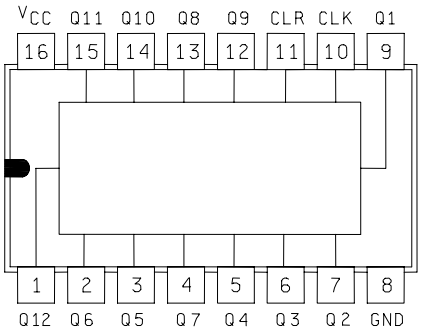

DEVICE TYPE 13
CASE 2

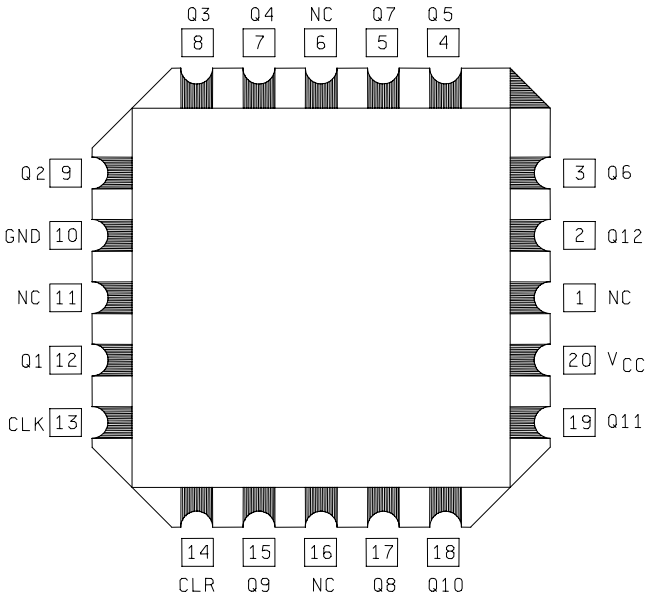

FIGURE 1. Terminal connections - Continued.

DEVICE TYPE 01

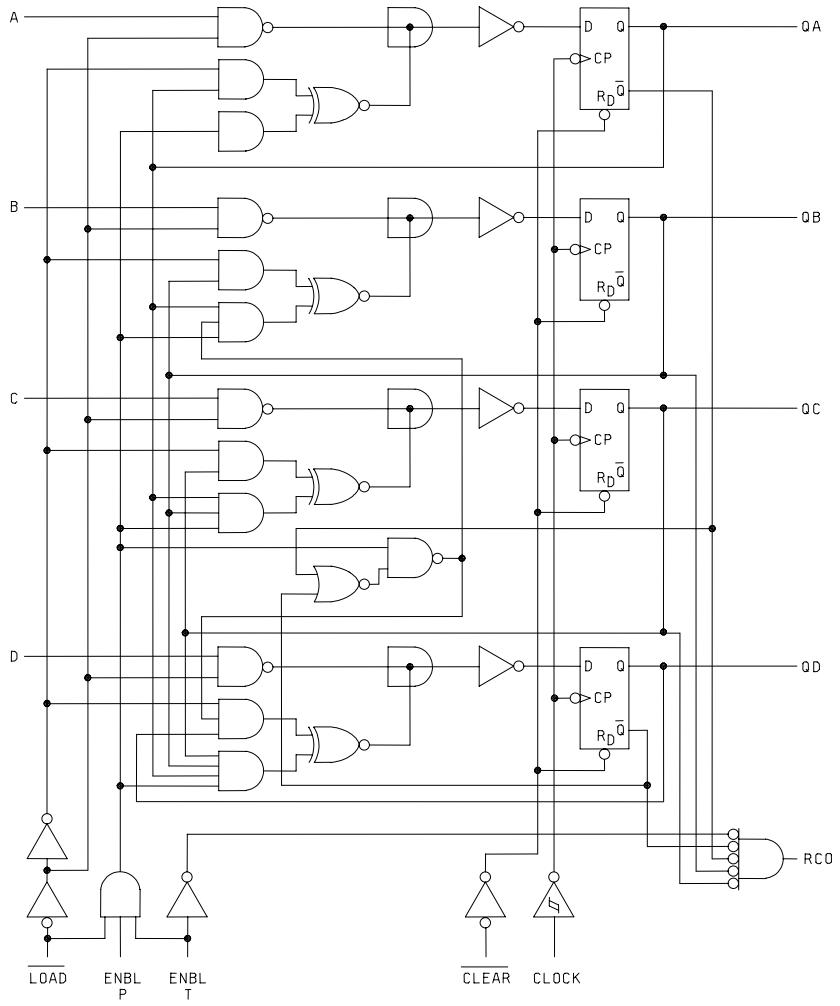

FIGURE 2. Logic diagrams.

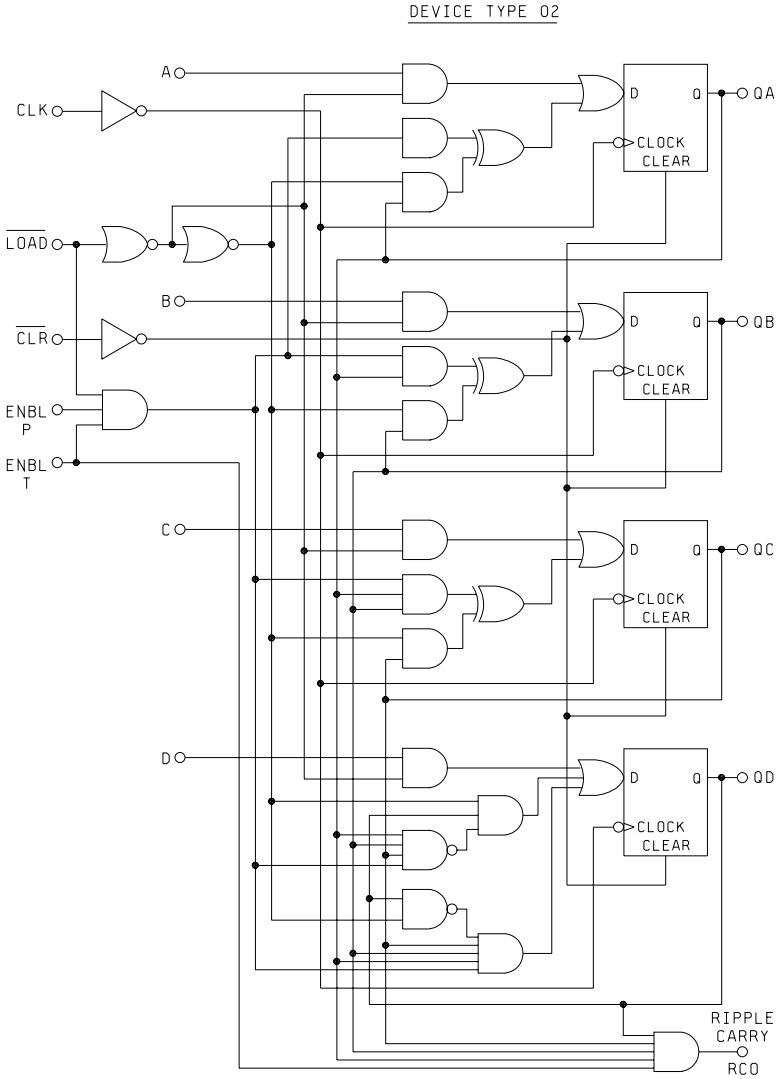

FIGURE 2. Logic diagrams – Continued.

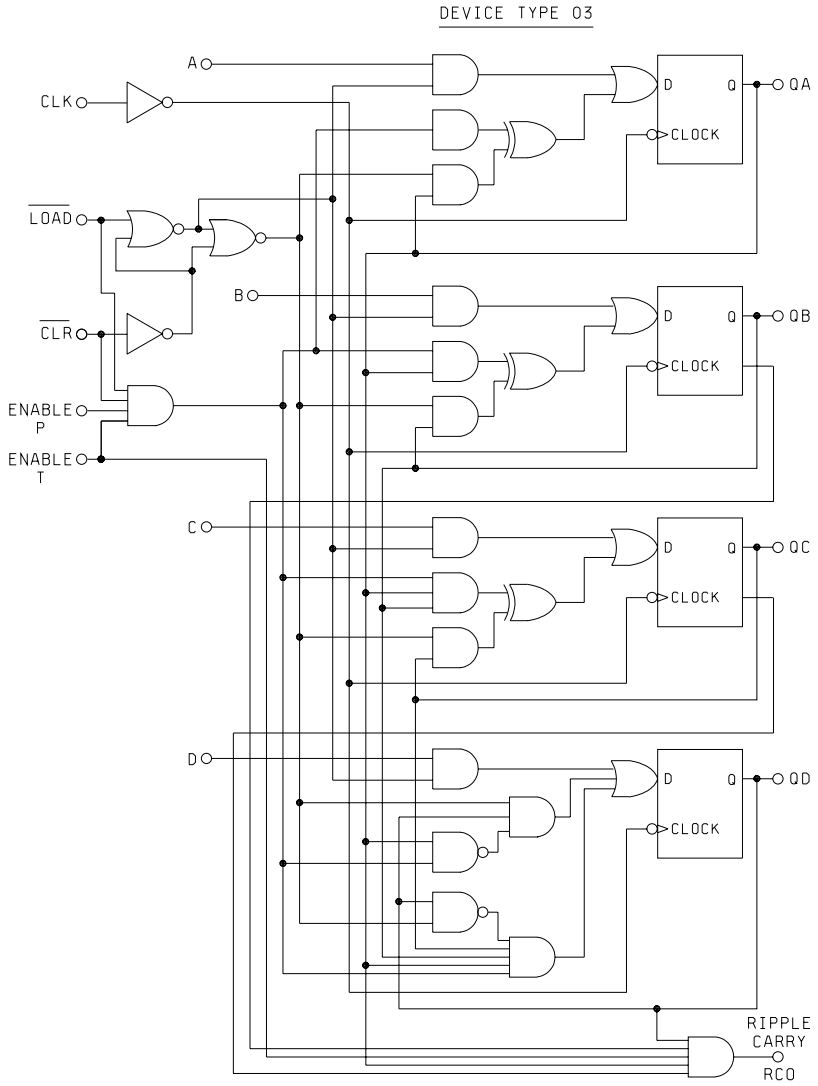

FIGURE 2. Logic diagrams – Continued.

DEVICE TYPE 04

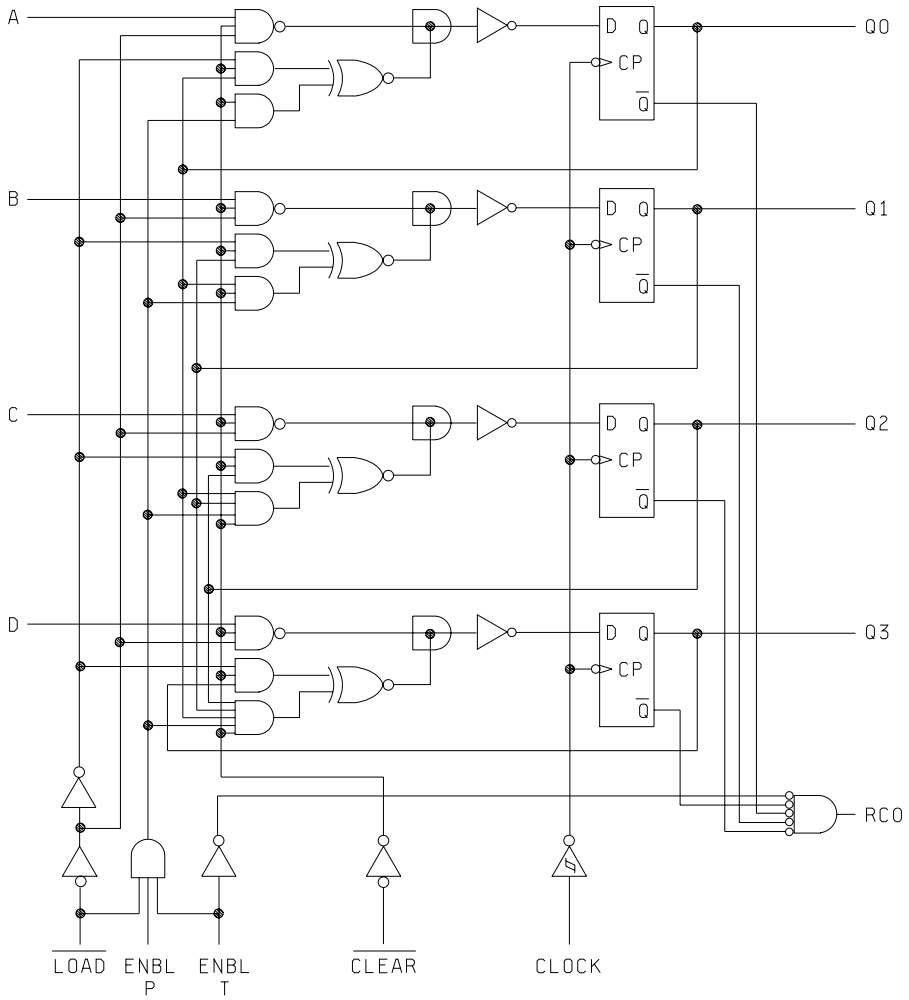

FIGURE 2. Logic diagrams – Continued.

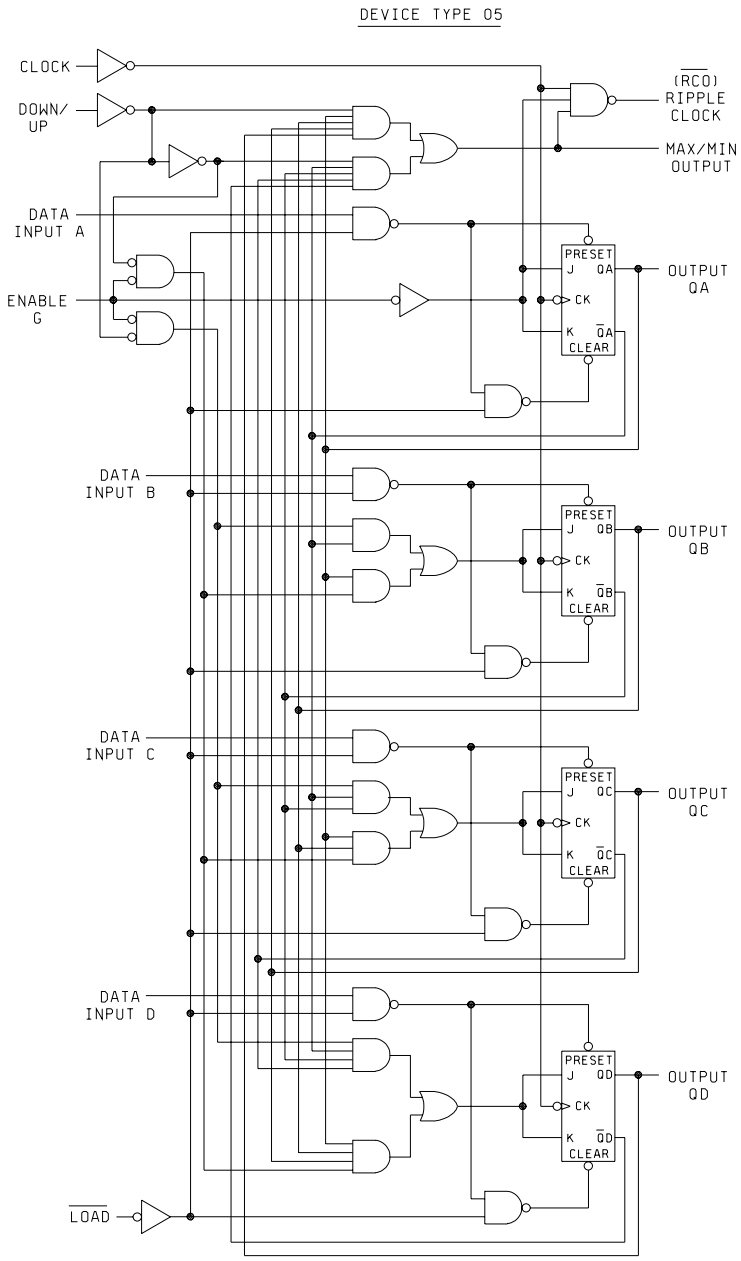

FIGURE 2. Logic diagrams – Continued.

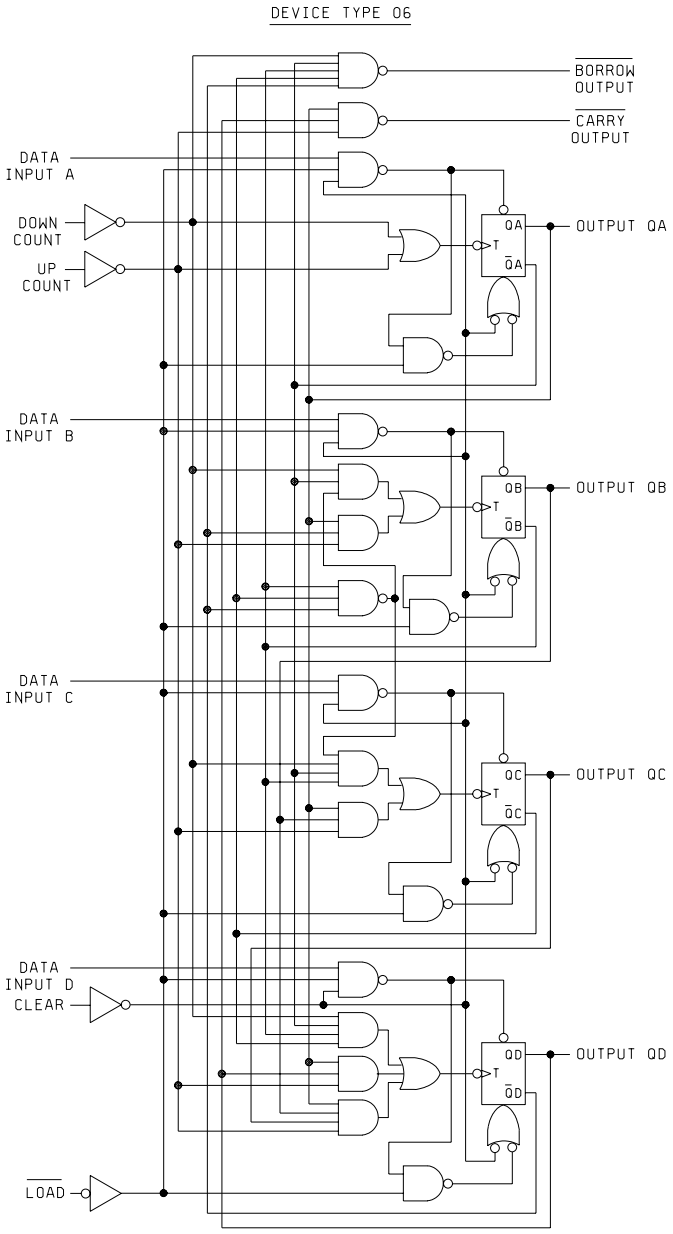

FIGURE 2. Logic diagrams – Continued.

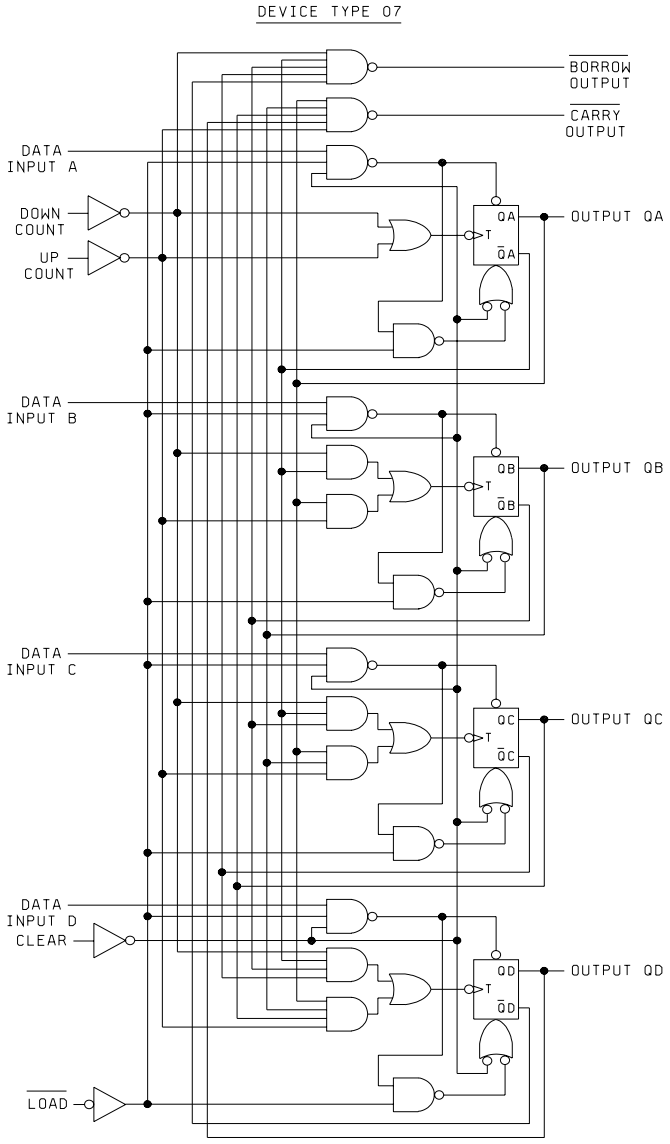

FIGURE 2. Logic diagrams – Continued.

DEVICE TYPE 08

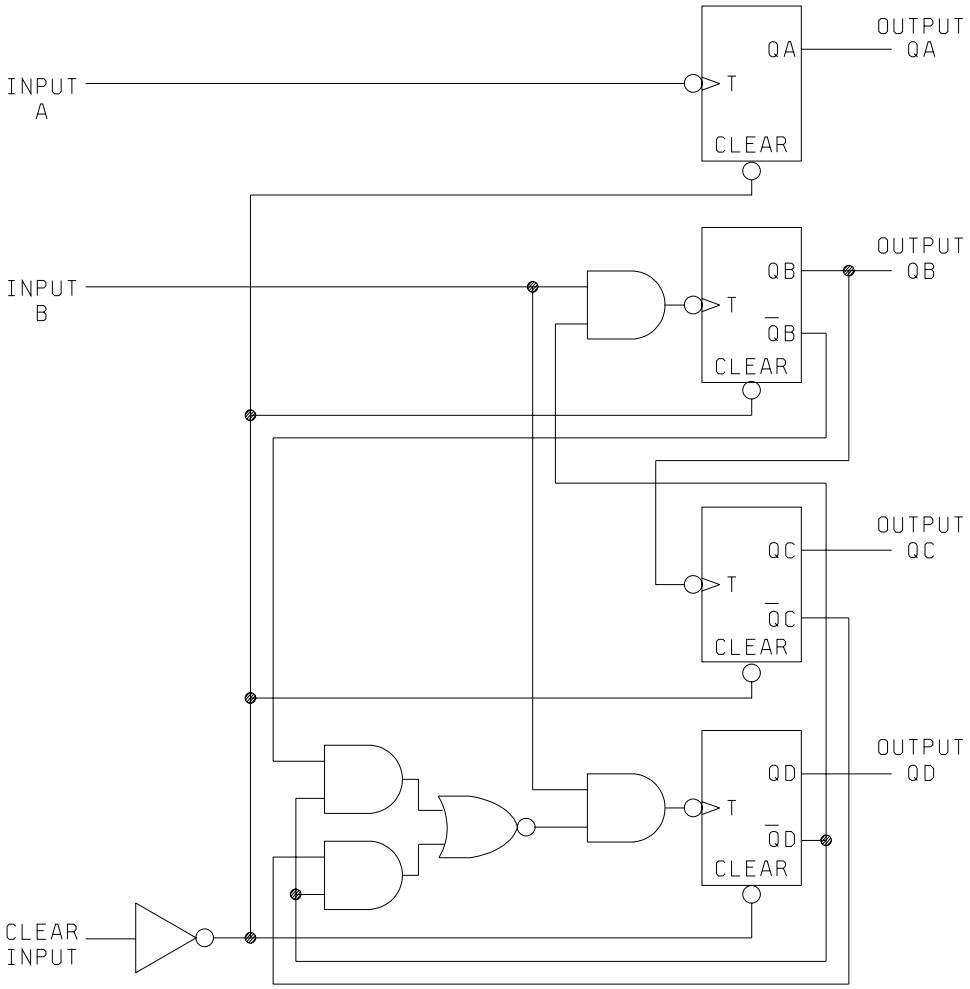

FIGURE 2. Logic diagrams – Continued.

DEVICE TYPE 09

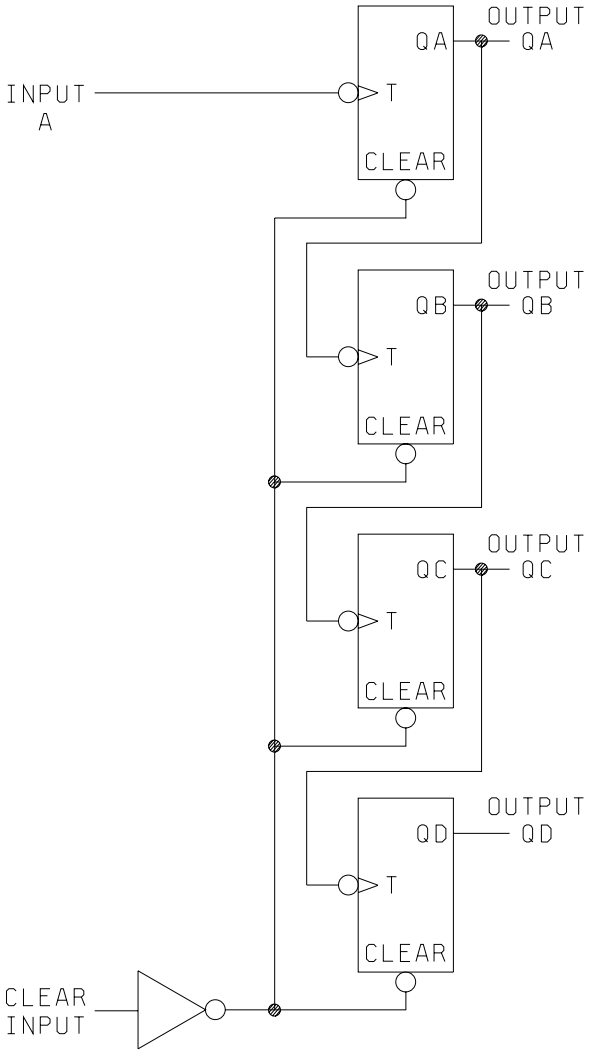

FIGURE 2. Logic diagrams – Continued.

DEVICE TYPE 10

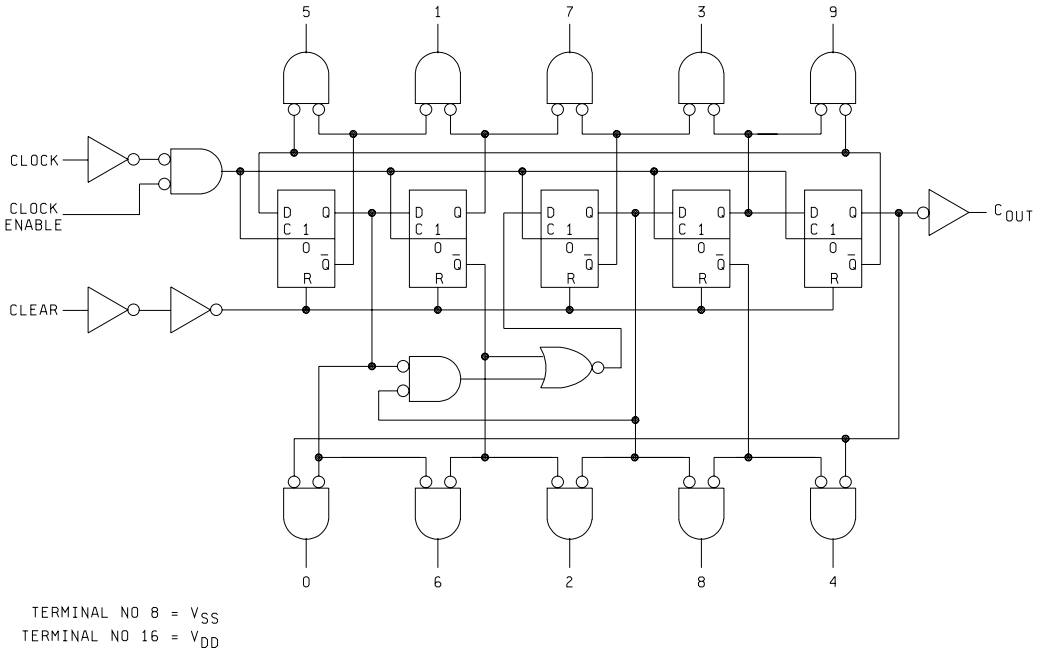

FIGURE 2. Logic diagrams – Continued.

DEVICE TYPE 11

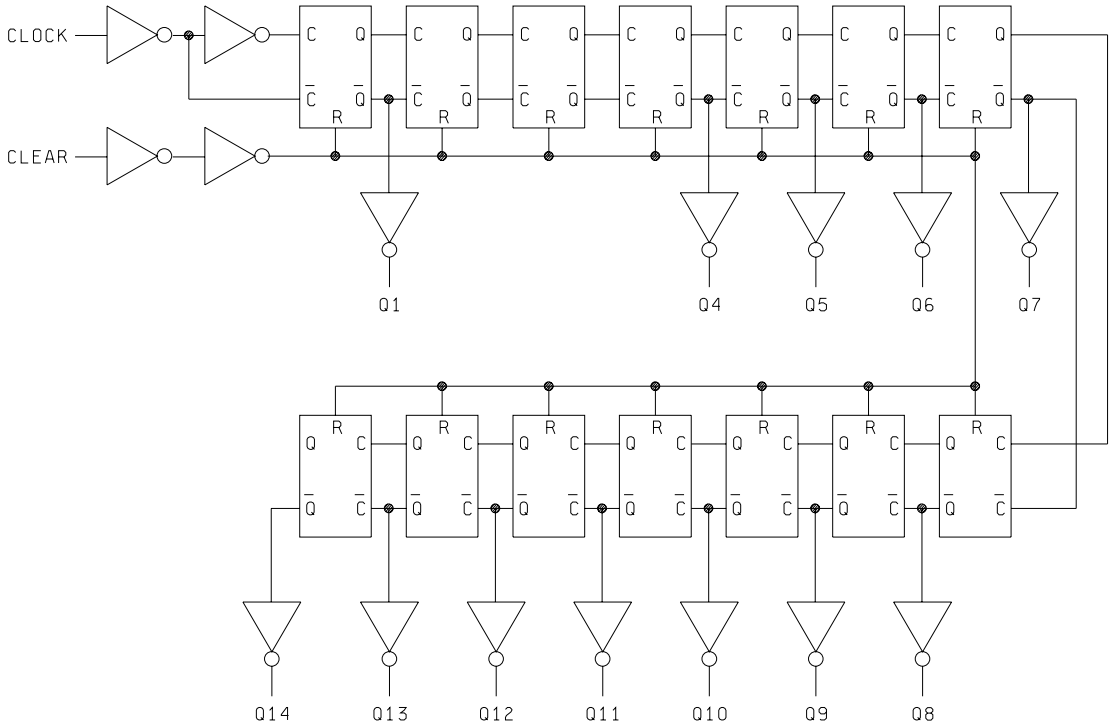

FIGURE 2. Logic diagrams – Continued.

DEVICE TYPE 12

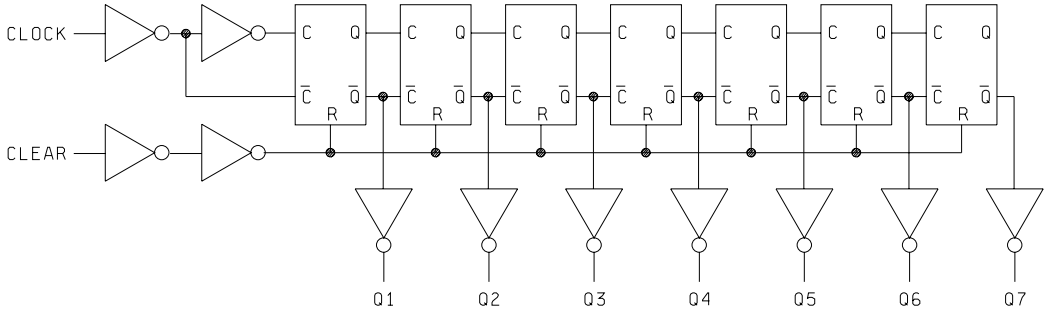

DEVICE TYPE 13

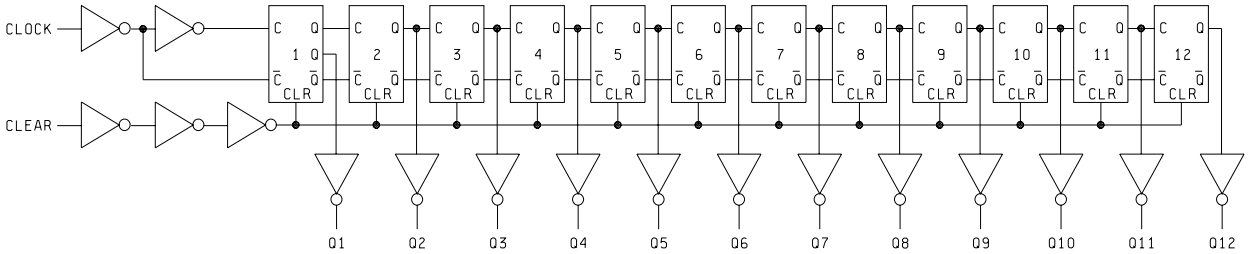

FIGURE 2. Logic diagrams – Continued.

Device type 01

Synchronous truth table

Inputs at time t_n									Outputs at time t_n +1				
CLOCK	ENABLE P	ENABLE T	$\overline{LOAD}$	A	B	C	D	$\overline{CLEAR}$	QA	QB	QC	QD	$\overline{RCO}$
CP	L	X	H	X	X	X	X	H	NC	NC	NC	NC	NC
CP	X	L	H	X	X	X	X	H	NC	NC	NC	NC	L
CP	H	H	H	X	X	X	X	H	Previous count plus 1 (See note 1)				H if count = 9 L if count < 9
CP	X	H	L	X	X	X	X	H	A	B	C	D	H if count = 9 L if count < 9
CP	X	L	L	X	X	X	X	H	A	B	C	D	L
X	X	X	X	X	X	X	X	L	L	L	L	L	L

Device type 01

Asynchronous truth table

Inputs at time t_n									Outputs at time t_n +1				
CLOCK	ENABLE P	ENABLE T	$\overline{LOAD}$	A	B	C	D	$\overline{CLEAR}$	QA	QB	QC	QD	$\overline{RCO}$
X	X	X	X	X	X	X	X	L	L	L	L	L	L

H = High level voltage
L = Low level voltage
X = Irrelevant

FIGURE 3. Truth tables.

Device type 01

Up count sequence table

QA (LBS)	QB	QC	QD (MSB)
L	L	L	L
H	L	L	L
L	H	L	L
H	H	L	L
L	L	H	L
H	L	H	L
L	H	H	L
H	H	H	L
L	L	L	H
H	L	L	H

NOTES:

1. See up count sequence table.
2. L = V_{IL} for inputs, V_{OL} for outputs.
3. H = V_{IH} for inputs, V_{OH} for outputs.
4. X = V_{IH} or V_{IL}.
5. CP = Clock pulse.
6. NC = No change.

FIGURE 3. Truth tables – Continued.

Device type 02

Synchronous truth table

Inputs at time t_n									Outputs at time t_n+1				
CLOCK	ENABLE P	ENABLE T	$\overline{LOAD}$	A	B	C	D	$\overline{CLEAR}$	QA	QB	QC	QD	$\overline{RCO}$
CP	L	X	H	X	X	X	X	H	NC	NC	NC	NC	NC
CP	X	L	H	X	X	X	X	H	NC	NC	NC	NC	L
CP	H	H	H	X	X	X	X	H	Previous count plus 1 (See note 1)				H if count = 15 L if count < 15
CP	X	H	L	X	X	X	X	H	A	B	C	D	H if count = 15 L if count < 15
CP	X	L	L	X	X	X	X	H	A	B	C	D	L
X	X	X	X	X	X	X	X	L	L	L	L	L	L

Device type 02

Asynchronous truth table

Inputs at time t_n									Outputs at time t_n+1				
CLOCK	ENABLE P	ENABLE T	$\overline{LOAD}$	A	B	C	D	$\overline{CLEAR}$	QA	QB	QC	QD	$\overline{RCO}$
X	L	X	X	X	X	X	X	L	L	L	L	L	L

H = High level voltage
L = Low level voltage
X = Irrelevant

FIGURE 3. Truth tables – Continued.

Device type 02

Up count sequence table

QA (LBS)	QB	QC	QD (MSB)
L	L	L	L
H	L	L	L
L	H	L	L
H	H	L	L
L	L	H	L
H	L	H	L
L	H	H	L
H	H	H	L
L	L	L	H
H	L	L	H
L	H	L	H
H	H	L	H
L	L	H	H
H	L	H	H
L	H	H	H
H	H	H	H

NOTES:

1. See up count sequence table.
2. L = V_{IL} for inputs, V_{OL} for output.
3. H = V_{IH} for inputs, V_{OH} for outputs.
4. X = V_{IH} or V_{IL}.
5. CP = Clock pulse.
6. NC = No change.

FIGURE 3. Truth tables – Continued.

Device type 03

Synchronous truth table

Inputs at time t_n									Outputs at time t_n+1				
CLOCK	ENABLE P	ENABLE T	$\overline{LOAD}$	A	B	C	D	$\overline{CLEAR}$	QA	QB	QC	QD	$\overline{RCO}$
CP	L	X	H	X	X	X	X	H	NC	NC	NC	NC	NC
CP	X	L	H	X	X	X	X	H	NC	NC	NC	NC	L
CP	H	H	H	X	X	X	X	H	Previous count plus 1 (See note 1)				H if count = 9 L if count < 9
CP	X	H	L	X	X	X	X	H	A	B	C	D	H if count = 9 L if count < 9
CP	X	L	L	X	X	X	X	H	A	B	C	D	L
CP	X	X	X	X	X	X	X	L	L	L	L	L	L

Up count sequence table

QA (LBS)	QB	QC	QD (MSB)
L	L	L	L
H	L	L	L
L	H	L	L
H	H	L	L
L	L	H	L
H	L	H	L
L	H	H	L
H	H	H	L
L	L	L	H
H	L	L	H

NOTES:

1. See up count sequence table.
2. L = V_{IL} for inputs, V_{OL} for output.
3. H = V_{IH} for inputs, V_{OH} for outputs.
4. X = V_{IH} or V_{IL}.
5. CP = Clock pulse.
6. NC = No change.

FIGURE 3. Truth tables – Continued.

Device type 04

Synchronous truth table

Inputs at time t_n									Outputs at time t_n+1				
CLOCK	ENABLE P	ENABLE T	$\overline{LOAD}$	A	B	C	D	$\overline{CLEAR}$	QA	QB	QC	QD	$\overline{RCO}$
CP	L	X	H	X	X	X	X	H	NC	NC	NC	NC	NC
CP	X	L	H	X	X	X	X	H	NC	NC	NC	NC	L
CP	H	H	H	X	X	X	X	H	Previous count plus 1 (See note 1)				H if count = 15 L if count < 15
CP	X	H	L	X	X	X	X	H	A	B	C	D	H if count = 15 L if count < 15
CP	X	L	L	X	X	X	X	H	A	B	C	D	L
CP	X	X	X	X	X	X	X	L	L	L	L	L	L

FIGURE 3. Truth tables – Continued.

Device type 04

Up count sequence table

QA (LBS)	QB	QC	QD (MSB)
L	L	L	L
H	L	L	L
L	H	L	L
H	H	L	L
L	L	H	L
H	L	H	L
L	H	H	L
H	H	H	L
L	L	L	H
H	L	L	H
L	H	L	H
H	H	L	H
L	L	H	H
H	L	H	H
L	H	H	H
H	H	H	H

NOTES:

1. See up count sequence table.
2. L = V_{IL} for inputs, V_{OL} for output.
3. H = V_{IH} for inputs, V_{OH} for outputs.
4. X = V_{IH} or V_{IL}.
5. CP = Clock pulse.
6. NC = No change.

FIGURE 3. Truth tables – Continued.

Device type 05

Mode select table

Inputs				Mode
LOAD	$\overline{\text{ENABLE G}}$	$\overline{\text{U}}$/D	CLK	
H	L	L	↑	Count up
H	L	H	↑	Count down
L	X	X	X	Preset (Asynchronous)
H	H	X	X	No change (Hold)

Ripple carry truth table

Inputs		Outputs	
$\overline{\text{ENABLE G}}$	CLOCK	Max/Min	$\overline{\text{RCO}}$
L	↓	H	↓
H	X	X	H
X	X	L	H

H = High level voltage
L = Low level voltage
X = Irrelevant
↑ = Low-to-high clock transition
↓ = Negative-going clock pulse

NOTE: The up count and down count sequence for device type 05 is identical as that for device type 07.

FIGURE 3. Truth tables – Continued.

Device type 06

Inputs at time t_n								Outputs at time t_n +1					
Count up	Count down	$\overline{\text{LOAD}}$	A	B	C	D	CLEAR	QA	QB	QC	QD	$\overline{\text{CARRY}}$	$\overline{\text{BORROW}}$
H	H	H	X	X	X	X	L	NC	NC	NC	NC	H	H
X	X	X	X	X	X	X	H	L	L	L	L	H	H
X	X	L	X	X	X	X	L	A	B	C	D	H	H
P	H	H	X	X	X	X	L	Previous count plus 1 (See note 1)				H	H
H	P	H	X	X	X	X	L	Previous count minus 1 (See note 2)				H	H
N	H	H	X	X	X	X	L	NC	NC	NC	NC	N if count = 9 H if count ≠ 9	
H	N	H	X	X	X	X	L	NC	NC	NC	NC		N if count = 9 H if count ≠ 9

NOTES:

1. See up count sequence table.
2. See down count sequence table.
3. L = V_{IL} for inputs, V_{OL} for outputs.
4. H = V_{IH} for inputs, V_{OH} for outputs.
5. X = V_{IH} or V_{IL}.
6. NC = No change.
7. NA = Not applicable.
8. P = Positive-going pulse.
9. N = Negative-going pulse.

FIGURE 3. Truth tables – Continued.

Device type 06

Up count sequence table

QA (LSB)	QB	QC	QD	$\overline{\text{CARRY}}$
L	L	L	L	H
H	L	L	L	H
L	H	L	L	H
H	H	L	L	H
L	L	H	L	H
H	L	H	L	H
L	H	H	L	H
H	H	H	L	H
L	L	L	H	H
H	L	L	H	L

Down count sequence table

QA (LSB)	QB	QC	QD (MSB)	$\overline{\text{BORROW}}$
H	L	L	H	H
L	L	L	H	H
H	H	H	L	H
L	H	H	L	H
H	L	H	L	H
L	L	H	L	H
H	H	L	L	H
L	H	L	L	H
H	L	L	L	H
L	L	L	L	L

FIGURE 3. Truth tables – Continued.

Device type 07

Inputs at time t_n								Outputs at time t_n +1					
Count up	Count down	$\overline{LOAD}$	A	B	C	D	CLEAR	QA	QB	QC	QD	$\overline{CARRY}$	$\overline{BORROW}$
H	H	H	X	X	X	X	L	NC	NC	NC	NC	H	H
X	X	X	X	X	X	X	H	L	L	L	L	H	H
X	X	L	X	X	X	X	L	A	B	C	D	H	H
P	H	H	X	X	X	X	L	Previous count plus 1 (See note 1)				H	H
H	P	H	X	X	X	X	L	Previous count minus 1 (See note 2)				H	H
N	H	H	X	X	X	X	L	NC	NC	NC	NC	N if count = 15 H if count ≠ 15	
H	N	H	X	X	X	X	L	NC	NC	NC	NC		N if count = 0 H if count ≠ 0

NOTES:

1. See up count sequence table.
2. See down count sequence table.
3. L = V_{IL} for inputs, V_{OL} for outputs.
4. H = V_{IH} for inputs, V_{OH} for outputs.
5. X = V_{IH} or V_{IL}.
6. NC = No change.
7. NA = Not applicable.
8. P = Positive-going pulse.
9. N = Negative-going pulse.

FIGURE 3. Truth tables – Continued.

Device type 07

Up count sequence table

QA (LSB)	QB	QC	QD	$\overline{\text{CARRY}}$
L	L	L	L	H
H	L	L	L	H
L	H	L	L	H
H	H	L	L	H
L	L	H	L	H
H	L	H	L	H
L	H	H	L	H
H	H	H	L	H
L	L	L	H	H
H	L	L	H	H
L	H	L	H	H
H	H	L	H	H
L	L	H	H	H
H	L	H	H	H
L	H	H	H	H
H	H	H	H	L

Down count sequence table

QA (LSB)	QB	QC	QD (MSB)	$\overline{\text{BORROW}}$
H	H	H	H	H
L	H	H	H	H
H	L	H	H	H
L	L	H	H	H
H	H	L	H	H
L	H	L	H	H
H	L	L	H	H
L	L	L	H	H
H	H	H	L	H
L	H	H	L	H
H	L	H	L	H
L	L	H	L	H
H	H	L	L	H
L	H	L	L	H
H	L	L	L	H
L	L	L	L	L

FIGURE 3. Truth tables – Continued.

Device type 08

BCD count sequence
(See note 1)

Count	Outputs			
	QD	QC	QB	QA
0	L	L	L	L
1	L	L	L	H
2	L	L	H	L
3	L	L	H	H
4	L	H	L	L
5	L	H	L	H
6	L	H	H	L
7	L	H	H	H
8	H	L	L	L
9	H	L	L	H

Bi-quinary (5-2)
(See note 2)

Count	Outputs			
	QA	QD	QC	QB
0	L	L	L	L
1	L	L	L	H
2	L	L	H	L
3	L	L	H	H
4	L	H	L	L
5	H	L	L	L
6	H	L	L	H
7	H	L	H	L
8	H	L	H	H
9	H	H	L	L

NOTES:
1. Output QA is connected to input B for BCD count.
2. Output QD is connected to input A for bi-quinary count.

Device type 09

Count sequence

Count	Outputs			
	QD	QC	QB	QA
0	L	L	L	L
1	L	L	L	H
2	L	L	H	L
3	L	L	H	H
4	L	H	L	L
5	L	H	L	H
6	L	H	H	L
7	L	H	H	H
8	H	L	L	L
9	H	L	L	H
10	H	L	H	L
11	H	L	H	H
12	H	H	L	L
13	H	H	L	H
14	H	H	H	L
15	H	H	H	H

FIGURE 3. Truth tables – Continued.

Device type 10

Input				Outputs			
CLOCK	CLOCK ENABLE	CLEAR	Dn-1 On chip	Qn	Nn	“On	
X	H	L	X	Qn-1	Nn-1	“On-1	(No change)
X	X	H	X	L	L	H	
↓	X	L	X	Qn-1	Nn-1	“On-1	(No change)
↑	L	L	L	L	N-1n-1	“9n-1	
↑	L	L	H	H	N-1n-1	“9n-1	

Device type 11

CLOCK	CLEAR	Output state
↑	L	No change
↓	L	Advance to next state
X	H	All outputs are low

Device type 12

CLOCK	CLEAR	Output state
↑	L	No change
↓	L	Advance to next state
X	H	All outputs are low

Device type 13

CLOCK	CLELAR	Output state
↑	L	No change
↓	L	Advance to next stage
X	H	All outputs are low

H = High level voltage (steady-state)
L = Low level voltage (steady-state)
X = Irrelevant
↑ = Low-to-high clock transition
↓ = High-to-low clock transition

FIGURE 3. Truth tables – Continued.

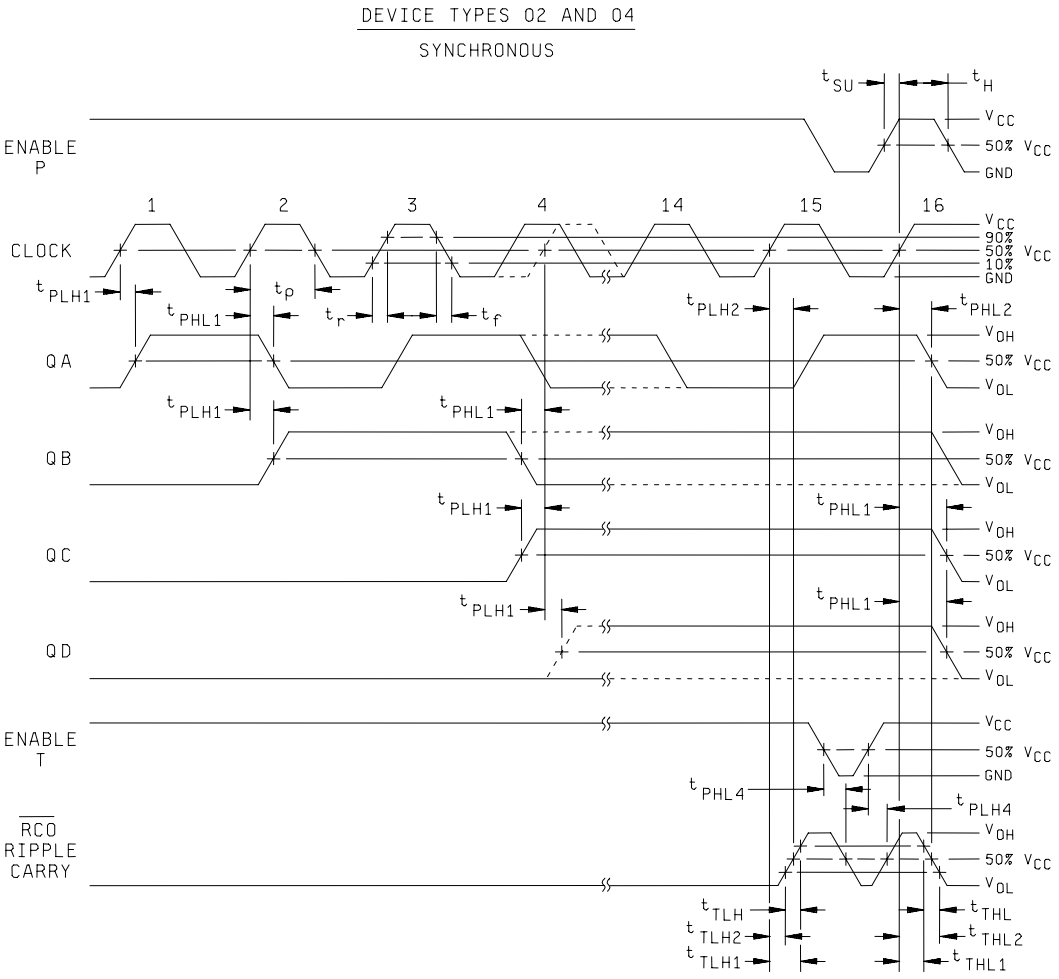

NOTES:

1. Clock input pulse characteristics: $t_r = t_f \leq 6$ ns, t_p (clock) ≤ 30 ns.
2. ENABLE input pulse characteristics: $t_r = t_f \leq 6$ ns, t_p (ENABLE T) = t_p (ENABLE P) ≤ 68 ns, $t_{SETUP} \leq 60$ ns, $t_{HOLD} \leq 8$ ns.
3. The clock input characteristics for f_{MAX} are as follows: $t_r = t_f \leq 6$ ns, t_p (clock) ≤ 30 ns, PRR ≥ 21 MHz.
4. $C_L = 50$ pF ± 10 percent (including probe and jig capacitance).
5. Voltage measurements are to be made with respect to network ground terminal.
6. $t_{TLH} = t_{TLH1} - t_{TLH2}$, $t_{THL} = t_{THL2} - t_{THL1}$.

FIGURE 4. Switching time test circuits and waveforms.

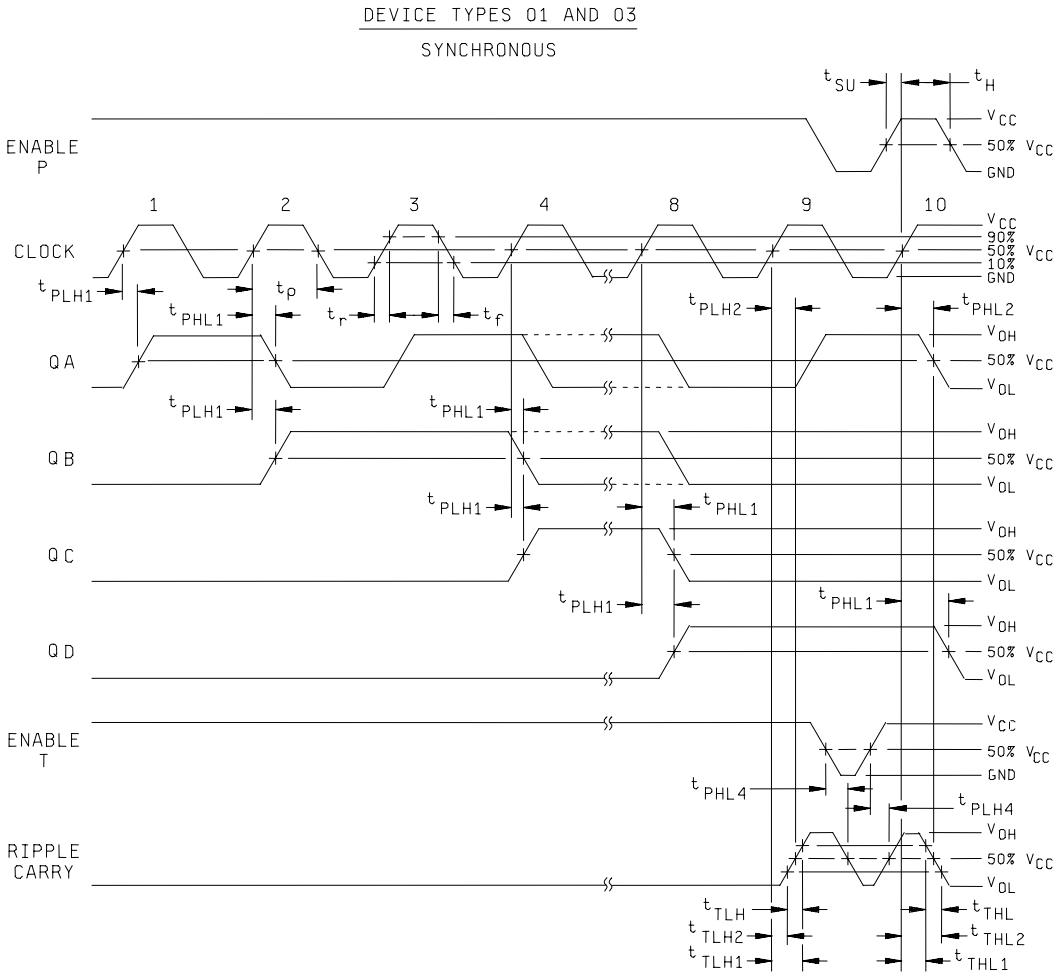

VOLTAGE WAVEFORMS

NOTES:

1. Clock input pulse characteristics: $t_r = t_f \leq 6$ ns, t_p (clock) ≤ 30 ns.
2. ENABLE input pulse characteristics: $t_r = t_f \leq 6$ ns, t_p (ENABLE T) = t_p (ENABLE P) ≤ 68 ns, $t_{SETUP} \leq 60$ ns, $t_{HOLD} \leq 8$ ns.
3. The clock input characteristics for f_{MAX} are as follows: $t_r = t_f \leq 6$ ns, t_p (clock) ≤ 30 ns, PRR ≥ 21 MHz.
4. $C_L = 50$ pF ± 10 percent (including probe and jig capacitance).
5. Voltage measurements are to be made with respect to network ground terminal.
6. $t_{TLH} = t_{TLH1} - t_{TLH2}$, $t_{THL} = t_{THL2} - t_{THL1}$.

FIGURE 4. Switching time test circuits and waveforms – Continued.

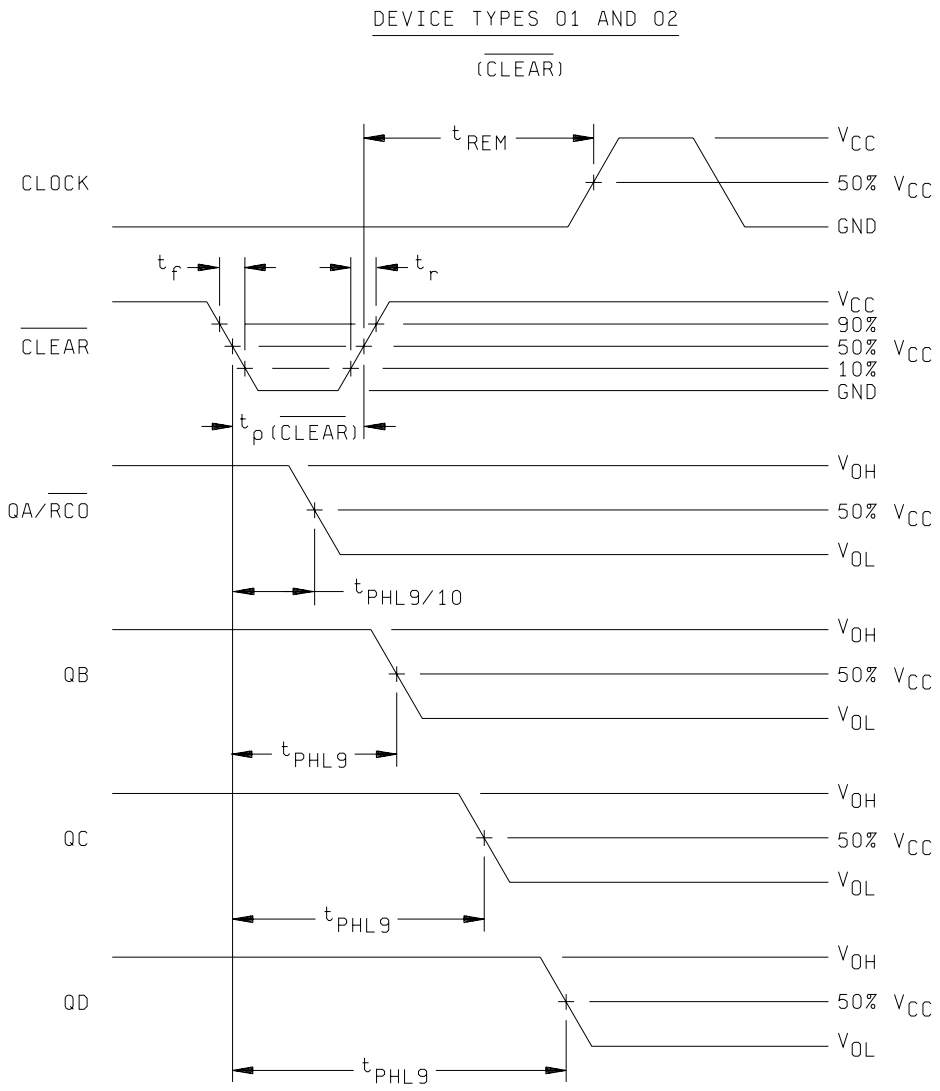

NOTES:

1. $\overline{\text{CLEAR}}$ device types 01 and 02 (asynchronous) pulses are active low and dominates regardless of the state of the clock.
2. $\overline{\text{CLEAR}}$ input pulse characteristics are as follows: $t_r = t_f \leq 6$ ns, clear tp ($\overline{\text{CLR}}$) ≤ 24 ns, tp (CLK) ≤ 30 ns, $t_{REM} \leq 38$ ns.
3. $C_L = 50$ pF ± 10 percent (including probe and jig capacitance).
4. Voltage measurements are to be made with respect to the network ground terminal.

FIGURE 4. Switching time test circuits and waveforms – Continued.

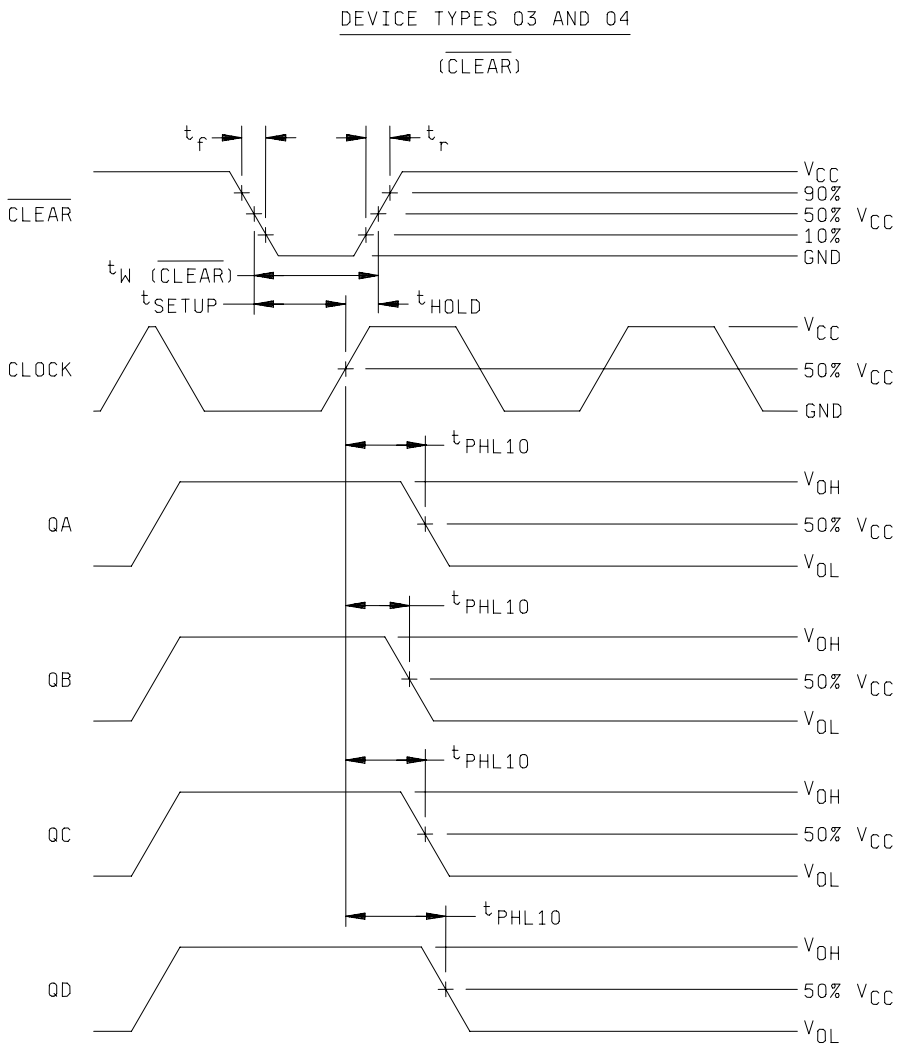

NOTES:

1. $\overline{\text{CLEAR}}$ device types 03 and 04 (synchronous) pulses are active low and dominates regardless of the state of the clock.
2. $\overline{\text{CLEAR}}$ input pulse characteristics are as follows: $t_r = t_f \leq 6$ ns, tp ($\overline{\text{CLR}}$) ≤ 56 ns, $t_r \leq 8$ ns, $t_{SU} \leq 48$ ns, PRR ≤ 1 MHz.
3. $C_L = 50$ pF ± 10 percent (including probe and jig capacitance).
4. tp (CLK) ≤ 30 ns, PRR ≤ 1 MHz.
5. Voltage measurements are to be made with respect to the network ground terminal.

FIGURE 4. Switching time test circuits and waveforms – Continued.

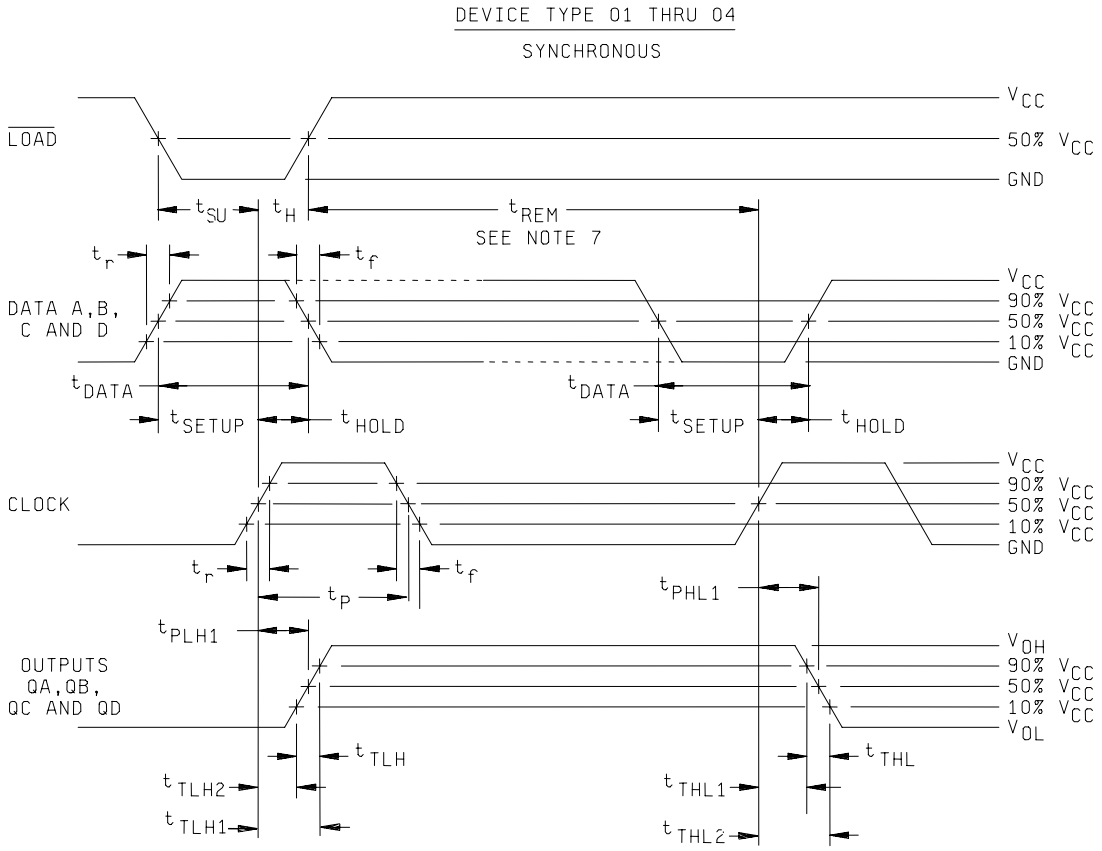

NOTES:

1. Clock input pulse characteristics: $t_r = t_f \leq 6$ ns, t_p (clock) ≤ 30 ns.
2. Data input pulse characteristics: $t_r = t_f \leq 6$ ns, t_p (data) = 60 ns, $t_{SETUP} \leq 45$ ns, $t_{HOLD} \leq 15$ ns.
3. The clock input characteristics for f_{MAX} are as follows: $t_r = t_f \leq 6$ ns, t_p (clock) ≤ 24 ns, PRR ≥ 21 MHz.
4. $C_L = 50$ pF ± 10 percent (including probe and jig capacitance).
5. Voltage measurements are to be made with respect to network ground terminal.
6. $t_{TLH} = t_{TLH1} - t_{TLH2}$, $t_{THL} = t_{THL2} - t_{THL1}$.
7. Device types 01 and 02 $t_{REM} \leq 38$ ns, load input characteristics:
   $t_r = t_f \leq 6$ ns, t_p (load) ≤ 53 ns,= $t_{SETUP} \leq 45$ ns, $t_{HOLD} \leq 8$ ns.

FIGURE 4. Switching time test circuits and waveforms – Continued.

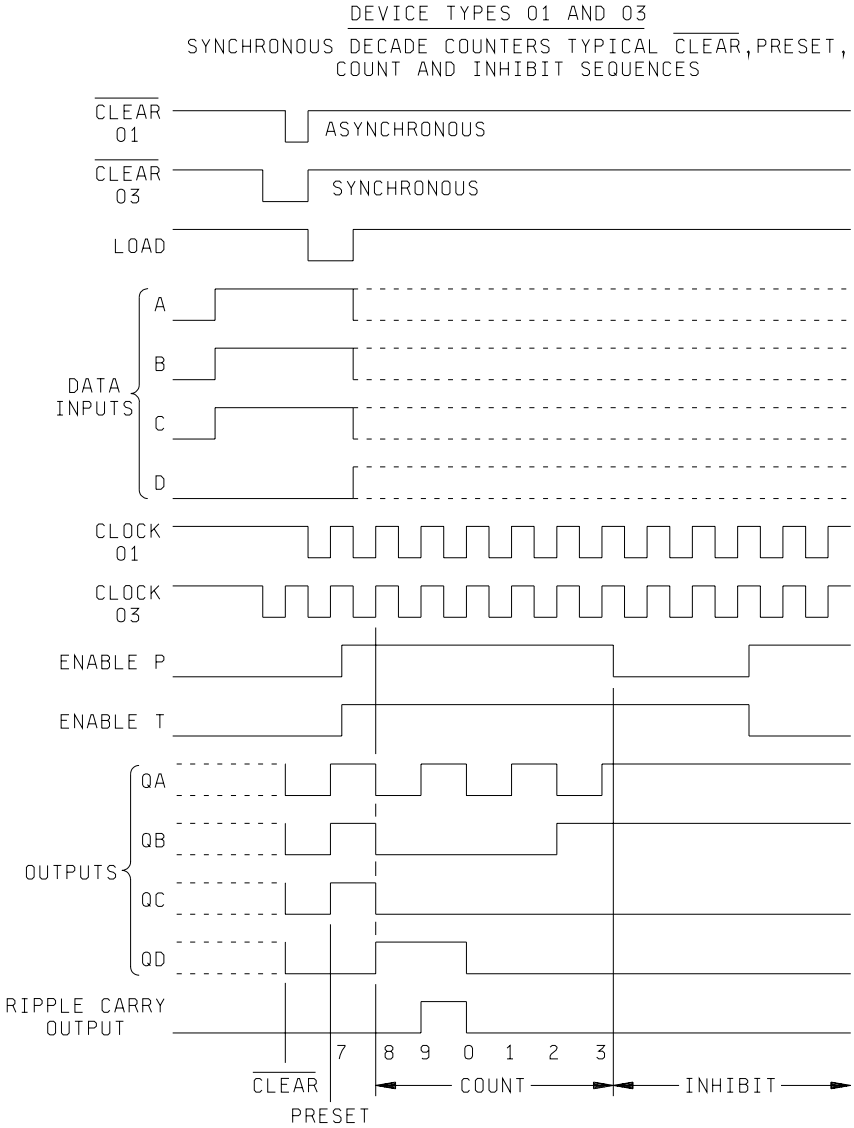

Sequence:
1. CLEAR outputs to zero.
2. Preset BCD seven.
3. Count to eight, nine, zero, one, two, and three.
4. Inhibit.

FIGURE 4. Switching time test circuits and waveforms – Continued.

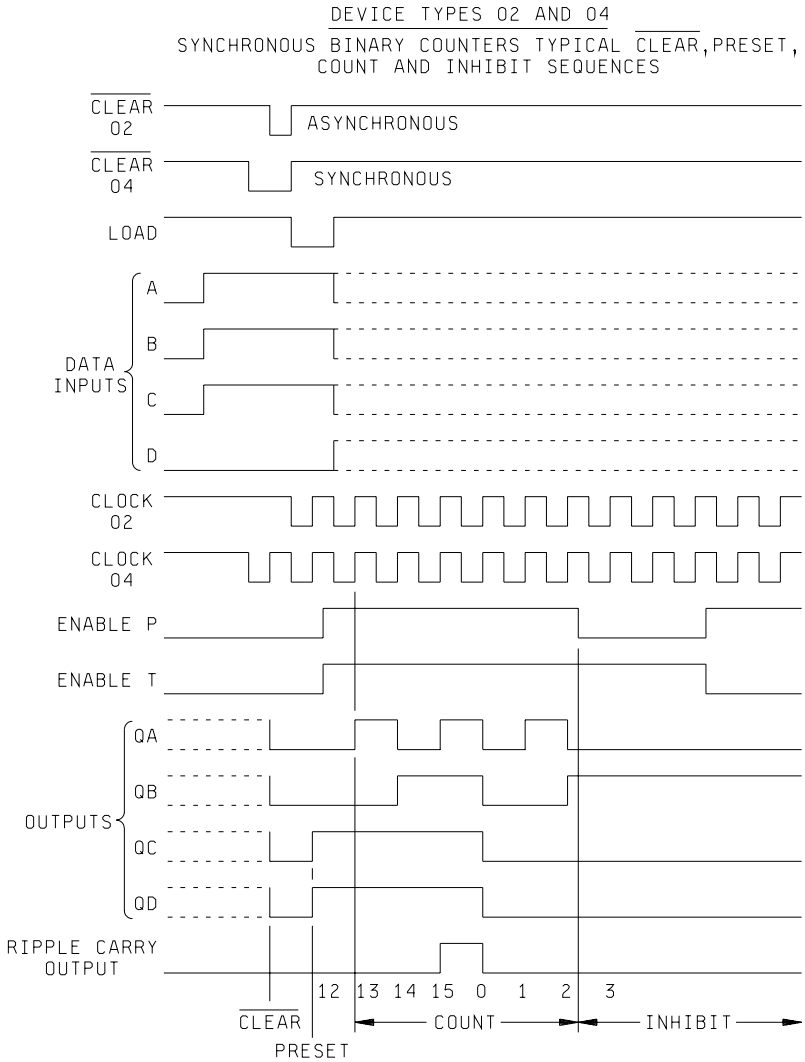

Sequence:
1. CLEAR outputs to zero.
2. Preset to binary.
3. Count to thirteen, fourteen, fifteen, zero, one, and two.
4. Inhibit.

FIGURE 4. Switching time test circuits and waveforms – Continued.

DEVICE TYPES 01,02,03 AND 04

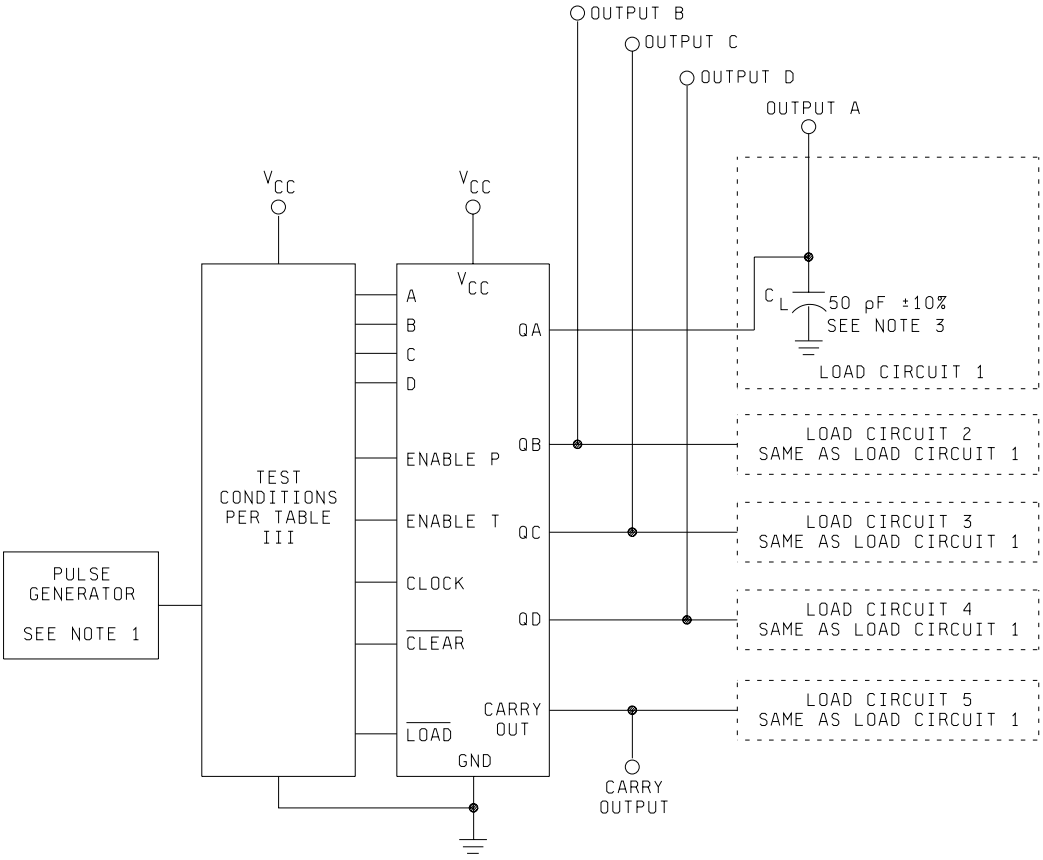

NOTES:

1. The pulse generator has the following characteristics: $V_{gen} = V_{CC}$, $t_r = t_f \leq 6$ ns, PRR $\leq$ 1 MHz.
2. Voltage values are with respect to ground terminal.
3. C_L includes probe and jig capacitance.
4. f_{MAX}: $t_r = t_f \leq 6$ ns.

FIGURE 4. Switching time test circuits and waveforms – Continued.

DEVICE TYPE 05

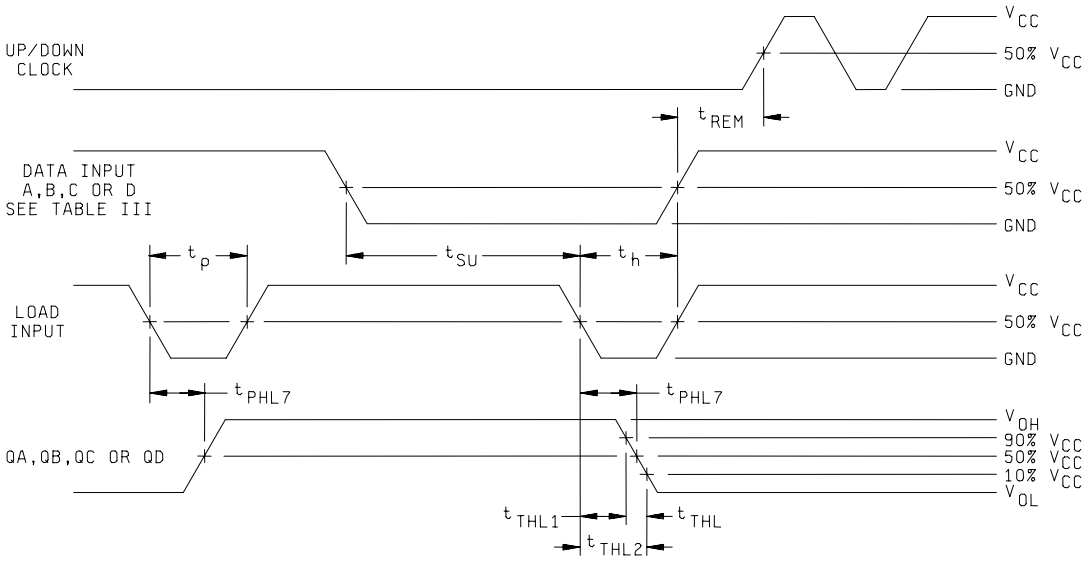

NOTES:

1. Clock input pulse characteristics: $t_r = t_f \leq 6$ ns, t_p (clock) ≤ 38 ns.
2. Data input pulse characteristics: $t_r = t_f \leq 6$ ns, t_p (data) ≤ 53 ns, $t_{SETUP} \leq 45$ ns, $t_{HOLD} \leq 8$ ns.
3. The clock input characteristics for f_{MAX} are as follows: $t_r = t_f \leq 6$ ns, t_p (clock) ≤ 29 ns, PRR ≥ 17 MHz.
4. $C_L = 50$ pF ± 10 percent (including probe and jig capacitance).
5. $t_{TLH} = t_{TLH1} - t_{TLH2}$, $t_{THL} = t_{THL2} - t_{THL1}$.
6. Voltage measurements are to be made with respect to network ground terminal.

FIGURE 4. Switching time test circuits and waveforms – Continued.

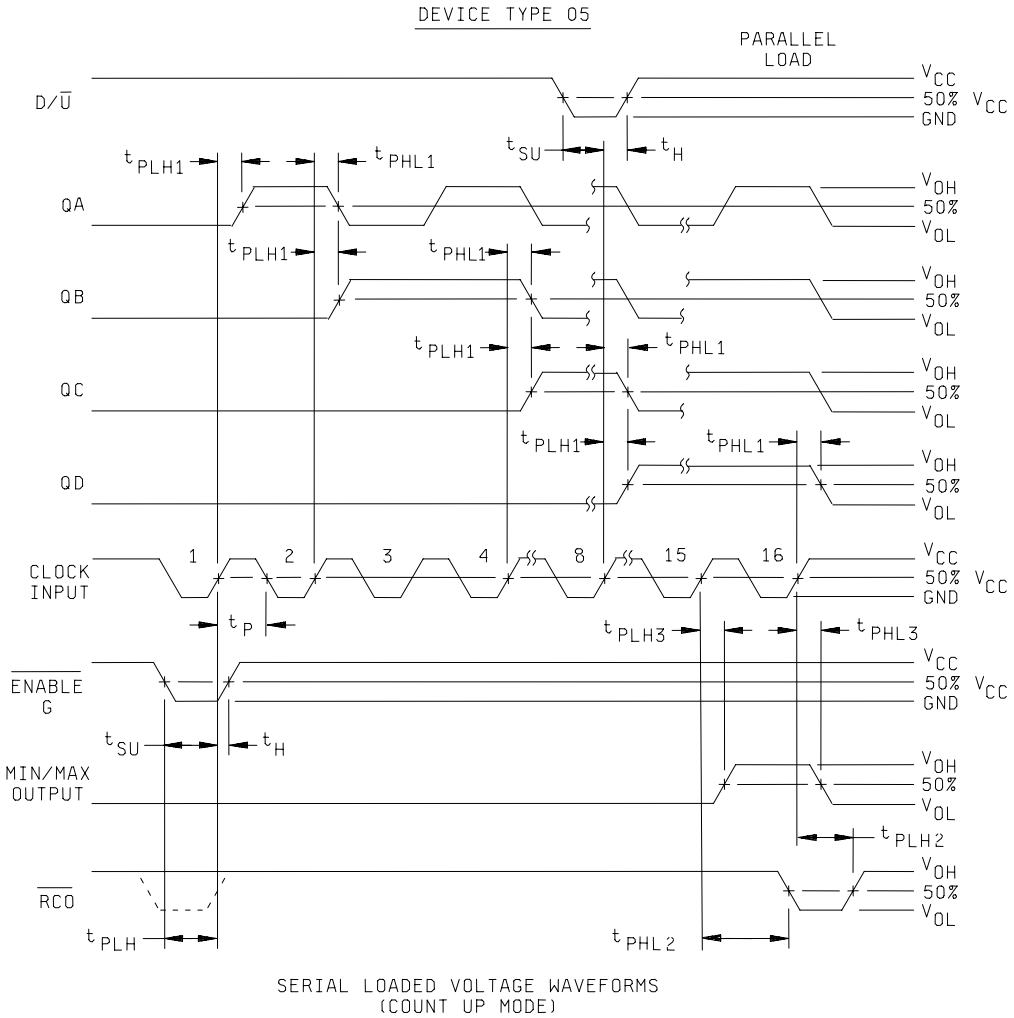

FIGURE 4. Switching time test circuits and waveforms – Continued.

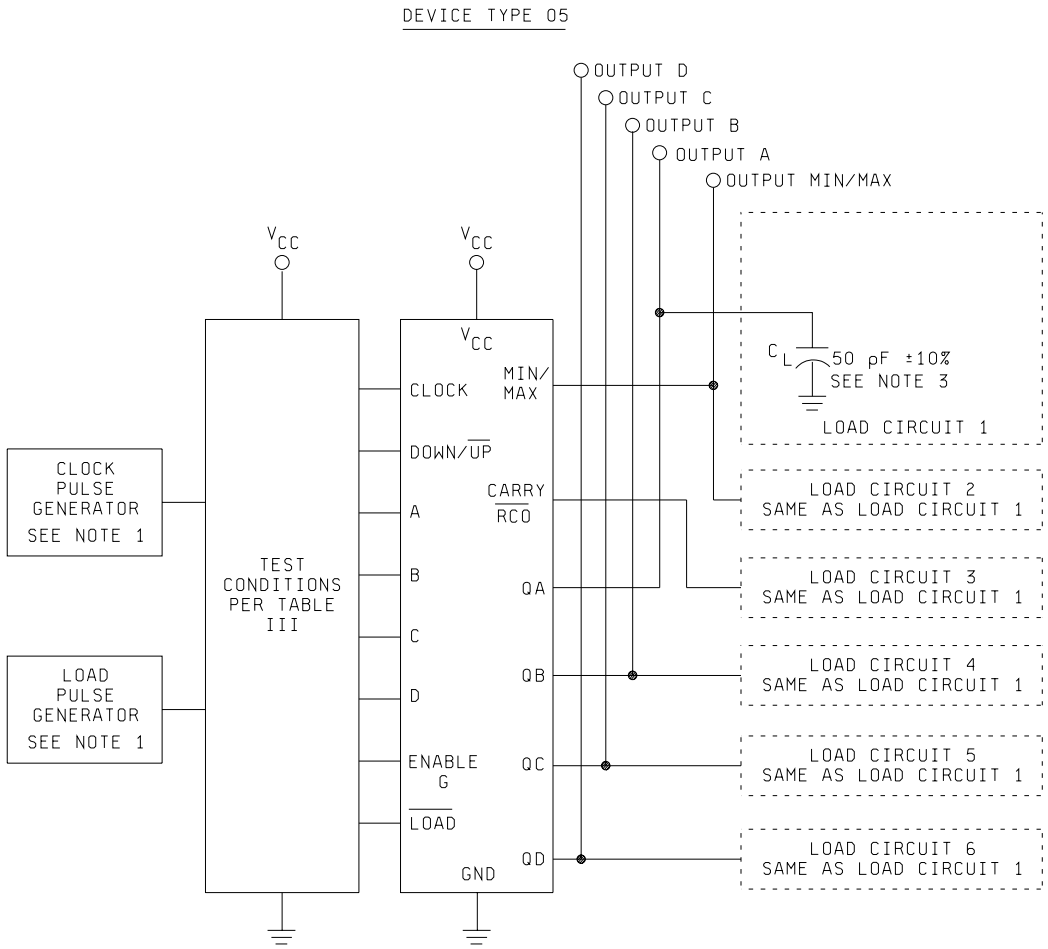

NOTES:

1. Clock input pulse characteristics: $t_r = t_f \leq 6$ ns, t_p (clock) ≤ 38 ns, PRR ≤ 1 MHz.
2. Load input pulse characteristics: $t_r = t_f \leq 6$ ns, t_p (load) = 36 ns, $t_{REM} \leq 45$ ns.
3. C_L Includes probe and jig capacitance.
4. The clock input characteristics for f_{MAX} are as follows: $t_r = t_f \leq 6$ ns; for 25°C, t_p (clock) ≥ 21 ns, PRR ≥ 23 MHz; for 125°C, t_p (clock) ≥ 29 ns, PRR ≥ 17 MHz.
5. ENABLE G input pulse characteristics: $t_{SETUP} = 62$ ns, (ENABLE G before clock), t_r (ENABLE G after clock) = 8 ns, $t_{SETUP} = 62$ ns, (down/up before clock), $t_r = 8$ ns, (down/up after clock).

FIGURE 4. Switching time test circuits and waveforms – Continued.

DEVICE TYPES 06 AND 07

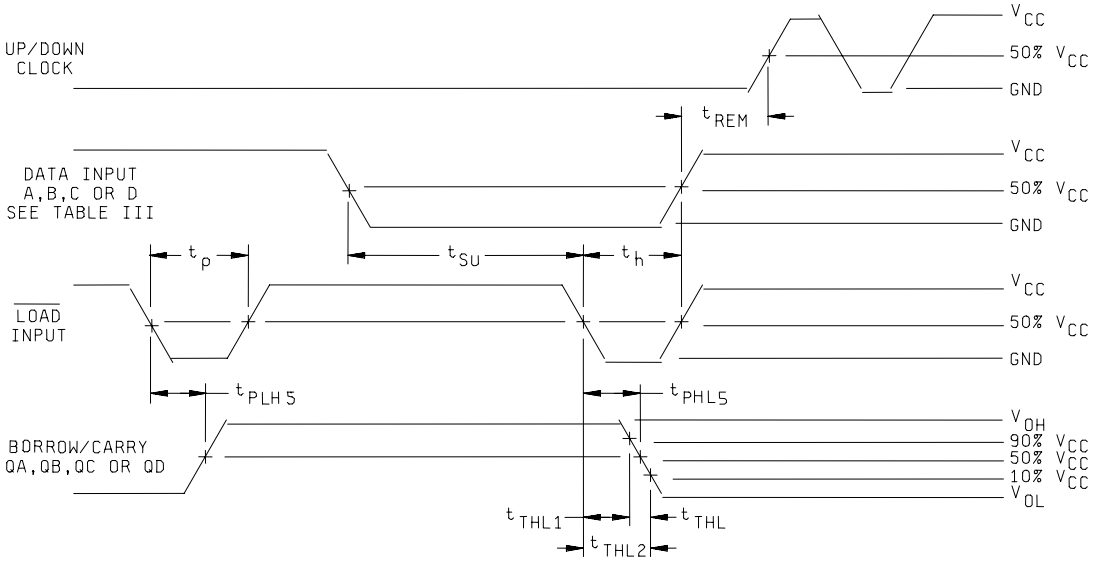

NOTES:

1. Clock input pulse characteristics: $t_r = t_f \leq 6$ ns, t_p (clock) ≤ 45 ns.
2. Data input pulse characteristics: $t_r = t_f \leq 6$ ns, t_p (data) ≤ 41 ns, $t_{SETUP} \leq 33$ ns, $t_{HOLD} \leq 8$ ns.
3. The clock input characteristics for f_{MAX} are as follows: $t_r = t_f \leq 6$ ns, t_p (clock) ≤ 36 ns, PRR ≥ 14 MHz.
4. $C_L = 50$ pF ± 10 percent (including probe and jig capacitance).
5. Voltage measurements are to be made with respect to network ground terminal.
6. $t_{TLH} = t_{TLH1} - t_{TLH2}$; $t_{THL} = t_{THL2} - t_{THL1}$.

FIGURE 4. Switching time test circuits and waveforms – Continued.

DEVICE TYPES 06 AND 07

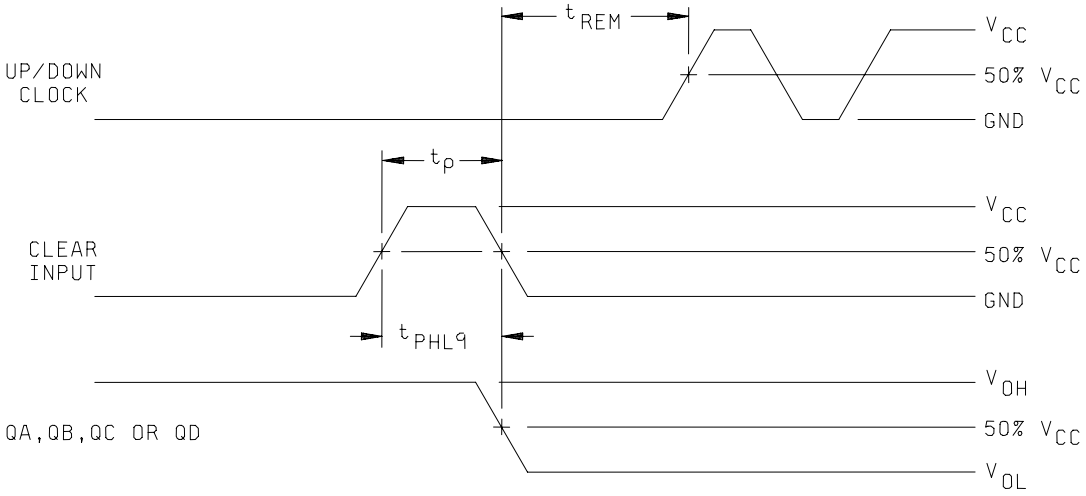

CLEAR SWITCHING VOLTAGE WAVEFORM

FIGURE 4. Switching time test circuits and waveforms – Continued.

DEVICE TYPES 06 AND 07

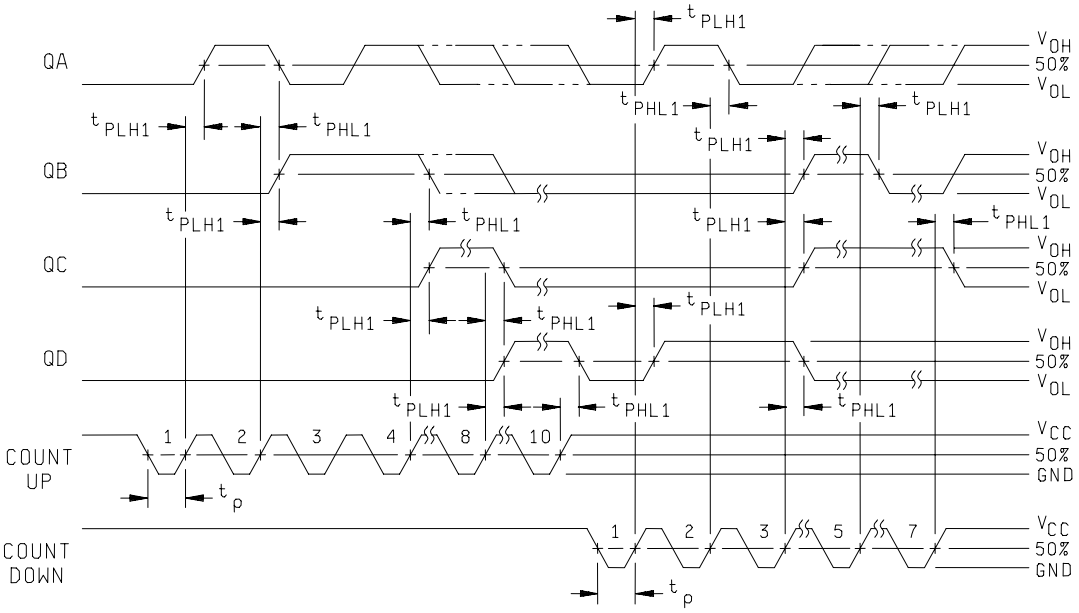

SERIAL LOADED VOLTAGE WAVEFORMS

FIGURE 4. Switching time test circuits and waveforms – Continued.

DEVICE TYPE 06 AND 07

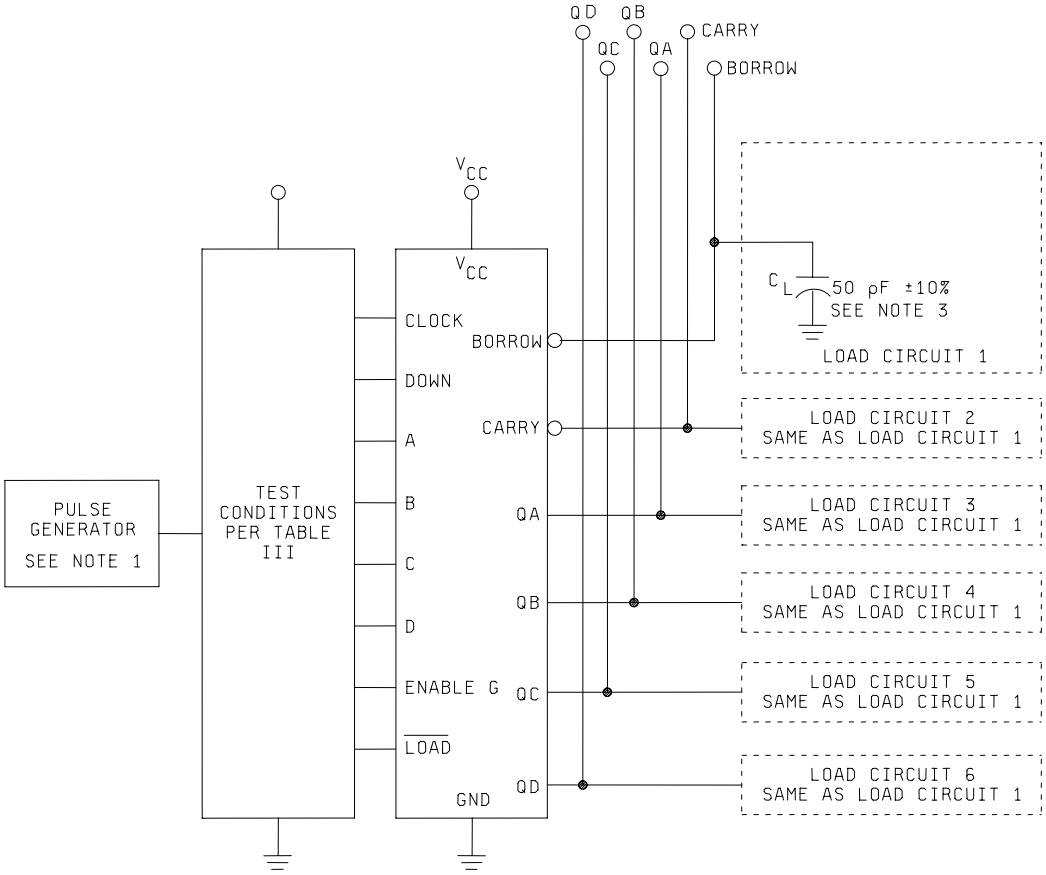

NOTES:

1. Clock (up or down) input pulse characteristics: $t_r = t_f \leq 6$ ns, t_p (clock) ≤ 45 ns, PRR ≤ 1 MHz.
2. Load input pulse characteristics: $t_r = t_f \leq 6$ ns, t_p (load) $t_{REM} = 45$ ns, device 06, $t_p = 78$ ns, device 07, $t_p = 36$ ns.
3. C_L includes probe and jig capacitance.
4. The clock input characteristics for f_{MAX} are as follows: $t_r = t_f \leq 6$ ns, for 25°C, t_p (clock) = 28 ns, PRR ≤ 18 MHz, for +125°C, t_p (clock) = 36 ns, PRR = 14 MHz.
5. Clear input pulse characteristics: t_p (clear) device type 06 = 78 ns, $t_{REM} = 33$ ns, device type 07, $t_p = 39$ ns.

FIGURE 4. Switching time test circuits and waveforms – Continued.

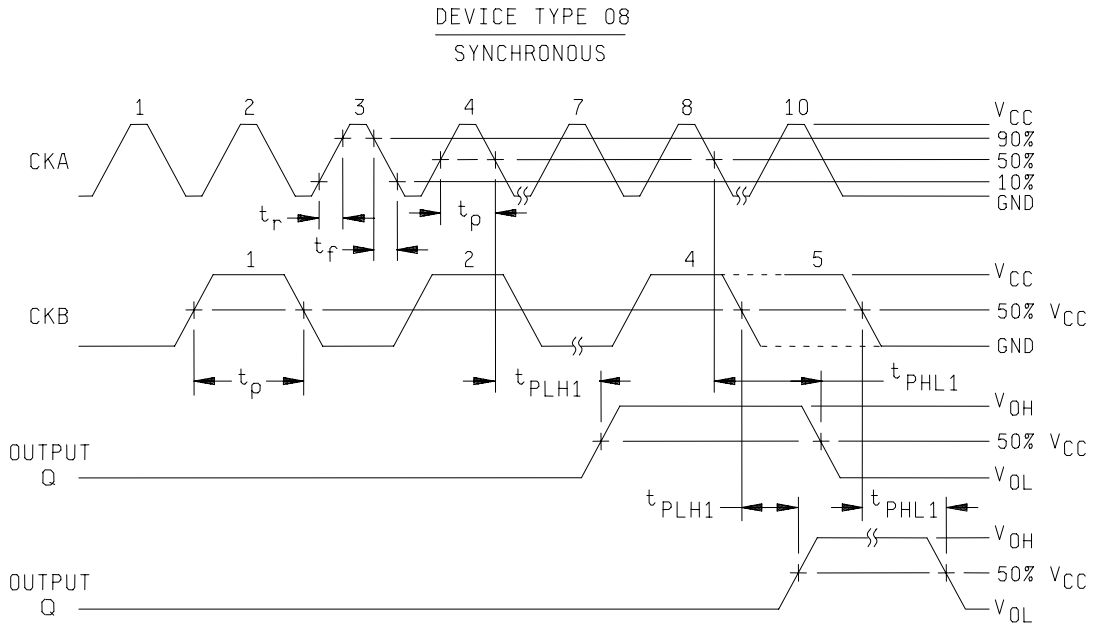

FIGURE 4. Switching time test circuits and waveforms – Continued.

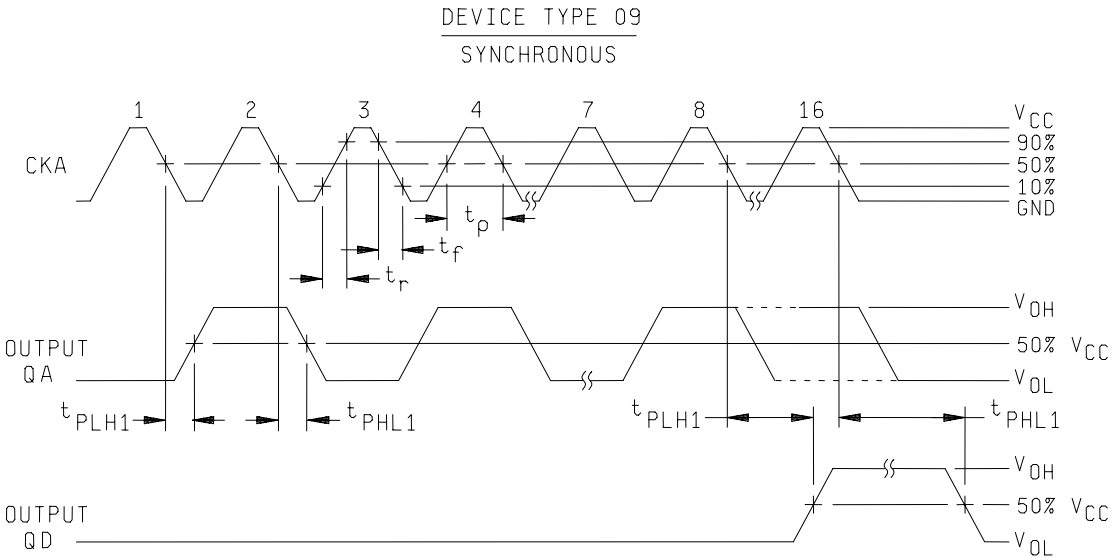

COUNT VOLTAGE WAVEFORMS

FIGURE 4. Switching time test circuits and waveforms – Continued.

DEVICE TYPES 08 AND 09

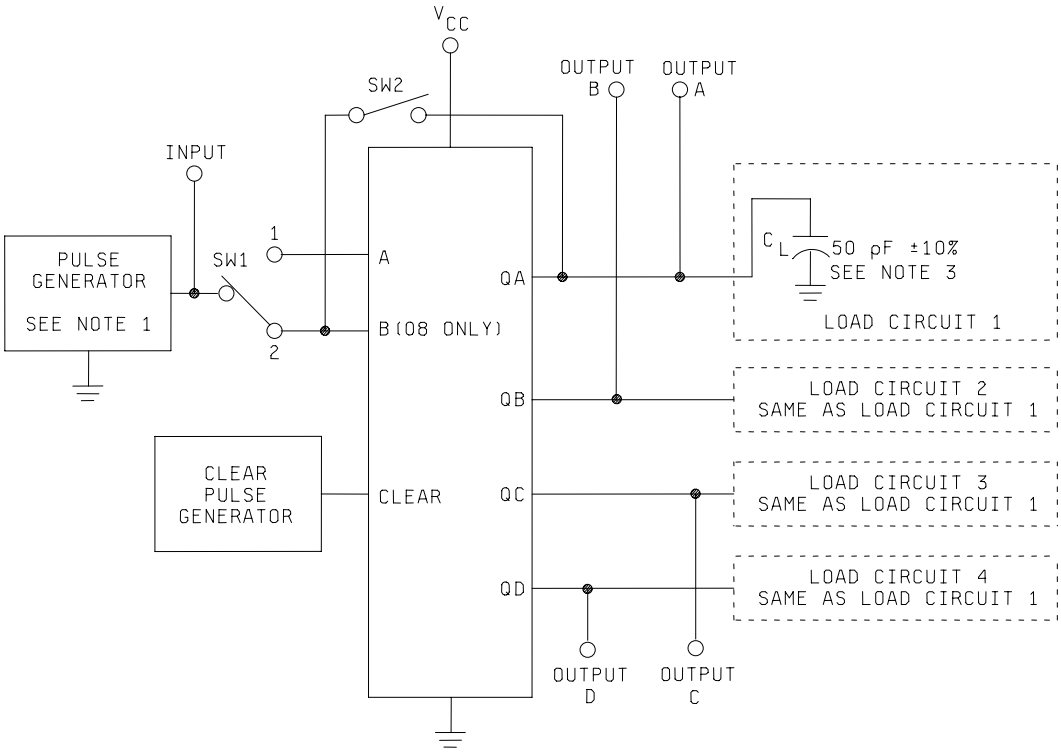

NOTES:

1. Clock input pulse characteristics: $t_r = t_f \leq 6$ ns, PRR $\leq$ 1 MHz. Device type 08, t_p (clock) $\leq$ 28 ns; device type 09, t_p (clock) $\leq$ 24 ns.
2. For f_{MAX}, clock input pulse characteristics are as follows: $t_r = t_f \leq 6$ ns; device type 08 , t_p (clock) $\leq$ 22 ns, PRR $\geq$ 23 MHz; device type 09, t_p (clock) $\leq$ 24 ns, PRR $\geq$ 21 MHz.
3. C_L includes probe and jig capacitance.
4. Clear input pulse characteristics: t_p (clear) $\leq$ 38 ns; device type 08, t_{REM} = 33 ns; device type 09, $t_{REM} \leq$ 15 ns.

FIGURE 4. Switching time test circuits and waveforms – Continued.

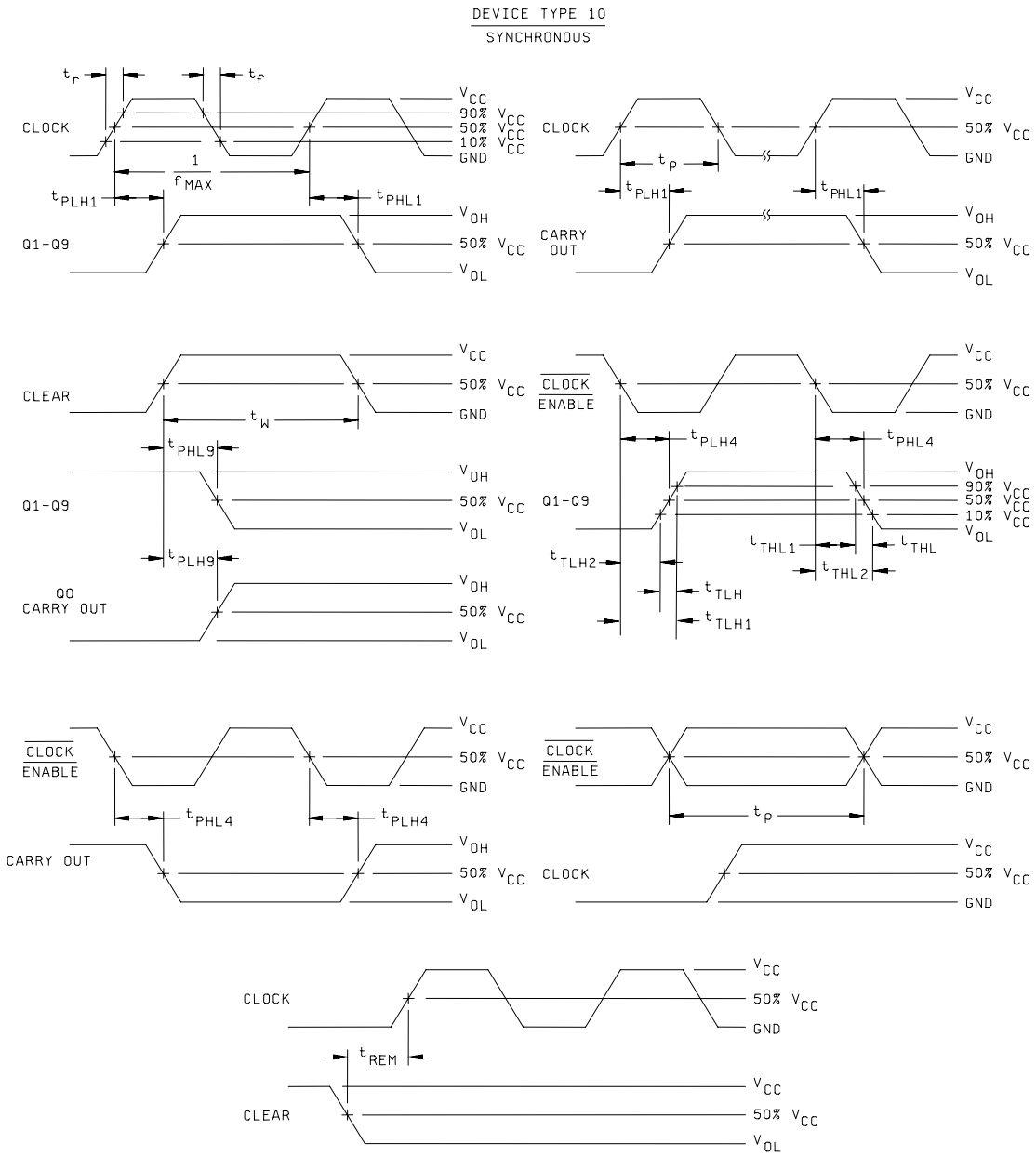

FIGURE 4. Switching time test circuits and waveforms – Continued.

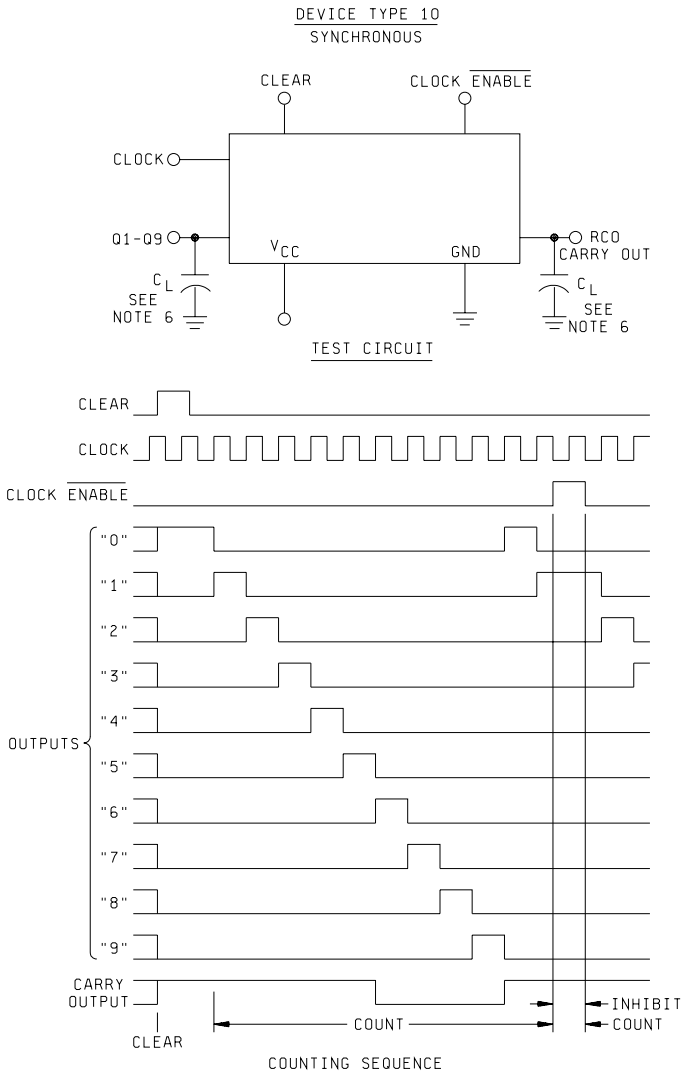

NOTES:

1. CLOCK ENABLE pulse is active low and dominates regardless of the state of the clock.
2. Clear input pulse characteristics are as follows: $t_r = t_f \leq 6$ ns, t_p (clear) ≤ 24 ns, PRR ≤ 1 MHz, $t_{REM} \leq 30$ ns.
3. Clock input pulse characteristics: $t_r = t_f \leq 6$ ns, t_p (clock) ≤ 30 ns, PRR ≤ 1 MHz.
4. CLOCK ENABLE pulse characteristics are as follows: $t_r = t_f \leq 6$ ns, t_p ($\overline{\text{enable}}$) ≤ 30 ns, PRR ≤ 1 MHz.
5. The clock input characteristics for f_{MAX} are as follows: $t_r = t_f \leq 6$ ns, t_p (clock) ≤ 29 ns, PRR ≤ 17 MHz.
6. $C_L = 50$ pF ±10% (includes probe and jig capacitance).
7. Voltage measurements are to be made with respect to network ground terminal.
8. $t_{TLH} = t_{TLH1} - t_{TLH2}$, $t_{THL} = t_{THL2} - t_{THL1}$.

FIGURE 4. Switching time test circuits and waveforms – Continued.

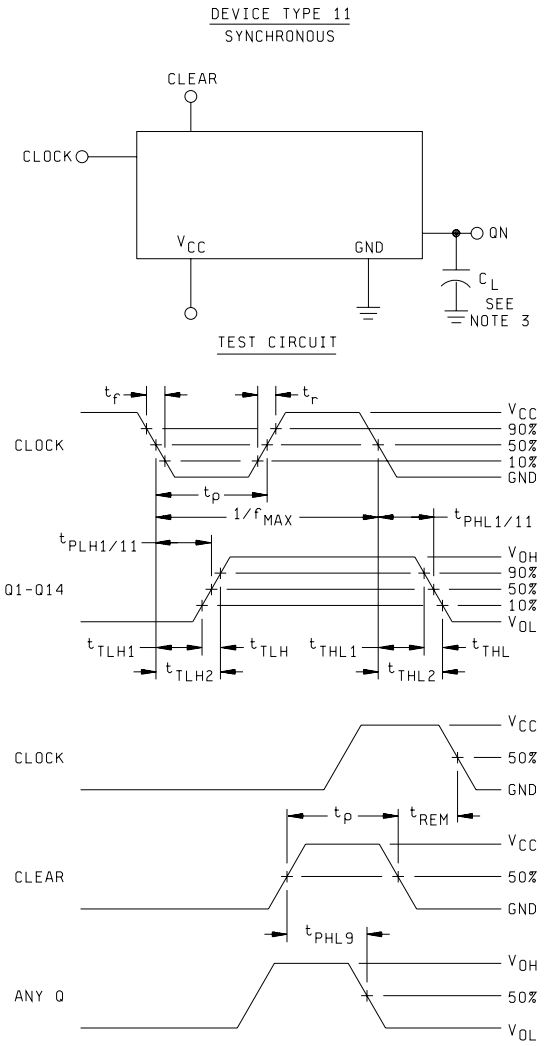

NOTES:

1. Clock input pulse characteristics: $t_r = t_f \leq 6$ ns, t_p (clock) ≤ 27 ns.
2. Clear input pulse characteristics: $t_r = t_f \leq 6$ ns, t_p (clear) ≤ 24 ns, $t_{REM} \leq 30$ ns.
3. $C_L = 50$ pF ±10% (includes probe and jig capacitance).
4. The clock input characteristics for f_{MAX} are as follows: $t_r = t_f \leq 6$ ns, t_p (clock) ≤ 24 ns, PRR ≥ 21 MHz.
5. Voltage measurements are to be made with respect to network ground terminal.
6. $t_{TLH} = t_{TLH2} - t_{TLH1}$, $t_{THL} = t_{THL2} - t_{THL1}$.

FIGURE 4. Switching time test circuits and waveforms – Continued.

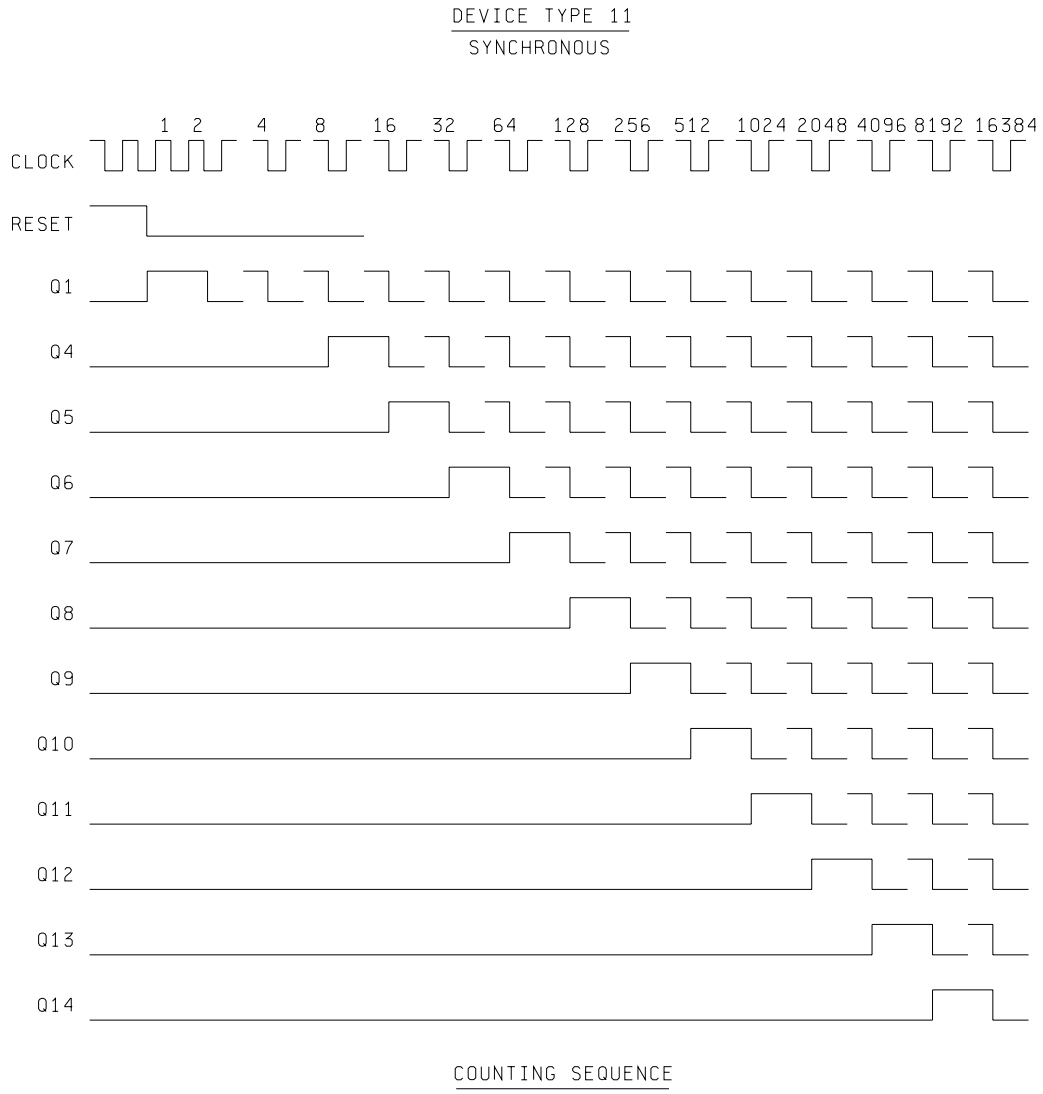

FIGURE 4. Switching time test circuits and waveforms – Continued.

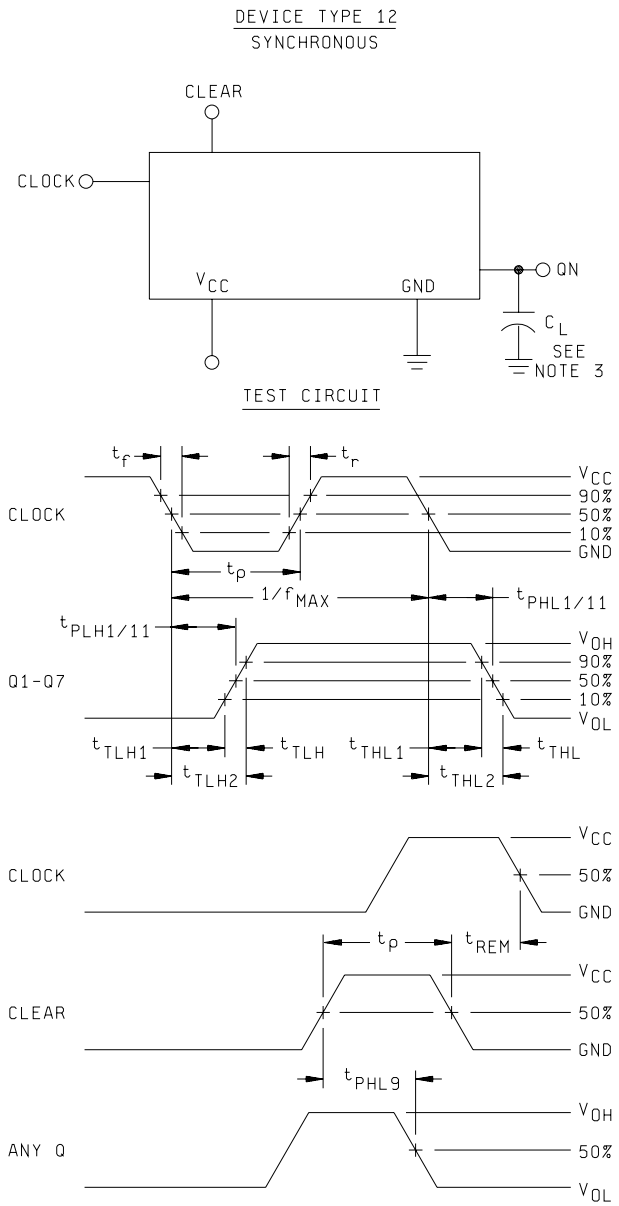

NOTES:

1. Clock input pulse characteristics: $t_r = t_f \leq 6$ ns, t_p (clock) ≤ 27 ns.
2. Clear input pulse characteristics: $t_r = t_f \leq 6$ ns, t_p (clear) ≤ 24 ns, $t_{REM} \leq 30$ ns.
3. $C_L = 50$ pF ±10% (includes probe and jig capacitance).
4. The clock input characteristics for f_{MAX} are as follows: $t_r = t_f \leq 6$ ns, t_p (clock) ≤ 24 ns, PRR ≥ 21 MHz.
5. $t_{TLH} = t_{TLH2} - t_{TLH1}$, $t_{THL} = t_{THL2} - t_{THL1}$.
6. Voltage measurements are to be made with respect to network ground terminal.

FIGURE 4. Switching time test circuits and waveforms – Continued.

DEVICE TYPE 12

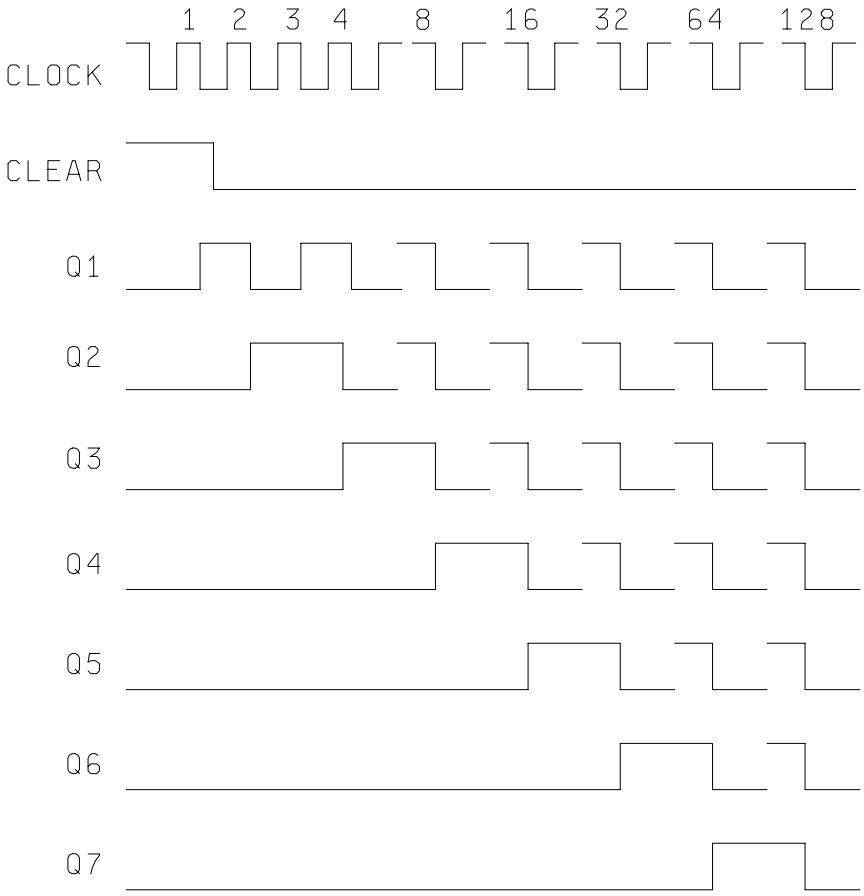

COUNTING SEQUENCE

FIGURE 4. Switching time test circuits and waveforms – Continued.

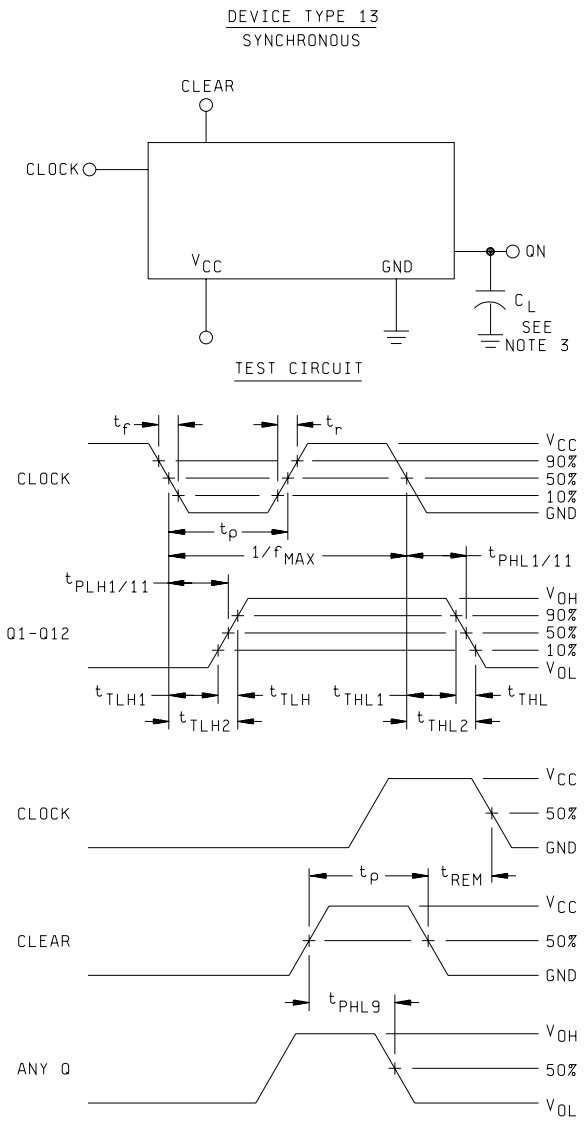

NOTES:

1. Clock input pulse characteristics: $t_r = t_f \leq 6$ ns, t_p (clock) ≤ 27 ns.
2. Clear input pulse characteristics: $t_r = t_f \leq 6$ ns, t_p (clear) ≤ 24 ns, $t_{REM} \leq 30$ ns.
3. $C_L = 50$ pF ±10% (includes probe and jig capacitance).
4. The clock input characteristics for f_{MAX} are as follows: $t_r = t_f \leq 6$ ns, t_p (clock) ≤ 24 ns, PRR ≥ 21 MHz.
5. $t_{TLH} = t_{TLH2} - t_{TLH1}$, $t_{THL} = t_{THL2} - t_{THL1}$.
6. Voltage measurements are to be made with respect to network ground terminal.

FIGURE 4. Switching time test circuits and waveforms – Continued.

DEVICE TYPE 13
SYNCHRONOUS

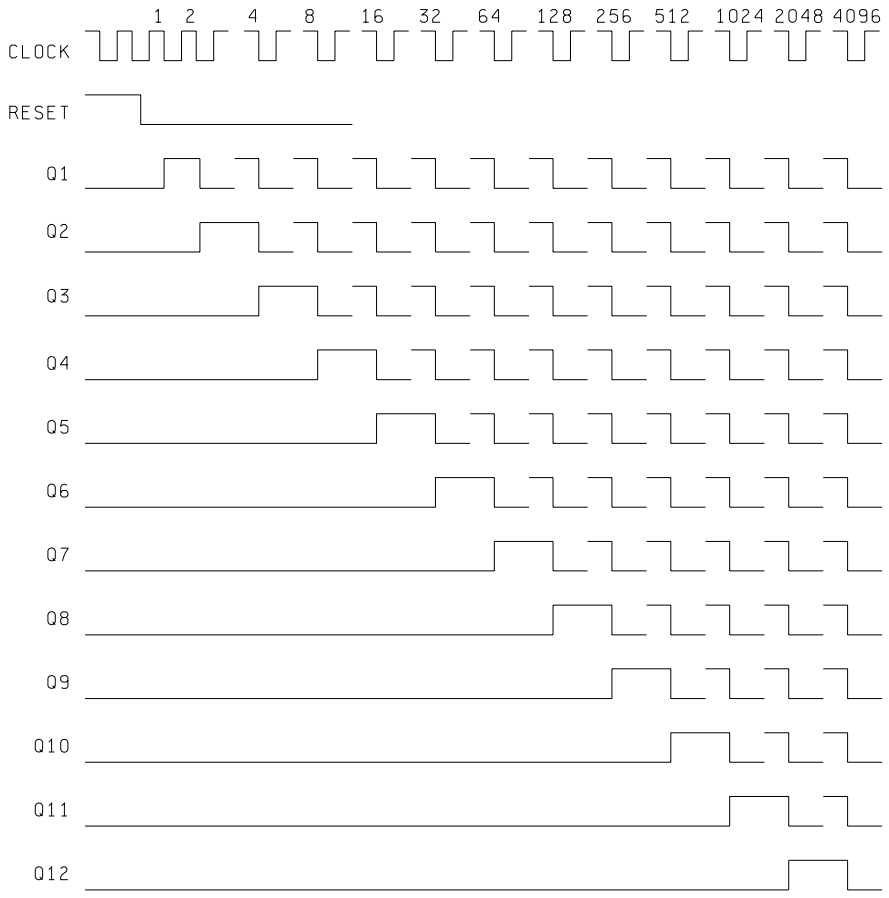

COUNTING SEQUENCE

FIGURE 4. Switching time test circuits and waveforms – Continued.

TABLE III. Group A inspection for device type 01.

Symbol	MIL-STD-883 method	Case E,F,X	Terminal conditions 1/ 1	2	3	4	5	6	7	8	9	10	11	12	13	14	15	16	Measured terminal	Test limits Subgroup 1 T_C = +25°C Min	Max	Subgroup 2 T_C = +125°C Min	Max	Subgroup 3 T_C = -55°C Min	Max	Unit
		2	2	3	4	5	7	8	9	10	12	13	14	15	17	18	19	20								
		Test no.	$\overline{CLR}$	CLK	A	B	C	D	ENABLE P	GND	$\overline{LOAD}$	ENABLE T	QD	QC	QB	QA	RCO	V_{CC}								
$V_{IC(pos)}$ 1/		1	1mA							1/								GND	$\overline{CLR}$		1.5					V
		2		1mA						"								"	CLK		"					"
		3			1mA					"								"	A		"					"
		4				1mA				"								"	B		"					"
		5					1mA			"								"	C		"					"
		6						1mA		"								"	D		"					"
		7							1mA	"								"	ENABLE P		"					"
		8								"	1mA							"	LOAD		"					"
		9								"		1mA						"	ENABLE T		"					"
$V_{IC(neg)}$		10	-1mA							GND								1/	$\overline{CLR}$		-1.5					"
		11		-1mA						"								"	CLK		"					"
		12			-1mA					"								"	A		"					"
		13				-1mA				"								"	B		"					"
		14					-1mA			"								"	C		"					"
		15						-1mA		"								"	D		"					"
		16							-1mA	"								"	ENABLE P		"					"
		17								"	-1mA							"	LOAD		"					"
		18								"		-1mA						"	ENABLE T		"					"
I_{CCH}	3005	19	6.0V	GND	6.0V	6.0V	6.0V	6.0V	6.0V	"	GND	6.0V						6.0V	V_{CC}		0.2		20			µA
I_{CCL}	3005	20	GND	6.0V	6.0V	6.0V	6.0V	6.0V	GND	"	6.0V	GND						"	V_{CC}		0.2		20			µA
V_{OH3}	3006 2/	21	4.2V	IN	4.2V					"	GND					-20µA		"	QA	5.95		5.95		5.95		V
		22	"	"		4.2V				"	"				-20µA			"	QB	"		"		"		"
		23	"	"			4.2V			"	"			-20µA				"	QC	"		"		"		"
		24	"	"				4.2V		"	"		-20µA					"	QO	"		"		"		"
		25	"	"	4.2V	3/	3/	4.2V		"	"	4.2V					-20µA	"	RCO	"		"		"		"
V_{OH5}	3006 2/	26	"	"	4.2V					"	"					-5.2mA		"	QA	5.48		5.2		5.48		"
		27	"	"		4.2V				"	"				-5.2mA			"	QB	"		"		"		"
		28	"	"			4.2V			"	"			-5.2mA				"	QC	"		"		"		"
		29	"	"				4.2V		"	"		-5.2mA					"	QD	"		"		"		"
		30	"	"	4.2V	3/	3/	4.2V		"	"	4.2V					-5.2mA	"	RCO	"		"		"		"
V_{OL3}	3007 4/	31	"	"	1.2V					"						20µA		"	QA		0.05		0.05		0.05	"
		32	"	"		1.2V				"					20µA			"	QB		"		"		"	"
		33	"	"			1.2V			"				20µA				"	QC		"		"		"	"
		34	"	"				1.2V		"			20µA					"	QD		"		"		"	"
		35	"	"						"		1.2V					20µA	"	RCO		"		"		"	"
V_{OL5}	3007 4/	36	"	"	1.2V					GND						5.2mA		"	QA		0.26		0.4		0.26	"
		37	"	"		1.2V				"					5.2mA			"	QB		"		"		"	"
		38	"	"			1.2V			"				5.2mA				"	QC		"		"		"	"
		39	"	"				1.2V		"			5.2mA					"	QD		"		"		"	"
		40	"	"						"		1.2V					5.2mA	"	RCO		"		"		"	"
I_{OS4}	3011 5/	41	4.0V	"	4.0V				4.0V	"	GND	4.0V				GND		4.0V	QA	-10	-120	-10	-120	-10	-120	mA
		42	"	"		4.0V			"	"	"	"			GND			"	QB	"	"	"	"	"	"	"
		43	"	"			4.0V		"	"	"	"		GND				"	QC	"	"	"	"	"	"	"
		44	"	"				4.0V	"	"	"	"	GND					"	QD	"	"	"	"	"	"	"
		45	"	"	4.0V	6/	6/	4.0V	"	"	"	"					GND	"	RCO	"	"	"	"	"	"	"
I_{IH}	3010	46	6.0V	GND	GND	GND	GND	GND	GND	"	GND	GND						6.0V	$\overline{CLR}$		0.05		0.1			µA
		47	GND	6.0V	GND	"	"	"	"	"	"	"						"	CLK		"		"			"
		48	"	GND	6.0V	"	"	"	"	"	"	"						"	A		"		"			"
		49	"	"	GND	6.0V	"	"	"	"	"	"						"	B		"		"			"
		50	"	"	"	GND	6.0V	"	"	"	"	"						"	C		"		"			"
		51	"	"	"	"	GND	6.0V	"	"	"	"						"	D		"		"			"
		52	"	"	"	"	"	GND	6.0V	"	"	"						"	ENABLE P		"		"			"
		53	"	"	"	"	"	"	GND	"	6.0V	"						"	LOAD		"		"			"
		54	"	"	"	"	"	"	GND	"	GND	6.0V						"	ENABLE T		"		"			"

See footnotes at end of table III.

TABLE III. Group A inspection for device type 01 – Continued.

Symbol	MIL-STD-883 method	Case E,F,X	Terminal conditions 1/																Measured terminal	Test limits						Unit
			1	2	3	4	5	6	7	8	9	10	11	12	13	14	15	16		Subgroup 1 T_C = +25°C		Subgroup 2 T_C = +125°C		Subgroup 3 T_C = -55°C		
		2	2	3	4	5	7	8	9	10	12	13	14	15	17	18	19	20								
		Test no.	$\overline{CLR}$	CLK	A	B	C	D	ENABLE P	GND	$\overline{LOAD}$	ENABLE T	QD	QC	QB	QA	RCO	V_{CC}		Min	Max	Min	Max	Min	Max	
I_{IL}	3009	55	GND	6.0V	6.0V	6.0V	6.0V	6.0V	6.0V	GND	6.0V	6.0V						6.0V	$\overline{CLR}$		-0.05		-0.1			µA
		56	6.0V	GND	6.0V	"	"	"	"	"	"	"						"	CLK		"		"			"
		57	"	6.0V	GND	"	"	"	"	"	"	"						"	A		"		"			"
		58	"	"	6.0V	GND	"	"	"	"	"	"						"	B		"		"			"
		59	"	"	"	6.0V	GND	"	"	"	"	"						"	C		"		"			"
		60	"	"	"	"	6.0V	GND	"	"	"	"						"	D		"		"			"
		61	"	"	"	"	"	6.0V	GND	"	"	"						"	ENABLE P		"		"			"
		62	"	"	"	"	"	"	6.0V	"	GND	"						"	LOAD		"		"			"
		63	"	"	"	"	"	"	6.0V	"	6.0V	GND	7/	7/	7/	7/		"	ENABLE T		"		"			"
																				Subgroup 4 T_C = +25°C						
																				Min	Max					
C_C	3012	64		8/						GND								GND	CLK		15					pF
		65	8/							"								"	$\overline{CLR}$		"					"
		66								"	8/							"	LOAD		"					"
		67								"		8/						"	ENABLE T		"					"
		68							8/	"								"	ENABLE P		"					"
C_{IN}	3012	69			8/					"								"	A		10					"
		70				8/				"								"	B		"					"
		71					8/			"								"	C		"					"
		72						8/		"								"	D		"					"
																			Measured terminal 9/	Subgroup 7 T_C = +25°C		Subgroup 8 T_C = +125°C		Subgroup 8 T_C = -55°C		
																				Min	Max	Min	Max	Min	Max	
Truth table tests 10/ 11/	3014	73	B	A	A	A	A	A	A	GND	A	A	L	L	L	L	L	4.5V	All outputs 12/ 13/							
		74	A	A	B	B	B	B	"	"	"	B	"	"	"	"	"	"								
		75	"	B	A	A	A	A	"	"	"	A	"	"	"	"	"	"								
		76	"	A	A	A	A	A	"	"	"	A	"	"	"	H	"	"								
		77	"	A	B	B	B	B	"	"	"	B	"	"	"	"	"	"								
		78	"	B	A	A	A	A	"	"	"	A	"	"	"	"	"	"								
		79	"	A	A	A	A	A	"	"	"	A	"	"	H	L	"	"								
		80	"	A	B	B	B	B	"	"	"	B	"	"	"	"	"	"								
		81	"	B	A	A	A	A	"	"	"	A	"	"	"	"	"	"								
		82	"	A	A	A	A	A	"	"	"	A	"	"	"	H	"	"								
		83	"	A	B	B	B	B	"	"	"	B	"	"	"	"	"	"								
		84	"	B	A	A	A	A	"	"	"	A	"	"	"	"	"	"								
		85	"	A	A	A	A	A	"	"	"	A	"	"	"	L	"	"								
		86	"	A	B	B	B	B	"	"	"	B	"	"	"	"	"	"								
		87	"	B	A	A	A	A	"	"	"	A	"	"	"	"	"	"								
		88	"	A	A	A	A	A	"	"	"	A	"	"	"	H	"	"								
		89	"	A	B	B	B	B	"	"	"	B	"	"	"	"	"	"								
		90	"	B	A	A	A	A	"	"	"	A	"	"	"	"	"	"								
		91	"	A	A	A	A	A	"	"	"	A	"	"	"	L	"	"								
		92	"	A	B	B	B	B	"	"	"	B	"	"	"	"	"	"								
		93	"	B	A	A	A	A	"	"	"	A	"	"	"	"	"	"								
		94	"	A	A	A	A	A	"	"	"	A	"	"	"	H	"	"								
		95	"	A	B	B	B	B	"	"	"	B	"	"	"	"	"	"								
		96	"	B	A	A	A	A	"	"	"	A	"	"	"	"	"	"								
		97	A	A	A	A	A	A	"	"	"	A	H	"	"	L	L	"								
		98	"	A	B	B	B	B	"	"	"	B	"	"	"	"	"	"								
		99	"	B	A	A	A	A	"	"	"	A	"	"	"	"	"	"								
		100	"	A	A	A	A	A	"	"	"	A	"	"	"	H	H	"								
		101	"	A	B	B	B	B	"	"	"	B	"	"	"	"	L	"								
		102	"	B	A	A	A	A	"	"	"	A	"	"	"	"	H	"								
		103	"	A	"	"	"	"	"	"	"	"	L	"	"	L	L	"								

See footnotes at end of table III.

TABLE III. Group A inspection for device type 01 – Continued.

Symbol	MIL-STD-883 method	Case E,F,X	Terminal conditions 1/																Measured terminal	Test limits						Unit
			1	2	3	4	5	6	7	8	9	10	11	12	13	14	15	16		Subgroup 7 T_C = +25°C		Subgroup 8 T_C = +125°C		Subgroup 8 T_C = -55°C		
		2	2	3	4	5	7	8	9	10	12	13	14	15	17	18	19	20								
		Test no.	$\overline{CLR}$	CLK	A	B	C	D	ENABLE P	GND	$\overline{LOAD}$	ENABLE T	QD	QC	QB	QA	RCO	V_{CC}		Min	Max	Min	Max	Min	Max	
Truth table tests 10/ 11/	3014	104	B	A	A	A	A	A	A	GND	A	A	L	L	L	L	L	4.5V	All outputs 12/ 13/							
		105	A	A	“	“	“	“	“	“	“	“	“	“	“	“	“	“								
		106	“	B	“	“	“	“	B	“	“	“	“	“	“	“	“	“								
		107	“	A	“	“	“	“	“	“	“	“	“	“	“	“	“	“								
		108	“	A	B	B	B	B	“	“	“	B	“	“	“	“	“	“								
		109	“	A	A	A	A	A	A	“	“	“	“	“	“	“	“	“								
		110	“	B	“	“	“	“	“	“	“	“	“	“	“	“	“	“								
		111	“	A	“	“	“	“	“	“	“	“	“	“	“	“	“	“								
		112	“	A	“	B	B	B	“	“	B	“	“	“	“	“	“	“								
		113	“	B	“	“	“	“	“	“	“	“	“	“	“	“	“	“								
		114	“	A	“	“	“	“	“	“	“	“	“	“	“	“	“	“								
		115	“	A	“	A	A	“	“	“	“	“	“	“	“	H	“	“								
		116	“	B	“	“	“	“	“	“	“	“	“	“	“	“	“	“								
		117	“	A	“	“	“	“	“	“	“	“	“	H	H	“	“	“								
		118	“	A	“	“	“	“	“	“	A	“	“	“	“	“	“	“								
		119	“	B	“	“	“	“	“	“	“	“	“	“	“	“	“	“								
		120	“	A	“	“	“	“	“	“	“	“	“	“	“	“	“	“								
		121	“	A	“	B	B	A	“	“	B	“	“	“	“	“	“	“								
		122	“	B	“	“	“	“	“	“	“	“	“	“	“	“	“	“								
		123	“	A	“	“	“	“	“	“	“	“	H	L	L	“	“	“								
		124	“	A	“	“	“	“	“	“	A	“	“	“	“	“	“	“								
		125	“	B	“	“	“	“	“	“	“	“	“	“	“	H	“	“								
		126	“	A	“	“	“	“	“	“	“	“	“	“	“	“	“	“								
		127	B	“	“	A	A	“	“	“	B	A	L	“	“	L	“	“								
		128	A	“	“	“	“	“	“	“	“	“	“	“	“	“	“	“								
		129	“	B	“	“	“	“	“	“	“	“	“	“	“	“	“	“								
		130	“	A	“	“	“	“	“	“	“	“	H	H	H	H	X	“								
		131	B	A	“	“	“	“	“	“	A	“	L	L	L	L	L	“								
		132	A	“	“	B	B	B	B	“	B	B	“	”	“	“	“	“								
		133	“	B	“	“	“	“	“	“	“	“	“	“	“	“	“	“								
		134	“	A	“	“	“	“	“	“	“	“	“	“	“	H	“	“								
		135	“	A	B	“	“	A	A	“	“	A	“	“	“	“	“	“								
		136	“	B	“	“	“	“	“	“	“	“	“	“	“	“	“	“								
		137	“	A	“	“	“	“	“	“	“	“	H	“	“	L	“	“								
		138	“	A	“	A	“	B	B	“	“	“	“	“	“	“	“	“								
		139	“	B	“	“	“	“	“	“	“	“	“	“	“	“	“	“								
		140	“	A	“	“	“	“	“	“	“	“	L	“	H	“	“	“								
		141	“	A	“	B	A	A	“	“	“	“	“	“	“	“	“	“								
		142	“	B	“	“	“	“	“	“	“	“	“	“	“	“	“	“								
		143	“	A	“	“	“	“	“	“	“	“	H	H	L	“	“	“								
		144	“	A	“	A	“	“	“	“	“	B	“	“	“	“	“	“								
		145	“	B	“	“	“	“	“	“	“	“	“	“	“	“	“	“								
		146	“	A	“	“	“	“	“	“	“	“	“	“	H	“	“	“								
		147	“	A	A	B	B	“	A	“	“	A	“	“	“	“	“	“								
		148	“	B	“	“	“	“	“	“	“	“	“	“	“	“	“	“								
		149	“	A	“	“	“	“	“	“	“	“	“	L	L	H	H	“								
		150	“	A	“	A	A	B	B	“	“	B	“	“	“	“	L	“								
		151	“	B	“	“	“	“	“	“	“	“	“	“	“	“	“	“								
		152	“	A	“	“	“	“	“	“	“	“	L	H	H	“	“	“								
		153	“	A	B	“	B	A	A	“	“	“	“	“	“	“	“	“								
		154	“	B	“	“	“	“	“	“	“	“	“	“	“	“	“	“								
		155	“	A	“	“	“	“	“	“	“	“	H	L	“	L	“	“								
		156	“	A	A	“	“	B	“	“	“	A	“	“	“	“	“	“								
		157	“	B	“	“	“	“	“	“	“	“	“	“	“	“	“	“								
		158	“	A	“	“	“	“	“	“	“	“	L	“	“	H	“	“								
		159	“	A	B	B	A	“	“	“	“	“	“	“	“	“	“	“								
		160	“	B	“	“	“	“	“	“	“	“	“	“	“	“	“	“								
		161	“	A	“	“	“	“	“	“	“	“	“	H	L	L	“	“								
		162	“	A	A	“	“	“	“	“	“	“	“	“	“	“	“	“								
		163	“	B	“	“	“	“	“	“	“	“	“	“	“	“	“	“								
		164	“	A	“	“	“	“	“	“	“	“	“	“	“	H	“	“								
		165	“	A	B	A	“	“	“	“	“	“	“	“	“	“	“	“								
		166	“	B	“	“	“	“	“	“	“	“	“	“	“	“	“	“								
		167	“	A	“	“	“	“	“	“	“	“	“	“	H	L	“	“								

See footnotes at end of table III.

TABLE III. Group A inspection for device type 01 – Continued.

Symbol	MIL-STD-883 method	Case E,F,X	Terminal conditions 1/																Measured terminal	Test limits						Unit
			1	2	3	4	5	6	7	8	9	10	11	12	13	14	15	16		Subgroup 9 T_C = +25°C 14/		Subgroup 10 T_C = +125°C		Subgroup 11 T_C = -55°C 14/		
		2	2	3	4	5	7	8	9	10	12	13	14	15	17	18	19	20								
		Test no.	$\overline{CLR}$	CLK	A	B	C	D	ENABLE P	GND	$\overline{LOAD}$	ENABLE T	QD	QC	QB	QA	RCO	V_{CC}		Min	Max	Min	Max	Min	Max	
f_{MAX} 15/	3003	168	4.5V	IN					4.5V	GND	4.5V	4.5V				OUT		4.5V	QA	28		21		28		MHz
t_{PLH1}	3003 Fig. 4	169	"	"					"	"	"	"				OUT		"	CLK to QA	8	36	8	48	8	36	ns
		170	"	"					"	"	"	"			OUT			"	CLK to QB	"	"	"	"	"	"	"
		171	"	"					"	"	"	"		OUT				"	CLK to QC	"	"	"	"	"	"	"
		172	"	"					"	"	"	"	OUT					"	CLK to QD	"	"	"	"	"	"	"
t_{PHL1}	3003 Fig. 4	173	"	"					"	"	"	"				OUT		"	CLK to QA	"	"	"	"	"	"	"
		174	"	"					"	"	"	"			OUT			"	CLK to QB	"	"	"	"	"	"	"
		175	"	"					"	"	"	"		OUT				"	CLK to QC	"	"	"	"	"	"	"
		176	"	"					"	"	"	"	OUT					"	CLK to QD	"	"	"	"	"	"	"
t_{PLH2}	3003 Fig. 4	177	"	"					"	"	"	"					OUT	"	CLK to RCO	"	38	"	50	"	38	"
t_{PHL2}	3003 Fig. 4	178	"	"					"	"	"	"					OUT	"	CLK to RCO	"	38	"	50	"	38	"
t_{PLH4}	3003 Fig. 4	179	"	7/					"	"	"	IN					OUT	"	ENABLE T to RCO	7	34	7	46	7	34	"
t_{PHL4}	3003 Fig. 4	180	"	7/					"	"	"	IN					OUT	"	ENABLE T to RCO	7	34	7	46	7	34	"
t_{PHL9}	3003 Fig. 4	181	IN	16/	4.5V					"	GND					OUT		"	$\overline{CLR}$ to QA	8	40	8	53	8	40	"
		182	"	"		4.5V				"	"				OUT			"	$\overline{CLR}$ to QB	"	"	"	"	"	"	"
		183	"	"			4.5V			"	"			OUT				"	$\overline{CLR}$ to QC	"	"	"	"	"	"	"
		184	"	"				4.5V		"	"		OUT					"	$\overline{CLR}$ to QD	"	"	"	"	"	"	"
t_{PHL10}	3003 Fig. 4	185	"	5/	4.5V	4.5V	4.5V	4.5V		"	"						OUT	"	$\overline{CLR}$ to RCO	"	38	"	51	"	38	"
t_{TLH}	3004 Fig. 4	186	4.5V	18/	GND	GND	GND	GND	4.5V	"	19/	4.5V				OUT		"	QA	3	15	3	20	3	15	"
		187	"	"	4.5V	GND	"	"	"	"	"	"			OUT			"	QB	"	"	"	"	"	"	"
		188	"	"	"	4.5V	"	"	"	"	"	"		OUT				"	QC	"	"	"	"	"	"	"
		189	"	"	"	4.5V	4.5V	"	"	"	"	"	OUT					"	QD	"	"	"	"	"	"	"
		190	"	"	GND	GND	GND	4.5V	"	"	"	"					OUT	"	RCO	"	"	"	"	"	"	"
t_{THL}	3004 Fig. 4	191	"	"	4.5V	GND	"	GND	"	"	"	"				OUT		"	QA	"	"	"	"	"	"	"
		192	"	"	"	4.5V	"	"	"	"	"	"			OUT			"	QB	"	"	"	"	"	"	"
		193	"	"	"	4.5V	4.5V	"	"	"	"	"		OUT				"	QC	"	"	"	"	"	"	"
		194	"	"	"	GND	GND	4.5V	"	"	"	"	OUT					"	QD	"	"	"	"	"	"	"
		195	"	"	"	GND	GND	4.5V	"	"	"	"					OUT	"	RCO	"	"	"	"	"	"	"

See footnotes at end of table.

TABLE III. Group A inspection for device type 02.

Symbol	MIL-STD-883 method	Case E,F,X 2 Test no.	Terminal conditions 1/ 1 $\overline{CLR}$	2 CLK	3 A	4 B	5 C	6 D	7 ENABLE P	8 GND	9 $\overline{LOAD}$	10 ENABLE T	11 QD	12 QC	13 QB	14 QA	15 RCO	16 V_{CC}	Measured terminal	Test limits Subgroup 1 T_C = +25°C Min	Subgroup 1 Max	Subgroup 2 T_C = +125°C Min	Subgroup 2 Max	Subgroup 3 T_C = -55°C Min	Subgroup 3 Max	Unit
$V_{IC(pos)}$ 1/		1	1mA							1/								GND	$\overline{CLR}$		1.5					V
		2		1mA						"								"	CLK		"					"
		3			1mA					"								"	A		"					"
		4				1mA				"								"	B		"					"
		5					1mA			"								"	C		"					"
		6						1mA		"								"	D		"					"
		7							1mA	"								"	ENABLE P		"					"
		8								"	1mA							"	$\overline{LOAD}$		"					"
		9								"		1mA						"	ENABLE T		"					"
$V_{IC(neg)}$		10	-1mA							GND								1/	$\overline{CLR}$		-1.5					"
		11		-1mA						"								"	CLK		"					"
		12			-1mA					"								"	A		"					"
		13				-1mA				"								"	B		"					"
		14					-1mA			"								"	C		"					"
		15						-1mA		"								"	D		"					"
		16							-1mA	"								"	ENABLE P		"					"
		17								"	-1mA							"	$\overline{LOAD}$		"					"
		18								"		-1mA						"	ENABLE T		"					"
I_{CCH}	3005	19	6.0V	GND	6.0V	6.0V	6.0V	6.0V	6.0V	"	GND	6.0V						6.0V	V_{CC}		0.2		20			µA
I_{CCL}	3005	20	GND	6.0V	6.0V	6.0V	6.0V	6.0V	GND	"	6.0V	GND						"	V_{CC}		0.2		20			µA
V_{OH3}	3006 2/	21	6.0V	IN	4.2V					"	GND					-20µA		"	QA	5.95		5.95		5.95		V
		22	"	"		4.2V				"	"				-20µA			"	QB	"		"		"		"
		23	"	"			4.2V			"	"			-20µA				"	QC	"		"		"		"
		24	"	"				4.2V		"	"		-20µA					"	QO	"		"		"		"
		25	"	"	4.2V	3/	3/	4.2V		"	"	4.2V					-20µA	"	RCO	"		"		"		"
V_{OH5}	3006 2/	26	"	"	4.2V					"	"					-5.2mA		"	QA	5.48		5.2		5.48		"
		27	"	"		4.2V				"	"				-5.2mA			"	QB	"		"		"		"
		28	"	"			4.2V			"	"			-5.2mA				"	QC	"		"		"		"
		29	"	"				4.2V		"	"		-5.2mA					"	QD	"		"		"		"
		30	"	"	4.2V	3/	3/	4.2V		"	"	4.2V					-5.2mA	"	RCO	"		"		"		"
V_{OL3}	3007 4/	31	"	"	1.2V					"						20µA		"	QA		0.05		0.05		0.05	"
		32	"	"		1.2V				"					20µA			"	QB		"		"		"	"
		33	"	"			1.2V			"				20µA				"	QC		"		"		"	"
		34	"	"				1.2V		"			20µA					"	QD		"		"		"	"
		35	"	"						"		1.2V					20µA	"	RCO		"		"		"	"
V_{OL5}	3007 4/	36	"	"	1.2V					GND						5.2mA		"	QA		0.26		0.4		0.26	"
		37	"	"		1.2V				"					5.2mA			"	QB		"		"		"	"
		38	"	"			1.2V			"				5.2mA				"	QC		"		"		"	"
		39	"	"				1.2V		"			5.2mA					"	QD		"		"		"	"
		40	"	"						"		1.2V					5.2mA	"	RCO		"		"		"	"
I_{OS4}	3011 5/	41	4.0V	"	4.0V				4.0V	"	GND	4.0V				GND		4.0V	QA	-10	-120	-10	-120	-10	-120	mA
		42	"	"		4.0V			"	"	"	"			GND			"	QB	"	"	"	"	"	"	"
		43	"	"			4.0V		"	"	"	"		GND				"	QC	"	"	"	"	"	"	"
		44	"	"				4.0V	"	"	"	"	GND					"	QD	"	"	"	"	"	"	"
		45	"	"	4.0V	6/	6/	4.0V	"	"	"	"					GND	"	RCO	"	"	"	"	"	"	"
I_{IH}	3010	46	6.0V	GND	GND	GND	GND	GND	GND	"	GND	GND						6.0V	CLR		0.05		0.1			µA
		47	GND	6.0V	GND	"	"	"	"	"	"	"						"	CLK		"		"			"
		48	"	GND	6.0V	"	"	"	"	"	"	"						"	A		"		"			"
		49	"	"	GND	6.0V	"	"	"	"	"	"						"	B		"		"			"
		50	"	"	"	GND	6.0V	"	"	"	"	"						"	C		"		"			"
		51	"	"	"	"	GND	6.0V	"	"	"	"						"	D		"		"			"
		52	"	"	"	"	"	GND	6.0V	"	"	"						"	ENABLE P		"		"			"
		53	"	"	"	"	"	"	GND	"	6.0V	"						"	$\overline{LOAD}$		"		"			"
		54	"	"	"	"	"	"	GND	"	GND	6.0V						"	ENABLE T		"		"			"

See footnotes at end of table III.

TABLE III. Group A inspection for device type 02 – Continued.

Symbol	MIL-STD-883 method	Case E,F,X	Terminal conditions 1/																Measured terminal	Test limits						Unit
			1	2	3	4	5	6	7	8	9	10	11	12	13	14	15	16		Subgroup 1 T_C = +25°C		Subgroup 2 T_C = +125°C		Subgroup 3 T_C = -55°C		
		2	2	3	4	5	7	8	9	10	12	13	14	15	17	18	19	20								
		Test no.	$\overline{CLR}$	CLK	A	B	C	D	ENABLE P	GND	$\overline{LOAD}$	ENABLE T	QD	QC	QB	QA	RCO	V_{CC}		Min	Max	Min	Max	Min	Max	
I_{IL}	3009	55	GND	6.0V	6.0V	6.0V	6.0V	6.0V	6.0V	GND	6.0V	6.0V						6.0V	$\overline{CLR}$		-0.05		-0.1			µA
		56	6.0V	GND	6.0V	"	"	"	"	"	"	"						"	CLK		"		"			"
		57	"	6.0V	GND	"	"	"	"	"	"	"						"	A		"		"			"
		58	"	"	6.0V	GND	"	"	"	"	"	"						"	B		"		"			"
		59	"	"	"	6.0V	GND	"	"	"	"	"						"	C		"		"			"
		60	"	"	"	"	6.0V	GND	"	"	"	"						"	D		"		"			"
		61	"	"	"	"	"	6.0V	GND	"	"	"						"	ENABLE P		"		"			"
		62	"	"	"	"	"	"	6.0V	"	GND	"						"	LOAD		"		"			"
		63	"	"	"	"	"	"	6.0V	"	6.0V	GND	7/	7/	7/	7/		"	ENABLE T		"		"			"
																				Subgroup 4 T_C = +25°C						
																				Min	Max					
C_C	3012	64		8/						GND								GND	CLK		15					pF
		65	8/							"								"	$\overline{CLR}$		"					"
		66								"	8/							"	LOAD		"					"
		67								"		8/						"	ENABLE T		"					"
		68							8/	"								"	ENABLE P		"					"
C_{IN}	3012	69			8/					"								"	A		10					"
		70				8/				"								"	B		"					"
		71					8/			"								"	C		"					"
		72						8/		"								"	D		"					"
																			Measured terminal 9/	Subgroup 7 T_C = +25°C		Subgroup 8 T_C = +125°C		Subgroup 8 T_C = -55°C		
																				Min	Max	Min	Max	Min	Max	
Truth table tests 10/ 11/	3014	73	B	A	A	A	A	A	A	GND	A	A	L	L	L	L	L	4.5V	All outputs 12/ 13/							
		74	A	A	B	B	B	B	"	"	"	B	"	"	"	"	"	"									
		75	"	B	A	A	A	A	"	"	"	A	"	"	"	"	"	"									
		76	"	A	A	A	A	A	"	"	"	A	"	"	"	H	"	"									
		77	"	A	B	B	B	B	"	"	"	B	"	"	"	"	"	"									
		78	"	B	A	A	A	A	"	"	"	A	"	"	"	"	"	"									
		79	"	A	A	A	A	A	"	"	"	A	"	"	H	L	"	"									
		80	"	A	B	B	B	B	"	"	"	B	"	"	"	"	"	"									
		81	"	B	A	A	A	A	"	"	"	A	"	"	"	"	"	"									
		82	"	A	A	A	A	A	"	"	"	A	"	"	"	H	"	"									
		83	"	A	B	B	B	B	"	"	"	B	"	"	"	"	"	"									
		84	"	B	A	A	A	A	"	"	"	A	"	"	"	"	"	"									
		85	"	A	A	A	A	A	"	"	"	A	"	"	"	L	"	"									
		86	"	A	B	B	B	B	"	"	"	B	"	"	"	"	"	"									
		87	"	B	A	A	A	A	"	"	"	A	"	"	"	"	"	"									
		88	"	A	A	A	A	A	"	"	"	A	"	"	"	H	"	"									
		89	"	A	B	B	B	B	"	"	"	B	"	"	"	"	"	"									
		90	"	B	A	A	A	A	"	"	"	A	"	"	"	"	"	"									
		91	"	A	A	A	A	A	"	"	"	A	"	"	"	L	"	"									
		92	"	A	B	B	B	B	"	"	"	B	"	"	"	"	"	"									
		93	"	B	A	A	A	A	"	"	"	A	"	"	"	"	"	"									
		94	"	A	A	A	A	A	"	"	"	A	"	"	"	H	"	"									
		95	"	A	B	B	B	B	"	"	"	B	"	"	"	"	"	"									
		96	"	B	A	A	A	A	"	"	"	A	"	"	"	"	"	"									
		97	"	A	A	A	A	A	"	"	"	A	H	"	L	L	"	"									
		98	"	A	B	B	B	B	"	"	"	B	"	"	"	"	"	"									
		99	"	B	A	A	A	A	"	"	"	A	"	"	"	"	"	"									
		100	"	A	A	A	A	A	"	"	"	A	"	"	"	H	H	"									
		101	"	A	B	B	B	B	"	"	"	B	"	"	"	"	L	"									
		102	"	B	A	A	A	A	"	"	"	A	H	"	"	"	L	"									
		103	"	A	"	"	"	"	"	"	"	"	H	"	H	L	L	"									

See footnotes at end of table III.

TABLE III. Group A inspection for device type 02 – Continued.

Symbol	MIL-STD-883 method	Case E,F,X	Terminal conditions 1/																Measured terminal	Test limits						Unit
			1	2	3	4	5	6	7	8	9	10	11	12	13	14	15	16		Subgroup 7 T_C = +25°C		Subgroup 8 T_C = +125°C		Subgroup 8 T_C = -55°C		
		2	2	3	4	5	7	8	9	10	12	13	14	15	17	18	19	20								
		Test no.	$\overline{CLR}$	CLK	A	B	C	D	ENABLE P	GND	$\overline{LOAD}$	ENABLE T	QD	QC	QB	QA	RCO	V_{CC}		Min	Max	Min	Max	Min	Max	
Truth table tests 10/ 11/	3014	104	A	A	B	B	B	B	A	GND	A	B	H	L	H	L	L	4.5V	All outputs 12/ 13/							
		105	"	B	A	A	A	A	"	"	"	A	"	"	"	"	"	"								
		106	"	A	A	A	A	A	"	"	"	A	"	"	"	H	"	"								
		107	"	A	B	B	B	B	"	"	"	B	"	"	"	"	"	"								
		108	"	B	A	A	A	A	"	"	"	A	"	"	"	"	"	"								
		109	"	A	A	A	A	A	"	"	"	A	"	H	L	L	"	"								
		110	"	A	B	B	B	B	"	"	"	B	"	"	"	"	"	"								
		111	"	B	A	A	A	A	"	"	"	A	"	"	"	"	"	"								
		112	"	A	A	A	A	A	"	"	"	A	"	"	"	H	"	"								
		113	"	A	B	B	B	B	"	"	"	B	"	"	"	"	"	"								
		114	"	B	A	A	A	A	"	"	"	A	"	"	"	"	"	"								
		115	"	A	A	A	A	A	"	"	"	A	"	"	H	L	"	"								
		116	"	A	B	B	B	B	"	"	"	B	"	"	"	"	"	"								
		117	"	B	A	A	A	A	"	"	"	A	"	"	"	"	"	"								
		118	"	A	A	A	A	A	"	"	"	A	"	"	"	H	H	"								
		119	"	A	B	B	B	B	"	"	"	B	"	"	"	"	L	"								
		120	"	B	A	A	A	A	"	"	"	A	"	"	"	"	H	"								
		121	B	A	"	"	"	"	"	"	"	"	L	L	L	L	L	"								
		122	A	"	"	"	"	"	"	"	"	"	"	"	"	"	"	"								
		123	"	"	"	"	"	"	B	"	"	"	"	"	"	"	"	"								
		124	"	B	"	"	"	"	B	"	"	B	"	"	"	"	"	"								
		125	"	A	"	"	"	"	A	"	"	"	"	"	"	"	"	"								
		126	"	B	"	B	B	B	"	"	"	"	"	"	"	"	"	"								
		127	"	A	"	"	"	"	"	"	"	"	"	"	"	"	"	"								
		128	"	B	"	"	"	"	"	"	B	"	"	"	"	"	"	"								
		129	"	A	"	"	"	"	"	"	"	"	"	"	"	H	"	"								
		130	"	A	"	A	A	"	"	"	"	"	"	"	"	"	"	"								
		131	"	B	"	A	A	"	"	"	"	"	"	"	"	"	"	"								
		132	"	A	"	"	"	"	"	"	B	"	"	H	H	"	"	"								
		133	"	A	"	"	"	"	"	"	A	"	"	"	"	"	"	"								
		134	"	B	"	"	"	"	"	"	"	"	"	"	"	"	"	"								
		135	"	A	"	"	"	"	"	"	"	"	"	"	"	"	"	"								
		136	"	B	"	B	B	A	"	"	B	"	"	"	"	"	"	"								
		137	"	A	"	B	B	"	"	"	"	"	H	L	L	"	"	"								
		138	B	A	"	A	A	"	"	"	"	A	L	"	"	L	"	"								
		139	A	A	"	"	"	"	"	"	"	"	"	"	"	"	"	"								
		140	"	B	"	"	"	"	"	"	"	"	"	"	"	"	"	"								
		141	"	A	"	"	"	"	"	"	"	"	H	H	H	H	H	"								
		142	"	B	"	"	"	"	"	"	"	"	"	"	"	"	"	"								
		143	B	A	"	"	"	"	"	"	A	"	L	L	L	L	L	"								
		144	A	A	B	"	"	"	"	"	B	"	"	"	"	"	"	"								
		145	"	B	"	"	"	"	"	"	"	"	"	"	"	"	"	"								
		146	"	A	"	"	"	"	"	"	"	"	H	H	H	"	"	"								
		147	"	A	"	"	B	B	"	"	"	"	"	"	"	"	"	"								
		148	"	B	"	"	"	"	"	"	"	"	"	"	"	"	"	"								
		149	"	A	"	"	"	"	"	"	"	"	L	L	"	"	"	"								
		150	"	A	A	"	"	"	"	"	"	"	"	"	"	"	"	"								
		151	"	B	"	"	"	"	"	"	"	"	"	"	"	"	"	"								
		152	"	A	"	"	"	"	"	"	"	"	"	"	"	H	"	"								
		153	"	A	B	B	A	"	"	"	"	"	"	"	"	"	"	"								
		154	"	B	"	"	"	"	"	"	"	"	"	"	"	"	"	"								
		155	"	A	"	"	"	"	"	"	"	"	"	H	L	L	"	"								
		156	"	A	A	"	"	"	"	"	"	"	"	"	"	"	"	"								
		157	"	B	"	"	"	"	"	"	"	"	"	"	"	"	"	"								
		158	"	A	"	"	"	"	"	"	"	"	"	"	"	H	"	"								
		159	"	A	B	A	"	"	"	"	"	"	"	"	"	"	"	"								
		160	"	B	"	"	"	"	"	"	"	"	"	"	"	"	"	"								
		161	"	A	"	"	"	"	"	"	"	"	"	"	H	L	"	"								
		162	"	A	B	B	"	"	"	"	"	"	"	"	"	"	"	"								
		163	"	B	"	"	"	"	"	"	"	"	"	"	"	"	"	"								
		164	"	A	"	"	"	"	"	"	"	"	H	L	L	"	"	"								
		165	"	A	A	A	"	"	"	"	"	"	"	"	"	"	"	"								
		166	"	B	"	"	"	"	"	"	"	"	"	"	"	"	"	"								
		167	"	A	"	"	"	"	"	"	"	"	"	"	H	H	"	"								

See footnotes at end of table III.

TABLE III. Group A inspection for device type 02 – Continued.

Symbol	MIL-STD-883 method	Case E,F,X	1	2	3	4	5	6	7	8	9	10	11	12	13	14	15	16	Measured terminal	Test limits Subgroup 7 T_C = +25°C Min	Subgroup 7 Max	Subgroup 8 T_C = +125°C Min	Subgroup 8 Max	Subgroup 8 T_C = -55°C Min	Subgroup 8 Max	Unit
		2	2	3	4	5	7	8	9	10	12	13	14	15	17	18	19	20								
		Test no.	$\overline{CLR}$	CLK	A	B	C	D	ENABLE P	GND	$\overline{LOAD}$	ENABLE T	QD	QC	QB	QA	RCO	V_{CC}								
Truth table tests 10/ 11/	3014	168	A	A	B	B	A	B	A	GND	B	A	H	L	H	H	L	4.5V	All outputs 12/ 13/							
		169	"	B	"	"	"	"	"	"	"	"	"	"	"	"	"	"								
		170	"	A	"	"	"	"	"	"	"	"	"	H	L	L	"	"								
		171	"	A	A	"	"	"	"	"	"	"	"	"	"	"	"	"								
		172	"	B	"	"	"	"	"	"	"	"	"	"	"	"	"	"								
		173	"	A	"	"	"	"	"	"	"	"	"	"	"	H	"	"								
																				Subgroup 9 T_C = +25°C 14/ Min	Subgroup 9 Max	Subgroup 10 T_C = +125°C Min	Subgroup 10 Max	Subgroup 11 T_C = -55°C 14/ Min	Subgroup 11 Max	
f_{MAX}	3003 Fig. 4	174	4.5V	IN					4.5V	GND	4.5V	4.5V				OUT		4.5V	QA	28		21		28		MHz
t_{PLH1}	3003 Fig. 4	174	"	"					"	"	"	"				OUT		"	CLK to QA	8	36	8	48	8	36	ns
		176	"	"					"	"	"	"			OUT			"	CLK to QB	"	"	"	"	"	"	"
		177	"	"					"	"	"	"		OUT				"	CLK to QC	"	"	"	"	"	"	"
		178	"	"					"	"	"	"	OUT					"	CLK to QD	"	"	"	"	"	"	"
t_{PHL1}	3003 Fig. 4	179	"	"					"	"	"	"				OUT		"	CLK to QA	"	"	"	"	"	"	"
		180	"	"					"	"	"	"			OUT			"	CLK to QB	"	"	"	"	"	"	"
		181	"	"					"	"	"	"		OUT				"	CLK to QC	"	"	"	"	"	"	"
		182	"	"					"	"	"	"	OUT					"	CLK to QD	"	"	"	"	"	"	"
t_{PLH2}	3003 Fig. 4	183	"	"					"	"	"	"					OUT	"	CLK to RCO	"	38	"	50	"	38	"
t_{PHL2}	3003 Fig. 4	184	"	"					"	"	"	"					"	"	CLK to RCO	"	38	"	50	"	38	"
t_{PLH4}	3003 Fig. 4	185	"	7/					"	"	"	IN					"	"	ENABLE T to RCO	7	34	7	46	7	34	"
t_{PHL4}	3003 Fig. 4	186	"	7/					"	"	"	IN					"	"	ENABLE T to RCO	7	34	7	46	7	34	"
t_{PHL9}	3003 Fig. 4	187	IN	16/	4.5V					"	GND					OUT		"	$\overline{CLR}$ to QA	8	40	8	53	8	40	"
		188	"	"		4.5V				"	"				OUT			"	$\overline{CLR}$ to QB	"	"	"	"	"	"	"
		189	"	"			4.5V			"	"			OUT				"	$\overline{CLR}$ to QC	"	"	"	"	"	"	"
		190	"	"				4.5V		"	"		OUT					"	$\overline{CLR}$ to QD	"	"	"	"	"	"	"
t_{PHL10}	3003 Fig. 4	191	"	5/	4.5V	4.5V	4.5V	4.5V		"	"						OUT	"	$\overline{CLR}$ to RCO	"	38	"	51	"	38	"
t_{TLH}	3004 Fig. 4	192	4.5V	18/	GND	GND	GND	GND	4.5V	"	19/	4.5V				OUT		"	QA	3	15	3	20	3	15	"
		193	"	"	4.5V	GND	"	"	"	"	"	"			OUT			"	QB	"	"	"	"	"	"	"
		194	"	"	"	4.5V	"	"	"	"	"	"		OUT				"	QC	"	"	"	"	"	"	"
		195	"	"	"	"	4.5V	"	"	"	"	"	OUT					"	QD	"	"	"	"	"	"	"
		196	"	"	GND	"	4.5V	4.5V	"	"	"	"					OUT	"	RCO	"	"	"	"	"	"	"
t_{THL}	3004 Fig. 4	197	"	"	4.5V	GND	GND	GND	"	"	"	"				OUT		"	QA	"	"	"	"	"	"	"
		198	"	"	"	4.5V	GND	"	"	"	"	"			OUT			"	QB	"	"	"	"	"	"	"
		199	"	"	"	4.5V	4.5V	"	"	"	"	"		OUT				"	QC	"	"	"	"	"	"	"
		200	"	"	"	GND	GND	4.5V	"	"	"	"	OUT					"	QD	"	"	"	"	"	"	"
		201	"	"	"	4.5V	4.5V	4.5V	"	"	"	"					OUT	"	RCO	"	"	"	"	"	"	"

See footnotes at end of table III.

TABLE III. Group A inspection for device type 03.

Symbol	MIL-STD-883 method	Case E,F,X	Terminal conditions 1/																Measured terminal	Test limits						Unit
			1	2	3	4	5	6	7	8	9	10	11	12	13	14	15	16		Subgroup 1 T_C = +25°C		Subgroup 2 T_C = +125°C		Subgroup 3 T_C = -55°C		
		2	2	3	4	5	7	8	9	10	12	13	14	15	17	18	19	20								
		Test no.	$\overline{CLR}$	CLK	A	B	C	D	ENABLE P	GND	$\overline{LOAD}$	ENABLE T	QD	QC	QB	QA	RCO	V_{CC}		Min	Max	Min	Max	Min	Max	
$V_{IC(pos)}$		1	1mA							1/								GND	$\overline{CLR}$		1.5					V
		2		1mA						"								"	CLK		"					"
		3			1mA					"								"	A		"					"
		4				1mA				"								"	B		"					"
		5					1mA			"								"	C		"					"
		6						1mA		"								"	D		"					"
		7							1mA	"								"	ENABLE P		"					"
		8								"	1mA							"	LOAD		"					"
		9								"		1mA						"	ENABLE T		"					"
$V_{IC(neg)}$		10	-1mA							GND								1/	$\overline{CLR}$		-1.5					"
		11		-1mA						"								"	CLK		"					"
		12			-1mA					"								"	A		"					"
		13				-1mA				"								"	B		"					"
		14					-1mA			"								"	C		"					"
		15						-1mA		"								"	D		"					"
		16							-1mA	"								"	ENABLE P		"					"
		17								"	-1mA							"	LOAD		"					"
		18								"		-1mA						"	ENABLE T		"					"
I_{CCH}	3005	19	6.0V	GND	6.0V	6.0V	6.0V	6.0V	6.0V	"	GND	6.0V						6.0V	V_{CC}		0.2		20			µA
I_{CCL}	3005	20	GND	6.0V	6.0V	6.0V	6.0V	6.0V	GND	"	6.0V	GND						"	V_{CC}		0.2		20			µA
V_{OH3}	3006 2/	21	4.2V	IN	4.2V					"	GND					-20µA		"	QA	5.95		5.95		5.95		V
		22	"	"		4.2V				"	"				-20µA			"	QB	"		"		"		"
		23	"	"			4.2V			"	"			-20µA				"	QC	"		"		"		"
		24	"	"				4.2V		"	"		-20µA					"	QO	"		"		"		"
		25	"	"	4.2V	3/	3/	4.2V		"	"	4.2V					-20µA	"	RCO	"		"		"		"
V_{OH5}	3006 2/	26	"	"	4.2V					"	"					-5.2mA		"	QA	5.48		5.2		5.48		"
		27	"	"		4.2V				"	"				-5.2mA			"	QB	"		"		"		"
		28	"	"			4.2V			"	"			-5.2mA				"	QC	"		"		"		"
		29	"	"				4.2V		"	"		-5.2mA					"	QD	"		"		"		"
		30	"	"	4.2V	3/	3/	4.2V		"	"	4.2V					-5.2mA	"	RCO	"		"		"		"
V_{OL3}	3007 4/	31	"	"	1.2V					"						20µA		"	QA		0.05		0.05		0.05	"
		32	"	"		1.2V				"					20µA			"	QB		"		"		"	"
		33	"	"			1.2V			"				20µA				"	QC		"		"		"	"
		34	"	"				1.2V		"			20µA					"	QD		"		"		"	"
		35	"	"						"		1.2V					20µA	"	RCO		"		"		"	"
V_{OL5}	3007 4/	36	"	"	1.2V					GND						5.2mA		"	QA		0.26		0.4		0.26	"
		37	"	"		1.2V				"					5.2mA			"	QB		"		"		"	"
		38	"	"			1.2V			"				5.2mA				"	QC		"		"		"	"
		39	"	"				1.2V		"			5.2mA					"	QD		"		"		"	"
		40	"	"						"		1.2V					5.2mA	"	RCO		"		"		"	"
I_{OS4}	3011 5/	41	4.0V	"	4.0V				4.0V	"	GND	4.0V				GND		4.0V	QA	-10	-120	-10	-120	-10	-120	mA
		42	"	"		4.0V			"	"	"	"			GND			"	QB	"	"	"	"	"	"	"
		43	"	"			4.0V		"	"	"	"		GND				"	QC	"	"	"	"	"	"	"
		44	"	"				4.0V	"	"	"	"	GND					"	QD	"	"	"	"	"	"	"
		45	"	"	4.0V	6/	6/	4.0V	"	"	"	"					GND	"	RCO	"	"	"	"	"	"	"
I_{IH}	3010	46	6.0V	GND	GND	GND	GND	GND	GND	"	GND	GND						6.0V	$\overline{CLR}$		0.05		0.1			µA
		47	GND	6.0V	GND	"	"	"	"	"	"	"						"	CLK		"		"			"
		48	"	GND	6.0V	"	"	"	"	"	"	"						"	A		"		"			"
		49	"	"	GND	6.0V	"	"	"	"	"	"						"	B		"		"			"
		50	"	"	"	GND	6.0V	"	"	"	"	"						"	C		"		"			"
		51	"	"	"	"	GND	6.0V	"	"	"	"						"	D		"		"			"
		52	"	"	"	"	"	GND	6.0V	"	"	"						"	ENABLE P		"		"			"
		53	"	"	"	"	"	"	GND	"	6.0V	"						"	LOAD		"		"			"
		54	"	"	"	"	"	"	GND	"	GND	6.0V						"	ENABLE T		"		"			"

See footnotes at end of table III.

TABLE III. Group A inspection for device type 03 – Continued.

Symbol	MIL-STD-883 method	Case E,F,X	Terminal conditions 1/																Measured terminal	Test limits						Unit
			1	2	3	4	5	6	7	8	9	10	11	12	13	14	15	16		Subgroup 1 T_C = +25°C		Subgroup 2 T_C = +125°C		Subgroup 3 T_C = -55°C		
		2	2	3	4	5	7	8	9	10	12	13	14	15	17	18	19	20								
		Test no.	$\overline{CLR}$	CLK	A	B	C	D	ENABLE P	GND	$\overline{LOAD}$	ENABLE T	QD	QC	QB	QA	RCO	V_{CC}		Min	Max	Min	Max	Min	Max	
I_{IL}	3009	55	GND	6.0V	6.0V	6.0V	6.0V	6.0V	6.0V	GND	6.0V	6.0V						6.0V	$\overline{CLR}$		-0.05		-0.1			µA
		56	6.0V	GND	6.0V	"	"	"	"	"	"	"						"	CLK		"		"			"
		57	"	6.0V	GND	"	"	"	"	"	"	"						"	A		"		"			"
		58	"	"	6.0V	GND	"	"	"	"	"	"						"	B		"		"			"
		59	"	"	"	6.0V	GND	"	"	"	"	"						"	C		"		"			"
		60	"	"	"	"	6.0V	GND	"	"	"	"						"	D		"		"			"
		61	"	"	"	"	"	6.0V	GND	"	"	"						"	ENABLE P		"		"			"
		62	"	"	"	"	"	"	6.0V	"	GND	"						"	LOAD		"		"			"
		63	"	"	"	"	"	"	6.0V	"	6.0V	GND	7/	7/	7/	7/		"	ENABLE T		"		"			"
																				Subgroup 4 T_C = +25°C						
																				Min	Max					
C_C	3012	64		8/						GND								GND	$\overline{CLK}$		15					pF
		65	8/							"								"	$\overline{CLR}$		"					"
		66								"	8/							"	LOAD		"					"
		67								"		8/						"	ENABLE T		"					"
		68							8/	"								"	ENABLE P		"					"
C_{IN}	3012	69			8/					"								"	A		10					"
		70				8/				"								"	B		"					"
		71					8/			"								"	C		"					"
		72						8/		"								"	D		"					"
																			Measured terminal 9/	Subgroup 7 T_C = +25°C		Subgroup 8 T_C = +125°C		Subgroup 8 T_C = -55°C		
																				Min	Max	Min	Max	Min	Max	
Truth table tests 10/ 11/	3014	73	B	B	B	B	B	B	A	GND	B	A	X	X	X	X	X	4.5V	All outputs 12/ 13/							
		74	B	A	"	"	"	"	"	"	"	"	L	L	L	L	L	"								
		75	A	B	"	"	"	"	"	"	"	"	"	"	"	"	"	"								
		76	A	A	"	"	"	"	"	"	"	"	"	"	"	"	"	"								
		77	B	A	A	A	A	A	"	"	A	"	"	"	"	"	"	"								
		78	B	B	"	"	"	"	"	"	"	"	"	"	"	"	"	"								
		79	B	A	"	"	"	"	"	"	"	"	"	"	"	"	"	"								
		80	A	A	B	B	B	B	"	"	"	B	"	"	"	"	"	"								
		81	"	B	A	A	A	A	"	"	"	A	"	"	"	"	"	"								
		82	"	A	A	A	A	A	"	"	"	A	"	"	"	H	"	"								
		83	"	A	B	B	B	B	"	"	"	B	"	"	"	"	"	"								
		84	"	B	A	A	A	A	"	"	"	A	"	"	"	"	"	"								
		85	"	A	A	A	A	A	"	"	"	A	"	"	H	L	"	"								
		86	"	A	B	B	B	B	"	"	"	B	"	"	"	"	"	"								
		87	"	B	A	A	A	A	"	"	"	A	"	"	"	"	"	"								
		88	"	A	A	A	A	A	"	"	"	A	"	"	"	H	"	"								
		89	"	A	B	B	B	B	"	"	"	B	"	"	"	"	"	"								
		90	"	B	A	A	A	A	"	"	"	A	"	"	"	"	"	"								
		91	"	A	A	A	A	A	"	"	"	A	"	H	L	L	"	"								
		92	"	A	B	B	B	B	"	"	"	B	"	"	"	"	"	"								
		93	"	B	A	A	A	A	"	"	"	A	"	"	"	"	"	"								
		94	"	A	A	A	A	A	"	"	"	A	"	"	"	H	"	"								
		95	"	A	B	B	B	B	"	"	"	B	"	"	"	"	"	"								
		96	"	B	A	A	A	A	"	"	"	A	"	"	"	"	"	"								
		97	"	A	A	A	A	A	"	"	"	A	"	"	H	L	"	"								
		98	"	A	B	B	B	B	"	"	"	B	"	"	"	"	"	"								
		99	"	B	A	A	A	A	"	"	"	A	"	"	"	"	"	"								
		100	"	A	A	A	A	A	"	"	"	A	"	"	"	"	H	"								
		101	"	A	B	B	B	B	"	"	"	B	"	"	"	"	"	"								
		102	"	B	A	A	A	A	"	"	"	A	"	"	"	H	L	"								
		103	"	A	A	A	A	A	"	"	"	A	H	L	L	L	"	"								
		104	"	A	B	B	B	B	"	"	"	B	"	"	"	"	"	"								

See footnotes at end of table III.

TABLE III. Group A inspection for device type 03 – Continued.

Symbol	MIL-STD-883 method	Case E,F,X 2 Test no.	Terminal conditions 1/ 1 $\overline{CLR}$	2 CLK	3 A	4 B	5 C	6 D	7 ENABLE P	8 GND	9 $\overline{LOAD}$	10 ENABLE T	11 QD	12 QC	13 QB	14 QA	15 RCO	16 V_{CC}	Measured terminal	Test limits Subgroup 7 T_C = +25°C Min	Subgroup 7 Max	Subgroup 8 T_C = +125°C Min	Subgroup 8 Max	Subgroup 8 T_C = -55°C Min	Subgroup 8 Max	Unit
Truth table tests 10/ 11/	3014	105	A	B	B	B	B	B	A	GND	A	B	H	L	L	L	L	4.5V	All outputs 12/ 13/							
		106	“	B	A	A	A	A	“	“	“	A	“	“	“	“	“	“								
		107	“	A	A	A	A	A	“	“	“	A	“	“	“	H	H	“								
		108	“	A	B	B	B	B	“	“	“	B	“	“	“	“	L	“								
		109	“	B	A	A	A	A	“	“	“	A	“	“	“	“	H	“								
		110	“	A	“	“	“	“	“	“	“	A	L	“	“	L	L	“								
		111	“	A	“	“	“	“	B	“	“	“	“	“	“	“	“	“								
		112	“	B	“	“	“	“	“	“	“	“	“	“	“	“	“	“								
		113	“	A	“	“	“	“	“	“	“	“	“	“	“	“	“	“								
		114	“	B	“	“	“	“	A	“	“	B	“	“	“	“	“	“								
		115	“	A	“	B	B	B	“	“	“	“	“	“	“	“	“	“								
		116	“	B	“	“	“	“	“	“	B	“	“	“	“	“	“	“								
		117	“	A	“	“	“	“	“	“	“	“	“	“	“	H	“	“								
		118	“	A	“	A	A	“	“	“	“	“	“	“	“	“	“	“								
		119	“	B	“	“	“	“	“	“	“	“	“	“	“	“	“	“								
		120	“	A	“	“	“	“	“	“	“	“	“	H	H	“	“	“								
		121	“	A	“	“	“	“	“	“	A	“	“	“	“	“	“	“								
		122	“	B	“	“	“	“	“	“	“	“	“	“	“	“	“	“								
		123	“	A	“	“	“	“	“	“	“	“	“	“	“	“	“	“								
		124	“	B	“	B	B	A	B	“	B	“	“	“	“	“	“	“								
		125	“	A	“	“	“	“	“	“	B	“	H	L	L	“	“	“								
		126	“	A	“	“	“	“	“	“	A	“	“	“	“	“	“	“								
		127	“	B	“	“	“	“	“	“	“	“	“	“	“	“	“	“								
		128	“	A	“	“	“	“	“	“	“	“	“	“	“	“	“	“								
		129	B	B	“	A	A	“	“	“	“	A	“	“	“	“	H	“								
		130	B	A	“	“	“	“	“	“	“	“	L	“	“	L	L	“								
		131	A	A	“	“	“	“	“	“	B	“	“	“	“	“	“	“								
		132	“	B	“	B	B	“	A	“	“	“	“	“	“	“	“	“								
		133	“	A	“	“	“	“	“	“	“	“	H	“	“	H	H	“								
		134	“	B	“	“	“	“	“	“	“	“	“	“	“	“	“	“								
		135	“	A	“	“	“	“	“	“	“	“	“	“	“	“	“	“								
		136	B	B	“	“	“	“	“	“	“	“	“	“	“	“	“	“								
		137	B	A	“	“	“	“	“	“	“	“	L	“	“	L	L	“								
		138	A	B	B	“	“	B	“	“	“	B	“	“	“	“	“	“								
		139	“	B	“	A	“	“	“	“	“	“	“	“	“	“	“	“								
		140	“	A	“	A	“	“	“	“	“	“	“	“	H	“	“	“								
		141	“	A	“	B	“	A	“	“	“	“	“	“	“	“	“	“								
		142	“	B	“	“	“	“	“	“	“	“	“	“	“	“	“	“								
		143	“	A	“	“	“	“	“	“	“	“	H	“	L	“	“	“								
		144	“	A	“	“	“	B	“	“	“	A	“	“	“	“	“	“								
		145	“	B	“	“	“	“	“	“	“	“	“	“	“	“	“	“								
		146	“	A	“	“	“	“	“	“	“	“	L	“	“	“	“	“								
		147	“	A	“	A	A	A	“	“	“	“	“	“	“	“	“	“								
		148	“	B	“	“	“	“	“	“	“	“	“	“	“	“	“	“								
		149	“	A	“	“	“	“	“	“	“	“	H	H	H	“	“	“								
		150	“	A	A	“	B	B	“	“	“	“	“	“	“	“	“	“								
		151	“	B	“	“	“	“	“	“	“	“	“	“	“	“	“	“								
		152	“	A	“	“	“	“	“	“	“	“	L	L	“	H	“	“								
		153	“	A	B	B	A	“	“	“	“	“	“	“	“	“	“	“								
		154	“	B	“	“	“	“	“	“	“	“	“	“	“	“	“	“								
		155	“	A	“	“	“	“	“	“	“	“	“	H	L	L	“	“								
		156	“	A	A	“	“	“	“	“	“	“	“	“	“	“	“	“								
		157	“	B	“	“	“	“	“	“	“	“	“	“	“	“	“	“								
		158	“	A	“	“	“	“	“	“	“	“	“	“	“	H	“	“								
		159	“	A	B	A	“	“	“	“	“	“	“	“	“	“	“	“								
		160	“	B	“	“	“	“	“	“	“	“	“	“	“	“	“	“								
		161	“	A	“	“	“	“	“	“	“	“	“	“	H	L	“	“								
		162	“	A	“	B	B	A	“	“	“	“	“	“	“	“	“	“								
		163	“	B	“	“	“	“	“	“	“	“	“	“	“	“	“	“								
		164	“	A	“	“	“	“	“	“	“	“	H	L	L	“	“	“								
		165	“	A	A	“	“	“	“	“	“	“	“	“	“	“	“	“								
		166	”	B	“	“	“	“	“	“	“	“	“	“	“	“	“	“								
		167	“	A	“	“	“	“	“	“	“	“	“	“	“	H	H	“								

See footnotes at end of table III.

TABLE III. Group A inspection for device type 03 – Continued.

Symbol	MIL-STD-883 method	Case E,F,X	Terminal conditions 1/																Measured terminal	Test limits						Unit
			1	2	3	4	5	6	7	8	9	10	11	12	13	14	15	16		Subgroup 7 T_C = +25°C		Subgroup 8 T_C = +125°C		Subgroup 8 T_C = -55°C		
		2	2	3	4	5	7	8	9	10	12	13	14	15	17	18	19	20								
		Test no.	$\overline{CLR}$	CLK	A	B	C	D	ENABLE P	GND	$\overline{LOAD}$	ENABLE T	QD	QC	QB	QA	RCO	V_{CC}		Min	Max	Min	Max	Min	Max	
Truth table tests 10/ 11/	3014	168	A	A	A	A	A	A	A	GND	A	A	H	L	L	H	H	4.5V	All outputs 12/ 13/							
		169	"	B	"	"	"	"	"	"	"	"	"	"	"	"	"	"									
		170	"	A	"	"	"	"	"	"	"	"	L	"	"	L	L	"									
																				Subgroup 9 T_C=+25°C 14/		Subgroup 10 T_C=+125°C		Subgroup 11 T_C = -55°C 14/		
																				Min	Max	Min	Max	Min	Max	
f_{MAX} 15/	3003 Fig. 4	171	4.5V	IN					4.5V	GND	4.5V	4.5V				OUT		4.5V	QA	28		21		28		MHz
t_{PLH1}	3003 Fig. 4	172	4.5V	"					"	"	"	"				OUT		"	CLK to QA	8	36	8	48	8	36	ns
		173	"	"					"	"	"	"			OUT			"	CLK to QB	"	"	"	"	"	"	"
		174	"	"					"	"	"	"		OUT				"	CLK to QC	"	"	"	"	"	"	"
		175	"	"					"	"	"	"	OUT					"	CLK to QD	"	"	"	"	"	"	"
t_{PHL1}	3003 Fig. 4	176	4.5V	"					"	"	"	"				OUT		"	CLK to QA	"	"	"	"	"	"	"
		177	"	"					"	"	"	"			OUT			"	CLK to QB	"	"	"	"	"	"	"
		178	"	"					"	"	"	"		OUT				"	CLK to QC	"	"	"	"	"	"	"
		179	"	"					"	"	"	"	OUT					"	CLK to QD	"	"	"	"	"	"	"
t_{PLH2}	3003 Fig. 4	180	"	"					"	"	"	"					OUT	"	CLK to RCO	"	38	"	50	"	38	"
t_{PHL2}	3003 Fig. 4	181	"	"					"	"	"	"					"	"	CLK to RCO	"	38	"	50	"	38	"
t_{PLH4}	3003 Fig. 4	182	"	7/					"	"	"	IN					"	"	ENABLE T to RCO	7	34	7	46	7	34	"
t_{PHL4}	3003 Fig. 4	183	"	7/					"	"	"	IN					"	"	ENABLE T to RCO	7	34	7	46	7	34	"
t_{TLH}	3004 Fig. 4	184	4.5V	18/	GND	GND	GND	GND	"	"	19/	4.5V				OUT		"	QA	3	15	3	20	3	15	"
		185	"	"	4.5V	GND	"	"	"	"	"	"			OUT			"	QB	"	"	"	"	"	"	"
		186	"	"	"	4.5V	"	"	"	"	"	"		OUT				"	QC	"	"	"	"	"	"	"
		187	"	"	"	4.5V	4.5V	"	"	"	"	"	OUT					"	QD	"	"	"	"	"	"	"
		188	"	"	GND	GND	GND	4.5V	"	"	"	"					OUT	"	RCO	"	"	"	"	"	"	"
t_{THL}	3004 Fig. 4	189	"	"	4.5V	GND	"	GND	"	"	"	"				OUT		"	QA	"	"	"	"	"	"	"
		190	"	"	"	4.5V	"	"	"	"	"	"			OUT			"	QB	"	"	"	"	"	"	"
		191	"	"	"	4.5V	4.5V	"	"	"	"	"		OUT				"	QC	"	"	"	"	"	"	"
		192	"	"	"	GND	GND	4.5V	"	"	"	"	OUT					"	QD	"	"	"	"	"	"	"
		193	"	"	"	GND	GND	4.5V	"	"	"	"					OUT	"	RCO	"	"	"	"	"	"	"

See footnotes at end of table III.

TABLE III. Group A inspection for device type 04.

Symbol	MIL-STD-883 method	Case E,F,X 2 Test no.	Terminal conditions 1/ 1 $\overline{CLR}$	2 CLK	3 A	4 B	5 C	6 D	7 ENABLE P	8 GND	9 $\overline{LOAD}$	10 ENABLE T	11 QD	12 QC	13 QB	14 QA	15 RCO	16 V_{CC}	Measured terminal	Test limits Subgroup 1 T_C = +25°C Min	Subgroup 1 Max	Subgroup 2 T_C = +125°C Min	Subgroup 2 Max	Subgroup 3 T_C = -55°C Min	Subgroup 3 Max	Unit
$V_{IC(pos)}$ 1/		1	1mA							1/								GND	$\overline{CLR}$		1.5					V
		2		1mA						"								"	CLK		"					"
		3			1mA					"								"	A		"					"
		4				1mA				"								"	B		"					"
		5					1mA			"								"	C		"					"
		6						1mA		"								"	D		"					"
		7							1mA	"								"	$\overline{ENABLE}$ P		"					"
		8								"	1mA							"	$\overline{LOAD}$		"					"
		9								"		1mA						"	ENABLE T		"					"
$V_{IC(neg)}$		10	-1mA							GND								1/	$\overline{CLR}$		-1.5					"
		11		-1mA						"								"	CLK		"					"
		12			-1mA					"								"	A		"					"
		13				-1mA				"								"	B		"					"
		14					-1mA			"								"	C		"					"
		15						-1mA		"								"	D		"					"
		16							-1mA	"								"	$\overline{ENABLE}$ P		"					"
		17								"	-1mA							"	$\overline{LOAD}$		"					"
		18								"		-1mA						"	ENABLE T		"					"
I_{CCH}	3005	19	6.0V	GND	6.0V	6.0V	6.0V	6.0V	6.0V	"	GND	6.0V						6.0V	V_{CC}		0.2		20			µA
I_{CCL}	3005	20	GND	6.0V	6.0V	6.0V	6.0V	6.0V	GND	"	6.0V	GND						"	V_{CC}		0.2		20			µA
V_{OH3}	3006 2/	21	6.0V	IN	4.2V					"	GND					-20µA		"	QA	5.95		5.95		5.95		V
		22	"	"		4.2V				"	"				-20µA			"	QB	"		"		"		"
		23	"	"			4.2V			"	"			-20µA				"	QC	"		"		"		"
		24	"	"				4.2V		"	"		-20µA					"	QD	"		"		"		"
		25	"	"	4.2V	3/	3/	4.2V		"	"	4.2V					-20µA	"	RCO	"		"		"		"
V_{OH5}	3006 2/	26	"	"	4.2V					"	"					-5.2mA		"	QA	5.48		5.2		5.48		"
		27	"	"		4.2V				"	"				-5.2mA			"	QB	"		"		"		"
		28	"	"			4.2V			"	"			-5.2mA				"	QC	"		"		"		"
		29	"	"				4.2V		"	"		-5.2mA					"	QD	"		"		"		"
		30	"	"	4.2V	3/	3/	4.2V		"	"	4.2V					-5.2mA	"	RCO	"		"		"		"
V_{OL3}	3007 4/	31	"	"	1.2V					"						20µA		"	QA		0.05		0.05		0.05	"
		32	"	"		1.2V				"					20µA			"	QB		"		"		"	"
		33	"	"			1.2V			"				20µA				"	QC		"		"		"	"
		34	"	"				1.2V		"			20µA					"	QD		"		"		"	"
		35	"	"						"		1.2V					20µA	"	RCO		"		"		"	"
V_{OL5}	3007 4/	36	"	"	1.2V					GND						5.2mA		"	QA		0.26		0.4		0.26	"
		37	"	"		1.2V				"					5.2mA			"	QB		"		"		"	"
		38	"	"			1.2V			"				5.2mA				"	QC		"		"		"	"
		39	"	"				1.2V		"			5.2mA					"	QD		"		"		"	"
		40	"	"						"		1.2V					5.2mA	"	RCO		"		"		"	"
I_{OS4}	3011 5/	41	4.0V	"	4.0V				4.0V	"	GND	4.0V				GND		4.0V	QA	-10	-120	-10	-120	-10	-120	mA
		42	"	"		4.0V			"	"	"	"			GND			"	QB	"	"	"	"	"	"	"
		43	"	"			4.0V		"	"	"	"		GND				"	QC	"	"	"	"	"	"	"
		44	"	"				4.0V	"	"	"	"	GND					"	QD	"	"	"	"	"	"	"
		45	"	"	4.0V	6/	6/	4.0V	"	"	"	"					GND	"	RCO	"	"	"	"	"	"	"
I_{IH}	3010	46	6.0V	GND	GND	GND	GND	GND	GND	"	GND	GND						6.0V	$\overline{CLR}$		0.05		0.1			µA
		47	GND	6.0V	GND	"	"	"	"	"	"	"						"	CLK		"		"			"
		48	"	GND	6.0V	"	"	"	"	"	"	"						"	A		"		"			"
		49	"	"	GND	6.0V	"	"	"	"	"	"						"	B		"		"			"
		50	"	"	"	GND	6.0V	"	"	"	"	"						"	C		"		"			"
		51	"	"	"	"	GND	6.0V	"	"	"	"						"	D		"		"			"
		52	"	"	"	"	"	GND	6.0V	"	"	"						"	$\overline{ENABLE}$ P		"		"			"
		53	"	"	"	"	"	"	GND	"	6.0V	"						"	$\overline{LOAD}$		"		"			"
		54	"	"	"	"	"	"	GND	"	GND	6.0V						"	ENABLE T		"		"			"

See footnotes at end of table III.

TABLE III. Group A inspection for device type 04 – Continued.

Symbol	MIL-STD-883 method	Case E,F,X 2 Test no.	Terminal conditions 1/ 1 $\overline{CLR}$	2 CLK	3 A	4 B	5 C	6 D	7 ENABLE P	8 GND	9 $\overline{LOAD}$	10 ENABLE T	11 QD	12 QC	13 QB	14 QA	15 RCO	16 V_{CC}	Measured terminal	Test limits Subgroup 1 T_C = +25°C Min	Subgroup 1 Max	Subgroup 2 T_C = +125°C Min	Subgroup 2 Max	Subgroup 3 T_C = -55°C Min	Subgroup 3 Max	Unit
I_{IL}	3009	55	GND	6.0V	6.0V	6.0V	6.0V	6.0V	6.0V	GND	6.0V	6.0V						6.0V	$\overline{CLR}$		-0.05		-0.1			µA
		56	6.0V	GND	6.0V	"	"	"	"	"	"	"						"	CLK		"		"			"
		57	"	6.0V	GND	"	"	"	"	"	"	"						"	A		"		"			"
		58	"	"	6.0V	GND	"	"	"	"	"	"						"	B		"		"			"
		59	"	"	"	6.0V	GND	"	"	"	"	"						"	C		"		"			"
		60	"	"	"	"	6.0V	GND	"	"	"	"						"	D		"		"			"
		61	"	"	"	"	"	6.0V	GND	"	"	"						"	ENABLE P		"		"			"
		62	"	"	"	"	"	"	6.0V	"	GND	"						"	$\overline{LOAD}$		"		"			"
		63	"	"	"	"	"	"	6.0V	"	6.0V	GND	7/	7/	7/	7/		"	ENABLE T		"		"			"
																				Subgroup 4 T_C = +25°C Min	Max					
C_C	3012	64		8/						GND								GND	$\overline{CLK}$		15					pF
		65	8/							"								"	$\overline{CLR}$		"					"
		66								"	8/							"	$\overline{LOAD}$		"					"
		67								"		8/						"	ENABLE T		"					"
		68							8/	"								"	ENABLE P		"					"
C_{IN}	3012	69			8/					"								"	A		10					"
		70				8/				"								"	B		"					"
		71					8/			"								"	C		"					"
		72						8/		"								"	D		"					"
																			Measured terminal 9/	Subgroup 7 T_C = +25°C Min	Max	Subgroup 8 T_C = +125°C Min	Max	Subgroup 8 T_C = -55°C Min	Max	
Truth table tests 10/ 11/	3014	73	B	B	B	B	B	B	A	GND	B	A	X	X	X	X	X	4.5V	All outputs 12/ 13/							
		74	B	A	"	"	"	"	"	"	"	"	L	L	L	L	L	"									
		75	A	B	"	"	"	"	"	"	"	"	"	"	"	"	"	"									
		76	A	A	"	"	"	"	"	"	"	"	"	"	"	"	"	"									
		77	B	A	A	A	A	A	"	"	A	"	"	"	"	"	"	"									
		78	B	B	"	"	"	"	"	"	"	"	"	"	"	"	"	"									
		79	B	A	"	"	"	"	"	"	"	"	"	"	"	"	"	"									
		80	A	A	B	B	B	B	"	"	"	B	"	"	"	"	"	"									
		81	"	B	A	A	A	A	"	"	"	A	"	"	"	"	"	"									
		82	"	A	A	A	A	A	"	"	"	A	"	"	"	H	"	"									
		83	"	A	B	B	B	B	"	"	"	B	"	"	"	"	"	"									
		84	"	B	A	A	A	A	"	"	"	A	"	"	"	"	"	"									
		85	"	A	A	A	A	A	"	"	"	A	"	"	H	L	"	"									
		86	"	A	B	B	B	B	"	"	"	B	"	"	"	"	"	"									
		87	"	B	A	A	A	A	"	"	"	A	"	"	"	"	"	"									
		88	"	A	A	A	A	A	"	"	"	A	"	"	"	H	"	"									
		89	"	A	B	B	B	B	"	"	"	B	"	"	"	"	"	"									
		90	"	B	A	A	A	A	"	"	"	A	"	"	"	"	"	"									
		91	"	A	A	A	A	A	"	"	"	A	"	H	L	L	"	"									
		92	"	A	B	B	B	B	"	"	"	B	"	"	"	"	"	"									
		93	"	B	A	A	A	A	"	"	"	A	"	"	"	"	"	"									
		94	"	A	A	A	A	A	"	"	"	A	"	"	"	H	"	"									
		95	"	A	B	B	B	B	"	"	"	B	"	"	"	"	"	"									
		96	"	B	A	A	A	A	"	"	"	A	"	"	"	"	"	"									
		97	"	A	A	A	A	A	"	"	"	A	"	"	H	L	"	"									
		98	"	A	B	B	B	B	"	"	"	B	"	"	"	"	"	"									
		99	"	B	A	A	A	A	"	"	"	A	"	"	"	"	"	"									
		100	"	A	A	A	A	A	"	"	"	A	"	"	"	"	H	"									
		101	"	A	B	B	B	B	"	"	"	B	"	"	"	"	"	"									
		102	"	B	A	A	A	A	"	"	"	A	"	"	"	H	L	"									
		103	"	A	A	A	A	A	"	"	"	A	H	L	L	L	"	"									
		104	"	A	B	B	B	B	"	"	"	B	"	"	"	"	"	"									
		105	"	B	A	A	A	A	"	"	"	A	"	"	"	"	"	"									
		107	"	A	A	A	A	A	"	"	"	A	"	"	"	H	"	"									

See footnotes at end of table III.

TABLE III. Group A inspection for device type 04 – Continued.

Symbol	MIL-STD-883 method	Case E,F,X	Terminal conditions 1/																Measured terminal	Test limits						Unit
			1	2	3	4	5	6	7	8	9	10	11	12	13	14	15	16		Subgroup 7 T_C = +25°C		Subgroup 8 T_C = +125°C		Subgroup 8 T_C = -55°C		
		2	2	3	4	5	7	8	9	10	12	13	14	15	17	18	19	20								
		Test no.	$\overline{CLR}$	CLK	A	B	C	D	ENABLE P	GND	$\overline{LOAD}$	ENABLE T	QD	QC	QB	QA	RCO	V_{CC}		Min	Max	Min	Max	Min	Max	
Truth table tests 10/ 11/	3014	108	A	A	B	B	B	B	A	GND	A	B	H	L	L	H	L	4.5V	All outputs 12/ 13/							
		109	“	B	A	A	A	A	“	“	“	A	“	“	“	“	“	“								
		110	“	A	A	A	A	A	“	“	“	A	“	“	H	L	“	“								
		111	“	A	B	B	B	B	“	“	“	B	“	“	“	“	“	“								
		112	“	B	A	A	A	A	“	“	“	A	“	“	“	“	“	“								
		113	“	A	A	A	A	A	“	“	“	A	“	“	“	H	“	“								
		114	“	A	B	B	B	B	“	“	“	B	“	“	“	“	“	“								
		115	“	B	A	A	A	A	“	“	“	A	“	“	“	“	“	“								
		116	“	A	A	A	A	A	“	“	“	A	“	H	L	L	“	“								
		117	“	A	B	B	B	B	“	“	“	B	“	“	“	“	“	“								
		118	“	B	A	A	A	A	“	“	“	A	“	“	“	“	“	“								
		119	“	A	A	A	A	A	“	“	“	A	“	“	“	H	“	“								
		120	“	A	B	B	B	B	“	“	“	B	“	“	“	“	“	“								
		121	“	B	A	A	A	A	“	“	“	A	“	“	“	“	“	“								
		122	“	A	A	A	A	A	“	“	“	A	“	“	H	L	“	“								
		123	“	A	B	B	B	B	“	“	“	B	“	“	“	“	“	“								
		124	“	B	A	A	A	A	“	“	“	A	“	“	“	“	“	“								
		125	“	A	A	A	A	A	“	“	“	A	“	“	“	H	H	“								
		126	“	A	B	B	B	B	“	“	“	B	“	“	“	“	L	“								
		127	“	B	A	A	A	A	“	“	“	A	“	“	“	“	H	“								
		128	“	A	“	“	“	“	“	“	“	A	L	L	L	L	L	“								
		129	“	B	“	“	“	“	B	“	“	B	“	“	“	“	“	“								
		130	“	A	“	“	“	“	“	“	“	“	“	“	“	“	“	“								
		131	“	B	“	“	“	“	A	“	“	“	“	“	“	“	“	“								
		132	“	A	“	B	B	B	“	“	“	“	“	“	“	“	“	“								
		133	“	B	“	“	“	“	“	“	“	“	“	“	“	“	“	“								
		134	“	A	“	“	“	“	“	“	B	“	“	“	“	H	“	“								
		135	“	A	“	A	A	“	“	“	“	“	“	“	“	“	“	“								
		136	“	B	“	“	“	“	“	“	“	“	“	“	“	“	“	“								
		137	“	A	“	“	“	“	“	“	“	“	“	H	H	“	“	“								
		138	“	A	“	“	“	“	“	“	“	“	“	“	“	“	“	“								
		139	“	B	“	“	“	“	“	“	A	“	“	“	“	“	“	“								
		140	“	A	“	B	B	A	“	“	“	“	“	“	“	“	“	“								
		141	“	B	“	“	“	“	“	“	“	“	“	“	“	“	“	“								
		142	“	A	“	“	“	“	“	“	“	“	H	L	L	“	“	“								
		143	“	A	“	A	A	“	“	“	“	“	“	“	“	“	“	“								
		144	“	B	“	“	“	“	“	“	“	“	“	“	“	“	“	“								
		145	“	A	“	“	“	“	“	“	“	“	“	H	H	“	H	“								
		146	“	A	B	“	“	“	“	“	“	“	“	“	“	“	“	“								
		147	“	B	A	“	“	“	“	“	“	“	“	“	“	“	“	“								
		148	“	B	A	B	B	B	“	“	“	“	“	“	“	“	“	“								
		149	“	A	A	“	“	“	“	“	“	“	L	L	L	“	L	“								
		150	“	“	B	“	“	“	“	“	“	“	“	“	“	“	“	“								
		151	“	“	A	“	A	A	“	“	“	“	“	“	“	“	“	“								
		152	“	“	B	“	“	A	“	“	“	“	“	“	“	“	“	“								
		153	“	“	A	“	“	B	“	“	“	“	“	“	“	“	“	“								
		154	“	“	B	“	“	“	“	“	“	“	“	“	“	“	“	“								
		155	“	“	B	A	B	“	“	“	“	“	“	“	“	“	“	“								
		156	“	“	A	“	“	“	“	“	“	“	“	“	“	“	“	“								
		157	“	B	“	“	“	“	“	“	“	“	“	“	“	“	“	“								
		158	“	A	“	“	“	“	“	“	“	“	“	“	H	“	“	“								
		159	“	A	B	B	A	“	“	“	“	“	“	“	“	“	“	“								
		160	“	B	“	“	“	“	“	“	“	“	“	“	“	“	“	“								
		161	“	A	“	“	“	“	“	“	“	“	“	H	L	L	“	“								
		162	“	A	A	“	“	“	“	“	“	“	“	“	“	“	“	“								
		163	“	B	“	“	“	“	“	“	“	“	“	“	“	“	“	“								
		164	“	A	“	“	“	“	“	“	“	“	“	“	“	H	“	“								
		165	“	A	B	A	“	“	“	“	“	“	“	“	“	“	“	“								
		166	“	B	“	“	“	“	“	“	“	“	“	“	“	“	“	“								
		167	“	A	“	“	“	“	“	“	“	“	“	“	H	L	“	“								
		168	“	A	“	B	B	A	“	“	“	“	“	“	“	“	“	“								
		169	“	B	“	“	“	“	“	“	“	“	“	“	“	“	“	“								
		170	“	A	“	“	“	“	“	“	“	“	H	L	L	“	“	“								

See footnotes at end of table III.

TABLE III. Group A inspection for device type 04 – Continued.

Symbol	MIL-STD-883 method	Case E,F,X	Terminal conditions 1/																Measured terminal	Test limits						Unit
			1	2	3	4	5	6	7	8	9	10	11	12	13	14	15	16		Subgroup 7 T_C = +25°C		Subgroup 8 T_C = +125°C		Subgroup 8 T_C = -55°C		
		2	2	3	4	5	7	8	9	10	12	13	14	15	17	18	19	20								
		Test no.	$\overline{CLR}$	CLK	A	B	C	D	ENABLE P	GND	$\overline{LOAD}$	ENABLE T	QD	QC	QB	QA	RCO	V_{CC}		Min	Max	Min	Max	Min	Max	
Truth table tests 10/ 11/	3014	171	A	A	B	A	B	A	A	GND	A	A	H	L	L	L	L	4.5V	All outputs 12/ 13/							
		172	"	B	"	"	"	"	"	"	"	"	"	"	"	"	"	"								
		173	"	A	"	"	"	"	"	"	"	"	"	"	H	"	"	"								
		174	"	A	A	"	"	"	"	"	"	"	"	"	"	"	"	"								
		175	"	B	"	"	"	"	"	"	"	"	"	"	"	"	"	"								
		176	"	A	"	"	"	"	"	"	"	"	"	"	"	H	"	"								
		177	"	A	B	B	A	"	"	"	"	"	"	"	"	"	"	"								
		178	"	B	"	"	"	"	"	"	"	"	"	"	"	"	"	"								
		179	"	A	"	"	"	"	"	"	"	"	"	H	L	L	"	"								
		180	"	A	A	"	"	"	"	"	"	"	"	"	"	"	"	"								
		181	"	B	"	"	"	"	"	"	"	"	"	"	"	"	"	"								
		182	"	A	"	"	"	"	"	"	"	"	"	"	"	H	"	"								
		183	"	A	"	"	"	"	"	"	"	"	"	"	"	"	"	"								
		184	"	B	"	"	"	"	"	"	"	"	"	"	"	"	"	"								
		185	"	A	"	"	"	"	"	"	"	"	"	"	H	L	"	"								
																				Subgroup 9 T_C = +25°C 14/		Subgroup 10 T_C = +125°C		Subgroup 11 T_C = -55°C 14/		
																				Min	Max	Min	Max	Min	Max	
f_{MAX} 15/	3003 Fig. 4	186	4.5V	IN					4.5V	GND	4.5V	4.5V				OUT		4.5V	QA	28		21		28		MHz
t_{PLH1}	3003 Fig. 4	187	4.5V	"					"	"	"	"				OUT		"	CLK to QA	8	36	8	48	8	36	ns
		188	"	"					"	"	"	"			OUT			"	CLK to QB	"	"	"	"	"	"	"
		189	"	"					"	"	"	"		OUT				"	CLK to QC	"	"	"	"	"	"	"
		190	"	"					"	"	"	"	OUT					"	CLK to QD	"	"	"	"	"	"	"
t_{PHL1}	3003 Fig. 4	191	4.5V	"					"	"	"	"				OUT		"	CLK to QA	"	"	"	"	"	"	"
		192	"	"					"	"	"	"			OUT			"	CLK to QB	"	"	"	"	"	"	"
		193	"	"					"	"	"	"		OUT				"	CLK to QC	"	"	"	"	"	"	"
		194	"	"					"	"	"	"	OUT					"	CLK to QD	"	"	"	"	"	"	"
t_{PLH2}	3003 Fig. 4	195	"	"					"	"	"	"					OUT	"	CLK to RCO	"	38	"	50	"	38	"
t_{PHL2}	3003 Fig. 4	196	"	"					"	"	"	"					"	"	CLK to RCO	"	38	"	50	"	38	"
t_{PLH4}	3003 Fig. 4	197	"	7/					"	"	"	IN					"	"	ENABLE T to RCO	7	34	7	46	7	34	"
t_{PHL4}	3003 Fig. 4	198	"	7/					"	"	"	IN					"	"	ENABLE T to RCO	7	34	7	46	7	34	"
t_{TLH}	3004 Fig. 4	199	4.5V	18/	GND	GND	GND	GND	"	"	19/	4.5V				OUT		"	QA	3	15	3	20	3	15	"
		200	"	"	4.5V	GND	"	"	"	"	"	"			OUT			"	QB	"	"	"	"	"	"	"
		201	"	"	"	4.5V	"	"	"	"	"	"		OUT				"	QC	"	"	"	"	"	"	"
		202	"	"	"	"	4.5V	"	"	"	"	"	OUT					"	QD	"	"	"	"	"	"	"
		203	"	"	GND	"	4.5V	4.5V	"	"	"	"					OUT	"	RCO	"	"	"	"	"	"	"
t_{THL}	3004 Fig. 4	204	"	"	4.5V	GND	GND	GND	"	"	"	"				OUT		"	QA	"	"	"	"	"	"	"
		205	"	"	"	4.5V	GND	"	"	"	"	"			OUT			"	QB	"	"	"	"	"	"	"
		206	"	"	"	4.5V	4.5V	"	"	"	"	"		OUT				"	QC	"	"	"	"	"	"	"
		207	"	"	"	GND	GND	4.5V	"	"	"	"	OUT					"	QD	"	"	"	"	"	"	"
		208	"	"	"	4.5V	4.5V	4.5V	"	"	"	"					OUT	"	RCO	"	"	"	"	"	"	"

See footnotes at end of table III.

TABLE III. Group A inspection for device type 05.

Symbol	MIL-STD-883 method	Case E,F,X	Terminal conditions 1/																Measured terminal	Test limits						Unit
			1	2	3	4	5	6	7	8	9	10	11	12	13	14	15	16		Subgroup 1 T_C = +25°C		Subgroup 2 T_C = +125°C		Subgroup 3 T_C = -55°C		
		2	2	3	4	5	7	8	9	10	12	13	14	15	17	18	19	20								
		Test no.	DATA B	QB	QA	ENABLE G	U/D	QC	QD	GND	DATA D	DATA C	LOAD	Max/Min	RCO	CLK	DATA A	V_{CC}		Min	Max	Min	Max	Min	Max	
$V_{IC\ (pos)}$ 1/		1	1mA							1/								GND	DATA B		1.5					V
		2				1mA				"								"	ENABLE G		"					"
		3					1mA			"								"	U/D		"					"
		4								"	1mA							"	DATA D		"					"
		5								"		1mA						"	DATA C		"					"
		6								"			1mA					"	LOAD		"					"
		7								"						1mA		"	CLK		"					"
		8								"							1mA	"	DATA A		"					"
$V_{IC\ (neg)}$		9	-1mA							GND								1/	DATA B		-1.5					"
		10				-1mA				"								"	ENABLE G		"					"
		11					-1mA			"								"	U/D		"					"
		12								"	-1mA							"	DATA D		"					"
		13								"		-1mA						"	DATA C		"					"
		14								"			-1mA					"	LOAD		"					"
		15								"						-1mA		"	CLK		"					"
		16								"							-1mA	"	DATA A		"					"
I_{CCH}	3005	17	6.0V			GND	6.0V			"	6.0V	6.0V	GND			6.0V	6.0V	6.0V	V_{CC}		0.2		20			µA
I_{CCL}	3005	18	GND			GND	GND			"	GND	GND	GND			GND	GND	"	V_{CC}		0.2		20			µA
V_{OH3}	3006 2/	19	4.2V	-20µA						"			1.2V			IN		"	QB	5.95		5.95		5.95		V
		20			-20µA					"			"			"	4.2V	"	QA	"		"		"		"
		21						-20µA		"		4.2V	"			"		"	QC	"		"		"		"
		22							-20µA	"	4.2V		"			"		"	QD	"		"		"		"
		23	1.2V				4.2V			"	1.2V	1.2V	"	-20µA		"	1.2V	"	Max/Min	"		"		"		"
		24				4.2V				"			"		-20µA	"		"	RCO	"		"		"		"
V_{OH5}	3006 2/	25	4.2V	-5.2mA						"			"			"		"	QB	5.48		5.2		5.48		"
		26			-5.2mA					"			"			"	4.2V	"	QA	"		"		"		"
		27						-5.2mA		"		4.2V	"			"		"	QC	"		"		"		"
		28							-5.2mA	"	4.2V		"			"		"	QD	"		"		"		"
		29	1.2V				4.2V			"	1.2V	1.2V	"	-5.2mA		"	1.2V	"	Max/Min	"		"		"		"
		30				4.2V				"			"		-5.2mA	"		"	RCO	"		"		"		"
V_{OL3}	3007 4/	31	1.2V	20µA						"			1.2V			"		"	QB		0.05		0.05		0.05	"
		32			20µA					"			"			"	1.2V	"	QA		"		"		"	"
		33						20µA		"		1.2V	"			"		"	QC		"		"		"	"
		34							20µA	"	1.2V		"			"		"	QD		"		"		"	"
		35	4.2V				4.2V			"	1.2V	1.2V	"	20µA		"	1.2V	"	Max/Min		"		"		"	"
		36	4.2V			1.2V	1.2V			"	4.2V	4.2V	"		20µA	"		"	RCO		"		"		"	"
V_{OL5}	3007 4/	37	1.2mA	5.2mA						"			"			"		"	QB		0.26		0.4		0.26	"
		38			5.2mA					"			"			"	1.2V	"	QA		"		"		"	"
		39						5.2mA		"		1.2V	"			"		"	QC		"		"		"	"
		40							5.2mA	"	1.2V		"			"		"	QD		"		"		"	"
		41	4.2V				4.2V			"	1.2V	1.2V	"	5.2mA		"	1.2V	"	Max/Min		"		"		"	"
		42	4.2V			1.2V	1.2V			"	4.2V	4.2V	"		5.2mA	4.2V		"	RCO		"		"		"	"
I_{OS4}	3011 5/	43	4.0V	GND						"			GND			IN		4.0V	QB	-10	-120	-10	-120	-10	-120	mA
		44			GND					"			"			"	4.0V	"	QA	"	"	"	"	"	"	"
		45						GND		"		4.0V	"			"		"	QC	"	"	"	"	"	"	"
		46							GND	"	4.0V		"			"		"	QD	"	"	"	"	"	"	"
		47	GND				4.0V			"	GND	GND	"	GND		"	GND	"	Max/Min	"	"	"	"	"	"	"
		48				4.0V				"			"		GND	"		"	RCO	"	"	"	"	"	"	"
I_{IH}	3010	49	6.0V			GND	GND			GND	GND	GND	GND			GND	GND	6.0V	DATA B		0.05		0.1			µA
		50	GND			6.0V	GND			"	"	"	"			"	"	"	ENABLE G		"		"			"
		51	"			GND	6.0V			"		"	"			"	"	"	U/D		"		"			"
		52	"			"	GND			"	6.0V	"	"			"	"	"	DATA D		"		"			"
		53	"			"	"			"	GND	6.0V	"			"	"	"	DATA C		"		"			"
		54	"			"	"			"	"	GND	6.0V			"	"	"	LOAD		"		"			"
		55	"			"	"			"	"	"	GND			6.0V	"	"	CLK		"		"			"
		56	"			"	"			"	"	"	GND			GND	6.0V	"	DATA A		"		"			"

See footnotes at end of table III.

TABLE III. Group A inspection for device type 05 – Continued.

Symbol	MIL-STD-883 method	Case E,F,X	Terminal conditions 1/																Measured terminal	Test limits						Unit
			1	2	3	4	5	6	7	8	9	10	11	12	13	14	15	16		Subgroup 1 T_C = +25°C		Subgroup 2 T_C = +125°C		Subgroup 3 T_C = -55°C		
		2	2	3	4	5	7	8	9	10	12	13	14	15	17	18	19	20								
		Test no.	DATA B	QB	QA	$\overline{\text{ENABLE}}$ G	$\overline{\text{U}}$/D	QC	QD	GND	DATA D	DATA C	$\overline{\text{LOAD}}$	Max/Min	$\overline{\text{RCO}}$	CLK	DATA A	V_{CC}		Min	Max	Min	Max	Min	Max	
I_{IL}	3009	57	GND			6.0V	6.0V			GND	6.0V	6.0V	6.0V			6.0V	6.0V	6.0V	DATA B		-0.05		-0.1			µA
		58	6.0V			GND	6.0V			"	"	"	"			"	"	"	ENABLE G		"		"			"
		59	"			6.0V	GND			"	"	"	"			"	"	"	U/D		"		"			"
		60	"			"	6.0V			"	GND	"	"			"	"	"	DATA D		"		"			"
		61	"			"	"			"	6.0V	GND	"			"	"	"	DATA C		"		"			"
		62	"			"	"			"	"	6.0V	GND			"	"	"	$\overline{\text{LOAD}}$		"		"			"
		63	"			"	"			"	"	"	6.0V			GND	"	"	CLK		"		"			"
		64	"			"	"			"	"	"	6.0V			6.0V	GND	"	DATA A		"		"			"
																				Subgroup 4 T_C = +25°C						
																				Min	Max					
C_{IN}	3012	65	4/							GND								GND	DATA B		10					pF
		66								"	4/							"	DATA D		"					"
		67								"		4/						"	DATA C		"					"
		68								"							4/	"	DATA A		"					"
C_C	3012	69								"						4/		"	CLK		15					"
		70				4/				"								"	ENABLE G		"					"
		71					4/			"								"	U/D		"					"
		72								"			4/					"	$\overline{\text{LOAD}}$		"					"
																			Measured terminal 9/	Subgroup 7 T_C = +25°C		Subgroup 8 T_C = +125°C		Subgroup 8 T_C = -55°C		
																				Min	Max	Min	Max	Min	Max	
Truth table tests 10/ 11/	3014	73	A	H	H	B	B	H	H	GND	A	A	B	H	H	A	A	4.5V	All outputs 12/ 13/							
		74	"	"	"	A	"	"	"	"	"	"	B	"	"	"	"	"									
		75	"	"	"	"	"	"	"	"	"	"	A	"	"	"	"	"									
		76	B	"	"	"	"	"	"	"	B	B	"	"	"	B	B	"									
		77	"	"	"	"	"	"	"	"	"	"	"	"	"	A	"	"									
		78	"	"	"	B	"	"	"	"	"	"	"	"	"	A	"	"									
		79	A	"	"	"	"	"	"	"	A	A	"	"	L	B	A	"									
		80	"	L	L	"	"	L	L	"	"	"	"	"	H	A	"	"									
		81	"	"	L	"	"	"	"	"	"	"	"	"	"	B	B	"									
		82	"	"	H	"	"	"	"	"	"	"	"	"	"	A	A	"									
		83	"	"	H	"	"	"	"	"	"	"	"	"	"	B	"	"									
		84	B	H	L	"	"	"	"	"	B	B	"	"	"	A	"	"									
		85	A	"	L	"	"	"	"	"	A	A	"	"	"	B	A	"									
		86	"	"	H	"	"	"	"	"	"	A	"	"	"	A	A	"									
		87	"	"	H	"	"	"	"	"	"	B	"	"	"	B	B	"									
		88	"	L	L	"	"	H	"	"	"	"	"	"	"	A	B	"									
		89	"	"	L	"	"	"	"	"	B	"	"	"	"	B	A	"									
		90	"	"	H	"	"	"	"	"	A	A	"	"	"	A	B	"									
		91	"	"	H	"	"	"	"	"	"	B	"	"	"	B	B	"									
		92	"	H	L	"	"	"	"	"	"	A	"	"	"	A	A	"									
		93	"	"	L	"	"	"	"	"	B	"	"	"	"	B	B	"									
		94	"	"	H	"	"	"	"	"	B	"	"	"	"	A	A	"									
		95	B	"	H	"	"	"	"	"	A	B	"	"	"	B	B	"									
		96	B	L	L	"	"	L	H	"	A	B	"	"	"	A	B	"									
		97	A	"	L	"	"	"	"	"	B	A	"	"	"	B	A	"									
		98	"	"	H	"	"	"	"	"	"	"	"	"	"	A	A	"									
		99	"	"	H	"	"	"	"	"	"	"	"	"	"	B	B	"									
		100	B	H	L	"	"	"	"	"	A	B	"	"	"	A	A	"									
		101	"	"	L	"	"	"	"	"	"	B	"	"	"	B	A	"									

See footnotes at end of table III.

TABLE III. Group A inspection for device type 05 – Continued.

Symbol	MIL-STD-883 method	Case E,F,X	Terminal conditions 1/																Measured terminal 9/	Test limits						Unit
			1	2	3	4	5	6	7	8	9	10	11	12	13	14	15	16		Subgroup 7 T_C = +25°C		Subgroup 8 T_C = +125°C		Subgroup 8 T_C = -55°C		
			2	3	4	5	7	8	9	10	12	13	14	15	17	18	19	20								
		Test no.	DATA B	QB	QA	$\overline{\text{ENABLE G}}$	$\overline{\text{U}}$/D	QC	QD	GND	DATA D	DATA C	$\overline{\text{LOAD}}$	Max/Min	$\overline{\text{RCO}}$	CLK	DATA A	V_{CC}		Min	Max	Min	Max	Min	Max	
Truth table tests 10/ 11/	3014	102	B	H	H	B	B	L	H	GND	A	A	A	L	H	A	A	4.5V	All outputs 12/ 13/							
		103	“	“	H	“	“	“	“	“	“	A	“	“	“	B	B	“								
		104	“	L	L	“	“	H	“	“	“	B	“	“	“	A	“	“								
		105	“	“	L	“	“	“	“	“	B	B	“	“	“	B	“	“								
		106	A	“	H	“	“	“	“	“	A	A	“	“	“	A	A	“								
		107	B	“	H	“	“	“	“	“	B	B	“	“	“	B	B	“								
		108	A	H	L	B	B	H	H	“	A	A	A	L	H	A	A	“								
		109	B	“	L	“	“	“	“	“	B	B	“	“	“	B	“	“								
		110	A	“	H	“	“	“	“	“	A	A	“	H	“	A	“	“								
		111	B	“	H	“	“	“	“	“	B	B	“	H	L	B	B	“								
		112	A	L	L	“	“	L	L	“	A	A	“	L	H	A	A	“								
		113	B	“	“	“	A	“	“	“	B	B	“	H	“	“	B	“								
		114	A	“	“	A	“	“	“	“	A	A	“	“	“	“	A	“								
		115	B	“	“	“	“	“	“	“	B	B	“	“	“	B	B	“								
		116	A	“	“	“	“	“	“	“	B	A	“	“	“	A	“	“								
		117	B	“	“	B	“	“	“	“	A	B	“	“	“	A	“	“								
		118	A	“	“	“	“	“	“	“	“	B	“	“	L	B	“	“								
		119	A	H	H	“	“	H	H	“	“	A	“	L	H	A	A	“								
		120	B	“	H	“	“	“	“	“	B	B	“	“	“	B	B	“								
		121	B	“	L	“	“	“	“	“	B	B	“	“	“	A	B	“								
		122	A	“	L	“	“	“	“	“	A	A	“	“	“	B	A	“								
		123	A	L	H	B	A	“	“	“	B	A	“	“	“	A	B	“								
		124	B	“	H	“	“	“	“	“	A	A	“	“	“	B	B	“								
		125	A	“	L	“	“	“	“	“	B	B	“	“	“	A	A	“								
		126	A	“	L	“	“	“	“	“	B	B	“	“	“	B	A	“								
		127	A	H	H	“	“	L	“	“	A	A	“	“	“	A	B	“								
		128	B	“	H	“	“	“	“	“	A	B	“	“	“	B	A	“								
		129	B	“	L	“	“	“	“	“	B	A	“	“	“	A	“	“								
		130	A	“	L	“	“	“	“	“	A	B	“	“	“	B	“	“								
		131	“	L	H	“	“	“	“	“	B	A	“	“	“	A	B	“								
		132	“	“	H	“	“	“	“	“	B	A	“	“	“	B	B	“								
		133	B	“	L	“	“	“	“	“	A	B	“	“	“	A	A	“								
		134	“	“	L	“	“	“	“	“	B	B	“	“	“	B	A	“								
		135	“	H	H	“	“	H	L	“	B	B	“	“	“	A	B	“								
		136	A	“	H	“	“	“	“	“	A	A	“	“	“	B	A	“								
		137	B	“	L	“	“	“	“	“	B	B	“	“	“	A	B	“								
		138	A	“	L	“	“	“	“	“	A	A	“	“	“	B	B	“								
		139	B	L	H	“	“	“	“	“	B	B	“	“	“	A	A	“								
		140	A	“	H	“	“	“	“	“	A	A	“	“	“	B	B	“								
		141	“	“	L	“	“	“	“	“	B	B	“	“	“	A	A	“								
		142	“	“	L	“	“	“	“	“	“	B	“	“	“	B	“	“								
		143	B	H	H	“	“	L	“	“	“	A	“	“	“	A	“	“								
		144	“	“	H	“	“	“	“	“	A	A	“	“	“	B	“	“								
		145	“	“	L	“	“	“	“	“	B	B	“	“	“	A	“	“								
		146	A	“	L	“	“	“	“	“	B	“	“	“	“	B	B	“								
		147	“	L	H	“	“	“	“	“	A	“	“	“	“	A	A	“								
		148	“	“	H	“	“	“	“	“	A	A	“	“	“	B	A	“								
		149	B	“	L	“	“	“	“	“	B	B	“	H	“	A	B	“								
		150	A	“	L	“	“	“	“	“	A	A	“	H	L	B	A	“								
		151	B	H	H	“	“	H	H	“	B	B	“	L	H	A	B	“								
		152	A	“	“	“	“	“	“	“	A	A	B	L	H	A	A	“								
		153	“	“	“	“	B	“	“	“	“	“	“	H	L	B	“	“								
		154	“	“	“	“	“	“	“	“	“	“	“	“	H	A	“	“								
		155	“	“	“	A	“	“	“	“	“	“	“	“	“	B	“	“								
		156	B	L	L	“	“	L	L	“	B	B	“	L	“	“	B	“								
		157	B	L	H	“	“	H	L	“	B	A	“	“	“	“	A	“								
		158	A	H	L	“	“	L	H	“	A	B	“	“	“	“	B	“								
		159	B	L	H	“	A	H	L	“	B	A	“	“	“	“	A	“								
		160	A	H	L	B	“	L	H	“	A	B	“	“	“	“	B	“								
		161	B	L	H	“	“	H	L	“	B	A	“	“	“	“	A	“								
		162	A	H	L	“	“	L	H	“	A	B	“	“	“	A	B	“								
		163	A	“	“	“	“	“	“	“	A	B	A	“	“	“	B	“								
		164	B	“	“	“	“	“	“	“	B	A	“	“	“	“	A	“								

See footnotes at end of table III.

TABLE III. Group A inspection for device type 05 – Continued.

Symbol	MIL-STD-883 method	Case E,F,X	Terminal conditions 1/																Measured terminal 9/	Test limits						Unit
			1	2	3	4	5	6	7	8	9	10	11	12	13	14	15	16		Subgroup 7 T_C = +25°C		Subgroup 8 T_C = +125°C		Subgroup 8 T_C = -55°C		
		2	2	3	4	5	7	8	9	10	12	13	14	15	17	18	19	20								
		Test no.	DATA B	QB	QA	$\overline{\text{ENABLE}}$ G	$\overline{\text{U}}$/D	QC	QD	GND	DATA D	DATA C	$\overline{\text{LOAD}}$	Max/Min	$\overline{\text{RCO}}$	CLK	DATA A	V_{CC}		Min	Max	Min	Max	Min	Max	
Truth table tests 10/ 11/	3014	165	B	H	L	B	B	L	H	GND	B	A	A	L	H	A	A	4.5V	All outputs 12/ 13/							
		166	"	"	"	A	"	"	"	"	"	"	"	"	"	"	"	"								
		167	"	"	"	B	"	"	"	"	"	"	"	"	"	"	"	"								
		168	"	"	"	"	A	"	"	"	"	"	"	"	"	"	"	"								
		169	"	"	"	"	"	"	"	"	"	"	"	"	"	"	B	"								
		170	A	"	"	"	"	"	"	"	"	"	"	"	"	"	A	"								
		171	"	"	"	"	"	H	L	"	"	"	B	"	"	B	B	"								
		172	"	"	"	"	"	H	L	"	"	"	A	"	"	B	B	"								
																				Subgroup 9 T_C = +25°C 14/		Subgroup 10 T_C = +125°C		Subgroup 11 T_C = -55°C 14/		
																				Min	Max	Min	Max	Min	Max	
f_{MAX} 15/	3003 Fig. 4	173			OUT	GND	GND			GND			4.5V			IN		4.5V	CLK to QA	23		17		23		MHz
t_{PLH5}	3003 Fig. 4	174	4.5V	OUT	OUT			OUT	OUT	"	4.5V	4.5V	IN				4.5V	"	$\overline{\text{LOAD}}$ to QA	8	51	8	68	8	51	ns
		175								"			"					"	$\overline{\text{LOAD}}$ to QB	"	"	"	"	"	"	"
		176								"			"					"	$\overline{\text{LOAD}}$ to QC	"	"	"	"	"	"	"
		177								"			"					"	$\overline{\text{LOAD}}$ to QD	"	"	"	"	"	"	"
t_{PHL5}	3003 Fig. 4	178	GND	OUT	OUT			OUT	OUT	"	GND	GND	"				GND	"	$\overline{\text{LOAD}}$ to QA	"	"	"	"	"	"	"
		179								"			"					"	$\overline{\text{LOAD}}$ to QB	"	"	"	"	"	"	"
		180								"			"					"	$\overline{\text{LOAD}}$ to QC	"	"	"	"	"	"	"
		181								"			"					"	$\overline{\text{LOAD}}$ to QD	"	"	"	"	"	"	"
t_{PLH1}	3003 Fig. 4	182	GND	OUT	OUT	GND	GND	OUT	OUT	"	"	GND	19/			IN	GND	"	CLK to QA	7	39	7	52	7	39	"
		183	GND			"	"			"	"	"	"			"	4.5V	"	CLK to QB	"	"	"	"	"	"	"
		184	4.5V			"	"			"	"	"	"			"	"	"	CLK to QC	"	"	"	"	"	"	"
		185	4.5V			"	"			"	"	4.5V	"			"	"	"	CLK to QD	"	"	"	"	"	"	"
t_{PHL1}	3003 Fig. 4	186		OUT	OUT	"	"	OUT	OUT	"			4.5V			"	"	"	CLK to QA	"	"	"	"	"	"	"
		187				"	"			"			"			"		"	CLK to QB	"	"	"	"	"	"	"
		188				"	"			"			"			"		"	CLK to QC	"	"	"	"	"	"	"
		189				"	"			"			"			"		"	CLK to QD	"	"	"	"	"	"	"
t_{PHL6}	3003 Fig. 4	190	IN	OUT	OUT	"		OUT	OUT	"			"			"	IN	"	DATA A to QA	"	42	"	56	"	42	"
		191				"				"			"			"		"	DATA B to QB	"	"	"	"	"	"	"
		192				"				"		IN	"			"		"	DATA C to QC	"	"	"	"	"	"	"
		193				"				"	IN		"			"		"	DATA D to QD	"	"	"	"	"	"	"
t_{PLH3}	3003 Fig. 4	194				"	GND			"			"	OUT		"		"	CLK to Max/Min	8	45	8	60	8	45	"
t_{PHL3}	3003 Fig. 4	195				"	"			"			"	OUT		"		"	CLK to Max/Min	8	45	8	60	8	45	"
t_{PLH2}	3003 Fig. 4	196				"	"			"			"		OUT	"		"	CLK to $\overline{\text{RCO}}$	5	26	5	35	5	26	"
t_{PHL2}	3003 Fig. 4	197				"	"			"			"		"	"		"	CLK to $\overline{\text{RCO}}$	5	26	5	35	5	26	"
t_{PLH4}	3003 Fig. 4	198				IN	"			"			"		"			"	$\overline{\text{ENABLE}}$ G to $\overline{\text{RCO}}$	6	35	6	47	6	35	"
t_{PHL4}	3003 Fig. 4	199				IN	"			"			"		"			"	$\overline{\text{ENABLE}}$ G to $\overline{\text{RCO}}$	"	35	"	47	"	35	"
t_{PLH7}	3003 Fig. 4	200				GND	IN			"			"	OUT		IN		"	$\overline{\text{U}}$/D to Max/Min	"	33	"	44	"	33	"
t_{PHL7}	3003 Fig. 4	201				"	"			"			"	OUT		"		"	$\overline{\text{U}}$/D to Max/Min	"	33	"	44	"	33	"
t_{PLH8}	3003 Fig. 4	202				"	"			"			"		OUT	"		"	$\overline{\text{U}}$/D to $\overline{\text{RCO}}$	8	41	8	54	8	41	"
t_{PHL8}	3003 Fig. 4	203				"	"			"			"		OUT	"		"	$\overline{\text{U}}$/D to $\overline{\text{RCO}}$	8	41	8	54	8	41	"

See footnotes at end of table III.

TABLE III. Group A inspection for device type 05 – Continued.

Symbol	MIL-STD-883 method	Case	Terminal conditions 1/																Measured terminal	Test limits						Unit
		E,F,X	1	2	3	4	5	6	7	8	9	10	11	12	13	14	15	16		Subgroup 9 T_C = +25°C 14/		Subgroup 10 T_C = +125°C		Subgroup 11 T_C = -55°C 14/		
		2	2	3	4	5	7	8	9	10	12	13	14	15	17	18	19	20								
		Test no.	DATA B	QB	QA	$\overline{\text{ENABLE G}}$	$\overline{\text{U}}$/D	QC	QD	GND	DATA D	DATA C	$\overline{\text{LOAD}}$	Max/Min	$\overline{\text{RCO}}$	CLK	DATA A	V_{CC}		Min	Max	Min	Max	Min	Max	
t_{TLH}	3004 Fig. 4	204	4.5V	OUT		GND	GND			GND	GND	GND	20/				GND	4.5V	QB	3	15	3	20	3	15	ns
		205	"		OUT	"	"			"	"	GND	"				4.5V	"	QA	"	"	"	"	"	"	"
		206	"			"	"	OUT		"	"	4.5V	"				"	"	QC	"	"	"	"	"	"	"
		207	"			"	"		OUT	"	4.5V	"	"				"	"	QD	"	"	"	"	"	"	"
		208	"			"	"			"	"	"	21/	OUT		29/	GND	"	Max/Min	"	"	"	"	"	"	"
		209	"			"	"			"	"	"	19/		OUT	20/	4.5V	"	RCO	"	"	"	"	"	"	"
t_{THL}	3004 Fig. 4	210	GND	OUT		"	"			"	"	"	20/				4.5V	"	QB	"	"	"	"	"	"	"
		211	4.5V		OUT	"	"			"	"	"	"				GND	"	QA	"	"	"	"	"	"	"
		212	"			"	"	OUT		"	"	GND	"				4.5V	"	QC	"	"	"	"	"	"	"
		213	"			"	"		OUT	"	GND	4.5V	"				4.5V	"	QD	"	"	"	"	"	"	"
		214	"			"	"			"	4.5V	"	"	OUT		23/	GND	"	Max/Min	"	"	"	"	"	"	"
		215	"			"	"			"	4.5V	"	19/		OUT	21/	GND	"	RCO	"	"	"	"	"	"	"

See footnotes at end of table III.

TABLE III. Group A inspection for device type 06.

Symbol	MIL-STD-883 method	Case E,F,X	Terminal conditions 1/																Measured terminal	Test limits						Unit
																				Subgroup 1 T_C = +25°C		Subgroup 2 T_C = +125°C		Subgroup 3 T_C = -55°C		
		2	2	3	4	5	7	8	9	10	12	13	14	15	17	18	19	20								
		Test no.	DATA B	QB	QA	CLK count down	CLK count up	QC	QD	GND	DATA D	DATA C	$\overline{LOAD}$	$\overline{CARRY}$	$\overline{BORROW}$	CLR	DATA A	V_{CC}		Min	Max	Min	Max	Min	Max	
$V_{IC\ (pos)}$ 1/		1	1mA							1/								GND	DATA B		1.5					V
		2				1mA				"								"	CLK count down		"					"
		3					1mA			"								"	CLK count up		"					"
		4								"	1mA							"	DATA D		"					"
		5								"		1mA						"	DATA C		"					"
		6								"			1mA					"	LOAD		"					"
		7								"						1mA		"	CLR		"					"
		8								"							1mA	"	DATA A		"					"
$V_{IC\ (neg)}$		9	-1mA							GND								1/	DATA B		-1.5					"
		10				-1mA				"								"	CLK count down		"					"
		11					-1mA			"								"	CLK count up		"					"
		12								"	-1mA							"	DATA D		"					"
		13								"		-1mA						"	DATA C		"					"
		14								"			-1mA					"	LOAD		"					"
		15								"						-1mA		"	CLR		"					"
		16								"							-1mA	"	DATA A		"					"
I_{CCH}	3005	17	6.0V							"	6.0V	6.0V	GND			GND	6.0V	6.0V	V_{CC}		0.2		20			µA
I_{CCL}	3005	18	GND							"	GND	GND	GND			GND	6.0V	"	V_{CC}		0.2		20			µA
V_{OH3} 2/	3006	19	4.2V	-20µA						"			1.2V			1.2V		"	QB	5.95		5.95		5.95		V
		20			-20µA					"			"			"	4.2V	"	QA	"		"		"		"
		21						-20µA		"		4.2V	"			"		"	QC	"		"		"		"
		22							-20µA	"	4.2V		"			"		"	QD	"		"		"		"
		23				4.2V				"				-20µA		"		"	$\overline{CARRY}$	"		"		"		"
		24					4.2V			"					-20µA	"		"	$\overline{BORROW}$	"		"		"		"
V_{OH5} 2/	3006	25	4.2V	-5.2mA						"			1.2V			"		"	QB	5.48		5.2		5.48		"
		26			-5.2mA					"			"			"	4.2V	"	QA	"		"		"		"
		27						-5.2mA		"		4.2V	"			"		"	QC	"		"		"		"
		28							-5.2mA	"	4.2V		"			"		"	QD	"		"		"		"
		29				4.2V				"				-5.2mA		"		"	$\overline{CARRY}$	"		"		"		"
		30					4.2V			"					-5.2mA	"		"	$\overline{BORROW}$	"		"		"		"
V_{OL3} 4/	3007	31	1.2V	20µA						"			1.2V			1.2V		"	QB		0.05		0.05		0.05	"
		32			20µA					"			"			"	1.2V	"	QA		"		"		"	"
		33						20µA		"		1.2V	"			"		"	QC		"		"		"	"
		34							20µA	"	1.2V		"			"		"	QD		"		"		"	"
		35	1.2V				1.2V			"	4.2V	1.2V	"	20µA		"	4.2V	"	$\overline{CARRY}$		"		"		"	"
		36				1.2V				"					20µA	4.2V		"	$\overline{BORROW}$		"		"		"	"
V_{OL5} 4/	3007	37	1.2V	5.2mA						"			1.2V			1.2V		"	QB		0.26		0.4		0.26	"
		38			5.2mA					"			"			"	1.2V	"	QA		"		"		"	"
		39						5.2mA		"		1.2V	"			"		"	QC		"		"		"	"
		40							5.2mA	"	1.2V		"			"		"	QD		"		"		"	"
		41	1.2V				1.2V			"	4.2V	1.2V	"	5.2mA		"	4.2V	"	$\overline{CARRY}$		"		"		"	"
		42				1.2V				"					5.2mA	4.2V		"	$\overline{BORROW}$		"		"		"	"
I_{OS4} 5/	3011	43	4.0V	GND						"			GND			GND		4.0V	QB	-10	-120	-10	-120	-10	-120	mA
		44			GND					"			"			"	4.0V	"	QA	"	"	"	"	"	"	"
		45						GND		"		4.0V	"			"		"	QC	"	"	"	"	"	"	"
		46							GND	"	4.0V		"			"		"	QD	"	"	"	"	"	"	"
		47					4.0V			"				GND				"	$\overline{CARRY}$	"	"	"	"	"	"	"
		48				4.0V				"					GND			"	$\overline{BORROW}$	"	"	"	"	"	"	"
I_{IH}	3010	49	6.0V			GND	GND			GND	GND	GND	GND			GND	GND	6.0V	DATA B		0.05		0.1			µA
		50	GND			6.0V	GND			"	"	"	"			"	"	"	CLK count down		"		"			"
		51	"			GND	6.0V			"	"	"	"			"	"	"	CLK count up		"		"			"
		52	"			"	GND			"	6.0V	"	"			"	"	"	DATA D		"		"			"
		53	"			"	"			"	GND	6.0V	"			"	"	"	DATA C		"		"			"
		54	"			"	"			"	"	GND	6.0V			"	"	"	LOAD		"		"			"
		55	"			"	"			"	"	"	GND			6.0V	"	"	CLR		"		"			"
		56	"			"	"			"	"	"	GND			GND	6.0V	"	DATA A		"		"			"

See footnotes at end of table III.

TABLE III. Group A inspection for device type 06 – Continued.

Symbol	MIL-STD-883 method	Case E,F,X 2 Test no.	Terminal conditions 1/ 1 DATA B	2 QB	3 QA	4 CLK count down	5 CLK count up	6 QC	7 QD	8 GND	9 DATA D	10 DATA C	11 LOAD	12 CARRY	13 BORROW	14 CLR	15 DATA A	16 V_{CC}	Measured terminal	Test limits Subgroup 1 T_C = +25°C Min	Subgroup 1 Max	Subgroup 2 T_C = +125°C Min	Subgroup 2 Max	Subgroup 3 T_C = -55°C Min	Subgroup 3 Max	Unit
			2	3	4	5	7	8	9	10	12	13	14	15	17	18	19	20								
I_{IL}	3009	57	GND			6.0V	6.0V			GND	6.0V	6.0V	6.0V			6.0V	6.0V	6.0V	DATA B		-0.05		-0.1			µA
		58	6.0V			GND	6.0V			"	"	"	"			"	"	"	CLK count down		"		"			"
		59	"			6.0V	GND			"	"	"	"			"	"	"	CLK count up		"		"			"
		60	"			"	6.0V			"	GND	"	"			"	"	"	DATA D		"		"			"
		61	"			"	"			"	6.0V	GND	"			"	"	"	DATA C		"		"			"
		62	"			"	"			"	"	6.0V	GND			"	"	"	LOAD		"		"			"
		63	"			"	"			"	"	"	6.0V			GND	"	"	CLR		"		"			"
		64	"			"	"			"	"	"	6.0V			6.0V	GND	"	DATA A		"		"			"
																				Subgroup 4 T_C = +25°C Min	Max					
C_{IN}	3012	65	8/							GND								GND	DATA B		10					pF
		66								"	8/							"	DATA D		"					"
		67								"		8/						"	DATA C		"					"
		68								"							8/	"	DATA A		"					"
C_C	3012	69				8/				"								"	CLK count down		15					"
		70					8/			"								"	CLK count up		"					"
		71								"						8/		"	CLR		"					"
		72								"			8/					"	LOAD		"					"
																			Measured terminal 9/	Subgroup 7 T_C = +25°C Min	Max	Subgroup 8 T_C = +125°C Min	Max	Subgroup 8 T_C = -55°C Min	Max	
Truth table tests 10/ 11/	3014	73	A	L	L	A	A	L	L	GND	A	A	A	H	H	A	A	4.5V	All outputs 12/ 13/							
		74	"	"	"	"	A	"	"	"	"	"	"	"	"	B	"	"								
		75	"	"	"	"	B	"	"	"	"	"	"	"	"	"	"	"								
		76	"	"	H	"	A	"	"	"	"	"	"	"	"	"	"	"								
		77	"	"	H	"	B	"	"	"	"	"	"	"	"	"	"	"								
		78	"	H	L	"	A	"	"	"	"	"	"	"	"	"	"	"								
		79	"	"	L	"	B	"	"	"	"	"	"	"	"	"	"	"								
		80	"	"	H	"	A	"	"	"	"	"	"	"	"	"	"	"								
		81	"	"	H	"	B	"	"	"	"	"	"	"	"	"	"	"								
		82	"	L	L	"	A	H	"	"	"	"	"	"	"	"	"	"								
		83	"	"	L	"	B	"	"	"	"	"	"	"	"	"	"	"								
		84	"	"	H	"	A	"	"	"	"	"	"	"	"	"	"	"								
		85	"	"	H	"	B	"	"	"	"	"	"	"	"	"	"	"								
		86	"	H	L	"	A	"	"	"	"	"	"	"	"	"	"	"								
		87	"	"	L	"	B	"	"	"	"	"	"	"	"	"	"	"								
		88	"	"	H	"	A	"	"	"	"	"	"	"	"	"	"	"								
		89	"	"	H	"	B	"	"	"	"	"	"	"	"	"	"	"								
		90	"	L	L	"	A	L	H	"	"	"	"	"	"	"	"	"								
		91	"	"	L	"	B	"	"	"	"	"	"	"	"	"	"	"								
		92	"	"	H	"	A	"	"	"	"	"	"	"	"	"	"	"								
		93	"	"	H	"	B	"	"	"	"	"	"	L	"	"	"	"								
		94	"	"	L	"	A	"	L	"	"	"	"	H	"	"	"	"								
		95	"	"	L	B	"	"	L	"	"	"	"	"	L	"	"	"								
		96	"	"	H	A	"	"	H	"	"	"	"	"	H	"	"	"								
		97	"	"	H	B	"	"	"	"	"	"	"	"	"	"	"	"								
		98	"	"	L	A	"	"	"	"	"	"	"	"	"	"	"	"								
		99	"	"	L	B	"	"	"	"	"	"	"	"	"	"	"	"								
		100	"	H	H	A	"	H	L	"	"	"	"	"	"	"	"	"								
		101	"	"	H	B	"	"	"	"	"	"	"	"	"	"	"	"								
		102	"	"	L	A	"	"	"	"	"	"	"	"	"	"	"	"								
		103	"	"	L	B	"	"	"	"	"	"	"	"	"	"	"	"								
		104	"	L	H	A	"	"	"	"	"	"	"	"	"	"	"	"								
		105	"	"	H	B	"	"	"	"	"	"	"	"	"	"	"	"								
		106	"	"	L	A	"	"	"	"	"	"	"	"	"	"	"	"								

See footnotes at end of table III.

TABLE III. Group A inspection for device type 06 – Continued.

Symbol	MIL-STD-883 method	Case E,F,X	Terminal conditions 1/ 1	2	3	4	5	6	7	8	9	10	11	12	13	14	15	16	Measured terminal 9/	Test limits Subgroup 7 T_C = +25°C Min	Subgroup 7 Max	Subgroup 8 T_C = +125°C Min	Subgroup 8 Max	Subgroup 8 T_C = -55°C Min	Subgroup 8 Max	Unit
		2	2	3	4	5	7	8	9	10	12	13	14	15	17	18	19	20								
		Test no.	DATA B	QB	QA	CLK count down	CLK count up	QC	QD	GND	DATA D	DATA C	$\overline{LOAD}$	$\overline{CARRY}$	$\overline{BORROW}$	CLR	DATA A	V_{CC}								
Truth table tests 10/ 11/	3014	107	A	L	L	B	A	H	L	GND	A	A	A	H	H	B	A	4.5V	All outputs 12/ 13/							
		108	“	H	H	A	“	L	“	“	“	“	“	“	“	“	”	“								
		109	“	“	H	B	“	“	“	“	“	“	“	“	“	“	“	“								
		110	“	“	L	A	“	“	“	“	“	“	“	“	“	“	“	“								
		111	“	“	L	B	“	“	“	“	“	“	“	“	“	“	“	“								
		112	“	L	H	A	“	“	“	“	“	“	“	“	“	“	“	“								
		113	“	“	H	B	“	“	“	“	“	“	“	“	“	“	“	“								
		114	“	“	L	A	“	“	“	“	“	“	“	“	“	“	“	“								
		115	“	“	L	B	“	“	“	“	“	“	“	“	L	“	“	“								
		116	“	“	H	A	“	“	H	“	“	“	“	“	H	“	“	“								
		117	“	H	H	“	“	H	H	“	“	“	B	“	“	“	“	“								
		118	“	L	L	“	“	L	L	“	“	“	“	“	“	A	“	“								
		119	“	H	H	“	“	H	H	“	“	“	A	“	“	B	“	“								
		120	“	H	H	“	“	H	H	“	“	“	“	“	“	A	“	“								
		121	“	L	L	“	“	L	L	“	“	“	“	“	“	B	“	“								
		122	“	L	L	“	“	L	L	“	“	“	“	“	“	“	“	“								
		123	“	H	H	A	A	H	H	“	“	“	B	“	“	“	“	“								
		124	“	“	“	“	“	“	“	“	“	“	A	“	“	“	“	“								
		125	B	“	“	“	“	“	“	“	“	B	A	“	“	“	B	“								
		126	“	L	L	“	“	L	L	“	“	“	B	“	“	“	“	“								
		127	“	“	“	B	“	“	“	“	“	“	“	“	L	“	“	“								
		128	“	“	“	A	“	“	“	“	“	“	“	“	H	“	“	“								
		129	“	“	“	“	B	“	“	“	“	“	“	“	“	“	“	“								
		130	“	“	“	“	A	“	“	“	“	“	“	“	“	“	“	“								
		131	“	“	“	“	“	“	“	“	“	“	A	“	“	“	“	“								
		132	“	“	“	“	“	“	“	“	“	“	“	“	“	A	“	“								
		133	“	“	“	B	“	“	“	“	“	“	“	“	L	“	“	“								
		134	“	“	“	A	“	“	“	“	“	“	“	“	H	“	“	“								
		135	“	“	“	“	B	“	“	”	”	”	“	”	“	“	“	“								
		136	“	“	“	“	A																			
																			Measured terminal	Subgroup 9 T_C = +25°C 14/ Min	Subgroup 9 Max	Subgroup 10 T_C = +125°C Min	Subgroup 10 Max	Subgroup 11 T_C = -55°C 14/ Min	Subgroup 11 Max	
f_{MAX} 15/	3003 Fig. 4	137			OUT	4.5V	IN			GND			4.5V			GND		4.5V	CLK count up to QA	19		14		19		MHz
		138			OUT	IN	4.5V			“			4.5V			“		“	CLK count down to QA	19		14		19		MHz
t_{PLH5}	3003 Fig. 4	139	4.5V	OUT	OUT					“			IN			“		“	$\overline{LOAD}$ to QB	12	51	12	68	12	51	ns
		140								“			“			“	4.5V	“	$\overline{LOAD}$ to QA	“	“	“	“	“	“	“
		141						OUT		“		4.5V	“			“		“	$\overline{LOAD}$ to QC	“	“	“	“	“	“	“
		142							OUT	“	4.5V		“			“		“	LOAD to QD	“	“	“	“	“	“	“
t_{PHL5}	3003 Fig. 4	143	GND	OUT	OUT					“			“			“		“	$\overline{LOAD}$ to QB	“	“	“	“	“	“	“
		144								“			“			“	GND	“	$\overline{LOAD}$ to QA	“	“	“	“	“	“	“
		145						OUT		“		GND	“			“		“	$\overline{LOAD}$ to QC	“	“	“	“	“	“	“
		146							OUT	“	GND		“			“		“	LOAD to QD	“	“	“	“	“	“	“
t_{PLH1}	3003 Fig. 4	147		OUT		4.5V	IN			“			4.5V			“		“	CLK count up to QB	11	48	11	64	11	48	“
		148			OUT	“	“			“			“			“		“	CLK count up to QA	“	“	“	“	“	“	“
		149				“	“	OUT		“			“			“		“	CLK count up to QC	“	“	“	“	“	“	“
		150				“	“		OUT	“			“			“		“	CLK count up to QD	“	“	“	“	“	“	“
		151		OUT		IN	4.5V			“			“			“		“	CLK count down to QB	“	“	“	“	“	“	“
		152			OUT	“	“			“			“			“		“	CLK count down to QA	“	“	“	“	“	“	“
		153				“	“	OUT		“			“			“		“	CLK count down to QC	“	“	“	“	“	“	“
		154				“	“		OUT	“			“			“		“	CLK count down to QD	“	“	“	“	“	“	“

See footnotes at end of table III.

TABLE III. Group A inspection for device type 06 – Continued.

Symbol	MIL-STD-883 method	Case E,F,X	Terminal conditions 1/																Measured terminal	Test limits						Unit
			1	2	3	4	5	6	7	8	9	10	11	12	13	14	15	16		Subgroup 9 T_C = +25°C 14/		Subgroup 10 T_C = +125°C		Subgroup 11 T_C = -55°C 14/		
		2	2	3	4	5	7	8	9	10	12	13	14	15	17	18	19	20								
		Test no.	DATA B	QB	QA	CLK count down	CLK count up	QC	QD	GND	DATA D	DATA C	$\overline{LOAD}$	$\overline{CARRY}$	$\overline{BORROW}$	CLR	DATA A	V_{CC}		Min	Max	Min	Max	Min	Max	
t_{PHL1}	3003 Fig. 4	155		OUT		4.5V	IN			GND			4.5V			GND		4.5V	CLK count up to QB	11	48	11	64	11	48	ns
		156			OUT	"	"			"			"			"		"	CLK count up to QA	"	"	"	"	"	"	"
		157				"	"	OUT		"			"			"		"	CLK count up to QC	"	"	"	"	"	"	"
		158				"	"		OUT	"			"			"		"	CLK count up to QD	"	"	"	"	"	"	"
		159		OUT		IN	4.5V			"			"			"		"	CLK count down to QB	"	"	"	"	"	"	"
		160			OUT	"	"			"			"			"		"	CLK count down to QA	"	"	"	"	"	"	"
		161				"	"	OUT		"			"			"		"	CLK count down to QC	"	"	"	"	"	"	"
		162				"	"		OUT	"			"			"		"	CLK count down to QD	"	"	"	"	"	"	"
t_{PHL9}	3003 Fig. 4	163	4.5V	OUT						"			19/			IN		"	CLR to QB	"	47	"	62	"	47	"
		164			OUT					"			"			"	4.5V	"	CLR to QA	"	"	"	"	"	"	"
		165						OUT		"		4.5V	"			"		"	CLR to QC	"	"	"	"	"	"	"
		166							OUT	"	4.5V		"			"		"	CLR to QD	"	"	"	"	"	"	"
t_{PLH2}	3003 Fig. 4	167				4.5V	IN			"	4.5V		"	OUT		GND	4.5V	"	CLK count up to $\overline{carry}$	4	29	4	39	4	29	"
		168	GND			IN	4.5V			"	GND	GND	"		OUT	"	GND	"	CLK count down to $\overline{borrow}$	"	"	"	"	"	"	"
t_{PHL2}	3003 Fig. 4	169				4.5V	IN			"	4.5V		"	OUT		"	4.5V	"	CLK count up to $\overline{carry}$	"	"	"	"	"	"	"
		170	GND			IN	4.5V			"	GND	GND	"		OUT	"	GND	"	CLK count down to $\overline{borrow}$	"	"	"	"	"	"	"
t_{TLH}	3004 Fig. 4	171	4.5V	OUT						GND			20/			GND		4.5V	QB	3	15	3	20	3	15	"
		172			OUT					"			"			"	4.5V	"	QA	"	"	"	"	"	"	"
		173						OUT		"		4.5V	"			"		"	QC	"	"	"	"	"	"	"
		174							OUT	"	4.5V		"			"		"	QD	"	"	"	"	"	"	"
		175	GND			4.5V	20/			"	4.5V	GND	19/	OUT		"	4.5V	"	$\overline{CARRY}$	"	"	"	"	"	"	"
		176	GND			20/	4.5V			"	GND	GND			OUT	"	GND	"	$\overline{BORROW}$	"	"	"	"	"	"	"
t_{THL}	3004 Fig. 4	177	4.5V	OUT						"			19/			21/		"	QB	"	"	"	"	"	"	"
		178			OUT					"			"			"	4.5V	"	QA	"	"	"	"	"	"	"
		179						OUT		"		4.5V	"			"		"	QC	"	"	"	"	"	"	"
		180							OUT	"	4.5V		"			"		"	QD	"	"	"	"	"	"	"
		181	GND			4.5V	20/			"	4.5V	GND	"	OUT		GND	4.5V	"	$\overline{CARRY}$	"	"	"	"	"	"	"
		182				20/	4.5V			"	GND	GND	"		OUT	GND	GND	"	$\overline{BORROW}$	"	"	"	"	"	"	"

See footnotes at end of table III.

TABLE III. Group A inspection for device type 07.

Symbol	MIL-STD-883 method	Case E,F,X 2	Terminal conditions 1/ 1	2	3	4	5	6	7	8	9	10	11	12	13	14	15	16	Measured terminal	Test limits Subgroup 1 T_C = +25°C Min	Subgroup 1 Max	Subgroup 2 T_C = +125°C Min	Subgroup 2 Max	Subgroup 3 T_C = -55°C Min	Subgroup 3 Max	Unit
		Test no.	2 DATA B	3 QB	4 QA	5 CLK count down	7 CLK count up	8 QC	9 QD	10 GND	12 DATA D	13 DATA C	14 $\overline{LOAD}$	15 $\overline{CARRY}$	17 $\overline{BORROW}$	18 CLR	19 DATA A	20 V_{CC}								
$V_{IC (pos)}$ 1/		1	1mA							1/								GND	DATA B		1.5					V
		2				1mA				"								"	CLK count down		"					"
		3					1mA			"								"	CLK count up		"					"
		4								"	1mA							"	DATA D		"					"
		5								"		1mA						"	DATA C		"					"
		6								"			1mA					"	LOAD		"					"
		7								"						1mA		"	CLR		"					"
		8								"							1mA	"	DATA A		"					"
$V_{IC (neg)}$		9	-1mA							GND								1/	DATA B		-1.5					"
		10				-1mA				"								"	CLK count down		"					"
		11					-1mA			"								"	CLK count up		"					"
		12								"	-1mA							"	DATA D		"					"
		13								"		-1mA						"	DATA C		"					"
		14								"			-1mA					"	LOAD		"					"
		15								"						-1mA		"	CLR		"					"
		16								"							-1mA	"	DATA A		"					"
I_{CCH}	3005	17	6.0V							"	6.0V	6.0V	GND			GND	6.0V	6.0V	V_{CC}		0.2		20			µA
I_{CCL}	3005	18	GND							"	GND	GND	GND			GND	GND	"	V_{CC}		0.2		20			µA
V_{OH3} 2/	3006	19	4.2V	-20µA						"			1.2V			1.2V		"	QB	5.95		5.95		5.95		V
		20			-20µA					"			"			"	4.2V	"	QA	"		"		"		"
		21						-20µA		"		4.2V	"			"		"	QC	"		"		"		"
		22							-20µA	"	4.2V		"			"		"	QO	"		"		"		"
		23				4.2V				"				-20µA		"		"	$\overline{CARRY}$	"		"		"		"
		24					4.2V			"					-20µA	"		"	$\overline{BORROW}$	"		"		"		"
V_{OH5} 2/	3006	25	4.2V	-5.2mA						"			1.2V			"		"	QB	5.48		5.2		5.48		"
		26			-5.2mA					"			"			"	4.2V	"	QA	"		"		"		"
		27						-5.2mA		"		4.2V	"			"		"	QC	"		"		"		"
		28							-5.2mA	"	4.2V		"			"		"	QO	"		"		"		"
		29				4.2V				"				-5.2mA		"		"	$\overline{CARRY}$	"		"		"		"
		30					4.2V			"					-5.2mA	"		"	$\overline{BORROW}$	"		"		"		"
V_{OL3} 4/	3007	31	1.2V	20µA						"			1.2V			1.2V		"	QB		0.05		0.05		0.05	"
		32			20µA					"			"			"	1.2V	"	QA		"		"		"	"
		33						20µA		"		1.2V	"			"		"	QC		"		"		"	"
		34							20µA	"	1.2V		"			"		"	QO		"		"		"	"
		35	1.2V				1.2V			"	4.2V	1.2V	"	20µA		"	4.2V	"	$\overline{CARRY}$		"		"		"	"
		36				1.2V				"					20µA	4.2V		"	$\overline{BORROW}$		"		"		"	"
V_{OL5} 4/	3007	37	1.2V	5.2mA						"			1.2V			1.2V		"	QB		0.26		0.4		0.26	"
		38			5.2mA					"			"			"	1.2V	"	QA		"		"		"	"
		39						5.2mA		"		1.2V	"			"		"	QC		"		"		"	"
		40							5.2mA	"	1.2V		"			"		"	QO		"		"		"	"
		41	1.2V				1.2V			"	4.2V	1.2V	"	5.2mA		"	4.2V	"	$\overline{CARRY}$		"		"		"	"
		42				1.2V				"					5.2mA	4.2V		"	$\overline{BORROW}$		"		"		"	"
I_{OS4} 5/	3011	43	4.0V	GND						"			GND			GND		4.0V	QB	-10	-120	-10	-120	-10	-120	mA
		44			GND					"			"			"	4.0V	"	QA	"	"	"	"	"	"	"
		45						GND		"		4.0V	"			"		"	QC	"	"	"	"	"	"	"
		46							GND	"	4.0V		"			"		"	QO	"	"	"	"	"	"	"
		47					4.0V			"				GND				"	$\overline{CARRY}$	"	"	"	"	"	"	"
		48				4.0V				"					GND			"	$\overline{BORROW}$	"	"	"	"	"	"	"
I_{IH}	3010	49	6.0V			GND	GND			GND	GND	GND	GND			GND	GND	6.0V	DATA B		0.05		0.1			µA
		50	GND			6.0V	GND			"	"	"	"			"	"	"	CLK count down		"		"			"
		51	"			GND	6.0V			"	"	"	"			"	"	"	CLK count up		"		"			"
		52	"			"	GND			"	6.0V	"	"			"	"	"	DATA D		"		"			"
		53	"			"	"			"	GND	6.0V	"			"	"	"	DATA C		"		"			"
		54	"			"	"			"	"	GND	6.0V			"	"	"	LOAD		"		"			"
		55	"			"	"			"	"	"	GND			6.0V	"	"	CLR		"		"			"
		56	"			"	"			"	"	"	GND			GND	6.0V	"	DATA A		"		"			"

See footnotes at end of table III.

TABLE III. Group A inspection for device type 07 – Continued.

Symbol	MIL-STD-883 method	Case E,F,X 2	Terminal conditions 1/ 1	2	3	4	5	6	7	8	9	10	11	12	13	14	15	16	Measured terminal	Test limits Subgroup 1 T_C = +25°C Min	Subgroup 1 Max	Subgroup 2 T_C = +125°C Min	Subgroup 2 Max	Subgroup 3 T_C = -55°C Min	Subgroup 3 Max	Unit
		Test no.	2 DATA B	3 QB	4 QA	5 CLK count down	7 CLK count up	8 QC	9 QD	10 GND	12 DATA D	13 DATA C	14 $\overline{LOAD}$	15 $\overline{CARRY}$	17 $\overline{BORROW}$	18 CLR	19 DATA A	20 V_{CC}								
I_{IL}	3009	57	GND			6.0V	6.0V			GND	6.0V	6.0V	6.0V			6.0V	6.0V	6.0V	DATA B		-0.05		-0.1			µA
		58	6.0V			GND	6.0V			"	"	"	"			"	"	"	CLK count down		"		"			"
		59	"			6.0V	GND			"	"	"	"			"	"	"	CLK count up		"		"			"
		60	"			"	6.0V			"	GND	"	"			"	"	"	DATA D		"		"			"
		61	"			"	"			"	6.0V	GND	"			"	"	"	DATA C		"		"			"
		62	"			"	"			"	"	6.0V	GND			"	"	"	$\overline{LOAD}$		"		"			"
		63	"			"	"			"	"	"	6.0V			GND	"	"	CLR		"		"			"
		64	"			"	"			"	"	"	6.0V			6.0V	GND	"	DATA A		"		"			"
																				Subgroup 4 T_C = +25°C Min	Max					
C_{IN}	3012	65	8/							GND								GND	DATA B		10					pF
		66								"	8/							"	DATA D		"					"
		67								"		8/						"	DATA C		"					"
		68								"							8/	"	DATA A		"					"
C_C	3012	69				8/				"								"	CLK count down		15					"
		70					8/			"								"	CLK count up		"					"
		71								"			8/					"	LOAD		"					"
		72								"						8/		"	CLR		"					"
																			Measured terminal 9/	Subgroup 7 T_C = +25°C Min	Max	Subgroup 8 T_C = +125°C Min	Max	Subgroup 8 T_C = -55°C Min	Max	
Truth table tests 10/ 11/	3014	73	B	L	L	A	A	L	L	GND	B	B	B	H	H	B	B	4.5V	All outputs 12/ 13/							
		74	"	"	L	"	"	"	"	"	"	"	A	"	"	"	B	"									
		75	"	"	H	"	"	"	"	"	"	"	B	"	"	"	A	"									
		76	"	"	H	"	"	"	"	"	"	"	A	"	"	"	A	"									
		77	A	H	L	"	"	"	"	"	"	"	B	"	"	"	B	"									
		78	"	"	L	"	"	"	"	"	"	"	A	"	"	"	B	"									
		79	"	"	H	"	"	"	"	"	"	"	B	"	"	"	A	"									
		80	"	"	H	"	"	"	"	"	"	"	A	"	"	"	A	"									
		81	B	L	L	"	"	H	"	"	"	A	B	"	"	"	B	"									
		82	"	"	L	"	"	"	"	"	"	"	A	"	"	"	B	"									
		83	"	"	H	"	"	"	"	"	"	"	B	"	"	"	A	"									
		84	"	"	H	"	"	"	"	"	"	"	A	"	"	"	A	"									
		85	A	H	L	"	"	"	"	"	"	"	B	"	"	"	B	"									
		86	"	"	L	"	"	"	"	"	"	"	A	"	"	"	B	"									
		87	"	"	H	"	"	"	"	"	"	"	B	"	"	"	A	"									
		88	"	"	H	"	"	"	"	"	"	"	A	"	"	"	A	"									
		89	B	L	L	"	"	L	H	"	A	B	B	"	"	"	B	"									
		90	"	"	L	"	"	"	"	"	"	"	A	"	"	"	B	"									
		91	"	"	H	"	"	"	"	"	"	"	B	"	"	"	A	"									
		92	"	"	H	"	"	"	"	"	"	"	A	"	"	"	A	"									
		93	A	H	L	"	"	"	"	"	"	"	B	"	"	"	B	"									
		94	"	"	L	"	"	"	"	"	"	"	A	"	"	"	B	"									
		95	"	"	H	"	"	"	"	"	"	"	B	"	"	"	A	"									
		96	"	"	H	"	"	"	"	"	"	"	A	"	"	"	A	"									
		97	B	L	L	"	"	H	H	"	"	A	B	"	"	"	B	"									
		98	"	"	L	"	"	"	"	"	"	"	A	"	"	"	B	"									
		99	"	"	H	"	"	"	"	"	"	"	B	"	"	"	A	"									
		100	"	"	H	"	"	"	"	"	"	"	A	"	"	"	A	"									
		101	A	H	L	"	"	"	"	"	"	"	B	"	"	"	B	"									
		102	"	H	L	"	"	"	"	"	"	"	B	"	"	"	B	"									
		103	"	"	H	"	"	"	"	"	"	"	A	"	"	"	A	"									
		104	"	L	L	"	"	L	L	"	"	"	B	"	"	A	"	"									
		105	"	"	"	"	"	"	"	"	"	"	A	"	"	A	"	"									
		106	"	"	"	"	"	"	"	"	"	"	"	"	"	B	"	"									

See footnotes at end of table III.

TABLE III. Group A inspection for device type 07 – Continued.

Symbol	MIL-STD-883 method	Case E,F,X	Terminal conditions 1/																Measured terminal 9/	Test limits						Unit
			1	2	3	4	5	6	7	8	9	10	11	12	13	14	15	16		Subgroup 7 T_C = +25°C		Subgroup 8 T_C = +125°C		Subgroup 8 T_C = -55°C		
		2	2	3	4	5	7	8	9	10	12	13	14	15	17	18	19	20								
		Test no.	DATA B	QB	QA	CLK count down	CLK count up	QC	QD	GND	DATA D	DATA C	$\overline{LOAD}$	$\overline{CARRY}$	$\overline{BORROW}$	CLR	DATA A	V_{CC}		Min	Max	Min	Max	Min	Max	
Truth table tests 10/ 11/	3014	107	A	L	L	B	A	L	L	GND	A	A	A	H	L	B	A	4.5V	All outputs 12/ 13/							
		108	“	H	H	A	“	H	H	“	“	“	“	“	H	“	“	“								
		109	“	“	H	B	“	“	“	“	“	“	“	“	“	“	“	“								
		110	“	“	L	A	“	“	“	“	“	“	“	“	“	“	“	“								
		111	“	“	L	B	“	“	“	“	“	“	“	“	“	“	“	“								
		112	“	L	H	A	“	“	“	“	“	“	“	“	“	“	“	“								
		113	“	“	H	B	“	“	“	“	“	“	“	“	“	“	“	“								
		114	“	“	L	A	“	“	“	“	“	“	“	“	“	“	“	“								
		115	“	“	L	B	“	“	“	“	“	“	“	“	“	“	“	“								
		116	“	H	H	A	“	L	“	“	“	“	“	“	“	“	“	“								
		117	“	“	H	B	“	“	“	“	“	“	“	“	“	“	“	“								
		118	“	“	L	A	“	“	“	“	“	“	“	“	“	“	“	“								
		119	“	“	L	B	“	“	“	“	“	“	“	“	“	“	“	“								
		120	“	L	H	A	“	“	“	“	“	“	“	“	“	“	“	“								
		121	“	“	H	B	“	“	“	“	“	“	“	“	“	“	“	“								
		122	“	“	L	A	“	“	“	“	“	“	“	“	“	“	“	“								
		123	“	“	L	B	“	“	“	“	“	“	“	“	“	“	“	“								
		124	“	H	H	A	“	H	L	“	“	“	“	“	“	“	“	“								
		125	“	“	H	B	“	“	“	“	“	“	“	“	“	“	“	“								
		126	“	“	L	A	“	“	“	“	“	“	“	“	“	“	“	“								
		127	“	“	L	B	“	“	“	“	“	“	“	“	“	“	“	“								
		128	“	L	H	A	“	“	“	“	“	“	“	“	“	“	“	“								
		129	“	“	H	B	“	“	“	“	“	“	“	“	“	“	“	“								
		130	“	“	L	A	“	“	“	“	“	“	“	“	“	“	“	“								
		131	“	“	L	B	“	“	“	“	“	“	“	“	“	“	“	“								
		132	“	H	H	A	“	L	“	“	“	“	“	“	“	“	“	“								
		133	“	“	H	B	“	“	“	“	“	“	“	“	“	“	“	“								
		134	“	“	L	A	“	“	“	“	“	“	“	“	“	“	“	“								
		135	“	“	L	B	“	“	“	“	“	“	“	“	“	“	“	“								
		136	“	L	H	A	“	“	“	“	“	“	“	“	“	“	“	“								
		137	“	“	H	B	“	“	“	“	“	“	“	“	“	“	“	“								
		138	“	“	L	A	“	“	“	“	“	“	“	“	“	“	“	“								
		139	“	“	L	“	B	“	“	“	“	“	“	“	“	“	“	“								
		140	“	“	H	“	A	“	“	“	“	“	“	“	“	“	“	“								
		141	“	“	H	“	B	“	“	“	“	“	“	“	“	“	“	“								
		142	“	H	L	“	A	“	“	“	“	“	“	“	“	“	“	“								
		143	“	“	L	“	B	“	“	“	“	“	“	“	“	“	“	“								
		144	“	“	H	“	A	“	“	“	“	“	“	“	“	“	“	“								
		145	“	“	H	“	B	“	“	“	“	“	“	“	“	“	“	“								
		146	“	L	L	“	A	H	“	“	“	“	“	“	“	“	“	“								
		147	“	“	L	“	B	“	“	“	“	“	“	“	“	“	“	“								
		148	“	“	H	“	A	“	“	“	“	“	“	“	“	“	“	“								
		149	“	“	H	“	B	“	“	“	“	“	“	“	“	“	“	“								
		150	“	H	L	“	A	“	“	“	“	“	“	“	“	“	“	“								
		151	“	“	L	“	B	“	“	“	“	“	“	“	“	“	“	“								
		152	“	“	H	“	A	“	“	“	“	“	“	“	“	“	“	“								
		153	“	“	H	“	B	“	“	“	“	“	“	“	“	“	“	“								
		154	“	L	L	“	A	L	H	“	“	“	“	“	“	“	“	“								
		155	“	“	L	“	B	“	“	“	“	“	“	“	“	“	“	“								
		156	“	“	H	“	A	“	“	“	“	“	“	“	“	“	“	“								
		157	“	“	H	“	B	“	“	“	“	“	“	“	“	“	“	“								
		158	“	H	L	“	A	“	“	“	“	“	“	“	“	“	“	“								
		159	“	“	L	“	B	“	“	“	“	“	“	“	“	“	“	“								
		160	“	“	H	“	A	“	“	“	“	“	“	“	“	“	“	“								
		161	“	“	H	“	B	“	“	“	“	“	“	“	“	“	“	“								
		162	“	L	L	“	A	H	“	“	“	“	“	“	“	“	“	“								
		163	“	“	L	“	B	“	“	“	“	“	“	“	“	“	“	“								
		164	“	“	H	“	A	“	“	“	“	“	“	“	“	“	“	“								
		165	“	“	H	“	B	“	“	“	“	“	“	“	“	“	“	“								
		166	“	H	L	“	A	“	“	“	“	“	“	“	“	“	“	“								
		167	“	“	L	“	B	“	“	“	“	“	“	“	“	“	“	“								
		168	“	“	H	“	A	“	“	“	“	“	“	“	“	“	“	“								
		169	“	“	H	“	B	“	“	“	“	“	“	“	L	“	“	“								

See footnotes at end of table III.

TABLE III. Group A inspection for device type 07 – Continued.

Symbol	MIL-STD-883 method	Case	Terminal conditions 1/																Measured terminal 9/	Test limits						Unit
		E,F,X	1	2	3	4	5	6	7	8	9	10	11	12	13	14	15	16		Subgroup 9 T_C = +25°C 14/		Subgroup 10 T_C = +125°C		Subgroup 11 T_C = -55°C 14/		
		2	2	3	4	5	7	8	9	10	12	13	14	15	17	18	19	20								
		Test no.	DATA B	QB	QA	CLK count down	CLK count up	QC	QD	GND	DATA D	DATA C	LOAD	CARRY	BORROW	CLR	DATA A	V_{CC}		Min	Max	Min	Max	Min	Max	
Truth table tests 10/ 11/	3014	170	A	L	L	A	A	L	L	GND	A	A	A	H	H	B	A	4.5V	All outputs 12/ 13/							
		171	"	"	"	"	A	"	"	"	"	"	"	"	"	A	"	"								
		172	"	"	"	"	B	"	"	"	"	"	"	"	"	"	"	"								
		173	"	"	"	"	A	"	"	"	"	"	"	"	"	"	"	"								
		174	"	"	"	B	"	"	"	"	"	"	"	"	L	"	"	"								
		175	"	"	"	A	"	"	"	"	"	"	"	"	H	"	"	"								
		176	"	"	"	"	"	"	"	"	"	"	"	"	"	B	"	"								
		177	"	H	H	"	"	H	H	"	"	"	B	"	"	"	"	"								
		178	"	"	"	"	B	"	"	"	"	"	"	L	"	"	"	"								
		179	"	"	"	"	A	"	"	"	"	"	"	H	"	"	"	"								
		180	"	"	"	B	A	"	"	"	"	"	"	"	"	"	"	"								
		181	"	"	"	A	A	"	"	"	"	"	"	"	"	"	"	"								
t_{PHL1}	3003 Fig. 4	182		OUT		4.5V	IN			GND			4.5V			GND		4.5V	CLK count up to QB	11	48	11	64	11	48	ns
		183			OUT	"	"			"			"			"		"	CLK count up to QA	"	"	"	"	"	"	"
		184				"	"	OUT		"			"			"		"	CLK count up to QC	"	"	"	"	"	"	"
		185				"	"		OUT	"			"			"		"	CLK count up to QD	"	"	"	"	"	"	"
		186		OUT		IN	4.5V			"			"			"		"	CLK count down to QB	"	"	"	"	"	"	"
		187			OUT	"	"			"			"			"		"	CLK count down to QA	"	"	"	"	"	"	"
		188				"	"	OUT		"			"			"		"	CLK count down to QC	"	"	"	"	"	"	"
		189				"	"		OUT	"			"			"		"	CLK count down to QD	"	"	"	"	"	"	"
t_{PHL9}	3003 Fig. 4	190	4.5V	OUT						"			19/			IN		"	CLR to QB	"	47	"	62	"	47	"
		191			OUT					"			"			"	4.5V	"	CLR to QA	"	"	"	"	"	"	"
		192						OUT		"		4.5V	"			"		"	CLR to QC	"	"	"	"	"	"	"
		193							OUT	"	4.5V		"			"		"	CLR to QD	"	"	"	"	"	"	"
t_{PLH2}	3003 Fig. 4	194	4.5V			4.5V	IN			"	4.5V	4.5V	"	OUT		GND	4.5V	"	CLK count up to CARRY	4	29	4	39	4	29	"
		195	GND			IN	4.5V			"	GND	GND	"		OUT	"	GND	"	CLK count down to BORROW	"	"	"	"	"	"	"
t_{PHL2}	3003 Fig. 4	196	4.5V			4.5V	IN			"	4.5V	4.5V	"	OUT		"	4.5V	"	CLK count up to CARRY	"	"	"	"	"	"	"
		197	GND			IN	4.5V			"	GND	GND	"		OUT	"	GND	"	CLK count down to BORROW	"	"	"	"	"	"	"
f_{MAX} 15/	3003 Fig. 4	198			OUT	4.5V	IN			GND			4.5V			GND		4.5V	CLK count up to QA	19		14		19		MHz
		199			OUT	IN	4.5V			"			4.5V			"		"	CLK count down to QA	19		14		19		MHz
t_{PLH5}	3003 Fig. 4	200	4.5V	OUT						"			IN			"		"	LOAD to QB	12	51	12	68	12	51	ns
		201			OUT					"			"			"	4.5V	"	LOAD to QA	"	"	"	"	"	"	"
		202						OUT		"		4.5V	"			"		"	LOAD to QC	"	"	"	"	"	"	"
		203							OUT	"	4.5V		"			"		"	LOAD to QD	"	"	"	"	"	"	"
t_{PHL5}	3003 Fig. 4	204	GND	OUT						"			"			"		"	LOAD to QB	"	"	"	"	"	"	"
		205			OUT					"			"			"	GND	"	LOAD to QA	"	"	"	"	"	"	"
		206						OUT		"		GND	"			"		"	LOAD to QC	"	"	"	"	"	"	"
		207							OUT	"	GND		"			"		"	LOAD to QD	"	"	"	"	"	"	"

See footnotes at end of table III.

TABLE III. Group A inspection for device type 07 – Continued.

Symbol	MIL-STD-883 method	Case E,F,X	Terminal conditions 1/ 1	2	3	4	5	6	7	8	9	10	11	12	13	14	15	16	Measured terminal	Test limits Subgroup 9 T_C = +25°C 14/		Subgroup 10 T_C = +125°C		Subgroup 11 T_C = -55°C 14/		Unit
		2	2	3	4	5	7	8	9	10	12	13	14	15	17	18	19	20								
		Test no.	DATA B	QB	QA	CLK count down	CLK count up	QC	QD	GND	DATA D	DATA C	$\overline{LOAD}$	$\overline{CARRY}$	$\overline{BORROW}$	CLR	DATA A	V_{CC}		Min	Max	Min	Max	Min	Max	
t_{PLH1}	3003 Fig. 4	208		OUT		4.5V	IN			GND			4.5V			GND		4.5V	CLK count up to QB	11	48	11	64	11	48	ns
		209			OUT	"	"			"			"			"		"	CLK count up to QA	"	"	"	"	"	"	"
		210				"	"	OUT		"			"			"		"	CLK count up to QC	"	"	"	"	"	"	"
		211				"	"		OUT	"			"			"		"	CLK count up to QD	"	"	"	"	"	"	"
		212		OUT		IN	4.5V			"			"			"		"	CLK count down to QB	"	"	"	"	"	"	"
		213			OUT	"	"			"			"			"		"	CLK count down to QA	"	"	"	"	"	"	"
		214				"	"	OUT		"			"			"		"	CLK count down to QC	"	"	"	"	"	"	"
		215				"	"		OUT	"			"			"		"	CLK count down to QD	"	"	"	"	"	"	"
t_{TLH}	3004 Fig. 4	216	4.5V	OUT						"			20/			"		"	QB	3	15	3	20	3	15	"
		217			OUT					"			"			"	4.5V	"	QA	"	"	"	"	"	"	"
		218						OUT		"		4.5V	"			"		"	QC	"	"	"	"	"	"	"
		219							OUT	"	4.5V		"			"		"	QD	"	"	"	"	"	"	"
		220	4.5V			4.5V	20/			"	4.5V	4.5V	19/	OUT		"	4.5V	"	$\overline{CARRY}$	"	"	"	"	"	"	"
		221	GND			20/	4.5V			"	GND	GND			OUT	"	GND	"	$\overline{BORROW}$	"	"	"	"	"	"	"
t_{THL}	3004 Fig. 4	222	4.5V	OUT						"			"			21/		"	QB	"	"	"	"	"	"	"
		223			OUT					"			"			"	4.5V	"	QA	"	"	"	"	"	"	"
		224						OUT		"		4.5V	"			"		"	QC	"	"	"	"	"	"	"
		225							OUT	"	4.5V		"			"		"	QD	"	"	"	"	"	"	"
		226	4.5V			4.5V	20/			"	4.5V	4.5V	"	OUT		GND	4.5V	"	$\overline{CARRY}$	"	"	"	"	"	"	"
		227	GND			20/	4.5V			"	GND	GND	"		OUT	GND	4.5V	"	$\overline{BORROW}$	"	"	"	"	"	"	"

See footnotes at end of table III.

TABLE III. Group A inspection for device type 08.

Symbol	MIL-STD-883 method	Case E,F,X	Terminal conditions 1/																Measured terminal	Test limits						Unit
			1	2	3	4	5	6	7	8	9	10	11	12	13	14	15	16		Subgroup 1 T_C = +25°C		Subgroup 2 T_C = +125°C		Subgroup 3 T_C = -55°C		
		2	2	3	4	5	7	8	9	10	12	13	14	15	17	18	19	20								
		Test no.	$\overline{\text{CLK}}$ 1A	CLR1	1QA	$\overline{\text{CLK}}$ 1B	1QB	1QC	1QD	GND	2QD	2QC	2QB	$\overline{\text{CLK}}$ 2B	2QA	CLR2	$\overline{\text{CLK}}$ 2A	V_{CC}		Min	Max	Min	Max	Min	Max	
$V_{IC(pos)}$		1	1mA							1/								GND	CLK 1A		1.5					V
		2		1mA						"								"	CLR1		"					"
		3				1mA				"								"	$\overline{\text{CLK}}$ 1B		"					"
		4								"				1mA				"	$\overline{\text{CLR}}$2		"					"
		5								"						1mA		"	$\overline{\text{CLK}}$ 2B		"					"
		6								"							1mA	"	$\overline{\text{CLR}}$2		"					"
																			$\overline{\text{CLK}}$ 2A							
$V_{IC(neg)}$		7	-1mA							GND								1/	CLK 1A		-1.5					"
		8		-1mA						"								"	CLR1		"					"
		9				-1mA				"								"	$\overline{\text{CLK}}$ 1B		"					"
		10								"				-1mA				"	$\overline{\text{CLK}}$ 2B		"					"
		11								"						-1mA		"	$\overline{\text{CLR}}$2		"					"
		12								"							-1mA	"	$\overline{\text{CLK}}$ 2A		"					"
I_{CCH}	3005	13	2/			2/				"				2/			2/	6.0V	V_{CC}		0.2		20			µA
I_{CCL}	3005	14	GND	24/		GND				"				GND		24/	GND	"	V_{CC}		0.2		20			µA
V_{OH3}	3006	15	24/	25/	-20µA					"								"	1QA	5.95		5.95		5.95		V
		16		"		24/	-20µA			"								"	1QB	"		"		"		"
		17		"		26/		-20µA		"								"	1QC	"		"		"		"
		18		"		27/			-20µA	"								"	1QD	"		"		"		"
		19								"					-20µA	25/	24/	"	2QA	"		"		"		"
		20								"			-20µA	24/		"		"	2QB	"		"		"		"
		21								"		-20µA		26/		"		"	2QC	"		"		"		"
		22								"	-20µA			27/		"		"	2QD	"		"		"		"
V_{OH5}	3006	23	24/	25/	-5.2mA					"								"	1QA	5.48		5.2		5.48		"
		24		"		24/	-5.2mA			"								"	1QB	"		"		"		"
		25		"		26/		-5.2mA		"								"	1QC	"		"		"		"
		26				27/			-5.2mA	"								"	1QD	"		"		"		"
		27								"			-5.2mA		-5.2mA	25/	24/	"	2QA	"		"		"		"
		28								"		-5.2mA		24/		"		"	2QB	"		"		"		"
		29								"				26/		"		"	2QC	"		"		"		"
		30								"	-5.2mA			27/		"		"	2QD	"		"		"		"
V_{OL3}	3007	31	24/	25/	20µA					"								"	1QA		0.05		0.05		0.05	"
		32		"		24/	20µA			"								"	1QB		"		"		"	"
		33		"		26/		20µA		"								"	1QC		"		"		"	"
		34		"		27/			20µA	"								"	1QD		"		"		"	"
		35								"					20µA	25/	24/	"	2QA		"		"		"	"
		36								"			20µA	24/		"		"	2QB		"		"		"	"
		37								"		20µA		26/		"		"	2QC		"		"		"	"
		38								"	20µA			27/		"		"	2QD		"		"		"	"
V_{OL5}	3007	39	24/	25/	5.2mA					"								"	1QA		0.26		0.4		0.26	"
		40		"		24/	5.2mA			"								"	1QB		"		"		"	"
		41		"		26/		5.2mA		"								"	1QC		"		"		"	"
		42		"		27/			5.2mA	"								"	1QD		"		"		"	"
		43								"			5.2mA		5.2mA	25/	24/	"	2QA		"		"		"	"
		44								"		5.2mA		24/		"		"	2QB		"		"		"	"
		45								"				26/		"		"	2QC		"		"		"	"
		46								"	5.2mA			27/		"		"	2QD		"		"		"	"
I_{OS4} 5/	3011	47	IN	IN	GND					"								4.0V	1QA	-10	-120	-10	-120	-10	-120	mA
		48				IN	GND			"								"	1QB	"	"	"	"	"	"	"
		49				"		GND		"								"	1QC	"	"	"	"	"	"	"
		50							GND	"								"	1QD	"	"	"	"	"	"	"
		51								"			GND		GND	IN	IN	"	2QA	"	"	"	"	"	"	"
		52								"		GND		IN		"		"	2QB	"	"	"	"	"	"	"
		53								"				"		"		"	2QC	"	"	"	"	"	"	"
		54								"	GND			"		"		"	2QD	"	"	"	"	"	"	"

See footnotes at end of table.

TABLE III. Group A inspection for device type 08 – Continued.

Symbol	MIL-STD-883 method	Case E,F,X 2	Terminal conditions 1/ 1	2	3	4	5	6	7	8	9	10	11	12	13	14	15	16	Measured terminal	Test limits Subgroup 1 T_C = +25°C Min	Max	Subgroup 2 T_C = +125°C Min	Max	Subgroup 3 T_C = -55°C Min	Max	Unit
			2	3	4	5	7	8	9	10	12	13	14	15	17	18	19	20								
		Test no.	CLK 1A	CLR1	1QA	CLK 1B	1QB	1QC	1QD	GND	2QD	2QC	2QB	CLK 2B	2QA	CLR2	CLK 2A	V_{CC}								
I_{IH}	3010	55	GND	6.0V		GND				GND				GND		GND	GND	6.0V	CLR1		0.05		0.1			µA
		56	6.0V	GND		GND				"				"		"	"	"	CLK 1A		"		"			"
		57	GND	"		6.0V				"				"		"	"	"	CLK 1B		"		"			"
		58	"	"		GND				"				"		6.0V	"	"	CLR2		"		"			"
		59	"	"		"				"				"		GND	6.0V	"	CLK 2A		"		"			"
		60	"	"		"				"				6.0V		GND	GND	"	CLK 2B		"		"			"
I_{IL}	3009	61	6.0V	"		6.0V				"				"		6.0V	6.0V	"	CLR1		-0.05		-0.1			"
		62	GND	6.0V		6.0V				"				"		"	"	"	CLK 1A		"		"			"
		63	6.0V	"		GND				"				"		"	"	"	CLK 1B		"		"			"
		64	"	"		6.0V				"				"		GND	"	"	CLR2		"		"			"
		65	"	"		"				"				"		6.0V	"	"	CLK 2A		"		"			"
		66	"	"		"				"				GND		6.0V	GND	"	CLK 2B		"		"			"
																				Subgroup 4 T_C = +25°C Min	Max					
C_C	3012	67		8/						GND								GND	CLR1		15					pF
		68								"						8/		"	CLR2		"					"
		69	8/							"								"	CLK 1A		"					"
		70				8/				"								"	CLK 1B		"					"
		71								"				8/				"	CLK 2B		"					"
		72								"							8/	"	CLK 2A		"					"
																			Measured terminals 9/	Subgroup 1 T_C = +25°C Min	Max	Subgroup 2 T_C = +125°C Min	Max	Subgroup 3 T_C = -55°C Min	Max	
Truth table tests 10/ 11/	3014	73	A	A	L	A	L	L	L	GND	L	L	L	A	L	A	A	4.5V	All outputs 12/ 13/							
		74	A	"	"	B	"	"	"	"	"	"	"	B	"	"	A	"									
		75	B	"	"	B	"	"	"	"	"	"	"	B	"	"	B	"									
		76	"	B	"	A	"	"	"	"	"	"	"	A	"	"	B	"									
		77	"	"	"	B	H	"	"	"	"	"	H	B	"	"	B	"									
		78	"	"	"	B	H	"	"	"	"	"	H	B	"	"	B	"									
		79	"	"	"	A	L	"	"	"	"	"	L	A	"	"	B	"									
		80	"	"	"	B	L	H	"	"	"	H	"	A	"	"	B	"									
		81	"	"	"	A	H	"	"	"	"	"	"	B	"	"	B	"									
		82	"	"	"	B	H	"	"	"	"	"	"	A	"	"	B	"									
		83	"	"	"	A	L	"	"	"	"	"	"	B	"	"	B	"									
		84	"	"	"	B	"	"	H	"	H	"	"	A	"	"	B	"									
		85	"	"	"	A	"	"	H	"	H	"	"	B	"	"	B	"									
		86	"	"	"	B	"	"	L	"	L	"	"	A	"	"	B	"									
		87	"	"	"	"	"	"	"	"	"	"	"	B	"	"	A	"									
		88	A	"	H	"	"	"	"	"	"	"	"	"	H	"	B	"									
																			Measured terminal	Subgroup 9 T_C = +25°C 14/ Min	Max	Subgroup 10 T_C = +125°C Min	Max	Subgroup 11 T_C = -55°C 14/ Min	Max	
f_{MAX} 15/ 30/	3003 Fig. 4	89	IN	GND	OUT					GND						GND		4.5V	CLK 1A to 1QA	31		23		31		MHz
		90		"						"					OUT	"	IN	"	CLK 2A to 2QA	"		"		"		"
		91		"		IN			OUT	"						"		"	CLK 1B to 1QD	"		"		"		"
		92		"						"	OUT			IN		"		"	CLK 2B to 2QD	"		"		"		"
t_{PLH1}	3003 Fig. 4	93	IN	GND	OUT					"								"	CLK 1A to 1QA	4	26	4	34	4	26	ns
		94	"	"				OUT		"								"	CLK 1A to 1QC	9	51	9	68	9	51	"
		95	"	"		IN	OUT			"								"	CLK 1B to 1QB	4	27	4	36	4	27	"
		96	"	"		"		OUT		"								"	CLK 1B to 1QC	5	37	5	49	5	37	"
		97	"	"					OUT	"								"	CLK 1B to 1QD	4	27	4	36	4	27	"
		98								"					OUT	GND	IN	"	CLK 2A to 2QA	4	26	4	34	4	26	"
		99								"		OUT				"	"	"	CLK 2A to 2QC	9	51	9	68	9	51	"
		100								"			OUT	IN		"		"	CLK 2B to 2QB	4	27	4	36	4	27	"
		101								"		OUT		"		"		"	CLK 2B to 2QC	5	37	5	49	5	37	"
		102								"	OUT			"		"		"	CLK 2B to 2QD	4	27	4	36	4	27	"

See footnotes at end of table III.

TABLE III. Group A inspection for device type 08 – Continued.

Symbol	MIL-STD-883 method	Case E,F,X	Terminal conditions 1/																Measured terminal	Test limits						Unit
			1	2	3	4	5	6	7	8	9	10	11	12	13	14	15	16		Subgroup 9 T_C = +25°C 14/		Subgroup 10 T_C = +125°C		Subgroup 11 T_C = -55°C 14/		
		2	2	3	4	5	7	8	9	10	12	13	14	15	17	18	19	20								
		Test no.	$\overline{CLK}$ 1A	CLR1	1QA	$\overline{CLK}$ 1B	1QB	1QC	1QD	GND	2QD	2QC	2QB	$\overline{CLK}$ 2B	2QA	CLR2	$\overline{CLK}$ 2A	V_{CC}		Min	Max	Min	Max	Min	Max	
t_{PHL1}	3003 Fig. 4	103	IN	GND	OUT					GND								4.5V	$\overline{CLK}$ 1A to 1QA	4	26	4	34	4	26	ns
		104	"	"				OUT		"								"	$\overline{CLK}$ 1A to 1QC	9	51	9	68	9	51	"
		105	"	"		IN	OUT			"								"	$\overline{CLK}$ 1B to 1QB	4	27	4	36	4	27	"
		106	"	"		"		OUT		"								"	$\overline{CLK}$ 1B to 1QC	5	37	5	49	5	37	"
		107	"	"		"			OUT	"								"	$\overline{CLK}$ 1B to 1QD	4	27	4	36	4	27	"
		108								"					OUT	GND	IN	"	$\overline{CLK}$ 2A to 2QA	4	26	4	34	4	26	"
		109								"		OUT				"	"	"	$\overline{CLK}$ 2A to 2QC	9	51	9	68	9	51	"
		110								"			OUT	IN		"		"	$\overline{CLK}$ 2B to 2QB	4	27	4	36	4	27	"
		111								"		OUT		"		"		"	$\overline{CLK}$ 2B to 2QC	5	37	5	49	5	37	"
		112								"	OUT			"		"		"	CLK 2B to 2QD	4	27	4	36	4	27	"
t_{PHL9}	3003 Fig. 4	113	28/	IN	OUT					"								"	CLR1 to 1QA	5	29	5	39	5	29	"
		114		"		28/	OUT			"								"	CLR1 to 1QB	"	"	"	"	"	"	"
		115		"		"		OUT		"								"	CLR1 to 1QC	"	"	"	"	"	"	"
		116		"		"			OUT	"								"	CLR1 to 1QD	"	"	"	"	"	"	"
		117								"					OUT	IN	5/	"	CLR2 to 2QA	"	"	"	"	"	"	"
		118								"			OUT	5/		"		"	CLR 2 to 2QB	"	"	"	"	"	"	"
		119								"		OUT		"		"		"	CLR2 to 2QC	"	"	"	"	"	"	"
		120								"	OUT			"		"		"	CLR2 to 2QD	"	"	"	"	"	"	"
t_{TLH}	3004 Fig. 4	121	23/	GND	OUT					GND								4.5V	1QA	3	15	3	20	3	15	ns
		122		"		23/	OUT			"								"	1QB	"	"	"	"	"	"	"
		123		"		"		OUT		"								"	1QC	"	"	"	"	"	"	"
		124		"		"			OUT	"								"	1QD	"	"	"	"	"	"	"
		125								"					OUT	GND	23/	"	2QA	"	"	"	"	"	"	"
		126								"			OUT	23/		"		"	2QB	"	"	"	"	"	"	"
		127								"		OUT				"		"	2QC	"	"	"	"	"	"	"
		128								"	OUT					"		"	2QD	"	"	"	"	"	"	"
t_{THL}	3004 Fig. 4	129	5/	IN	OUT					"								"	1QA	"	"	"	"	"	"	"
		130		"		5/	OUT			"								"	1QB	"	"	"	"	"	"	"
		131		"		"		OUT		"								"	1QC	"	"	"	"	"	"	"
		132		"		"			OUT	"								"	1QD	"	"	"	"	"	"	"
		133								"					OUT	IN	5/	"	2QA	"	"	"	"	"	"	"
		134								"			OUT	5/		"		"	2QB	"	"	"	"	"	"	"
		135								"		OUT				"		"	2QC	"	"	"	"	"	"	"
		136								"	OUT					"		"	2QD	"	"	"	"	"	"	"

See footnotes at end of table III.

TABLE III. Group A inspection for device type 09.

Symbol	MIL-STD-883 method	Case C,D 2	Terminal conditions 1/ 1	2	3	4	5	6	7	8	9	10	11	12	13	14	Measured terminal	Test limits Subgroup 1 T_C = +25°C Min	Subgroup 1 Max	Subgroup 2 T_C = +125°C Min	Subgroup 2 Max	Subgroup 3 T_C = -55°C Min	Subgroup 3 Max	Unit
		2	3	4	6	8	9	10	12	13	14	16	18	19	20									
		Test no.	$\overline{CLK}$ 1A	CLR1	1QA	1QB	1QC	1QD	GND	2QD	2QC	2QB	2QA	CLR2	$\overline{CLK}$ 2A	V_{CC}								
$V_{IC(pos)}$ 1/		1	1mA						1/							GND	$\overline{CLK}$ 1A		1.5					V
		2		1mA					"							"	CLR1		"					"
		3							"					1mA		"	CLR2		"					"
		4							"						1mA	"	$\overline{CLK}$ 2A		"					"
$V_{IC(neg)}$		5	-1mA						GND							1/	$\overline{CLK}$ 1A		-1.5					"
		6		-1mA					"							"	CLR1		"					"
		7							"					-1mA		"	CLR2		"					"
		8							"						-1mA	"	$\overline{CLK}$ 2A		"					"
I_{CCH}	3005	9	5/						"						5/	6.0V	V_{CC}		0.2		20			µA
I_{CCL}	3005	10	GND	25/					"					25/	GND	"	V_{CC}		0.2		20			µA
V_{OH3}	3006	11	5/	25/	-20µA				"							"	1QA	5.95		5.95		5.95		V
		12	"			-20µA			"							"	1QB	"		"		"		"
		13	"				-20µA		"							"	1QC	"		"		"		"
		14	"					-20µA	"							"	1QD	"		"		"		"
		15							"	-20µA				25/	5/	"	2QD	"		"		"		"
		16							"		-20µA				"	"	2QC	"		"		"		"
		17							"			-20µA			"	"	2QB	"		"		"		"
		18							"				-20µA		"	"	2QA	"		"		"		"
V_{OH5}	3006	19	5/	25/	-5.2mA				"							"	1QA	5.48		5.2		5.48		"
		20	"			-5.2mA			"							"	1QB	"		"		"		"
		21	"				-5.2mA		"							"	1QC	"		"		"		"
		22	"					-5.2mA	"							"	1QD	"		"		"		"
		23							"	-5.2mA				25/	5/	"	2QD	"		"		"		"
		24							"		-5.2mA				"	"	2QC	"		"		"		"
		25							"			-5.2mA			"	"	2QB	"		"		"		"
		26							"				-5.2mA		"	"	2QA	"		"		"		"
V_{OL3}	3007	27	34/	1.2V	20µA				"							"	1QA		0.05		0.05		0.05	"
		28	"	"		20µA			"							"	1QB		"		"		"	"
		29	"	"			20µA		"							"	1QC		"		"		"	"
		30	"	"				20µA	"							"	1QD		"		"		"	"
		31	"	12/					"	20µA					1.2V	"	2QD		"		"		"	"
		32	"	"					"		20µA				"	"	2QC		"		"		"	"
		33	"	"					"			20µA			"	"	2QB		"		"		"	"
		34	"	"					"				20µA		"	"	2QA		"		"		"	"
V_{OL5}	3007	35	"	1.2V	5.2mA				"							"	1QA		0.26		0.4		0.26	"
		36	"	"		5.2mA			"							"	1QB		"		"		"	"
		37	"	"			5.2mA		"							"	1QC		"		"		"	"
		38	"	"				5.2mA	"							"	1QD		"		"		"	"
		39	"	12/					"	5.2mA				1.2V		"	2QD		"		"		"	"
		40	"	"					"		5.2mA			"		"	2QC		"		"		"	"
		41	"	"					"			5.2mA		"		"	2QB		"		"		"	"
		42	"	"					"				5.2mA	"		"	2QA		"		"		"	"
I_{OS4} 5/	3011	43	IN	IN	GND				"							4.0V	1QA	-10	-120	-10	-120	-10	-120	mA
		44	"			GND			"							"	1QB	"	"	"	"	"	"	"
		45	"				GND		"							"	1QC	"	"	"	"	"	"	"
		46	"					GND	"							"	1QD	"	"	"	"	"	"	"
		47							"	GND				IN	IN	"	2QD	"	"	"	"	"	"	"
		48							"		GND				"	"	2QC	"	"	"	"	"	"	"
		49							"			GND			"	"	2QB	"	"	"	"	"	"	"
		50							"				GND		"	"	2QA	"	"	"	"	"	"	"
I_{IH}	3010	51	6.0V	GND					"							6.0V	$\overline{CLK}$ 1A		0.05		0.1			µA
		52	GND	6.0V					"							"	CLR1		"		"			"
		53							"					6.0V	GND	"	CLR2		"		"			"
		54							"					GND	6.0V	"	$\overline{CLK}$ 2A		"		"			"
I_{IL}	3009	55	GND	6.0V					"							"	$\overline{CLK}$ 1A		-0.05		-0.1			"
		56	6.0V	GND					"							"	CLR1		"		"			"
		57							"					GND	6.0V	"	CLR2		"		"			"
		58							"					6.0V	GND	"	$\overline{CLK}$ 2A		"		"			"

See footnotes at end of table III.

TABLE III. Group A inspection for device type 09 – Continued.

Symbol	MIL-STD-883 method	Case C,D 2 Test no.	Terminal conditions 1/ 1 $\overline{CLK}$ 1A	2 CLR1	3 1QA	4 1QB	5 1QC	6 1QD	7 GND	8 2QD	9 2QC	10 2QB	11 2QA	12 CLR2	13 $\overline{CLK}$ 2A	14 V_{CC}	Measured terminal	Test limits Subgroup 4 T_C = +25°C Min	Max					Unit
C_C	3012	59		8/					GND							GND	CLR1		15					pF
		60							"					8/		"	CLR2		"					"
		61	8/						"							"	$\overline{CLK}$ 1A		"					"
		62							"						8/	"	$\overline{CLK}$ 2A		"					"
																	Measured terminal 9/	Subgroup 7 T_C = +25°C Min	Max	Subgroup 8 T_C = +125°C Min	Max	Subgroup 8 T_C = -55°C Min	Max	
Truth table tests 10/ 11/	3014	63	A	A	L	L	L	L	GND	L	L	L	L	A	A	4.5V	All outputs 12/ 13/							
		64	B	A	"	"	"	"	"	"	"	"	"	A	B	"								
		65	B	B	"	"	"	"	"	"	"	"	"	B	B	"								
		66	A	"	"	"	"	"	"	"	"	"	"	"	A	"								
		67	B	"	H	"	"	"	"	"	"	"	H	"	B	"								
		68	A	"	H	"	"	"	"	"	"	"	H	"	A	"								
		69	B	"	L	H	"	"	"	"	"	H	L	"	B	"								
		70	A	"	L	"	"	"	"	"	"	"	L	"	A	"								
		71	B	"	H	"	"	"	"	"	"	"	H	"	B	"								
		72	A	"	H	"	"	"	"	"	"	"	H	"	A	"								
		73	B	"	L	L	H	"	"	"	H	L	L	"	B	"								
		74	A	"	L	"	"	"	"	"	"	"	L	"	A	"								
		75	B	"	H	"	"	"	"	"	"	"	H	"	B	"								
		76	A	"	H	"	"	"	"	"	"	"	H	"	A	"								
		77	B	"	L	H	"	"	"	"	"	H	L	"	B	"								
		78	A	"	L	"	"	"	"	"	"	"	L	"	A	"								
		79	B	"	H	"	"	"	"	"	"	"	H	"	B	"								
		80	A	"	H	"	"	"	"	"	"	"	H	"	A	"								
		81	B	"	L	L	L	H	"	H	L	L	L	"	B	"								
		82	A	"	L	"	"	"	"	"	"	"	L	"	A	"								
		83	B	"	H	"	"	"	"	"	"	"	H	"	B	"								
		84	A	"	H	"	"	"	"	"	"	"	H	"	A	"								
		85	B	"	L	H	"	"	"	"	"	H	L	"	B	"								
		86	A	"	L	"	"	"	"	"	"	"	L	"	A	"								
		87	B	"	H	"	"	"	"	"	"	"	H	"	B	"								
		88	A	"	H	"	"	"	"	"	"	"	H	"	A	"								
		89	B	"	L	L	H	"	"	"	H	L	L	"	B	"								
		90	A	"	L	"	"	"	"	"	"	"	L	"	A	"								
		91	B	"	H	"	"	"	"	"	"	"	H	"	B	"								
		92	A	"	H	"	"	"	"	"	"	"	H	"	A	"								
		93	B	"	L	H	"	"	"	"	"	H	L	"	B	"								
		94	A	"	L	"	"	"	"	"	"	"	L	"	A	"								
		95	B	"	H	"	"	"	"	"	"	"	H	"	B	"								
		96	B	A	L	L	L	L	"	L	L	L	L	A	B	"								
																	Measured terminal	Subgroup 9 T_C = +25°C Min	Max	Subgroup 10 T_C = +125°C Min	Max	Subgroup 11 T_C = -55°C Min	Max	
f_{MAX} 15/	3003	97	IN	GND	OUT				GND							4.5V	$\overline{CLK}$ 1A to 1QA	28		21		28		MHz
		98							"				OUT	GND	IN	"	$\overline{CLK}$ 2A to 2QA	28		21		28		MHz
t_{PLH1}	3003 Fig. 4	99	IN	GND	OUT				"							"	$\overline{CLK}$ 1A to 1QA	4	24	4	32	4	24	ns
		100	"	"		OUT			"							"	$\overline{CLK}$ 1A to 1QB	6	34	6	45	6	34	"
		101	"	"			OUT		"							"	$\overline{CLK}$ 1A to 1QC	8	42	8	56	8	42	"
		102	"	"				OUT	"							"	$\overline{CLK}$ 1A to 1QD	9	55	9	73	9	55	"
		103							"				OUT	GND	IN	"	$\overline{CLK}$ 2A to 2QA	4	24	4	32	4	24	"
		104							"			OUT		"	"	"	$\overline{CLK}$ 2A to 2QB	6	34	6	45	6	34	"
		105							"		OUT			"	"	"	$\overline{CLK}$ 2A to 2QC	8	42	8	56	8	42	"
		106							"	OUT				"	"	"	$\overline{CLK}$ 2A to 2QD	9	55	9	73	9	55	"

See footnotes at end of table III.

TABLE III. Group A inspection for device type 09 – Continued.

Symbol	MIL-STD-883 method	Case C,D 2	Terminal conditions 1/ 1	2	3	4	5	6	7	8	9	10	11	12	13	14	Measured terminal	Test limits Subgroup 9 T_C = +25°C Min	Subgroup 9 Max	Subgroup 10 T_C = +125°C Min	Subgroup 10 Max	Subgroup 11 T_C = -55°C Min	Subgroup 11 Max	Unit
		2	2	3	4	6	8	9	10	12	13	14	16	18	19	20								
		Test no.	$\overline{CLK}$ 1A	CLR1	1QA	1QB	1QC	1QD	GND	2QD	2QC	2QB	2QA	CLR2	$\overline{CLK}$ 2A	V_{CC}								
t_{PHL1}	3003 Fig. 4	107	IN	GND	OUT				GND							4.5V	$\overline{CLK}$ 1A to 1QA	4	24	4	32	4	24	ns
		108		"		OUT			"							"	$\overline{CLK}$ 1A to 1QB	6	34	6	45	6	34	"
		109		"			OUT		"							"	$\overline{CLK}$ 1A to 1QC	8	42	8	56	8	42	"
		110		"				OUT	"							"	$\overline{CLK}$ 1A to 1QD	9	55	9	73	9	55	"
		111							"				OUT	GND	IN	"	$\overline{CLK}$ 2A to 2QA	4	24	4	32	4	24	"
		112							"			OUT		"		"	$\overline{CLK}$ 2A to 2QB	6	34	6	45	6	34	"
		113							"		OUT			"		"	$\overline{CLK}$ 2A to 2QC	8	42	8	56	8	42	"
		114							"	OUT				"		"	CLK 2A to 2QD	9	55	9	73	9	55	"
t_{PHL9}	3003 Fig. 4	115	5/	IN	OUT				"							"	CLR1 to 1QA	5	29	5	39	5	29	"
		116	"	"		OUT			"							"	CLR1 to 1QB	"	"	"	"	"	"	"
		117	"	"			OUT		"							"	CLR1 to 1QC	"	"	"	"	"	"	"
		118	"	"				OUT	"							"	CLR1 to 1QD	"	"	"	"	"	"	"
		119							"				OUT	IN	5/	"	CLR2 to 2QA	"	"	"	"	"	"	"
		120							"			OUT		"	"	"	CLR2 to 2QB	"	"	"	"	"	"	"
		121							"		OUT			"	"	"	CLR2 to 2QC	"	"	"	"	"	"	"
		122							"	OUT				"	"	"	CLR2 to 2QD	"	"	"	"	"	"	"
t_{TLH}	3004 Fig. 4	123	IN	GND	OUT				"							"	1QA	3	15	3	20	3	15	"
		124	"			OUT			"							"	1QB	"	"	"	"	"	"	"
		125	"				OUT		"							"	1QC	"	"	"	"	"	"	"
		126	"					OUT	"							"	1QD	"	"	"	"	"	"	"
		127							"				OUT	GND	IN	"	2QA	"	"	"	"	"	"	"
		128							"			OUT		"	"	"	2QB	"	"	"	"	"	"	"
		129							"		OUT			"	"	"	2QC	"	"	"	"	"	"	"
		130							"	OUT				"	"	"	2QD	"	"	"	"	"	"	"
t_{THL}	3004 Fig. 4	131	5/	IN	OUT				"							"	1QA	"	"	"	"	"	"	"
		132	"	"		OUT			"							"	1QB	"	"	"	"	"	"	"
		133	"	"			OUT		"							"	1QC	"	"	"	"	"	"	"
		134	"	"				OUT	"							"	1QD	"	"	"	"	"	"	"
		135							"				OUT	IN	34/	"	2QA	"	"	"	"	"	"	"
		136							"			OUT		"	"	"	2QB	"	"	"	"	"	"	"
		137							"		OUT			"	"	"	2QC	"	"	"	"	"	"	"
		138							"	OUT				"	"	"	2QD	"	"	"	"	"	"	"

See footnotes at end of table III.

TABLE III. Group A inspection for device type 10.

Symbol	MIL-STD-883 method	Case E,F,X	Terminal conditions 1/																Measured terminal	Test limits						Unit
			1	2	3	4	5	6	7	8	9	10	11	12	13	14	15	16		Subgroup 1 T_C = +25°C		Subgroup 2 T_C = +125°C		Subgroup 3 T_C = -55°C		
		2	2	3	4	5	7	8	9	10	12	13	14	15	17	18	19	20								
		Test no.	5 OUT	1 OUT	0 OUT	2 OUT	6 OUT	7 OUT	3 OUT	GND	8 OUT	4 OUT	9 OUT	CARRY OUT	CLOCK ENABLE	CLK	CLR	V_{CC}		Min	Max	Min	Max	Min	Max	
$V_{IC(pos)}$		1								1/							1mA	GND	CLR	1/	1.5					V
		2								"						1mA		"	CLK		"					"
		3								"					1mA			"	CLK ENABLE		"					"
$V_{IC(neg)}$		4								GND							-1mA	1/	CLR		-1.5					"
		5								"						-1mA		"	CLK		"					"
		6								"					-1mA			"	CLK ENABLE		"					"
I_{CCH}	3005	7								"					GND	GND	6.0V	6.0V	V_{CC}		0.2		20			µA
I_{CCL}	29/	8								"					"	PA	GND	"	"		"		"			"
I_{CCH}		9								"					"	PF	"	"	"		"		"			"
I_{CCH}		10								"					"	6.0V	"	"	"		"		"			"
V_{OH3}	3006	11								"					"	IN	GND	6.0V	0 OUT	5.95		5.95		5.95		V
	2/	12		-20µA	-20µA					"					"	"	"	"	1 OUT	"		"		"		"
		13				-20µA				"					"	"	"	"	2 OUT	"		"		"		"
		14							-20µA	"					"	"	"	"	3 OUT	"		"		"		"
		15								"		-20µA			"	"	"	"	4 OUT	"		"		"		"
		16	-20µA							"					"	"	"	"	5 OUT	"		"		"		"
		17					-20µA			"					"	"	"	"	6 OUT	"		"		"		"
		18						-20µA		"					"	"	"	"	7 OUT	"		"		"		"
		19								"	-20µA				"	"	"	"	8 OUT	"		"		"		"
		20								"			-20µA		"	"	"	"	9 OUT	"		"		"		"
		21								"				-20µA	"	"	"	"	CARRY OUT	"		"		"		"
V_{OH5}	3006	22								"					"	"	"	"	0 OUT	5.48		5.2		5.48		"
	2/	23		-5.2mA	-5.2mA					"					"	"	"	"	1 OUT	"		"		"		"
		24				-5.2mA				"					"	"	"	"	2 OUT	"		"		"		"
		25							-5.2mA	"					"	"	"	"	3 OUT	"		"		"		"
		26								"		-5.2mA			"	"	"	"	4 OUT	"		"		"		"
		27	-5.2mA							"					"	"	"	"	5 OUT	"		"		"		"
		28					-5.2mA			"					"	"	"	"	6 OUT	"		"		"		"
		29						-5.2mA		"					"	"	"	"	7 OUT	"		"		"		"
		30								"	-5.2mA				"	"	"	"	8 OUT	"		"		"		"
		31								"			-5.2mA		"	"	"	"	9 OUT	"		"		"		"
		32								"				-5.2mA	"	"	"	"	CARRY OUT	"		"		"		"
V_{OL3}	3007	33								"					"	"	"	"	0 OUT		0.05		0.05		0.05	V
	4/	34		20µA	20µA					"					"	"	"	"	1 OUT		"		"		"	"
		35				20µA				"					"	"	"	"	2 OUT		"		"		"	"
		36							20µA	"					"	"	"	"	3 OUT		"		"		"	"
		37								"		20µA			"	"	"	"	4 OUT		"		"		"	"
		38	20µA							"					"	"	"	"	5 OUT		"		"		"	"
		39					20µA			"					"	"	"	"	6 OUT		"		"		"	"
		40						20µA		"					"	"	"	"	7 OUT		"		"		"	"
		41								"	20µA				"	"	"	"	8 OUT		"		"		"	"
		42								"			20µA		"	"	"	"	9 OUT		"		"		"	"
		43								"				20µA	"	"	"	"	CARRY OUT		"		"		"	"
V_{OL5}	3007	44								"					"	"	"	"	0 OUT		0.26		0.4		0.26	"
	4/	45		5.2mA	5.2mA					"					"	"	"	"	1 OUT		"		"		"	"
		46				5.2mA				"					"	"	"	"	2 OUT		"		"		"	"
		47							5.2mA	"					"	"	"	"	3 OUT		"		"		"	"
		48								"		5.2mA			"	"	"	"	4 OUT		"		"		"	"
		49	5.2mA							"					"	"	"	"	5 OUT		"		"		"	"
		50					5.2mA			"					"	"	"	"	6 OUT		"		"		"	"
		51						5.2mA		"					"	"	"	"	7 OUT		"		"		"	"
		52								"	5.2mA				"	"	"	"	8 OUT		"		"		"	"
		53								"			5.2mA		"	"	"	"	9 OUT		"		"		"	"
		54								"				5.2mA	"	"	"	"	CARRY OUT		"		"		"	"
I_{IH}	3010	55								"					GND	GND	6.0V	6.0V	CLR		0.05		0.1			µA
		56								"					GND	6.0V	GND	"	CLK		"		"			"
		57								"					6.0V	GND	GND	"	CLK ENABLE		"		"			"
I_{IL}	3009	58								"					"	6.0V	GND	"	CLR		-0.05		-0.1			"
		59								"					"	GND	6.0V	"	CLK		"		"			"
		60								"					GND	6.0V	6.0V	"	CLK ENABLE		"		"			"

See footnotes at end of table III.

TABLE III. Group A inspection for device type 10 – Continued.

Symbol	MIL-STD-883 method	Case E,F,X	Terminal conditions 1/ 1	2	3	4	5	6	7	8	9	10	11	12	13	14	15	16	Measured terminal	Test limits Subgroup 1 T_C = +25°C Min	Subgroup 1 Max	Subgroup 2 T_C = +125°C Min	Subgroup 2 Max	Subgroup 3 T_C = -55°C Min	Subgroup 3 Max	Unit
		2	2	3	4	5	7	8	9	10	12	13	14	15	17	18	19	20								
		Test no.	5 OUT	1 OUT	0 OUT	2 OUT	6 OUT	7 OUT	3 OUT	GND	8 OUT	4 OUT	9 OUT	CARRY OUT	$\overline{\text{CLOCK ENABLE}}$	CLK	CLR	V_{CC}								
I_{OS4} 5/	3011	61			GND					GND					GND	IN	GND	4.0V	0 OUT	-10	-120	-10	-120	-10	-120	mA
		62		GND						"					"	"	"	"	1 OUT	"	"	"	"	"	"	"
		63				GND				"					"	"	"	"	2 OUT	"	"	"	"	"	"	"
		64							GND	"					"	"	"	"	3 OUT	"	"	"	"	"	"	"
		65								"		GND			"	"	"	"	4 OUT	"	"	"	"	"	"	"
		66	GND							"					"	"	"	"	5 OUT	"	"	"	"	"	"	"
		67					GND			"					"	"	"	"	6 OUT	"	"	"	"	"	"	"
		68						GND		"					"	"	"	"	7 OUT	"	"	"	"	"	"	"
		69								"	GND				"	"	"	"	8 OUT	"	"	"	"	"	"	"
		70								"			GND		"	"	"	"	9 OUT	"	"	"	"	"	"	"
		71								"				GND	"	"	"	"	CARRY OUT	"	"	"	"	"	"	"
																				Subgroup 4 T_C = +25°C Min	Subgroup 4 Max					
C_C	3012	72								GND							8/	GND	CLR		15					pF
		73								"						8/		"	CLK		"					"
		74								"					8/			"	CLK ENABLE		"					"
																			Measured terminal 9/	Subgroup 7 T_C = +25°C Min	Subgroup 7 Max	Subgroup 8 T_C = +125°C Min	Subgroup 8 Max	Subgroup 8 T_C = -55°C Min	Subgroup 8 Max	
Truth table tests 17/	3014	75	L	L	H	L	L	L	L	GND	L	L	L	H	GND	4.5V	4.5V	4.5V	Each output							
		76	"	L	H	"	"	"	"	"	"	"	"	"	"	4.5V	GND	"								
		77	"	H	L	"	"	"	"	"	"	"	"	"	"	PA	"	"								
		78	"	L	"	H	"	"	"	"	"	"	"	"	"	"	"	"								
		79	"	"	"	L	"	"	H	"	"	"	"	"	"	"	"	"								
		80	"	"	"	"	"	"	"	"	"	H	"	"	"	"	"	"								
		81	H	"	"	"	"	"	"	"	"	L	"	L	"	"	"	"								
		82	L	"	"	"	H	"	"	"	"	"	"	"	"	"	"	"								
		83	"	"	"	"	L	H	"	"	"	"	"	"	"	"	"	"								
		84	"	"	"	"	"	L	"	"	H	"	"	"	"	"	"	"								
		85	"	"	"	"	"	"	"	"	"	"	H	"	"	"	"	"								
		86	"	"	H	"	"	"	"	"	"	"	L	H	"	"	"	"								
		87	"	H	L	"	"	"	"	"	"	"	"	"	"	"	"	"								
		88	"	"	"	"	"	"	"	"	"	"	"	"	4.5V	4.5V	"	"								
		89	"	"	"	"	"	"	"	"	"	"	"	"	4.5V	PA	"	"								
		90	"	L	"	H	"	"	"	"	"	"	"	"	GND	4.5V	"	"								
		91	X	X	X	X	X	X	X	"	X	X	X	X	"	PC	"	"								
		92	H	L	L	L	L	L	L	"	L	L	L	L	"	4.5V	"	"								
		93	H	"	L	"	"	"	"	"	"	"	"	L	"	GND	"	"								
		94	L	"	H	"	"	"	"	"	"	"	"	H	"	"	4.5V	"								
		95	"	"	H	"	"	"	"	"	"	"	"	"	"	"	GND	"								
		96	"	H	L	"	"	"	"	"	"	"	"	"	"	4.5V	"	"								
		97	X	X	X	X	X	X	X	"	X	X	X	X	"	PD	"	"								
		98	H	L	L	L	L	L	L	"	L	L	L	L	"	4.5V	"	"								
		99	L	"	H	"	"	"	"	"	"	"	"	H	"	"	4.5V	"								
		100	L	"	H	"	"	"	"	"	"	"	"	H	"	"	GND	"								

See footnotes at end of table III.

TABLE III. Group A inspection for device type 10 – Continued.

Symbol	MIL-STD-883 method	Case E,F,X	Terminal conditions 1/ 1	2	3	4	5	6	7	8	9	10	11	12	13	14	15	16	Measured terminal	Test limits Subgroup 9 T_C = +25°C 14/		Subgroup 10 T_C = +125°C		Subgroup 11 T_C = -55°C 14/		Unit
		2	2	3	4	5	7	8	9	10	12	13	14	15	17	18	19	20								
		Test no.	5 OUT	1 OUT	0 OUT	2 OUT	6 OUT	7 OUT	3 OUT	GND	8 OUT	4 OUT	9 OUT	CARRY OUT	CLOCK ENABLE	CLK	CLR	V_{CC}		Min	Max	Min	Max	Min	Max	
t_{PHL1}	3003 Fig. 4	101			OUT					GND					GND	IN	GND	4.5V	CLK to 0 OUT	6	40	6	54	6	40	ns
		102		OUT						"					"	"	"	"	CLK to 1 OUT	"	"	"	"	"	"	"
		103				OUT				"					"	"	"	"	CLK to 2 OUT	"	"	"	"	"	"	"
		104							OUT	"					"	"	"	"	CLK to 3 OUT	"	"	"	"	"	"	"
		105								"		OUT			"	"	"	"	CLK to 4 OUT	"	"	"	"	"	"	"
		106	OUT							"					"	"	"	"	CLK to 5 OUT	"	"	"	"	"	"	"
		107					OUT			"					"	"	"	"	CLK to 6 OUT	"	"	"	"	"	"	"
		108						OUT		"					"	"	"	"	CLK to 7 OUT	"	"	"	"	"	"	"
		109								"	OUT				"	"	"	"	CLK to 8 OUT	"	"	"	"	"	"	"
		110								"			OUT		"	"	"	"	CLK to 9 OUT	"	"	"	"	"	"	"
		111								"				OUT	"	"	"	"	CLK to CARRY OUT	"	"	"	"	"	"	"
t_{PLH1}	3003 Fig. 4	112			OUT					"					"	"	"	"	CLK to 0 OUT	"	"	"	"	"	"	"
		113		OUT						"					"	"	"	"	CLK to 1 OUT	"	"	"	"	"	"	"
		114				OUT				"					"	"	"	"	CLK to 2 OUT	"	"	"	"	"	"	"
		115							OUT	"					"	"	"	"	CLK to 3 OUT	"	"	"	"	"	"	"
		116								"		OUT			"	"	"	"	CLK to 4 OUT	"	"	"	"	"	"	"
		117	OUT							"					"	"	"	"	CLK to 5 OUT	"	"	"	"	"	"	"
		118					OUT			"					"	"	"	"	CLK to 6 OUT	"	"	"	"	"	"	"
		119						OUT		"					"	"	"	"	CLK to 7 OUT	"	"	"	"	"	"	"
		120								"	OUT				"	"	"	"	CLK to 8 OUT	"	"	"	"	"	"	"
		121								"			OUT		"	"	"	"	CLK to 9 OUT	"	"	"	"	"	"	"
		122								"				OUT	"	"	"	"	CLK to CARRY OUT	"	"	"	"	"	"	"
t_{PHL9}	3003 Fig. 4	123			OUT					"					"	"	IN	"	CLR to 0 OUT	"	"	"	"	"	"	"
		124		OUT						"					"	"	"	"	CLR to 1 OUT	"	"	"	"	"	"	"
		125				OUT				"					"	"	"	"	CLR to 2 OUT	"	"	"	"	"	"	"
		126							OUT	"					"	"	"	"	CLR to 3 OUT	"	"	"	"	"	"	"
		127								"		OUT			"	"	"	"	CLR to 4 OUT	"	"	"	"	"	"	"
		128	OUT							"					"	"	"	"	CLR to 5 OUT	"	"	"	"	"	"	"
		129					OUT			"					"	"	"	"	CLR to 6 OUT	"	"	"	"	"	"	"
		130						OUT		"					"	"	"	"	CLR to 7 OUT	"	"	"	"	"	"	"
		131								"	OUT				"	"	"	"	CLR to 8 OUT	"	"	"	"	"	"	"
		132								"			OUT		"	"	"	"	CLR to 9 OUT	"	"	"	"	"	"	"
		133								"				OUT	"	"	"	"	CLR to CARRY OUT	"	"	"	"	"	"	"
t_{PLH9}	3003 Fig. 4	112			OUT					"					"	"	"	"	CLR to 0 OUT	"	"	"	"	"	"	"
		113		OUT						"					"	"	"	"	CLR to 1 OUT	"	"	"	"	"	"	"
		114				OUT				"					"	"	"	"	CLR to 2 OUT	"	"	"	"	"	"	"
		115							OUT	"					"	"	"	"	CLR to 3 OUT	"	"	"	"	"	"	"
		116								"		OUT			"	"	"	"	CLR to 4 OUT	"	"	"	"	"	"	"
		117	OUT							"					"	"	"	"	CLR to 5 OUT	"	"	"	"	"	"	"
		118					OUT			"					"	"	"	"	CLR to 6 OUT	"	"	"	"	"	"	"
		119						OUT		"					"	"	"	"	CLR to 7 OUT	"	"	"	"	"	"	"
		120								"	OUT				"	"	"	"	CLR to 8 OUT	"	"	"	"	"	"	"
		121								"			OUT		"	"	"	"	CLR to 9 OUT	"	"	"	"	"	"	"
		122								"				OUT	"	"	"	"	CLR to CARRY OUT	"	"	"	"	"	"	"
t_{PHL4}	3003 Fig. 4	145			OUT					"					IN	"	GND	"	$\overline{CE}$ to 0 OUT	7	44	7	59	7	44	ns
		146		OUT						"					"	"	"	"	$\overline{CE}$ to 1 OUT	"	"	"	"	"	"	"
		147				OUT				"					"	"	"	"	$\overline{CE}$ to 2 OUT	"	"	"	"	"	"	"
		148							OUT	"					"	"	"	"	$\overline{CE}$ to 3 OUT	"	"	"	"	"	"	"
		149								"		OUT			"	"	"	"	$\overline{CE}$ to 4 OUT	"	"	"	"	"	"	"
		150	OUT							"					"	"	"	"	$\overline{CE}$ to 5 OUT	"	"	"	"	"	"	"
		151					OUT			"					"	"	"	"	$\overline{CE}$ to 6 OUT	"	"	"	"	"	"	"
		152						OUT		"					"	"	"	"	$\overline{CE}$ to 7 OUT	"	"	"	"	"	"	"
		153								"	OUT				"	"	"	"	$\overline{CE}$ to 8 OUT	"	"	"	"	"	"	"
		154								"			OUT		"	"	"	"	$\overline{CE}$ to 9 OUT	"	"	"	"	"	"	"
		155								"				OUT	"	"	"	"	CE to CARRY OUT	"	"	"	"	"	"	"

See footnotes at end of table III.

TABLE III. Group A inspection for device type 10 – Continued.

Symbol	MIL-STD-883 method	Case E,F,X	Terminal conditions 1/																Measured terminal	Test limits						Unit
			1	2	3	4	5	6	7	8	9	10	11	12	13	14	15	16		Subgroup 9 T_C = +25°C 14/		Subgroup 10 T_C = +125°C		Subgroup 11 T_C = -55°C 14/		
		2	2	3	4	5	7	8	9	10	12	13	14	15	17	18	19	20								
		Test no.	5 OUT	1 OUT	0 OUT	2 OUT	6 OUT	7 OUT	3 OUT	GND	8 OUT	4 OUT	9 OUT	CARRY OUT	$\overline{\text{CLOCK}}$ $\overline{\text{ENABLE}}$	CLK	CLR	V_{CC}		Min	Max	Min	Max	Min	Max	
t_{PLH4}	3003 Fig. 4	156			OUT					GND					IN	IN	GND	4.5V	$\overline{\text{CE}}$ to 0 OUT	7	44	7	59	7	44	ns
		157		OUT						"					"	"	"	"	$\overline{\text{CE}}$ to 1 OUT	"	"	"	"	"	"	"
		158				OUT				"					"	"	"	"	$\overline{\text{CE}}$ to 2 OUT	"	"	"	"	"	"	"
		159							OUT	"					"	"	"	"	$\overline{\text{CE}}$ to 3 OUT	"	"	"	"	"	"	"
		160								"		OUT			"	"	"	"	$\overline{\text{CE}}$ to 4 OUT	"	"	"	"	"	"	"
		161	OUT							"					"	"	"	"	$\overline{\text{CE}}$ to 5 OUT	"	"	"	"	"	"	"
		162					OUT			"					"	"	"	"	$\overline{\text{CE}}$ to 6 OUT	"	"	"	"	"	"	"
		163						OUT		"					"	"	"	"	$\overline{\text{CE}}$ to 7 OUT	"	"	"	"	"	"	"
		164								"	OUT				"	"	"	"	$\overline{\text{CE}}$ to 8 OUT	"	"	"	"	"	"	"
		165								"			OUT		"	"	"	"	$\overline{\text{CE}}$ to 9 OUT	"	"	"	"	"	"	"
		166								"				OUT	"	"	"	"	CE to CARRY OUT	"	"	"	"	"	"	"
f_{MAX} 15/	3003 Fig. 4	167			OUT					"					GND	"	"	"	0 OUT	23		17		23		MHz
t_{THL}	3004 Fig. 4	168			OUT					"					"	"	"	"	0 OUT	3	15	3	20	3	15	ns
		169		OUT						"					"	"	"	"	1 OUT	"	"	"	"	"	"	"
		170				OUT				"					"	"	"	"	2 OUT	"	"	"	"	"	"	"
		171							OUT	"					"	"	"	"	3 OUT	"	"	"	"	"	"	"
		172								"		OUT			"	"	"	"	4 OUT	"	"	"	"	"	"	"
		173	OUT							"					"	"	"	"	5 OUT	"	"	"	"	"	"	"
		174					OUT			"					"	"	"	"	6 OUT	"	"	"	"	"	"	"
		175						OUT		"					"	"	"	"	7 OUT	"	"	"	"	"	"	"
		176								"	OUT				"	"	"	"	8 OUT	"	"	"	"	"	"	"
		177								"			OUT		"	"	"	"	9 OUT	"	"	"	"	"	"	"
		178								"				OUT	"	"	"	"	CARRY OUT	"	"	"	"	"	"	"
t_{TLH}	3004 Fig. 4	180			OUT					"					"	"	"	"	0 OUT	"	"	"	"	"	"	"
		181		OUT						"					"	"	"	"	1 OUT	"	"	"	"	"	"	"
		182				OUT				"					"	"	"	"	2 OUT	"	"	"	"	"	"	"
		183							OUT	"					"	"	"	"	3 OUT	"	"	"	"	"	"	"
		184								"		OUT			"	"	"	"	4 OUT	"	"	"	"	"	"	"
		185	OUT							"					"	"	"	"	5 OUT	"	"	"	"	"	"	"
		186					OUT			"					"	"	"	"	6 OUT	"	"	"	"	"	"	"
		187						OUT		"					"	"	"	"	7 OUT	"	"	"	"	"	"	"
		188								"	OUT				"	"	"	"	8 OUT	"	"	"	"	"	"	"
		189								"			OUT		"	"	"	"	9 OUT	"	"	"	"	"	"	"
		190								"				OUT	"	"	"	"	CARRY OUT	"	"	"	"	"	"	"

See footnotes at end of table III.

TABLE III. Group A inspection for device type 11.

Symbol	MIL-STD-883 method	Case E,F,X	Terminal conditions 1/																Measured terminal	Test limits						Unit
			1	2	3	4	5	6	7	8	9	10	11	12	13	14	15	16		Subgroup 1 T_C = +25°C		Subgroup 2 T_C = +125°C		Subgroup 3 T_C = -55°C		
		2	2	3	4	5	7	8	9	10	12	13	14	15	17	18	19	20								
		Test no.	Q12	Q13	Q14	Q6	Q5	Q7	Q4	GND	Q1	CLK	CLR	Q9	Q8	Q10	Q11	V_{CC}		Min	Max	Min	Max	Min	Max	
$V_{IC(pos)}$		1								1/		1mA						GND	CLK	1/	1.5					V
		2								1/			1mA					GND	CLR		1.5					"
$V_{IC(neg)}$		3								GND		-1mA						1/	CLK		-1.5					"
		4								"			-1mA					1/	CLR		-1.5					"
I_{CCH}	3005	5								"		GND	6.0V					6.0V	V_{CC}		0.2		20			µA
I_{CCL}		6								"		GND	GND					"	V_{CC}		0.2		20			µA
I_{CCL}		7								"		17/	"					"	None							
I_{CCL}		8								"		GND	"					"	V_{CC}		0.2		20			µA
I_{CCL}		9								"		17/	"					"	None							
I_{CCH}		10								"		6.0V	"					"	V_{CC}		0.2		20			µA
V_{OH3}	3006 2/	11								"	-20µA	IN	IN					"	Q1	5.95		5.95		5.95		V
		12							-20µA	"		"	"					"	Q4	"		"		"		"
		13					-20µA			"		"	"					"	Q5	"		"		"		"
		14				-20µA				"		"	"					"	Q6	"		"		"		"
		15						-20µA		"		"	"					"	Q7	"		"		"		"
		16								"		"	"		-20µA			"	Q8	"		"		"		"
		17								"		"	"	-20µA				"	Q9	"		"		"		"
		18								"		"	"			-20µA		"	Q10	"		"		"		"
		19								"		"	"				-20µA	"	Q11	"		"		"		"
		20	-20µA							"		"	"					"	Q12	"		"		"		"
		21		-20µA						"		"	"					"	Q13	"		"		"		"
		22			-20µA					"		"	"					"	Q14	"		"		"		"
V_{OH5}	3006 2/	23								"	-5.2mA	"	"					"	Q1	5.48		5.2		5.48		"
		24							-5.2mA	"		"	"					"	Q4	"		"		"		"
		25					-5.2mA			"		"	"					"	Q5	"		"		"		"
		26				-5.2mA				"		"	"					"	Q6	"		"		"		"
		27						-5.2mA		"		"	"					"	Q7	"		"		"		"
		28								"		"	"		-5.2mA			"	Q8	"		"		"		"
		29								"		"	"	-5.2mA				"	Q9	"		"		"		"
		30								"		"	"			-5.2mA		"	Q10	"		"		"		"
		31								"		"	"				-5.2mA	"	Q11	"		"		"		"
		32	-5.2mA							"		"	"					"	Q12	"		"		"		"
		33		-5.2mA						"		"	"					"	Q13	"		"		"		"
		34			-5.2mA					"		"	"					"	Q14	"		"		"		"
V_{OL3}	3007 4/	35								"	20µA	"	"					"	Q1		0.05		0.05		0.05	"
		36							20µA	"		"	"					"	Q4		"		"		"	"
		37					20µA			"		"	"					"	Q5		"		"		"	"
		38				20µA				"		"	"					"	Q6		"		"		"	"
		39						20µA		"		"	"					"	Q7		"		"		"	"
		40								"		"	"		20µA			"	Q8		"		"		"	"
		41								"		"	"	20µA				"	Q9		"		"		"	"
		42								"		"	"			20µA		"	Q10		"		"		"	"
		43								"		"	"				20µA	"	Q11		"		"		"	"
		44	20µA							"		"	"					"	Q12		"		"		"	"
		45		20µA						"		"	"					"	Q13		"		"		"	"
		46			20µA					"		"	"					"	Q14		"		"		"	"
V_{OH5}	3007 4/	47								"	5.2mA	"	"					"	Q1		0.26		0.4		0.26	"
		48							5.2mA	"		"	"					"	Q4		"		"		"	"
		49					5.2mA			"		"	"					"	Q5		"		"		"	"
		50				5.2mA				"		"	"					"	Q6		"		"		"	"
		51						5.2mA		"		"	"					"	Q7		"		"		"	"
		52								"		"	"		5.2mA			"	Q8		"		"		"	"
		53								"		"	"	5.2mA				"	Q9		"		"		"	"
		54								"		"	"			5.2mA		"	Q10		"		"		"	"
		55								"		"	"				5.2mA	"	Q11		"		"		"	"
		56	5.2mA							"		"	"					"	Q12		"		"		"	"
		57		5.2mA						"		"	"					"	Q13		"		"		"	"
		58			5.2mA					"		"	"					"	Q14		"		"		"	"
I_{IH}	3010	59								"		6.0V	GND					6.0V	CLK		0.05		0.1			µA
		60										GND	6.0V					"	CLR		0.05		0.1			"
I_{IL}	3009	61								"		GND	6.0V					"	CLK		-0.05		-0.1			"
		62								"		6.0V	GND					"	CLR		-0.05		-0.1			"

See footnotes at end of table III.

TABLE III. Group A inspection for device type 11 – Continued.

Symbol	MIL-STD-883 method	Case E,F,X	Terminal conditions 1/																Measured terminal	Test limits						Unit
			1	2	3	4	5	6	7	8	9	10	11	12	13	14	15	16		Subgroup 1 T_C = +25°C		Subgroup 2 T_C = +125°C		Subgroup 3 T_C = -55°C		
		2	2	3	4	5	7	8	9	10	12	13	14	15	17	18	19	20								
		Test no.	Q12	Q13	Q14	Q6	Q5	Q7	Q4	GND	Q1	CLK	CLR	Q9	Q8	Q10	Q11	V_{CC}		Min	Max	Min	Max	Min	Max	
I_{OS4}	3011 5/	63								GND	GND	IN	IN					4.0V	Q1	-10	-120	-10	-120	-10	-120	mA
		64							GND	"		"	"					"	Q4	"	"	"	"	"	"	"
		65					GND			"		"	"					"	Q5	"	"	"	"	"	"	"
		66				GND				"		"	"					"	Q6	"	"	"	"	"	"	"
		67						GND		"		"	"					"	Q7	"	"	"	"	"	"	"
		68								"		"	"		GND			"	Q8	"	"	"	"	"	"	"
		69								"		"	"	GND				"	Q9	"	"	"	"	"	"	"
		70								"		"	"			GND		"	Q10	"	"	"	"	"	"	"
		71								"		"	"				GND	"	Q11	"	"	"	"	"	"	"
		72	GND							"		"	"					"	Q12	"	"	"	"	"	"	"
		73		GND						"		"	"					"	Q13	"	"	"	"	"	"	"
		74			GND					"		"	"					"	Q14	"	"	"	"	"	"	"
																				Subgroup 4 T_C = +25°C						
																				Min	Max					
C_C	3012	75								GND		8/						GND	CLK		15					pF
		76								GND			8/					GND	CLR		15					pF
																			Measured terminal 9/	Subgroup 7 T_C = +25°C		Subgroup 8 T_C = +125°C		Subgroup 8 T_C = -55°C		
																				Min	Max	Min	Max	Min	Max	
Truth table tests 29/	3014	77	L	L	L	L	L	L	L	GND	L	GND	4.5V	L	L	L	L	4.5V	Each output							
		78	"	"	"	"	"	"	"	"	"	GND	GND	"	"	"	"	"								
		79	"	"	"	"	"	"	"	"	"	4.5V	"	"	"	"	"	"								
		80	"	"	"	"	"	"	"	"	H	GND	"	"	"	"	"	"								
		81	"	"	"	"	"	"	"	"	H	4.5V	"	"	"	"	"	"								
		82	"	"	"	"	"	"	"	"	L	GND	"	"	"	"	"	"								
		83	X	X	X	X	X	X	X	"	X	PE	"	X	X	X	X	"								
		84	L	L	L	L	L	L		"	H	4.5V	"	L	L	L	L	"								
		85	L	L	L	L	L	L	H	"	L	GND	"	L	L	L	L	"								
		86	X	X	X	X	X	X	X	"	X	PF	"	X	X	X	X	"								
		87	L	L	L	L	L	L	H	"	H	4.5V	"	L	L	L	L	"								
		88	L	L	L	L	H	H	L	"	L	GND	"	L	H	L	L	"								
		89	X	X	X	X	X	X	X	"	X	PG	"	X	X	X	X	"								
		90	L	L	L	L	H	H	H	"	H	4.5V	"	L	H	L	L	"								
		91	L	L	L	H	L	L	L	"	L	GND	"	L	L	L	L	"								
		92	X	X	X	X	X	X	X	"	X	PH	"	X	X	X	X	"								
		93	L	L	L	H	H	H	H	"	H	4.5V	"	L	H	L	L	"								
		94	L	L	L	L	L	L	L	"	L	GND	"	L	L	L	L	"								
		95	X	X	X	X	X	X	X	"	X	PJ	"	X	X	X	X	"								
		96	L	L	L	H	H	H	H	"	H	4.5V	"	L	H	L	L	"								
		97	L	L	L	L	L	L	L	"	L	GND	"	L	L	L	L	"								
		98	X	X	X	X	X	X	X	"	X	PL	"	X	X	X	X	"								
		99	L	L	L	H	H	H	H	"	H	4.5V	"	L	H	L	L	"								
		100	L	L	L	L	L	L	L	"	L	GND	"	H	L	L	L	"								
		101	X	X	X	X	X	X	X	"	X	PM	"	X	X	X	X	"								
		102	L	L	L	H	H	H	H	"	H	4.5V	"	H	H	H	H	"								
		103	L	L	L	L	L	L	L	"	L	GND	"	L	L	L	L	"								
		104	X	X	X	X	X	X	X	"	X	PN	"	X	X	X	X	"								
		105	L	L	L	H	H	H	H	"	H	4.5V	"	H	H	H	H	"								
		106	L	L	L	L	L	L	L	"	L	GND	"	L	L	L	L	"								
		107	X	X	X	X	X	X	X	"	X	PR	"	X	X	X	X	"								
		108	L	L	L	H	H	H	H	"	H	4.5V	"	H	H	H	H	"								
		109	H	L	L	L	L	L	L	"	L	GND	"	L	L	L	L	"								
		110	X	X	X	X	X	X	X	"	X	PS	"	X	X	X	X	"								
		111	H	L	L	H	H	H	H	"	H	4.5V	"	H	H	H	H	"								
		112	L	H	L	L	L	L	L	"	L	GND	"	L	L	L	L	"								
		113	X	X	X	X	X	X	X	"	X	PT	"	X	X	X	X	"								
		114	H	H	L	H	H	H	H	"	H	4.5V	"	H	H	H	H	"								
		115	L	L	H	L	L	L	L	"	L	GND	"	L	L	L	L	"								
		116	X	X	X	X	X	X	X	"	X	PV	"	X	X	X	X	"								
		117	H	H	H	H	H	H	H	"	H	4.5V	"	H	H	H	H	"								
		118	L	L	L	L	L	L	L	"	L	GND	"	L	L	L	L	"								
		119	X	X	X	X	X	X	X	"	X	PY	"	X	X	X	X	"								
		120	H	L	H	H	L	L	H	"	L	GND	"	L	H	H	L	"								
		121	L	"	L	L	"	"	L	"	"	"	4.5V	"	L	L	"	"								

See footnotes at end of table III.

TABLE III. Group A inspection for device type 11 – Continued.

Symbol	MIL-STD-883 method	Case E,F,X	Terminal conditions 1/																Measured terminal	Test limits						Unit
			1	2	3	4	5	6	7	8	9	10	11	12	13	14	15	16		Subgroup 7 T_C = +25°C		Subgroup 8 T_C = +125°C		Subgroup 8 T_C = -55°C		
		2	2	3	4	5	7	8	9	10	12	13	14	15	17	18	19	20								
		Test no.	Q12	Q13	Q14	Q6	Q5	Q7	Q4	GND	Q1	CLK	CLR	Q9	Q8	Q10	Q11	V_{CC}		Min	Max	Min	Max	Min	Max	
Truth table tests 29/	3014	122	L	L	L	L	L	L	L	GND	L	GND	GND	L	L	L	L	4.5V	Each output							
		123	X	X	X	X	X	X	X	"	X	PU	"	X	X	X	X	"								
		124	L	H	L	L	H	H	L	"	H	GND	"	H	L	L	H	"								
		125	"	L	"	"	L	L	"	"	L	"	4.5V	L	"	"	L	"								
		126	"	L	"	"	L	L	"	"	L	"	GND	L	"	"	L	"								
																				Subgroup 9 T_C = +25°C 14/		Subgroup 10 T_C = +125°C		Subgroup 11 T_C = -55°C 14/		
																				Min	Max	Min	Max	Min	Max	
t_{PHL1}	3003 Fig. 4	127								GND	OUT	IN	GND					4.5V	CLK to Q1	5	37	5	49	5	37	ns
		128							OUT	"		"	"					"	CLK to Q4	20	148	20	196	20	148	"
		129					OUT			"		"	"					"	CLK to Q5	25	185	25	245	25	185	"
		130				OUT				"		"	"					"	CLK to Q6	30	222	30	294	30	222	"
		131						OUT		"		"	"					"	CLK to Q7	35	259	35	343	35	259	"
		132								"		"	"		OUT			"	CLK to Q8	40	296	40	392	40	296	"
		133								"		"	"	OUT				"	CLK to Q9	45	333	45	441	45	333	"
		134								"		"	"			OUT		"	CLK to Q10	50	370	50	490	50	370	"
		135								"		"	"				OUT	"	CLK to Q11	55	407	55	539	55	407	"
		136	OUT							"		"	"					"	CLK to Q12	60	444	60	588	60	444	"
		137		OUT						"		"	"					"	CLK to Q13	65	481	65	637	65	481	"
		138			OUT					"		"	"					"	CLK to Q14	70	518	70	686	70	518	"
t_{PLH1}	3003 Fig. 4	139								"	OUT	"	"					"	CLK to Q1	5	37	5	49	5	37	"
		140							OUT	"		"	"					"	CLK to Q4	20	148	20	196	20	148	"
		141					OUT			"		"	"					"	CLK to Q5	25	185	25	245	25	185	"
		142				OUT				"		"	"					"	CLK to Q6	30	222	30	294	30	222	"
		143						OUT		"		"	"					"	CLK to Q7	35	259	35	343	35	259	"
		144								"		"	"		OUT			"	CLK to Q8	40	296	40	392	40	296	"
		145								"		"	"	OUT				"	CLK to Q9	45	333	45	441	45	333	"
		146								"		"	"			OUT		"	CLK to Q10	50	370	50	490	50	370	"
		147								"		"	"				OUT	"	CLK to Q11	55	407	55	539	55	407	"
		148	OUT							"		"	"					"	CLK to Q12	60	444	60	588	60	444	"
		149		OUT						"		"	"					"	CLK to Q13	65	481	65	637	65	481	"
		150			OUT					"		"	"					"	CLK to Q14	70	518	70	686	70	518	"
t_{PLH11}	3003 Fig. 4	151								"	IN	"	"					"	Q1 to Q4	4	22	4	29	4	22	"
		152					OUT		OUT	"		"	"					"	Q4 to Q5	"	"	"	"	"	"	"
		153				OUT	IN		IN	"		"	"					"	Q5 to Q6	"	"	"	"	"	"	"
		154				IN		OUT		"		"	"					"	Q6 to Q7	"	"	"	"	"	"	"
		155						IN		"		"	"		OUT			"	Q7 to Q8	"	"	"	"	"	"	"
		156								"		"	"	OUT	IN			"	Q8 to Q9	"	"	"	"	"	"	"
		157								"		"	"	IN		OUT		"	Q9 to Q10	"	"	"	"	"	"	"
		158								"		"	"			IN	OUT	"	Q10 to Q11	"	"	"	"	"	"	"
		159	OUT							"		"	"				IN	"	Q11 to Q12	"	"	"	"	"	"	"
		160	IN	OUT						"		"	"					"	Q12 to Q13	"	"	"	"	"	"	"
		161		IN	OUT					"		"	"					"	Q13 to Q14	"	"	"	"	"	"	"
t_{PHL11}	3003 Fig. 4	162								"	IN	"	"					"	Q1 to Q4	"	"	"	"	"	"	"
		163					OUT		OUT	"		"	"					"	Q4 to Q5	"	"	"	"	"	"	"
		164				OUT	IN		IN	"		"	"					"	Q5 to Q6	"	"	"	"	"	"	"
		165				IN		OUT		"		"	"					"	Q6 to Q7	"	"	"	"	"	"	"
		166						IN		"		"	"		OUT			"	Q7 to Q8	"	"	"	"	"	"	"
		167								"		"	"	OUT	IN			"	Q8 to Q9	"	"	"	"	"	"	"
		168								"		"	"	IN		OUT		"	Q9 to Q10	"	"	"	"	"	"	"
		169								"		"	"			IN	OUT	"	Q10 to Q11	"	"	"	"	"	"	"
		170	OUT							"		"	"				IN	"	Q11 to Q12	"	"	"	"	"	"	"
		171	IN	OUT						"		"	"					"	Q12 to Q13	"	"	"	"	"	"	"
		172		IN	OUT					"		"	"					"	Q13 to Q14	"	"	"	"	"	"	"

See footnotes at end of table III.

TABLE III. Group A inspection for device type 11 – Continued.

Symbol	MIL-STD-883 method	Case E,F,X	Terminal conditions 1/																Measured terminal	Test limits						Unit
			1	2	3	4	5	6	7	8	9	10	11	12	13	14	15	16		Subgroup 9 T_C = +25°C 14/		Subgroup 10 T_C = +125°C		Subgroup 11 T_C = -55°C 14/		
		2	2	3	4	5	7	8	9	10	12	13	14	15	17	18	19	20								
		Test no.	Q12	Q13	Q14	Q6	Q5	Q7	Q4	GND	Q1	CLK	CLR	Q9	Q8	Q10	Q11	V_{CC}		Min	Max	Min	Max	Min	Max	
t_{PHL9}	3003 Fig. 4	173								GND	OUT	IN	IN					4.5V	CLR to Q1	6	42	6	56	6	42	ns
		174							OUT	"		"	"					"	CLR to Q4	"	"	"	"	"	"	"
		175					OUT			"		"	"					"	CLR to Q5	"	"	"	"	"	"	"
		176				OUT				"		"	"					"	CLR to Q6	"	"	"	"	"	"	"
		177						OUT		"		"	"					"	CLR to Q7	"	"	"	"	"	"	"
		178								"		"	"		OUT			"	CLR to Q8	"	"	"	"	"	"	"
		179								"		"	"	OUT				"	CLR to Q9	"	"	"	"	"	"	"
		180								"		"	"			OUT		"	CLR to Q10	"	"	"	"	"	"	"
		181								"		"	"				OUT	"	CLR to Q11	"	"	"	"	"	"	"
		182	OUT							"		"	"					"	CLR to Q12	"	"	"	"	"	"	"
		183		OUT						"		"	"					"	CLR to Q13	"	"	"	"	"	"	"
		184			OUT					"		"	"					"	CLR to Q14	"	"	"	"	"	"	"
t_{THL}	3004 Fig. 4	185								"	OUT	"	GND					"	Q1	3	15	3	20	3	15	"
		186							OUT	"		"	"					"	Q4	"	"	"	"	"	"	"
		187					OUT			"		"	"					"	Q5	"	"	"	"	"	"	"
		188				OUT				"		"	"					"	Q6	"	"	"	"	"	"	"
		189						OUT		"		"	"					"	Q7	"	"	"	"	"	"	"
		190								"		"	"		OUT			"	Q8	"	"	"	"	"	"	"
		191								"		"	"	OUT				"	Q9	"	"	"	"	"	"	"
		192								"		"	"			OUT		"	Q10	"	"	"	"	"	"	"
		193								"		"	"				OUT	"	Q11	"	"	"	"	"	"	"
		194	OUT							"		"	"					"	Q12	"	"	"	"	"	"	"
		195		OUT						"		"	"					"	Q13	"	"	"	"	"	"	"
		196			OUT					"		"	"					"	Q14	"	"	"	"	"	"	"
t_{TLH}	3004 Fig. 4	197								"	OUT	"	"					"	Q1	"	"	"	"	"	"	"
		198							OUT	"		"	"					"	Q4	"	"	"	"	"	"	"
		199					OUT			"		"	"					"	Q5	"	"	"	"	"	"	"
		200				OUT				"		"	"					"	Q6	"	"	"	"	"	"	"
		201						OUT		"		"	"					"	Q7	"	"	"	"	"	"	"
		202								"		"	"		OUT			"	Q8	"	"	"	"	"	"	"
		203								"		"	"	OUT				"	Q9	"	"	"	"	"	"	"
		204								"		"	"			OUT		"	Q10	"	"	"	"	"	"	"
		205								"		"	"				OUT	"	Q11	"	"	"	"	"	"	"
		206	OUT							"		"	"					"	Q12	"	"	"	"	"	"	"
		207		OUT						"		"	"					"	Q13	"	"	"	"	"	"	"
		208			OUT					"		"	"					"	Q14	"	"	"	"	"	"	"
f_{MAX}	Fig. 4	209								"	OUT	"	"					"	Q1	28		21		28		MHz

See footnotes at end of table III.

TABLE III. Group A inspection for device type 12.

Symbol	MIL-STD-883 method	Case C,D 2	Terminal conditions 1/ 1	2	3	4	5	6	7	8	9	10	11	12	13	14	Measured terminal	Test limits Subgroup 1 T_C = +25°C Min	Max	Subgroup 2 T_C = +125°C Min	Max	Subgroup 3 T_C = -55°C Min	Max	Unit
		2	2	3	4	6	8	9	10	11	13	14	16	18	19	20								
		Test no.	CLK	CLR	Q7	Q6	Q5	Q4	GND	NC	Q3	NC	Q2	Q1	NC	V_{CC}								
$V_{IC(pos)}$		1	1mA						1/							GND	CLK		1.5					V
		2		1mA					1/							GND	CLR		1.5					"
$V_{IC(neg)}$		3	-1mA						GND							1/	CLK		-1.5					"
		4		-1mA					"							1/	CLR		-1.5					"
I_{CCH}	3005	5	GND	6.0V					"							6.0V	V_{CC}		0.2		20			µA
I_{CCL}		6	GND	GND					"							"	V_{CC}		0.2		20			µA
I_{CCL} 29/		7	PI	"					"							"	None							
I_{CCL}		8	GND	"					"							"	V_{CC}		0.2		20			µA
I_{CCL} 29/		9	PI	"					"							"	None							
I_{CCH}		10	6.0V	"					"							"	V_{CC}		0.2		20			µA
V_{OH3}	3006 2/	11	IN	IN					"					-20µA		"	Q1	5.95		5.95		5.95		V
		12	"	"					"				-20µA			"	Q2	"		"		"		"
		13	"	"					"		-20µA					"	Q3	"		"		"		"
		14	"	"				-20µA	"							"	Q4	"		"		"		"
		15	"	"			-20µA		"							"	Q5	"		"		"		"
		16	"	"		-20µA			"							"	Q6	"		"		"		"
		17	"	"	-20µA				"							"	Q7	"		"		"		"
V_{OH5}	3006 2/	18	"	"					"					-5.2mA		"	Q1	5.48		5.2		5.48		"
		19	"	"					"				-5.2mA			"	Q2	"		"		"		"
		20	"	"					"		-5.2mA					"	Q3	"		"		"		"
		21	"	"				-5.2mA	"							"	Q4	"		"		"		"
		22	"	"			-5.2mA		"							"	Q5	"		"		"		"
		23	"	"		-5.2mA			"							"	Q6	"		"		"		"
		24	"	"	-5.2mA				"							"	Q7	"		"		"		"
V_{OL3}	3007 4/	25	"	"					"					20µA		"	Q1		0.05		0.05		0.05	"
		26	"	"					"				20µA			"	Q2		"		"		"	"
		27	"	"					"		20µA					"	Q3		"		"		"	"
		28	"	"				20µA	"							"	Q4		"		"		"	"
		29	"	"			20µA		"							"	Q5		"		"		"	"
		30	"	"		20µA			"							"	Q6		"		"		"	"
		31	"	"	20µA				"							"	Q7		"		"		"	"
V_{OL5}	3007 4/	32	"	"					"					5.2mA		"	Q1		0.26		0.4		0.26	"
		33	"	"					"				5.2mA			"	Q2		"		"		"	"
		34	"	"					"		5.2mA					"	Q3		"		"		"	"
		35	"	"				5.2mA	"							"	Q4		"		"		"	"
		36	"	"			5.2mA		"							"	Q5		"		"		"	"
		37	"	"		5.2mA			"							"	Q6		"		"		"	"
		38	"	"	5.2mA				"							"	Q7		"		"		"	"
I_{IH}	3010	39	6.0V	GND					"							"	CLK		0.05		0.1			µA
		40	GND	6.0V					"							"	CLR		0.05		0.1			"
I_{IL}	3009	41	GND	6.0V					"							"	CLK		-0.05		-0.1			"
		42	6.0V	GND					"							"	CLR		-0.05		-0.1			"
I_{OS4} 5/	3011	43	IN	IN					"					GND		4.0V	Q1	-10	-120	-10	-120	-10	-120	mA
		44	"	"					"				GND			"	Q2	"	"	"	"	"	"	"
		45	"	"					"		GND					"	Q3	"	"	"	"	"	"	"
		46	"	"				GND	"							"	Q4	"	"	"	"	"	"	"
		47	"	"			GND		"							"	Q5	"	"	"	"	"	"	"
		48	"	"		GND			"							"	Q6	"	"	"	"	"	"	"
		49	"	"	GND				"							"	Q7	"	"	"	"	"	"	"
																		Subgroup 4 T_C = +25°C Min	Max					
C_C	3012	50	8/						GND							GND	CLK		15					pF
		51		8/					GND							GND	CLR		15					pF

See footnotes at end of table III.

TABLE III. Group A inspection for device type 12 – Continued.

Symbol	MIL-STD-883 method	Case C,D 2	Terminal conditions 1/														Measured terminal 9/	Test limits						Unit
			1	2	3	4	5	6	7	8	9	10	11	12	13	14		Subgroup 7 T_C = +25°C		Subgroup 8 T_C = +125°C		Subgroup 8 T_C = -55°C		
			2	3	4	6	8	9	10	11	13	14	16	18	19	20								
		Test no.	CLK	CLR	Q7	Q6	Q5	Q4	GND	NC	Q3	NC	Q2	Q1	NC	V_{CC}		Min	Max	Min	Max	Min	Max	
Truth table tests 17/	3014	52	GND	4.5V	L	L	L	L	GND		L		L	L		4.5V	Each output							
		53	GND	GND	“	“	“	“	“		“		“	“		“								
		54	4.5V	“	“	“	“	“	“		“		“	“		“								
		55	GND	“	“	“	“	“	“		“		“	H		“								
		56	4.5V	“	“	“	“	“	“		“		“	H		“								
		57	GND	“	“	“	“	“	“		“		H	L		“								
		58	4.5V	“	“	“	“	“	“		“		“	L		“								
		59	GND	“	“	“	“	“	“		“		“	H		“								
		60	4.5V	“	“	“	“	“	“		“		“	H		“								
		61	GND	“	“	“	“	“	“		H		L	L		“								
		62	PC	“	X	X	X	X	“		X		X	X		“								
		63	4.5V	“	L	L	L	L	“		H		H	H		“								
		64	GND	“	L	L	L	H	“		L		L	L		“								
		65	PF	“	X	X	X	X	“		X		X	X		“								
		66	4.5V	“	L	L	L	H	“		H		H	H		“								
		67	GND	“	L	L	H	L	“		L		L	L		“								
		68	PG	“	X	X	X	X	“		X		X	X		“								
		69	4.5V	“	L	L	H	H	“		H		H	H		“								
		70	GND	“	L	H	L	L	“		L		L	L		“								
		71	PH	“	X	X	X	X	“		X		X	X		“								
		72	4.5V	“	L	H	H	H	“		H		H	H		“								
		73	GND	“	H	L	L	L	“		L		L	L		“								
		74	PJ	“	X	X	X	X	“		X		X	X		“								
		75	4.5V	“	H	H	H	H	“		H		H	H		“								
		76	GND	“	L	L	L	L	“		L		L	L		“								
		77	PI	“	X	X	X	X	“		X		X	X		“								
		78	GND	“	L	H	L	H	“		L		H	L		“								
		79	“	4.5V	“	L	“	L	“		“		L	“		“								
		80	“	GND	“	L	“	L	“		“		L	“		“								
		81	PK	“	X	X	X	X	“		X		X	X		“								
		82	GND	“	H	L	H	L	“		H		L	H		“								
		83	“	4.5V	L	“	L	“	“		L		“	L		“								
		84	“	GND	L	“	L	“	“		L		“	L		“								
																	Measured terminal	Subgroup 9 T_C = +25°C 14/		Subgroup 10 T_C = +125°C		Subgroup 11 T_C = -55°C 14/		
																		Min	Max	Min	Max	Min	Max	
t_{PHL1}	3003 Fig. 4	85	IN	GND					GND					OUT		4.5V	CLK to Q1	5	37	5	49	5	37	ns
		86	“	“					“				OUT			“	CLK to Q2	10	74	10	98	10	74	“
		87	“	“					“		OUT					“	CLK to Q3	15	111	15	147	15	111	“
		88	“	“				OUT	“							“	CLK to Q4	20	148	20	196	20	148	“
		89	“	“			OUT		“							“	CLK to Q5	25	185	25	245	25	185	“
		90	“	“		OUT			“							“	CLK to Q6	30	222	30	294	30	222	“
		91	“	“	OUT				“							“	CLK to Q7	35	259	35	343	35	259	“
t_{PLH1}	3003 Fig. 4	92	“	“					“					OUT		“	CLK to Q1	5	37	5	49	5	37	“
		93	“	“					“				OUT			“	CLK to Q2	10	74	10	98	10	74	“
		94	“	“					“		OUT					“	CLK to Q3	15	111	15	147	15	111	“
		95	“	“				OUT	“							“	CLK to Q4	20	148	20	196	20	148	“
		96	“	“			OUT		“							“	CLK to Q5	25	185	25	245	25	185	“
		97	“	“		OUT			“							“	CLK to Q6	30	222	30	294	30	222	“
		98	“	“	OUT				“							“	CLK to Q7	35	259	35	343	35	259	“
t_{PHL11}	3003 Fig. 4	99	“	“					“				OUT	IN		“	Q1 to Q2	4	22	4	29	4	22	“
		100	“	“					“		OUT		IN			“	Q2 to Q3	“	“	“	“	“	“	“
		101	“	“				OUT	“		IN					“	Q3 to Q4	“	“	“	“	“	“	“
		102	“	“			OUT	IN	“							“	Q4 to Q5	“	“	“	“	“	“	“
		103	“	“		OUT	IN		“							“	Q5 to Q6	“	“	“	“	“	“	“
		104	“	“	OUT	IN			“							“	Q6 to Q7	“	“	“	“	“	“	“
t_{PLH11}	3003 Fig. 4	105	“	“					“				OUT	IN		“	Q1 to Q2	“	“	“	“	“	“	“
		106	“	“					“		OUT		IN			“	Q2 to Q3	“	“	“	“	“	“	“
		107	“	“				OUT	“		IN					“	Q3 to Q4	“	“	“	“	“	“	“
		108	“	“			OUT	IN	“							“	Q4 to Q5	“	“	“	“	“	“	“
		109	“	“		OUT	IN		“							“	Q5 to Q6	“	“	“	“	“	“	“
		110	“	“	OUT	IN			“							“	Q6 to Q7	“	“	“	“	“	“	“

See footnotes at end of table III.

TABLE III. Group A inspection for device type 12 – Continued.

Symbol	MIL-STD-883 method	Case C,D 2	Terminal conditions 1/ 1	2	3	4	5	6	7	8	9	10	11	12	13	14	Measured terminal	Test limits Subgroup 9 T_C = +25°C 14/		Subgroup 10 T_C = +125°C		Subgroup 11 T_C = -55°C 14/		Unit
			2	3	4	6	8	9	10	11	13	14	16	18	19	20								
		Test no.	CLK	CLR	Q7	Q6	Q5	Q4	GND	NC	Q3	NC	Q2	Q1	NC	V_{CC}		Min	Max	Min	Max	Min	Max	
t_{PHL9}	3003 Fig. 4	111	IN	IN					GND					OUT		4.5V	CLR to Q1	5	37	5	49	5	37	ns
		112	"	"					"				OUT			"	CLR to Q2	"	"	"	"	"	"	"
		113	"	"					"		OUT					"	CLR to Q3	"	"	"	"	"	"	"
		114	"	"				OUT	"							"	CLR to Q4	"	"	"	"	"	"	"
		115	"	"			OUT		"							"	CLR to Q5	"	"	"	"	"	"	"
		116	"	"		OUT			"							"	CLR to Q6	"	"	"	"	"	"	"
		117	"	"	OUT				"							"	CLR to Q7	"	"	"	"	"	"	"
t_{THL}	3004 Fig. 4	118	"	GND					"					OUT		"	Q1	3	15	3	20	3	15	"
		119	"	"					"				OUT			"	Q2	"	"	"	"	"	"	"
		120	"	"					"		OUT					"	Q3	"	"	"	"	"	"	"
		121	"	"				OUT	"							"	Q4	"	"	"	"	"	"	"
		122	"	"			OUT		"							"	Q5	"	"	"	"	"	"	"
		123	"	"		OUT			"							"	Q6	"	"	"	"	"	"	"
		124	"	"	OUT				"							"	Q7	"	"	"	"	"	"	"
t_{TLH}	3004 Fig. 4	125	"	"					"					OUT		"	Q1	"	"	"	"	"	"	"
		126	"	"					"				OUT			"	Q2	"	"	"	"	"	"	"
		127	"	"					"		OUT					"	Q3	"	"	"	"	"	"	"
		128	"	"				OUT	"							"	Q4	"	"	"	"	"	"	"
		129	"	"			OUT		"							"	Q5	"	"	"	"	"	"	"
		130	"	"		OUT			"							"	Q6	"	"	"	"	"	"	"
		131	"	"	OUT				"							"	Q7	"	"	"	"	"	"	"
f_{MAX} 15/	Fig. 4	132	"	"					"					OUT			Q1	28		21		28		MHz

See footnotes at end of table III.

TABLE III. Group A inspection for device type 13.

Symbol	MIL-STD-883 method	Case E,F,X	Terminal conditions 1/ 1	2	3	4	5	6	7	8	9	10	11	12	13	14	15	16	Measured terminal	Test limits Subgroup 1 T_C = +25°C Min	Subgroup 1 Max	Subgroup 2 T_C = +125°C Min	Subgroup 2 Max	Subgroup 3 T_C = -55°C Min	Subgroup 3 Max	Unit
		2	2	3	4	5	7	8	9	10	12	13	14	15	17	18	19	20								
		Test no.	Q12	Q6	Q5	Q7	Q4	Q3	Q2	GND	Q1	CLK	CLR	Q9	Q8	Q10	Q11	V_{CC}								
$V_{IC(pos)}$		1								1/		1mA						GND	CLK		1.5					V
		2								1/			1mA					GND	CLR		1.5					"
$V_{IC(neg)}$		3								GND		-1mA						1/	CLK		-1.5					"
		4								"			-1mA					1/	CLR		-1.5					"
I_{CCH}	3005	5								"		GND	6.0V					6.0V	V_{CC}		0.2		20			µA
I_{CCL}		6								"		GND	GND					"	V_{CC}		0.2		20			µA
I_{CCL} 29/		7								"		PS	"					"	None							
I_{CCL}		8								"		GND	"					"	V_{CC}		0.2		20			µA
I_{CCL} 29/		9								"		PS	"					"	None							
I_{CCH}		10								"		6.0V	"					"	V_{CC}		0.2		20			µA
V_{OH3}	3006 2/	11								"	-20µA	IN	IN					"	Q1	5.95		5.95		5.95		V
		12							-20µA	"		"	"					"	Q2	"		"		"		"
		13						-20µA		"		"	"					"	Q3	"		"		"		"
		14					-20µA			"		"	"					"	Q4	"		"		"		"
		15			-20µA					"		"	"					"	Q5	"		"		"		"
		16		-20µA						"		"	"					"	Q6	"		"		"		"
		17				-20µA				"		"	"					"	Q7	"		"		"		"
		18								"		"	"		-20µA			"	Q8	"		"		"		"
		19								"		"	"	-20µA				"	Q9	"		"		"		"
		20								"		"	"			-20µA		"	Q10	"		"		"		"
		21								"		"	"				-20µA	"	Q11	"		"		"		"
		22	-20µA							"		"	"					"	Q12	"		"		"		"
V_{OH5}	3006 2/	23								"	-5.2mA	"	"					"	Q1	5.48		5.2		5.48		"
		24							-5.2mA	"		"	"					"	Q2	"		"		"		"
		25						-5.2mA		"		"	"					"	Q3	"		"		"		"
		26					-5.2mA			"		"	"					"	Q4	"		"		"		"
		27			-5.2mA					"		"	"					"	Q5	"		"		"		"
		28		-5.2mA						"		"	"					"	Q6	"		"		"		"
		29				-5.2mA				"		"	"					"	Q7	"		"		"		"
		30								"		"	"		-5.2mA			"	Q8	"		"		"		"
		31								"		"	"	-5.2mA				"	Q9	"		"		"		"
		32								"		"	"			-5.2mA		"	Q10	"		"		"		"
		33								"		"	"				-5.2mA	"	Q11	"		"		"		"
		34	-5.2mA							"		"	"					"	Q12	"		"		"		"
V_{OL3}	3007 4/	35								"	20µA	"	"					"	Q1		0.05		0.05		0.05	"
		36							20µA	"		"	"					"	Q2		"		"		"	"
		37						20µA		"		"	"					"	Q3		"		"		"	"
		38					20µA			"		"	"					"	Q4		"		"		"	"
		39			20µA					"		"	"					"	Q5		"		"		"	"
		40		20µA						"		"	"					"	Q6		"		"		"	"
		41				20µA				"		"	"					"	Q7		"		"		"	"
		42								"		"	"		20µA			"	Q8		"		"		"	"
		43								"		"	"	20µA				"	Q9		"		"		"	"
		44								"		"	"			20µA		"	Q10		"		"		"	"
		45								"		"	"				20µA	"	Q11		"		"		"	"
		46	20µA							"		"	"					"	Q12		"		"		"	"
V_{OL5}	3007 4/	47								"	5.2mA	"	"					"	Q1		0.26		0.4		0.26	"
		48							5.2mA	"		"	"					"	Q2		"		"		"	"
		49						5.2mA		"		"	"					"	Q3		"		"		"	"
		50					5.2mA			"		"	"					"	Q4		"		"		"	"
		51			5.2mA					"		"	"					"	Q5		"		"		"	"
		52		5.2mA						"		"	"					"	Q6		"		"		"	"
		53				5.2mA				"		"	"					"	Q7		"		"		"	"
		54								"		"	"		5.2mA			"	Q8		"		"		"	"
		55								"		"	"	5.2mA				"	Q9		"		"		"	"
		56								"		"	"			5.2mA		"	Q10		"		"		"	"
		57								"		"	"				5.2mA	"	Q11		"		"		"	"
		58	5.2mA							"		"	"					"	Q12		"		"		"	"
I_{IH}	3010	59								"		6.0V	GND					6.0V	CLK		0.05		0.1			µA
		60								"		GND	6.0V					"	CLR		0.05		0.1			"
I_{IL}	3009	61								"		GND	6.0V					"	CLK		-0.05		-0.1			"
		62								"		6.0V	GND					"	CLR		-0.05		-0.1			"

See footnotes at end of table III.

TABLE III. Group A inspection for device type 13 – Continued.

Symbol	MIL-STD-883 method	Case E,F,X 2	Terminal conditions 1/ 1	2	3	4	5	6	7	8	9	10	11	12	13	14	15	16	Measured terminal	Test limits Subgroup 1 T_C = +25°C Min	Subgroup 1 Max	Subgroup 2 T_C = +125°C Min	Subgroup 2 Max	Subgroup 3 T_C = -55°C Min	Subgroup 3 Max	Unit
		Test no.	Q12	Q6	Q5	Q7	Q4	Q3	Q2	GND	Q1	CLK	CLR	Q9	Q8	Q10	Q11	V_{CC}								
I_{OS4}	3011	63								GND	GND	IN	IN					4.0V	Q1	-10	-120	-10	-120	-10	-120	mA
		64								"		"	"					"	Q2	"	"	"	"	"	"	"
		65								"		"	"					"	Q3	"	"	"	"	"	"	"
		66								"		"	"					"	Q4	"	"	"	"	"	"	"
		67								"		"	"					"	Q5	"	"	"	"	"	"	"
		68								"		"	"					"	Q6	"	"	"	"	"	"	"
		69								"		"	"					"	Q7	"	"	"	"	"	"	"
		70								"		"	"					"	Q8	"	"	"	"	"	"	"
		71								"		"	"					"	Q9	"	"	"	"	"	"	"
		72								"		"	"					"	Q10	"	"	"	"	"	"	"
		73								"		"	"					"	Q11	"	"	"	"	"	"	"
		74								"		"	"					"	Q12	"	"	"	"	"	"	"
																				Subgroup 4 T_C = +25°C Min	Subgroup 4 Max					
C_C	3012	75								GND		8/						GND	CLK		15					pF
		76								GND			8/					GND	CLR		15					pF
																			Measured terminal 9/	Subgroup 7 T_C = +25°C Min	Subgroup 7 Max	Subgroup 8 T_C = +125°C Min	Subgroup 8 Max	Subgroup 8 T_C = -55°C Min	Subgroup 8 Max	
Truth table tests 29/	3014	77	L	L	L	L	L	L	L	GND	L	GND	4.5V	L	L	L	L	4.5V	Each output							
		78	"	"	"	"	"	"	"	"	"	GND	GND	"	"	"	"	"								
		79	"	"	"	"	"	"	"	"	"	4.5V	"	"	"	"	"	"								
		80	"	"	"	"	"	"	"	"	H	GND	"	"	"	"	"	"								
		81	"	"	"	"	"	"	"	"	H	4.5V	"	"	"	"	"	"								
		82	"	"	"	"	"	"	H	"	L	GND	"	"	"	"	"	"								
		83	X	X	X	X	X	X	X	"	X	PA	"	X	X	X	X	"								
		84	L	L	L	L	L	L		"	H	4.5V	"	L	L	L	L	"								
		85	L	L	L	L	L	H	L	"	L	GND	"	L	L	L	L	"								
		86	X	X	X	X	X	X	X	"	X	PC	"	X	X	X	X	"								
		87	L	L	L	L	L	H	H	"	H	4.5V	"	L	L	L	L	"								
		88	L	L	L	L	H	L	L	"	L	GND	"	L	L	L	L	"								
		89	X	X	X	X	X	X	X	"	X	PF	"	X	X	X	X	"								
		90	L	L	L	L	H	H	H	"	H	4.5V	"	L	L	L	L	"								
		91	L	L	H	L	L	L	L	"	L	GND	"	L	L	L	L	"								
		92	X	X	X	X	X	X	X	"	X	PG	"	X	X	X	X	"								
		93	L	L	H	L	H	H	H	"	H	4.5V	"	L	L	L	L	"								
		94	L	H	L	L	L	L	L	"	L	GND	"	L	L	L	L	"								
		95	X	X	X	X	X	X	X	"	X	PH	"	X	X	X	X	"								
		96	L	H	H	H	H	H	H	"	H	4.5V	"	L	L	L	L	"								
		97	L	L	L	H	L	L	L	"	L	GND	"	L	L	L	L	"								
		98	X	X	X	X	X	X	X	"	X	PJ	"	X	X	X	X	"								
		99	L	H	H	H	H	H	H	"	H	4.5V	"	L	L	L	L	"								
		100	L	L	L	L	L	L	L	"	L	GND	"	L	L	H	L	"								
		101	X	X	X	X	X	X	X	"	X	PL	"	X	X	X	X	"								
		102	L	H	H	H	H	H	H	"	H	4.5V	"	L	L	L	L	"								
		103	L	L	L	L	L	L	L	"	L	GND	"	H	H	L	L	"								
		104	X	X	X	X	X	X	X	"	X	PM	"	X	X	X	X	"								
		105	L	H	H	H	H	H	H	"	H	4.5V	GND	H	H	L	L	"								
		106	L	L	L	L	L	L	L	"	L	GND	"	L	L	H	L	"								
		107	X	X	X	X	X	X	X	"	X	PN	"	X	X	X	X	"								
		108	L	H	H	H	H	H	H	"	H	4.5V	"	H	H	H	L	"								
		109	L	L	L	L	L	L	L	"	L	GND	"	L	L	L	H	"								
		110	X	X	X	X	X	X	X	"	X	PR	"	X	X	X	X	"								
		111	L	H	H	H	H	H	H	"	H	4.5V	"	H	H	H	H	"								
		112	H	L	L	L	L	L	L	"	L	GND	"	L	L	L	L	"								
		113	X	X	X	X	X	X	X	"	X	PS	"	X	X	X	X	"								
		114	H	H	H	H	H	H	H	"	H	4.5V	"	H	H	H	H	"								
		115	L	L	L	L	L	L	L	"	L	GND	"	L	L	L	L	"								
		116	X	X	X	X	X	X	X	"	X	PY	"	X	X	X	X	"								
		117	H	H	L	L	H	L	H	"	L	GND	"	L	L	H	L	"								
		118	L	L	"	"	L	"	L	"	"	"	4.5V	"	L	L	L	"								
		119	L	L	"	"	L	"	L	"	"	"	GND	"	L	L	L	"								
		120	X	X	X	X	X	X	X	"	X	PU	"	X	X	X	X	"								
		121	L	L	H	H	L	H	L	"	H	GND	"	H	L	L	H	"								
		122	"	"	L	L	"	L	"	"	L	"	4.5V	L	"	"	L	"								
		123	"	"	L	L	"	L	"	"	L	"	GND	L	"	"	L	"								

See footnotes at end of table III.

TABLE III. Group A inspection for device type 13 – Continued.

Symbol	MIL-STD-883 method	Case E,F,X 2	Terminal conditions 1/ 1 2	2 3	3 4	4 5	5 7	6 8	7 9	8 10	9 12	10 13	11 14	12 15	13 17	14 18	15 19	16 20	Measured terminal 9/	Test limits Subgroup 9 T_C = +25°C 14/ Min	Subgroup 9 Max	Subgroup 10 T_C = +125°C Min	Subgroup 10 Max	Subgroup 11 T_C = -55°C 14/ Min	Subgroup 11 Max	Unit
		Test no.	Q12	Q6	Q5	Q7	Q4	Q3	Q2	GND	Q1	CLK	CLR	Q9	Q8	Q10	Q11	V_{CC}								
t_{PHL1}	3003 Fig. 4	124								GND	OUT	IN	GND					4.5V	CLK to Q1	5	37	5	49	5	37	ns
		125							OUT	"		"	"					"	CLK to Q2	10	74	10	98	10	74	"
		126						OUT		"		"	"					"	CLK to Q3	15	111	15	147	15	111	"
		127					OUT			"		"	"					"	CLK to Q4	20	148	20	196	20	148	"
		128			OUT					"		"	"					"	CLK to Q5	25	185	25	245	25	185	"
		129		OUT						"		"	"					"	CLK to Q6	30	222	30	294	30	222	"
		130				OUT				"		"	"					"	CLK to Q7	35	259	35	343	35	259	"
		131								"		"	"		OUT			"	CLK to Q8	40	296	40	392	40	296	"
		132								"		"	"	OUT				"	CLK to Q9	45	333	45	441	45	333	"
		133								"		"	"			OUT		"	CLK to Q10	50	370	50	490	50	370	"
		134								"		"	"				OUT	"	CLK to Q11	55	407	55	539	55	407	"
		135	OUT							"		"	"					"	CLK to Q12	60	444	60	588	60	444	"
t_{PLH1}	3003 Fig. 4	136								"	OUT	"	"					"	CLK to Q1	5	37	5	49	5	37	"
		137							OUT	"		"	"					"	CLK to Q2	10	74	10	98	10	74	"
		138						OUT		"		"	"					"	CLK to Q3	15	111	15	147	15	111	"
		139					OUT			"		"	"					"	CLK to Q4	20	148	20	196	20	148	"
		140			OUT					"		"	"					"	CLK to Q5	25	185	25	245	25	185	"
		141		OUT						"		"	"					"	CLK to Q6	30	222	30	294	30	222	"
		142				OUT				"		"	"					"	CLK to Q7	35	259	35	343	35	259	"
		143								"		"	"		OUT			"	CLK to Q8	40	296	40	392	40	296	"
		144								"		"	"	OUT				"	CLK to Q9	45	333	45	441	45	333	"
		145								"		"	"			OUT		"	CLK to Q10	50	370	50	490	50	370	"
		146								"		"	"				OUT	"	CLK to Q11	55	407	55	539	55	407	"
		147	OUT							"		"	"					"	CLK to Q12	60	444	60	588	60	444	"
t_{PHL11}	3003 Fig. 4	148							OUT	"	IN	"	"					"	Q1 to Q2	4	22	4	29	4	22	"
		149						OUT	IN	"		"	"					"	Q2 to Q3	"	"	"	"	"	"	"
		150					OUT	IN		"		"	"					"	Q3 to Q4	"	"	"	"	"	"	"
		151			OUT		IN			"		"	"					"	Q4 to Q5	"	"	"	"	"	"	"
		152		OUT	IN					"		"	"					"	Q5 to Q6	"	"	"	"	"	"	"
		153		IN		OUT				"		"	"					"	Q6 to Q7	"	"	"	"	"	"	"
		154				IN				"		"	"		OUT			"	Q7 to Q8	"	"	"	"	"	"	"
		155								"		"	"	OUT	IN			"	Q8 to Q9	"	"	"	"	"	"	"
		156								"		"	"	IN		OUT		"	Q9 to Q10	"	"	"	"	"	"	"
		157								"		"	"			IN	OUT	"	Q10 to Q11	"	"	"	"	"	"	"
		158	OUT							"		"	"				IN	"	Q11 to Q12	"	"	"	"	"	"	"
t_{PLH11}	3003 Fig. 4	159							OUT	"	IN	"	"					"	Q1 to Q2	"	"	"	"	"	"	"
		160						OUT	IN	"		"	"					"	Q2 to Q3	"	"	"	"	"	"	"
		161					OUT	IN		"		"	"					"	Q3 to Q4	"	"	"	"	"	"	"
		162			OUT		IN			"		"	"					"	Q4 to Q5	"	"	"	"	"	"	"
		163		OUT	IN					"		"	"					"	Q5 to Q6	"	"	"	"	"	"	"
		164		IN		OUT				"		"	"					"	Q6 to Q7	"	"	"	"	"	"	"
		165				IN				"		"	"		OUT			"	Q7 to Q8	"	"	"	"	"	"	"
		166								"		"	"	OUT	IN			"	Q8 to Q9	"	"	"	"	"	"	"
		167								"		"	"	IN		OUT		"	Q9 to Q10	"	"	"	"	"	"	"
		168								"		"	"			IN	OUT	"	Q10 to Q11	"	"	"	"	"	"	"
		169	OUT							"		"	"				IN	"	Q11 to Q12	"	"	"	"	"	"	"
t_{PHL9}	3003 Fig. 4	170								"	OUT	"	IN					"	CLR to Q1	6	42	6	56	6	42	"
		171							OUT	"		"	"					"	CLR to Q2	"	"	"	"	"	"	"
		172						OUT		"		"	"					"	CLR to Q3	"	"	"	"	"	"	"
		173					OUT			"		"	"					"	CLR to Q4	"	"	"	"	"	"	"
		174			OUT					"		"	"					"	CLR to Q5	"	"	"	"	"	"	"
		175		OUT						"		"	"					"	CLR to Q6	"	"	"	"	"	"	"
		176				OUT				"		"	"					"	CLR to Q7	"	"	"	"	"	"	"
		177								"		"	"		OUT			"	CLR to Q8	"	"	"	"	"	"	"
		178								"		"	"	OUT				"	CLR to Q9	"	"	"	"	"	"	"
		179								"		"	"			OUT		"	CLR to Q10	"	"	"	"	"	"	"
		180								"		"	"				OUT	"	CLR to Q11	"	"	"	"	"	"	"
		181	OUT							"		"	"					"	CLR to Q12	"	"	"	"	"	"	"

See footnotes at end of table III.

TABLE III. Group A inspection for device type 13 – Continued.

Symbol	MIL-STD-883 method	Case E,F,X	Terminal conditions 1/																Measured terminal	Test limits						Unit
			1	2	3	4	5	6	7	8	9	10	11	12	13	14	15	16		Subgroup 9 T_C = +25°C 14/		Subgroup 10 T_C = +125°C		Subgroup 11 T_C = -55°C 14/		
		2	2	3	4	5	7	8	9	10	12	13	14	15	17	18	19	20								
		Test no.	Q12	Q6	Q5	Q7	Q4	Q3	Q2	GND	Q1	CLK	CLR	Q9	Q8	Q10	Q11	V_{CC}		Min	Max	Min	Max	Min	Max	
t_{THL}	3004 Fig. 4	182								GND	OUT	IN	GND					4.5V	Q1	3	15	3	20	3	15	ns
		183							OUT	“		“	“					“	Q2	“	“	“	“	“	“	“
		184						OUT		“		“	“					“	Q3	“	“	“	“	“	“	“
		185					OUT			“		“	“					“	Q4	“	“	“	“	“	“	“
		186			OUT					“		“	“					“	Q5	“	“	“	“	“	“	“
		187		OUT						“		“	“					“	Q6	“	“	“	“	“	“	“
		188				OUT				“		“	“					“	Q7	“	“	“	“	“	“	“
		189								“		“	“		OUT			“	Q8	“	“	“	“	“	“	“
		190								“		“	“	OUT				“	Q9	“	“	“	“	“	“	“
		191								“		“	“			OUT		“	Q10	“	“	“	“	“	“	“
		192								“		“	“				OUT	“	Q11	“	“	“	“	“	“	“
		193	OUT							“		“	“					“	Q12	“	“	“	“	“	“	“
t_{TLH}	3004 Fig. 4	194								“	OUT	“	“					“	Q1	“	“	“	“	“	“	“
		195							OUT	“		“	“					“	Q2	“	“	“	“	“	“	“
		196						OUT		“		“	“					“	Q3	“	“	“	“	“	“	“
		197					OUT			“		“	“					“	Q4	“	“	“	“	“	“	“
		198			OUT					“		“	“					“	Q5	“	“	“	“	“	“	“
		199		OUT						“		“	“					“	Q6	“	“	“	“	“	“	“
		200				OUT				“		“	“					“	Q7	“	“	“	“	“	“	“
		201								“		“	“		OUT			“	Q8	“	“	“	“	“	“	“
		202								“		“	“	OUT				“	Q9	“	“	“	“	“	“	“
		203								“		“	“			OUT		“	Q10	“	“	“	“	“	“	“
		204								“		“	“				OUT	“	Q11	“	“	“	“	“	“	“
		205	OUT							“		“	“					“	Q12	“	“	“	“	“	“	“
f_{MAX} 15/	Fig. 4	206								“	OUT	“	“					“	Q1	28		21		28		MHz

See footnotes on next page.

TABLE III. Group A inspection – Continued.

1/ Input pins not designated shall be “high” level logic or “low” level logic, or may be left open provided they do not influence the outcome of the measurement. Output pins not designated shall be tied to the loads or left open provided the do not influence the outcome of the measurement. Exceptions are as follows:

a. $V_{IC(POS)}$ tests, the GND terminal shall be open and the minimum limit of 0.4 V applies only where test equipment limitations do not allow for the GND pin to be open during test.

b. $V_{IC(NEG)}$ tests, the V_{CC} terminal shall be open.

c. I_{CC} tests, the output terminal shall be open.

2/ Apply sufficient clock pulses (see 28/) to set outputs ‘high’.

3/ Apply 1.2 V for device types 01 and 03; apply 4.2 V for device types 02 and 04.

4/ Apply sufficient ⎍ (3.7 V minimum/6.0 V maximum for high; 0.0 V + 0.9 V for low) pulses to set outputs ‘low’ prior to test.

5/ Apply sufficient ⎍ (3.15 V minimum/4.0 V maximum for high; 0.0 V + 0.9 V for low) pulses to set outputs ‘high’ prior to test.

6/ Apply GND for device types 01 nad 03; apply 4.0 V for device types 02 and 04.

7/ For device types 01 and 04, set outputs to count of nine (QA = 1, QD = 1, QB = 0, QC = 0) prior to measurements. For device types 02 and 04, set outputs to count of fifteen (QA = QB = QC = QD = 1) prior to test.

8/ See 4.4.1c.

9/ Only summary attributes data is required.

10/ Tests performed in sequence.

11/ A = 3.7 V; B = 0.4 V.

12/ X = indeterminate output voltage.

13/ Output shall be: high ≥ 2.5 V; low < 2.5 V; $|I_{OUT}|$ = 20 μA.

14/ See 4.4.1d.

15/ f_{MAX} minimum limit specified is the frequency of the pulse. The output frequency shall be one-half the input frequency. The f_{MAX} requirement is considered met if proper output state changes occur with the pluse repetition period set to that given in the limits column.

16/ For device types 01 and 02, apply one clock pulse prior to test. For device types 03 and 04, apply one clock pulse prior to test and another clock pulse during test.

17/ Apply a positive going pulse ⎍ (4.2 V minimum/6.0 V maximum for high; 0.0 V + 1.2 V for low).

18/ Apply ⎍ (3.15 V minimum/4.5 V maximum for high; 0.0 V + 0.9 V for low), one pulse while load is ‘low’ and another pulse after load has gone ‘high’ (during test).

19/ Apply ⎍ (3.15 V minimum/4.5 V maximum for high; 0.0 V + 0.9 V for low) pulse prior to test.

20/ Apply ⎍ (3.15 V minimum/4.5 V maximum for high; 0.0 V + 0.9 V for low) pulse during test.

21/ Apply ⎍ (3.15 V minimum/4.5 V maximum for high; 0.0 V + 0.9 V for low) pulse during test.

TABLE III. Group A inspection – Continued.

22/ Apply a positive going pulse (3.7 V minimum/4.5 V maximum for high; 0.0 V + 0.9 V for low).

23/ Apply sufficient pulses (see 5/) to cause the output to transition.

24/ Apply (4.2 V minimum/6.0 V maximum for high; 0.0 V + 0.9 V for low) prior to test after clear pulse.

25/ Apply (4.2 V minimum/6.0 V maximum for high; 0.0 V + 0.9 V for low) pulse prior to test.

26/ Apply 2 pulses prior to test after clear pulse (see 24/).

27/ Apply 4 pulses prior to test after clear pulse (see 24/).

28/ Apply (4.2 V minimum/6.0 V maximum for high; 0.0 V + 1.2 V for low) pulses to set output 'high' prior to test.

29/ This I_{CC} and functional tests shall be performed in the test number sequence shown with no intervening changes to terminal conditions. During the functional test, input terminals designated "PA", "PB", etc., shall have applied thereto a specified number of single pulses with the following parameters: Pulse amplitude = V_{CC} maximum to V_{CC}, 4 percent minimum. For I_{CC} tests, the input terminal is as designated. These pulses are enumerated as follows:

Symbol	Pulses	Symbol	Pulses	Symbol	Pulses	Symbol	Pulses
PA	1	PF	7	PK	85	PS	2047
PB	2	PG	15	PL	127	PT	4095
PC	3	PH	31	PM	255	PU	5461
PD	4	PI	42	PN	511	PV	8191
PE	5	PJ	63	PR	1023	PY	10922

During the functional tests, device output voltages are: Don't care "X", high "H", or low "L" as specified in the terminal condition columns. The output voltage limits over the specified temperature range are "H" ≥ 2.5 V, "L" < 2.5 V, $|I_{OUT}|$ = 20 μA maximum. Only a summary of attribute data is required.

30/ f_{MAX} minimum limits specified are the frequency at the inputs. The output frequency shall be one-half the input frequency when measured at QA. The output frequency shall be one-fifth the input frequency when measured at QD.

31/ Apply input test parameters such that t_{SU}, t_{HOLD}, t_{REM}, and t_W values are not greater than the recommended operating minimums (see 1.4). Preset outputs to required state if necessary prior to test.

4.5 Methods of inspection. Methods of inspection shall be specified and as follows:

4.5.1 Voltage and current. Unless otherwise specified, all voltages given are referenced to the microcircuit GND terminal. Currents given are conventional current and positive when flowing into the referenced terminal.

4.5.2 Burn-in and life test cool down procedures. When the burn-in and life tests are completed and prior to removal of bias voltages, the devices under test (DUT) shall be cooled to within 10°C of their power stable condition at room temperature; then, electrical parameter end-point measurements shall be performed.

TABLE IV. Delta limits at 25°C.

Parameter 1/	Device types	
	All	
I_{CC}		±30 nA

1/ The above parameters shall be recorded before and after the required burn-in and life tests to determine deltas (Δ).

4.5.3 Quiescent supply current (I_{CC} test). When performing quiescent supply current measurements (I_{CC}), the meter shall be placed so that all currents flow through the meter.

5. PACKAGING

5.1 Packaging requirements. For acquisition purposes, the packaging requirements shall be as specified in the contract or order (see 6.2). When packaging of materiel is to be performed by DoD or in-house contractor personnel, these personnel need to contact the responsible packaging activity to ascertain packaging requirements. Packaging requirements are maintained by the Inventory Control Point's packaging activity within the Military Service or Defense Agency, or within the military service's system commands. Packaging data retrieval is available from the managing Military Department's or Defense Agency's automated packaging files, CD-ROM products, or by contacting the responsible packaging activity.

6. NOTES

(This section contains information of a general or explanatory nature that may be helpful, but is not mandatory.)

6.1 Intended use. Microcircuits conforming to this specification are intended for original equipment design applications and logistic support of existing equipment.

6.2 Acquisition requirements. Acquisition documents should specify the following:

a. PIN and compliance identifier, if applicable (see 1.2)..

b. Requirements for delivery of one copy of the quality conformance inspection data pertinent to the device inspection lot to be supplied with each shipment by the device manufacturer, if applicable.

c. Requirements for certificate of compliance, if applicable.

d. Requirements for notification of change of product or process to contracting activity in addition to notification to the qualifying activity, if applicable.

e. Requirements for failure analysis (including required test condition of method 5003 of MIL-STD-883), corrective action, and reporting of results, if applicable.

f. Requirements for product assurance options.

g. Requirements for special carriers, lead lengths, or lead forming, if applicable. These requirements should not affect the part number. Unless otherwise specified, these requirements will not apply to direct purchase by or direct shipment to the Government.

h. Requirements for "JAN" marking.

j. Packaging requirements (see 5.1).

6.3 Superseding information. The requirements of MIL-M-38510 have been superseded to take advantage of the available Qualified Manufacturer Listing (QML) system provided by MIL-PRF-38535. Previous references to MIL-M-38510 in this document have been replaced by appropriate references to MIL-PRF-38535. All technical requirements now consist of this specification and MIL-PRF-38535. The MIL-M-38510 specification sheet number and PIN have been retained to avoid adversely impacting existing government logistics systems and contractors parts lists.

6.4 Qualification. With respect to products requiring qualification, awards will be made only for products which are, at the time of award of contract, qualified for inclusion in Qualified Manufacturers List QML-38535 whether or not such products have actually been so listed by that date. The attention of the contractors is called to these requirements, and manufacturers are urged to arrange to have the products that they propose to offer to the Federal Government tested for qualification in order that they may be eligible to be awarded contracts or purchase orders for the products covered by this specification. Information pertaining to qualification of products may be obtained from DSCC-VQ, P.O. Box 3990, Columbus, Ohio 43218-3990.

6.5 Abbreviations, symbols, and definitions. The abbreviations, symbols, and definitions used herein are defined in MIL-PRF-38535, MIL-HDBK-1331, and as follows:

C_{IN} ..... Input terminal-to-GND capacitance.
I_{CC} ..... Quiescent supply current.
T_A ..... Free air temperature.
GND ..... Ground zero voltage potential.
V_{CC} ..... Positive supply voltage.

6.6 Logistic support. Lead materials and finishes (see 3.4) are interchangeable. Unless otherwise specified, microcircuits acquired for Government logistic support will be acquired to device class S for National Aeronautics and Space Administration or class B for Department of Defense (see 1.2.2), lead material and finish A (see 3.4). Longer length leads and lead forming should not affect the part number.

6.7 Data reporting. When specified in the purchase order or contract, a copy of the following data, as applicable, will be supplied.

a. Attributes data for all screening tests (see 4.2) and variables data for all static burn-in, dynamic burn-in, and steady-state life tests (see 3.6).

b. A copy of each radiograph.

c. The technology conformance inspection (TCI) data (see 4.4).

d. Parameter distribution data on parameters evaluated during burn-in (see 3.6).

e. Final electrical parameters data (see 4.2d).

6.8 Substitutability. The cross-reference information below is presented for the convenience of users. Microcircuits covered by this specification will functionally replace the listed generic-industry type. Generic-industry microcircuit types may not have equivalent operational performance characteristics across military temperature ranges or reliability factors equivalent to MIL-M-35810 device types and may have slight physical variations in relation to case size. The presence of this information should not be deemed as permitting substitution of generic-industry types for MIL-M-38510 types or as a waiver of any of the provisions of MIL-PRF-38535.

Military device type	Generic-industry type
01	54HC160
02	54HC161
03	54HC162
04	54HC163
05	54HC191
06	54HC192
07	54HC193
08	54HC390
09	54HC393
10	54HC4017
11	54HC4020
12	54HC4024
13	54HC4040

6.9 Changes from previous issue. Marginal notations are not used in this revision to identify changes with respect to the previous issue due to the extent of the changes.

Custodians:
Army - CR
Navy - EC
Air Force - 11
DLA - CC

Preparing activity:
DLA - CC

(Project 5962-2005-025)

Review activities:
Army - MI, SM
Navy - AS, CG, MC, SH, TD
Air Force – 03, 19, 99
NA

NOTE: The activities listed above were interested in this document as of the date of this document. Since organizations and responsibilities can change, you should verify the currency of the information above using ASSIST Online database at http://assist.daps.dla.mil/.