INCH-POUND
MIL-M-38510/657A
19 May 2006

SUPERSEDING
MIL-M-38510/657
30 September 1986

MILITARY SPECIFICATION

# MICROCIRCUITS, DIGITAL, HIGH-SPEED CMOS, BUFFER GATES, MONOLITHIC SILICON

Reactivated after 19 May 2006 and may be used for new and existing designs and acquisitions.

This specification is approved for use by all Departments and Agencies of the Department of Defense.

The requirements for acquiring the product herein shall consist of this specification sheet and MIL-PRF 38535.

## 1. SCOPE

1.1 Scope. This specification covers the detail requirements for monolithic silicon, high speed CMOS, logic microcircuits. Two product assurance classes and a choice of case outlines and lead finishes are provided and are reflected in the complete Part or Identifying Number (PIN). For this product, the requirements of MIL-M-38510 have been superseded by MIL-PRF-38535 (see 6.3).

1.2 Part or identifying number (PIN). The PIN is in accordance with MIL-PRF-38535 and as specified herein.

1.2.1 Device types. The device types are as follows:

| Device type | Circuit |
|---|---|
| 01/51 | Hex inverter |
| 02/52 | Hex inverter Schmitt trigger |
| 03/53 | Inverting octal three-state buffer |
| 04/54 | Octal three-state buffer |
| 05/55 | Octal three-state buffer |
| 06 | Hex bus driver, gated enable inputs for X-Y coincident bus control with three-state outputs |
| 07 | Hex inverter bus driver, gated enable inputs for X-Y coincident bus control with three-state outputs |
| 08 | Hex bus driver, 4-line and 2-line enable inputs with three-state outputs |
| 09 | Hex inverter bus driver, 4-line and 2-line enable inputs with three-state outputs |
| 10/60 | Octal inverter bus driver with three-state outputs |
| 11/61 | Octal non-inverting bus driver with three-state outptus |

1.2.2 Device class. The device class is the product assurance level as defined in MIL-PRF-38535.

1.2.3 Case outlines. The case outlines are as designated in MIL-STD-1835 and as follows:

| Outline letter | Descriptive designator | Terminals | Package style |
|---|---|---|---|
| C | GDIP1-T14 or CDIP2-T14 | 14 | Dual-in-line |
| E | GDIP1-T16 or CDIP2-T16 | 16 | Dual-in-line |
| D | GDFP1-F14 or CDFP2-F14 | 14 | Flat pack |
| F | GDFP2-F16 or CDFP3-F16 | 16 | Flat pack |
| R | GDIP1-T20 or CDIP2-T20 | 20 | Dual-in-line |
| S | GDFP2-F20 or CDFP3-F20 | 20 | Flat pack |
| X | See figure 4 | 20 | Flat pack |
| 2 | CQCC1-N20 | 20 | Square leadless chip carrier |

Comments, suggestions, or questions on this document should be addressed to: Commander, Defense Supply Center Columbus, ATTN: DSCC-VAC, P.O. Box 3990, Columbus, OH 43218-3990, or email to CMOS@dscc.dla.mil. Since contact information can change, you may want to verify the currency of this address information using the ASSIST Online database at http://assist.daps.dla.mil.

1.3 Absolute maximum ratings.

Supply voltage range ($V_{CC}$) ..... -0.5 V dc to +7.0 V dc
DC input voltage range ($V_{IN}$) ..... -0.5 V dc to $V_{CC}$ + 0.5 V dc
DC output voltage range ($V_{OUT}$) ..... -0.5 V dc to $V_{CC}$ + 0.5 V dc
Clamp diode current ($I_{IK}$, $I_{OK}$) ..... ±20 mA
DC output current per pin ($I_{OUT}$):
Device types 01, 51, 02, 52 ..... ±25 mA
Device types 03, 04, 05, 06, 07, 08, 09, 10, 11..... ±35 mA
DC $V_{CC}$ or GND current per pin ($I_{OC}$):
Device types 01, 51, 02, 52 ..... ±50 mA
Device types 53, 54, 55, 60, 61 ..... ±70 mA
Storage temperature range ($T_{STG}$) ..... -65°C to +150°C
Maximum power dissipation ($P_D$) ..... 300 mW
Lead temperature (soldering, 10 seconds) ..... +300°C
Thermal resistance, junction to case ($\theta_{JC}$) ..... See MIL-STD-1835
Junction temperature ($T_J$) ..... 175°C

1.4 Recommended operating conditions.

Device types 01, 03, 04, 05, 06, 07, 08, 09, 10, 11:
Maximum input low voltage ($V_{IL}$) ..... 0.3 V at $V_{CC}$ = 2.0 V
0.9 V at $V_{CC}$ = 4.5 V
1.2 V at $V_{CC}$ = 6.0 V
Minimum input high voltage ($V_{IH}$) ..... 1.5 V at $V_{CC}$ = 2.0 V
3.15 V at $V_{CC}$ = 4.5 V
4.2 V at $V_{CC}$ = 6.0 V
Device type 02:
Maximum input low voltage ($V_{IL}$) ..... 1.0 V at $V_{CC}$ = 2.0 V
2.45 V at $V_{CC}$ = 4.5 V
3.2 V at $V_{CC}$ = 6.0 V
Minimum input high voltage ($V_{IH}$) ..... 0.7 V at $V_{CC}$ = 2.0 V
1.55 V at $V_{CC}$ = 4.5 V
2.1 V at $V_{CC}$ = 6.0 V
Device types 51, 53, 54, 55, 60, 61:
Maximum input low voltage ($V_{IL}$) ..... 0.8 V at $V_{CC}$ = 4.5 V to 5.5 V
Minimum input high voltage ($V_{IH}$) ..... 2.0 V at $V_{CC}$ = 4.5 V to 5.5 V
Device type 52:
Maximum input low voltage ($V_{IL}$) ..... 0.6 V at $V_{CC}$ = 5.5 V
Minimum input high voltage ($V_{IH}$) ..... 1.9 V at $V_{CC}$ = 4.5 V
Device types 01 through 11:
Supply voltage range ($V_{CC}$) ..... 2.0 V dc to 6.0 V dc
Output voltage range ($V_{OUT}$) ..... 0.0 V to $V_{CC}$
Operating temperature range ($T_C$) ..... -55°C to +125°C
Maximum input rise and fall times ($t_r$, $t_f$) (except device type 02):
$V_{CC}$ = 2.0 V ..... 1000 ns
$V_{CC}$ = 4.5 V ..... 500 ns
$V_{CC}$ = 6.0 V ..... 400 ns
Device types 51, 52, 53, 54, 55, 60, 61:
Supply voltage range ($V_{CC}$) ..... 4.5 V dc to 5.5 V dc
Output voltage range ($V_{OUT}$) ..... 0.0 V to $V_{CC}$
Operating temperature range ($T_C$) ..... -55°C to +125°C
Maximum input rise and fall times ($t_r$, $t_f$) (except device type 52):
$V_{CC}$ = 4.5 V to 5.5 V ..... 500 ns

2. APPLICABLE DOCUMENTS

2.1 General. The documents listed in this section are specified in sections 3, 4, or 5 of this specification. This section does not include documents cited in other sections of this specification or recommended for additional information or as examples. While every effort has been made to ensure the completeness of this list, document users are cautioned that they must meet all specified requirements of documents cited in sections 3, 4, or 5 of this specification, whether or not they are listed.

2.2 Government documents.

2.2.1 Specifications and Standards. The following specifications and standards form a part of this specification to the extent specified herein. Unless otherwise specified, the issues of these documents are those cited in the solicitation or contract.

DEPARTMENT OF DEFENSE SPECIFICATION

MIL-PRF-38535 - Integrated Circuits (Microcircuits) Manufacturing, General Specification for.

DEPARTMENT OF DEFENSE STANDARDS

MIL-STD-883 - Test Method Standard Microcircuits.
MIL-STD-1835 - Interface Standard Electronic Component Case Outlines.

(Copies of these documents are available online at http://assist.daps.dla.mil/quicksearch/ or http://assist.daps.dla.mil/ or from the Standardization Document Order Desk, 700 Robbins Avenue, Building 4D, Philadelphia, PA 19111-5094.)

2.3 Order of precedence. In the event of a conflict between the text of this document and the references cited herein, the text of this document takes precedence. Nothing in this document, however, supersedes applicable laws and regulations unless a specific exemption has been obtained.

3. REQUIREMENTS

3.1 Qualification. Microcircuits furnished under this specification shall be products that are manufactured by a manufacturer authorized by the qualifying activity for listing on the applicable qualified manufacturers list before contract award (see 4.3 and 6.4).

3.2 Item requirements. The individual item requirements shall be in accordance with MIL-PRF-38535 and as specified herein or as modified in the device manufacturer's Quality Management (QM) plan. The modification in the QM plan shall not affect the form, fit, or function as described herein.

3.3 Design, construction, and physical dimensions. The design, construction, and physical dimensions shall be as specified in MIL-PRF-38535 and herein.

3.3.1 Logic diagrams and terminal connections. The logic diagrams and terminal connections shall be as specified on figure 1.

3.3.2 Truth tables. The truth tables shall be as specified on figure 2.

3.3.3 Switching time test circuit and waveforms. The switching time test circuit and waveforms shall be as specified on figure 3.

3.3.4 Schematic circuits. The schematic circuits shall be maintained by the manufacturer and made available to the qualifying activity or preparing activity upon request.

3.3.5 Case outlines. The case outlines shall be as specified in 1.2.3, figure 4, and MIL-STD-1835.

3.4 Lead material and finish. The lead material and finish shall be in accordance with MIL-PRF-38535 (see 6.6).

3.5 Electrical performance characteristics. Unless otherwise specified, the electrical performance characteristics are as specified in table I, and apply over the full recommended case operating temperature range.

3.6 Electrical test requirements. The electrical test requirements for each device class shall be the subgroups specified in table II. The electrical tests for each subgroup are described in table III.

3.7 Marking. Marking shall be in accordance with MIL-PRF-38535.

3.8 Microcircuit group assignment. The devices covered by this specification shall be in microcircuit group number 37 (see MIL-PRF-38535, appendix A).

4. VERIFICATION

4.1 Sampling and inspection. Sampling and inspection procedures shall be in accordance with MIL-PRF-38535 or as modified in the device manufacturer's Quality Management (QM) plan. The modification in the QM plan shall not affect the form, fit, or function as described herein.

4.2 Screening. Screening shall be in accordance with MIL-PRF-38535 and shall be conducted on all devices prior to qualification and conformance inspection. The following additional criteria shall apply:

a. The burn-in test duration, test condition, and test temperature, or approved alternatives shall be as specified in the device manufacturer's QM plan in accordance with MIL-PRF-38535. The burn-in test circuit shall be maintained under document control by the device manufacturer's Technology Review Board (TRB) in accordance with MIL-PRF-38535 and shall be made available to the acquiring or preparing activity upon request. The test circuit shall specify the inputs, outputs, biases, and power dissipation, as applicable, in accordance with the intent specified in method 1015 of MIL-STD-883.

b. Delete the sequence specified as interim (pre-burn-in) electrical parameters through interim (post-burn-in) electrical parameters of table IA of MIL-PRF-38535 and substitute lines 1 through 7 of table II herein.

c. Burn-in (method 1015 of MIL-STD-883).

(1) Unless otherwise specified in the manufacturers QM plan for static tests (test condition A), ambient temperature ($T_A$) shall be +125°C minimum. Test duration for each static test shall be 24 hours minimum for class S devices and in accordance with table I of method 1015 for class B devices.

i. For static burn-in I, all inputs shall be connected to GND. Outputs shall be open or connected to $V_{CC}/2$. Resistors are optional on outputs if open. Resistors are required on inputs and required on outputs connected to $V_{CC}/2$. R = 680Ω to 47 kΩ.

ii. For static burn-in II, all inputs shall be connected through the resistors to $V_{CC}$. Outputs shall be open or connected to $V_{CC}/2$. Resistors are optional on outputs if open. Resistors are required on inputs and required on outputs connected to $V_{CC}/2$. R = 680Ω to 47 kΩ.

iii. $V_{CC}$ = 6.0 V ±0.5 V for device types 01-11.
$V_{CC}$ = 5.5 V ±0.5 V for device types 51, 52, 53, 54, 55, 60, and 61.

(2) Unless otherwise specified in the manufacturers QM plan for dynamic test (test condition D), ambient temperature shall be +125°C minimum. Test duration shall be in accordance with table I of method 1015.

i. The output enable control pins shall be connected through the resistors in parallel to $V_{CC}$ or GND, as applicable, to enable the outputs. All other inputs shall be connected through the resistors in parallel to a clock pulse CPI. (Exception: For device types 03, 04, 05, 53, 54, and 55, input pins 2, 4, 6, and 8 shall be connected through the resistors in parallel to a clock pulse $\overline{CPI}$.) Outputs shall be connected through the resistors to $V_{CC}/2$.

ii. Input resistors = 680Ω to 47 kΩ ±20%.

iii. Output resistors = 1 kΩ ±5% for device types 01, 02, 51, 52 and 680Ω ±5% for device types 03, 04-11, 53-55, 60, and 61.

iv. $V_{CC}$ = 6.0 V ±0.5 V for device types 01-11; $V_{CC}$ = 5.5 V for device types 51-55, 60, and 61.

v. $V_{CC}$ = $V_{CC}$ ±0.5 V.

vi. CPI/$\overline{CPI}$ = 25 kHz to 1 MHz square wave; duty cycle = 50% ±15%; $V_{IH}$ = 4.5 V min to $V_{CC}$ maximum; $V_{IL}$ = 0.0 V ±0.5 V; $t_{THL}$, $t_{TLH}$ ≤ 500 μs.

d. Interim and final electrical test parameters shall be as specified in table II.

e. For class S devices, post dynamic burn-in, or class B devices, post static burn-in, electrical parameter measurements may, at the manufacturer's option, be performed separately or included in the final electrical parameter requirements.

4.2.1 Percent defective allowable (PDA).

a. The PDA for class S devices shall be 5 percent for static burn-in and 5 percent for dynamic burn-in, based on the exact number of devices submitted to each separate burn-in.

b. Static burn-in I and II failure shall be cumulative for determining the PDA.

c. The PDA for class B devices shall be in accordance with MIL-PRF-38535 for static burn-in. Dynamic burn-in is not required.

d. Those devices whose measured characteristics, after burn-in, exceed the specified delta ($\Delta$) limits or electrical parameter limits specified in table III, subgroup 1, are defective and shall be removed from the lot. The verified failures divided by the total number of devices in the lot initially submitted to burn-in shall be used to determine the percent defective for the lot and the lot shall be accepted or rejected based on the specified PDA.

4.3 Qualification inspection. Qualification inspection shall be in accordance with MIL-PRF-38535.

4.4 Technology Conformance inspection (TCI). Technology conformance inspection shall be in accordance with MIL-PRF-38535 and herein for groups A, B, C, and D inspections (see 4.4.1 through 4.4.4).

4.4.1 Group A inspection. Group A inspection shall be in accordance with table III of MIL-PRF-38535 and as follows:

a. Tests shall be performed in accordance with table II herein.

b. Subgroups 5 and 6 shall be omitted.

c. Subgroup 4 ($C_{IN}$ and $C_O$ measurements) shall be measured only for initial qualification and after process or design changes that may affect capacitance. Capacitance shall be measured between the designated terminal and $V_{SS}$ at a frequency of 1 MHz.

d. Subgroups 9 and 11 shall be measured only for initial qualification and after process or design changes which may affect dynamic performance.

4.4.2 Group B inspection. Group B inspection shall be in accordance with table II of MIL-PRF-38535.

4.4.3 Group C inspection. Group C inspection shall be in accordance with table IV of MIL-PRF-38535 and as follows:

a. End-point electrical parameters shall be as specified in table II herein. Delta limits shall apply only to subgroup 1 of group C inspection and shall consist of tests specified in table IV herein.

b. The steady-state life test duration, test condition, and test temperature, or approved alternatives shall be as specified in the device manufacturer's QM plan in accordance with MIL-PRF-38535. The burn-in test circuit shall be maintained under document control by the device manufacturer's Technology Review Board (TRB) in accordance with MIL-PRF-38535 and shall be made available to the acquiring or preparing activity upon request. The test circuit shall specify the inputs, outputs, biases, and power dissipation, as applicable, in accordance with the intent specified in method 1005 of MIL-STD-883.

4.4.4 Group D inspection. Group D inspection shall be in accordance with table V of MIL-PRF-38535. End-point electrical parameters shall be as specified in table II herein.

TABLE I. Electrical performance characteristics.

| Test | Symbol | Conditions 1/ -55°C ≤ $T_C$ ≤ +125°C unless otherwise specified | Device type | $V_{CC}$ | Limits Min | Limits Max | Unit |
|---|---|---|---|---|---|---|---|
| High-level output voltage | $V_{OH1}$ 2/ | $V_{IH}$ = 1.5 V, $V_{IL}$ = 0.3 V<br>$I_{OH}$ = -20 μA | 01-11 | 2.0V | 1.95 | | V |
| | $V_{OH2}$ 2/ | $V_{IH}$ = 3.15 V, $V_{IL}$ = 0.9 V<br>$I_{OH}$ = -20 μA | 01-11 | 4.5V | 4.45 | | V |
| | $V_{OH3}$ | $V_{IH}$ = 4.2 V, $V_{IL}$ = 1.2 V<br>$I_{OH}$ = -20 μA | 01-11 | 6.0V | 5.95 | | V |
| | $V_{OH4}$ 2/ | $V_{IH}$ = 3.15 V, $V_{IL}$ = 0.9 V<br>$I_{OH}$ = -4.0 mA | 01, 02 | 4.5V | 3.7 | | V |
| | | $V_{IH}$ = 3.15 V, $V_{IL}$ = 0.9 V<br>$I_{OH}$ = -6.0 mA | 03-11 | | | | |
| | $V_{OH5}$ | $V_{IH}$ = 4.2 V, $V_{IL}$ = 1.2 V<br>$I_{OH}$ = -5.2 mA | 01, 02 | 6.0V | 5.2 | | V |
| | | $V_{IH}$ = 4.2 V, $V_{IL}$ = 1.2 V<br>$I_{OH}$ = -7.8 mA | 03-11 | | | | |
| | $V_{OH6}$ | $V_{IH}$ = 2.0 V, $V_{IL}$ = 0.8 V<br>$I_{OH}$ = -20 μA | 51,53-55,60 61 | 4.5V | 4.40 | | V |
| | $V_{OH7}$ | $V_{IH}$ = 2.0 V, $V_{IL}$ = 0.8 V<br>$I_{OH}$ = -4.0 mA | 51 | 5.5V | 3.7 | | V |
| | | $V_{IH}$ = 2.0 V, $V_{IL}$ = 0.8 V<br>$I_{OH}$ = -6.0 mA | 53-55, 60,61 | | | | |
| | $V_{OH8}$ | $V_{IH}$ = 1.9 V, $V_{IL}$ = 0.5 V<br>$I_{OH}$ = -20 μA | 52 | 4.5V | 4.40 | | V |
| | $V_{OH9}$ | $V_{IH}$ = 2.1 V, $V_{IL}$ = 0.6 V<br>$I_{OH}$ = -4.0 mA | 52 | 5.5V | 3.7 | | V |
| Low-level output voltage | $V_{OL1}$ 2/ | $V_{IH}$ = 1.5 V, $V_{IL}$ = 0.3 V<br>$I_{OL}$ = 20 μA | 01-11 | 2.0V | | 0.05 | V |
| | $V_{OL2}$ 2/ | $V_{IH}$ = 3.15 V, $V_{IL}$ = 0.9 V<br>$I_{OL}$ = 20 μA | 01-11 | 4.5V | | 0.05 | V |
| | $V_{OL3}$ | $V_{IH}$ = 4.2 V, $V_{IL}$ = 1.2 V<br>$I_{OL}$ = 20 μA | 01-11 | 6.0V | | 0.05 | V |
| | $V_{OL4}$ 2/ | $V_{IH}$ = 3.15 V, $V_{IL}$ = 0.9 V<br>$I_{OL}$ = 4.0 mA | 01, 02 | 4.5V | | 0.4 | V |
| | | $V_{IH}$ = 3.15 V, $V_{IL}$ = 0.9 V<br>$I_{OL}$ = 6.0 mA | 03-11 | | | | |
| | $V_{OL5}$ | $V_{IH}$ = 4.2 V, $V_{IL}$ = 1.2 V<br>$I_{OL}$ = 5.2 mA | 01,02 | 6.0V | | 0.4 | V |
| | | $V_{IH}$ = 4.2 V, $V_{IL}$ = 1.2 V<br>$I_{OL}$ = 7.8 mA | 03-11 | | | | |
| | $V_{OL6}$ | $V_{IH}$ = 2.0 V<br>$V_{IL}$ = 0.8 V<br>$I_{OL}$ = 20 μA | 51, 53-55, 60,61 | 4.5V | | 0.1 | V |
| | $V_{OL7}$ | $V_{IH}$ = 2.0 V<br>$V_{IL}$ = 0.8 V<br>$I_{OL}$ = 4.0 mA | 51 | 5.5V | | 0.4 | V |
| | | $V_{IH}$ = 2.0 V<br>$V_{IL}$ = 0.8 V<br>$I_{OL}$ = 6.0 mA | 53-55, 60,61 | | | | |
| | $V_{OL8}$ | $V_{IH}$ = 1.9 V<br>$V_{IL}$ = 0.5 V<br>$I_{OL}$ = 20 μA | 52 | 4.5V | | 0.1 | V |
| | $V_{OL9}$ | $V_{IH}$ = 2.1 V<br>$V_{IL}$ = 0.6 V<br>$I_{OL}$ = 4.0 mA | 52 | 5.5V | | 0.4 | V |

See footnotes at the end of table.

TABLE I. Electrical performance characteristics – Continued.

| Test | Symbol | Conditions 1/ -55°C ≤ $T_C$ ≤ +125°C unless otherwise specified | Device type | $V_{CC}$ | Limits Min | Limits Max | Unit |
|---|---|---|---|---|---|---|---|
| Positive going threshold voltage | $V_{T+}$ | | 02 | 2.0V 2/ | 0.7 | 1.5 | V |
| | | | | 4.5V 2/ | 1.55 | 3.15 | V |
| | | | | 6.0V | 2.10 | 4.2 | V |
| | $V_{T+1}$ | | 52 | 4.5V | 1.2 | 1.9 | V |
| | $V_{T+2}$ | | 52 | 5.5V | 1.4 | 2.1 | V |
| Negative going threshold voltage | $V_{T-}$ | | 02 | 2.0V 2/ | 0.3 | 1.0 | V |
| | | | | 4.5V 2/ | 0.9 | 2.45 | V |
| | | | | 6.0V | 1.2 | 3.2 | V |
| | $V_{T-1}$ | | 52 | 4.5V | 0.5 | 1.2 | V |
| | $V_{T-2}$ | | 52 | 5.5V | 0.6 | 1.4 | V |
| Hysteresis voltage | $V_H$ | | 02 | 2.0V 2/ | 0.2 | 1.2 | V |
| | | | | 4.5V 2/ | 0.4 | 2.1 | V |
| | | | | 6.0V | 0.5 | 2.5 | V |
| | $V_{H1}$ | | 52 | 4.5V | 0.4 | 1.4 | V |
| | $V_{H2}$ | | 52 | 5.5V | 0.4 | 1.5 | V |
| Positive input clamp voltage | $V_{IC+}$ | $I_{IN}$ = 1 mA $T_C$ = +25°C | 01-11 51-55, 60,61 | GND | 1/ | 1.5 | V |
| Negative input clamp voltage | $V_{IC-}$ | $I_{IN}$ = -1 mA $T_C$ = +25°C | 01-11 51-55, 60,61 | OPEN | 1/ | -1.5 | V |
| Input current low | $I_{IL}$ | $V_{IN}$ = GND | 01-11 | 6.0V | | -0.1 | µA |
| | | | 51-55 60,61 | 5.5V | | -0.1 | |
| Input current high | $I_{IH}$ | $V_{IN}$ = $V_{CC}$ | 01-11 | 6.0V | | 0.1 | µA |
| | | | 51-55 60,61 | 5.5V | | 0.1 | |
| Short circuit output current | $I_{OS1}$ 2/ | $V_O$ = GND $V_I$ = GND or $V_{CC}$ | 01,02 | 2.0V | -2 | -50 | mA |
| | | | 03-11 | | -2 | -60 | |
| | $I_{OS2}$ 2/ | | 01,02 | 4.5V | -15 | -150 | |
| | | | 03-11 | | -15 | -165 | |
| | | | 51,52 | 4.5V | -15 | -150 | mA |
| | | | 53-55 60,61 | 4.5V | -15 | -155 | |
| | $I_{OS3}$ 2/ | | 01,02 | 6.0V | -25 | -180 | |
| | | | 03-11 | | -25 | -210 | |
| | $I_{OS4}$ | | 01,02 | 4.0V | -10 | -120 | |
| | | | 03-11 | | -10 | -135 | |
| | | | 51,52 | 4.0V | -10 | -120 | |
| | | | 53-55, 60, 61 | | -10 | -135 | |
| | $I_{OS5}$ 2/ | | 51,52 | 5.5V | -25 | -180 | |
| | | | 53-55 60,61 | | -25 | -210 | |

See footnotes at end of table.

TABLE I. Electrical performance characteristics – Continued.

| Test | Symbol | Conditions 1/ -55°C ≤ $T_C$ ≤ +125°C unless otherwise specified | Device type | $V_{CC}$ | Limits Min | Limits Max | Unit |
|---|---|---|---|---|---|---|---|
| Supply current quiescent | $I_{CC}$ | $V_I$ = 6.0 V<br>$V_I$ = GND | 01,02 | 5.5V | | 10 | μA |
| | | | 03-11 | | | 20 | μA |
| | | $V_I$ = 5.5 V<br>$V_I$ = GND | 51,52 | 5.5V | | 10 | μA |
| | | | 53-55<br>60,61 | | | 20 | μA |
| Three-state current quiescent | $I_{CCZ}$ | $V_I$ = 6.0 V or GND | 03-11 | 6.0V | | 10 | μA |
| | | $V_I$ = 5.5 V or GND | 53-55,<br>60,61 | 5.5V | | 10 | μA |
| Three-state output leakage current low | $I_{OZL}$ | $V_{OUT}$ = GND<br>OC = $V_{IH}$ or $V_{IL}$ 3/ | 03-11 | 6.0V | | -2.0 | μA |
| | | | 53-55,<br>60,61 | 5.5V | | -2.0 | μA |
| Three-state output leakage current high | $I_{OZH}$ | $V_{OUT}$ = $V_{CC}$<br>OC = $V_{IH}$ or $V_{IL}$ 3/ | 03-11 | 6.0V | | +2.0 | μA |
| | | | 53-55,<br>60,61 | 5.5V | | +2.0 | μA |
| Additional supply current quiescent per input pin (one unit load) | $I_{CC}\Delta$<br>4/ | For all inputs, $V_{IL}$ = 0.4 V and $V_{IH}$ = 2.4 V<br>Test pin at $V_{IN}$ = 2.4 V<br>When not tested, control pins are at $V_{IH}$ = $V_{CC}$ and $V_{IL}$ = GND<br>$I_O$ = 0 μA | 52,54 | 5.5V | | 1.5 | mA |
| | | | 51,53,55<br>60,61 | | | 3.0 | |
| Input capacitance | $C_{IN}$ | $T_C$ = 25°C | All | | | 10 | pF |
| Three-state output capacitance | $C_O$ | $T_C$ = 25°C | 03-11,<br>53-55,<br>60,61 | | | 20 | pF |
| Power dissipation capacitance | $C_{PD}$<br>2/ 5/ | $T_C$ = +25°C | 01 | | | 21 | pF |
| | | | 02 | | | 27 | |
| | | | 03-05<br>10, 11 | | | 50 | |
| | | | 06-09<br>53-55 | | | 45 | |
| | | | 51 | | | 24 | |
| | | | 52 | | | 20 | |
| | | | 60, 61 | | | 55 | |

See footnotes at end of table.

TABLE I. Electrical performance characteristics – Continued.

| Test | Symbol | Conditions 1/ -55°C ≤ $T_C$ ≤ +125°C unless otherwise specified | Device type | $V_{CC}$ | Limits | | Unit |
|---|---|---|---|---|---|---|---|
| | | | | | Min | Max | |
| Propagation delay time | $t_{PHL}$ $t_{PLH}$ 6/, 7/ | $C_L$ = 50 pF ± 10% | 01 | 4.5V | 4 | 22 | ns |
| | | | 02 | 4.5V | 8 | 33 | ns |
| | | | 03 | 4.5V | 5 | 23 | ns |
| | | | 04 | 4.5V | 5 | 27 | ns |
| | | | 05 | 4.5V | 5 | 27 | ns |
| | | | 06 | 4.5V | 5 | 28 | ns |
| | | | 07 | 4.5V | 5 | 29 | ns |
| | | | 08 | 4.5V | 5 | 28 | ns |
| | | | 09 | 4.5V | 5 | 29 | ns |
| | | | 10 | 4.5V | 8 | 29 | ns |
| | | | 11 | 4.5V | 8 | 29 | ns |
| | | | 51 | 4.5V | 4 | 23 | ns |
| | | | 52 | 4.5V | 10 | 44 | ns |
| | | | 53 | 4.5V | 8 | 29 | ns |
| | | | 54 | 4.5V | 8 | 30 | ns |
| | | | 55 | 4.5V | 8 | 33 | ns |
| | | | 60 | 4.5V | 10 | 35 | ns |
| | | | 61 | 4.5V | 10 | 35 | ns |
| Output enable time | $t_{PZH}$, $t_{PZL}$ 6/, 7/ | $C_L$ = 50 pF ± 10% $R_L$ = 1kΩ ± 10% | 03, 04, 05 | 4.5V | 5 | 35 | ns |
| | | | 10, 11 | 4.5V | 8 | 41 | ns |
| | | | 53, 55 | 4.5V | 8 | 41 | ns |
| | | | 54 | 4.5V | 8 | 44 | ns |
| | $t_{PZH}$ 6/, 7/ | | 06, 07 | 4.5V | 5 | 51 | ns |
| | | | 08, 09 | 4.5V | 5 | 44 | ns |
| | | | 60, 61 | 4.5V | 7 | 53 | ns |
| | $t_{PZL}$ 6/, 7/ | | 06, 07 | 4.5V | 5 | 51 | ns |
| | | | 08, 09 | 4.5V | 5 | 44 | ns |
| | | | 60, 61 | 4.5V | 10 | 53 | ns |
| Output disable time | $t_{PHZ}$, $t_{PLZ}$ 6/, 7/ | $C_L$ = 50 pF ± 10% $R_L$ = 1kΩ ± 10% | 03, 04, 05 | 4.5V | 5 | 35 | ns |
| | | | 10, 11 | 4.5V | 8 | 41 | ns |
| | | | 53, 55 | 4.5V | 8 | 41 | ns |
| | | | 54 | 4.5V | 8 | 44 | ns |
| | | | 06, 07 | 4.5V | 5 | 51 | ns |
| | | | 08, 09 | 4.5V | 5 | 41 | ns |
| | | | 60, 61 | 4.5V | 10 | 41 | ns |
| Transition time | $t_{THL}$, $t_{TLH}$ 6/, 7/ | $C_L$ = 50 pF ± 10% | 01, 02 | 4.5V | 3 | 20 | ns |
| | | | 03, 04, 06-11 | 4.5V | 2 | 16 | ns |
| | | | 05 | 4.5V | 1 | 16 | ns |
| | | | 51, 52 | 4.5V | 3 | 20 | ns |
| | | | 53-55 60, 61 | 4.5V | 2 | 16 | ns |

See footnotes on next sheet.

TABLE I. Electrical performance characteristics – Continued.

1/ Complete terminal conditions and limits shall be as specified in table III.

2/ Guaranteed but not tested.

3/ $I_{OZL}$ set buffer output to high state. $I_{OZH}$ set buffer output to low state.

4/ Total supply current $I_{CC} + I_{CC}\Delta$.

5/ Power dissipation capacitance ($C_{PD}$) typically per inverter (device types 01, 02, 51, 52) or per buffer (device types 03-11, 53-55, 60, 61).

6/ Tested at $V_{CC}$ = 4.5 V at +125°C for sample testing and $V_{CC}$ = 4.5 V at +25°C for screening. Guaranteed at other $V_{CC}$ voltages and temperatures. See table IA and exception in 4.4.1d.

7/ For propagation and transition delay times at $V_{CC}$ = 2.0 V, increase limit by a factor of 5. For propagation and transition delay times at $V_{CC}$ = 6.0 V, decrease limit by a factor of 0.85.

TABLE IA. Calculated dynamic figures at –55°C/25°C ambient temperature.

| $V_{CC}$ | $T_A$ = (°C) | |
|---|---|---|
| | +125 | -55/+25 |
| 2.0V | 5 | 5 x 0.75 |
| | ↑ | ↑ |
| 4.5V | 1 → | → 0.75 |
| | ↓ | ↓ |
| 6.0V | 0.85 | 0.85 x 0.75 |

Normalized numbers
(+125°C equals 1)

NOTE: The 2.0 V and 6.0 V numbers are derived from their 4.5 V integer value (rounding off according 5/4).

TABLE II. Burn-in and electrical test requirements.

| Line no. | MIL-PRF-38535 test requirements | Class S device 1/ | | | Class B device 1/ | | |
|---|---|---|---|---|---|---|---|
| | | Ref. par. | Table III Subgroups 2/ | Table IV delta limits 3/ | Ref. par. | Table III subgroups 2/ | Table IV delta limits 3/ |
| 1 | Interim electrical parameters | | 1 | | | 1 | |
| 2 | Static burn-in I (method 1015) | 4.2c 4.5.2 | Req'd | | | Not req'd | |
| 3 | Same as line 1 | | 1* | Δ | | | |
| 4 | Static burn-in II (method 1015) | 4.2c 4.5.2 | Req'd | | 4.2c 4.5.2 | req'd 4/ | |
| 5 | Same as line 1 | 4.2e | 1* | Δ | 4.2e | 1* 4/ | Δ |
| 6 | Dynamic burn-in (method 1015) | 4.2c 4.5.2 | Req'd | | | Not req'd | |
| 7 | Same as line 1 | 4.2e | 1 | Δ | | | |
| 8 | Final electrical parameters | | 1*, 2, 3, 7, 8, 9 5/ | | | 1*, 2, 7, 9 4/ 5/ | |
| 9 | Group A test requirements | 4.4.1 | 1, 2, 3, 4, 7, 8, 9, 10, 11 5/ | | 4.4.1 | 1, 2, 3, 4, 7, 8, 9, 10, 11 5/ | |
| 10 | Group B test when using method 5005 QCI option | 4.4.2 | 1, 2, 3, 7, 8, 9, 10, 11 5/ | Δ | | | |
| 11 | Group C end-point electrical parameters | 4.4.2 | 1, 2, 3, 7, 8, 9, 10, 11 5/ | Δ | 4.4.3 | 1, 2 | Δ |
| 12 | Group D end-point electrical parameters | 4.4.4 | 1, 2, 3 | | 4.4.4 | 1, 2 | |

1/ Blank spaces indicate tests are not applicable.

2/ * indicates PDA applies to subgroup 1 (see 4.2.1).

3/ Δ indicates delta limits shall be required only on table III subgroup 1, where specified, and the delta values shall be computed with reference to the previous interim electrical parameters.

4/ The device manufacturer may, at his option, either complete subgroup 1 electrical parameter measurements, including delta measurements, within 96 hours after burn-in completion (removal of bias); or may complete subgroup 1 electrical measurements without delta measurements within 24 hours after burn-in completion (removal of bias).

5/ Subgroups 7 and 8 do not apply to device types 01, 02, 51, and 52.

DEVICE TYPES 01 AND 51
CASES C AND D

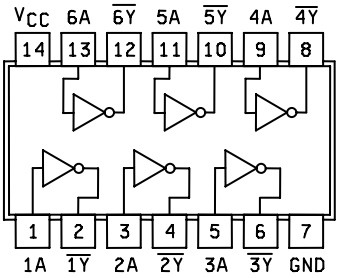


1 OF 6 INVERTERS

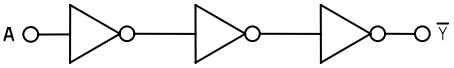


DEVICE TYPES 01,02,51 AND 52
CASES 2

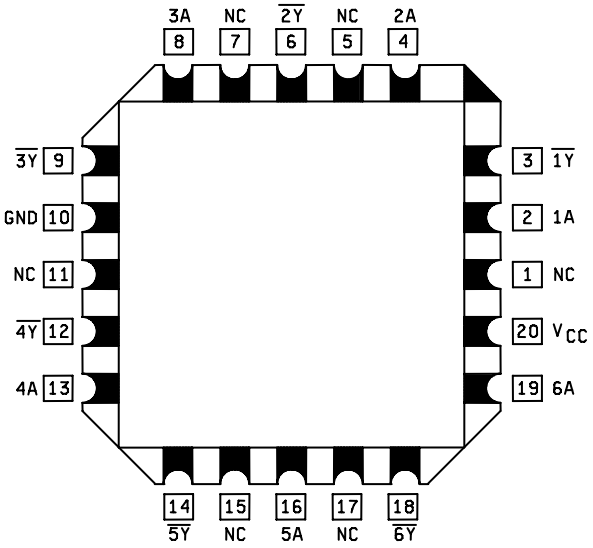


FIGURE 1. Logic diagrams and terminal connections (top view).

DEVICE TYPES 02 AND 52

CASES C AND D

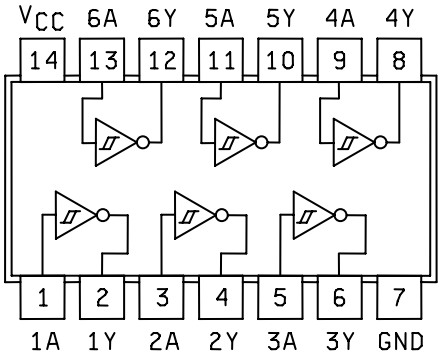


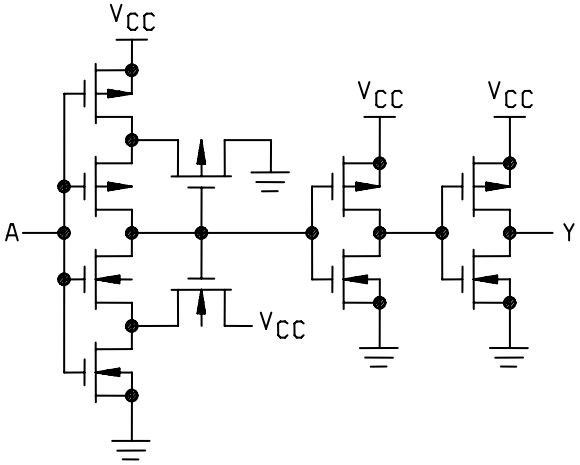


FIGURE 1. Logic diagrams and terminal connections (top view) – Continued.

DEVICE TYPES 03 AND 53
CASES R AND S

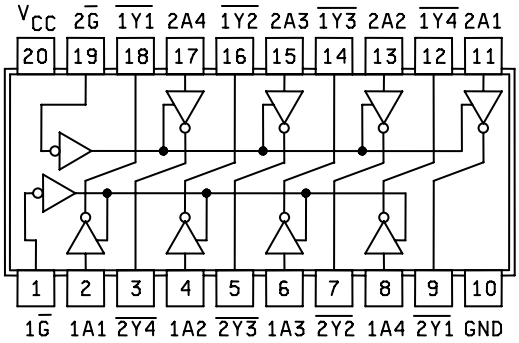


DEVICE TYPES 03 AND 53
CASE 2

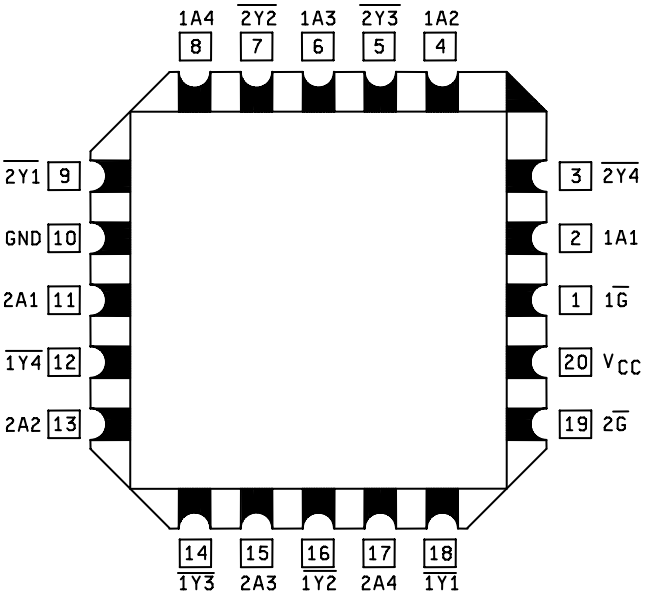


FIGURE 1. Logic diagrams and terminal connections – Continued.

Device types 03 and 53

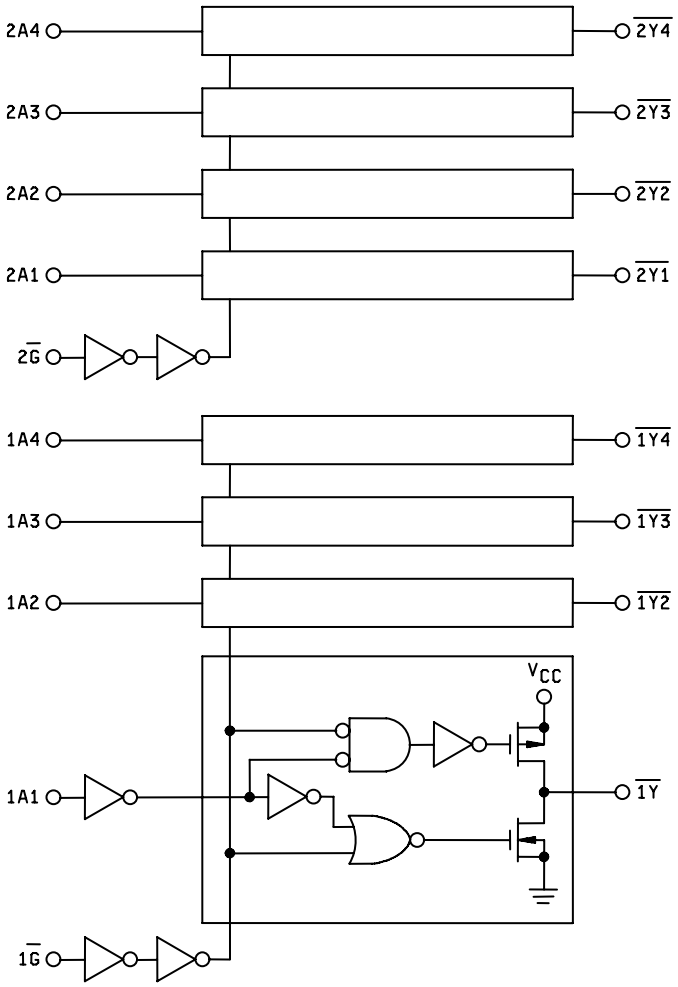


FIGURE 1. Logic diagrams and terminal connections – Continued.

DEVICE TYPES 04 AND 54
CASES R AND S

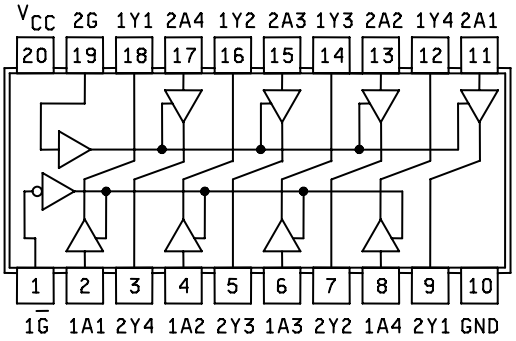


CASE 2

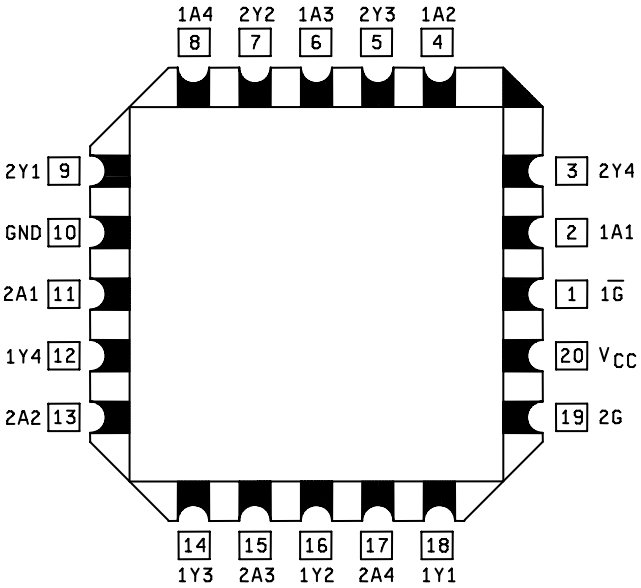


FIGURE 1. Logic diagrams and terminal connections – Continued.

Device types 04 and 54

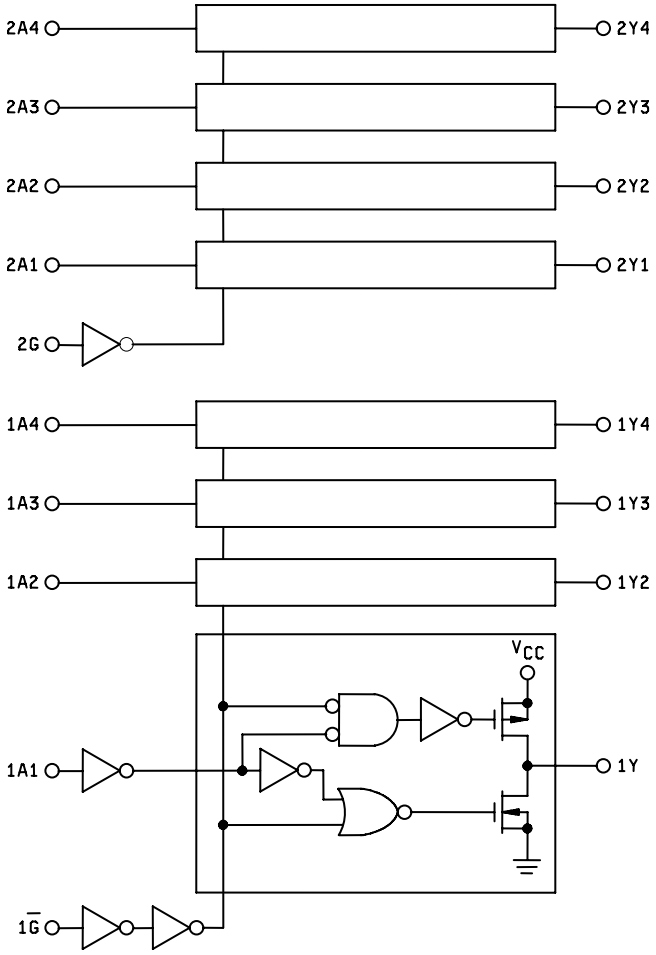


FIGURE 1. Logic diagrams and terminal connections – Continued.

DEVICE TYPES 05 AND 55
CASES R AND S

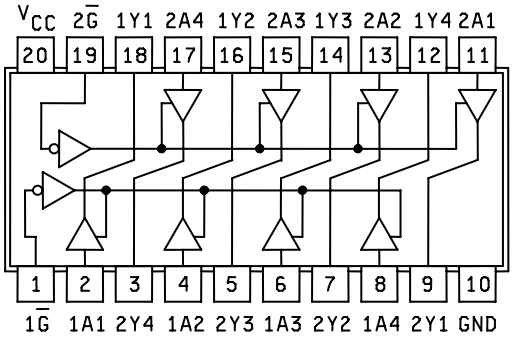


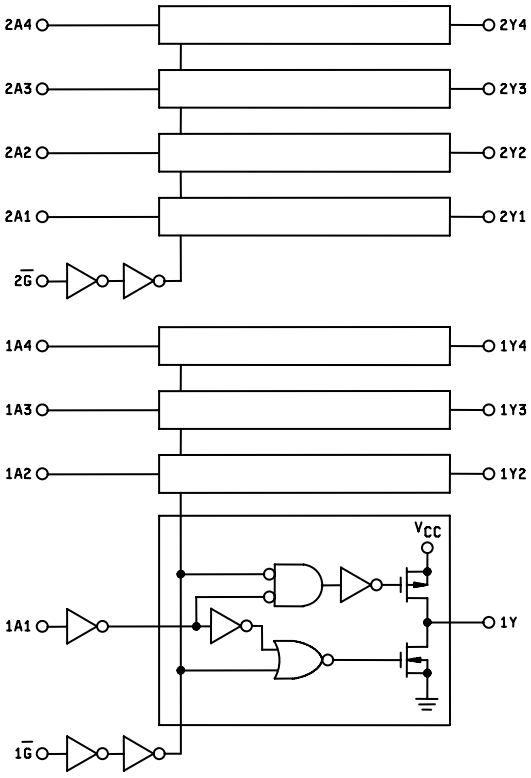


FIGURE 1. Logic diagrams and terminal connections – Continued.

DEVICE TYPES 05 AND 55
CASE 2

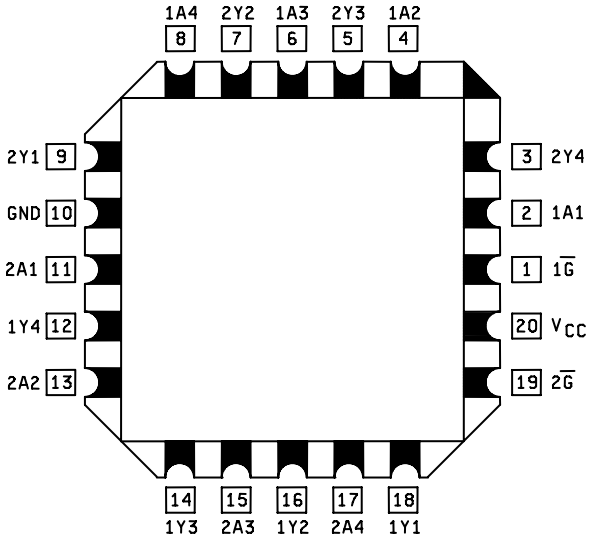


DEVICE TYPES 10 AND 60
CASES R AND S

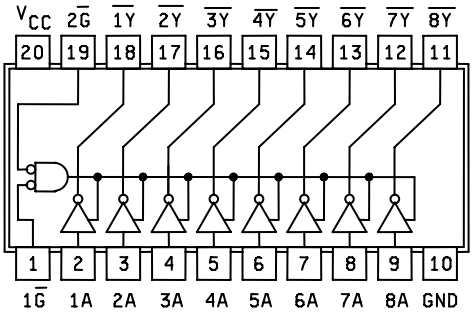


FIGURE 1. Logic diagrams and terminal connections – Continued.

DEVICE TYPES 10,11,60 AND 61
CASE 2

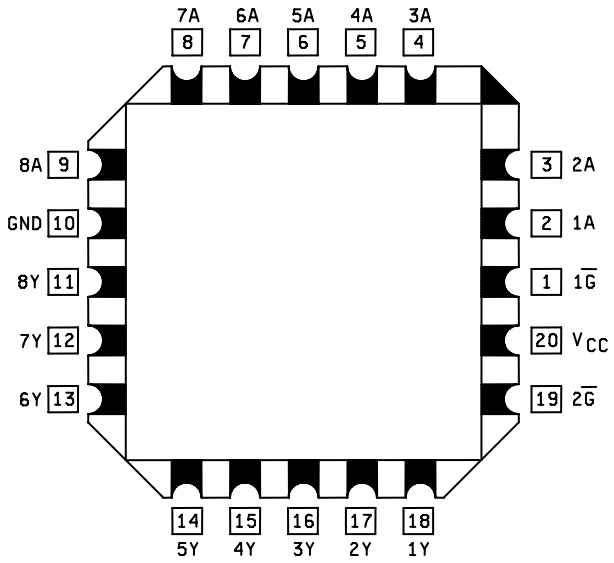


DEVICE TYPES 11 AND 61
CASES R, S, AND X

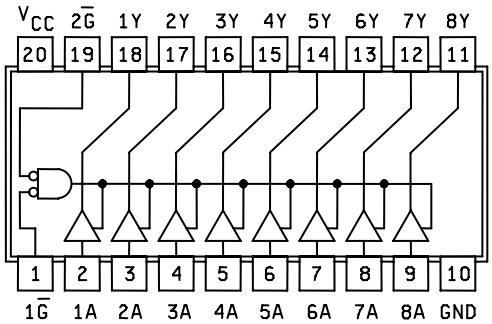


NOTE: Bars are added to the output symbols for device types 10 and 60 above.

FIGURE 1. Logic diagrams and terminal connections – Continued.

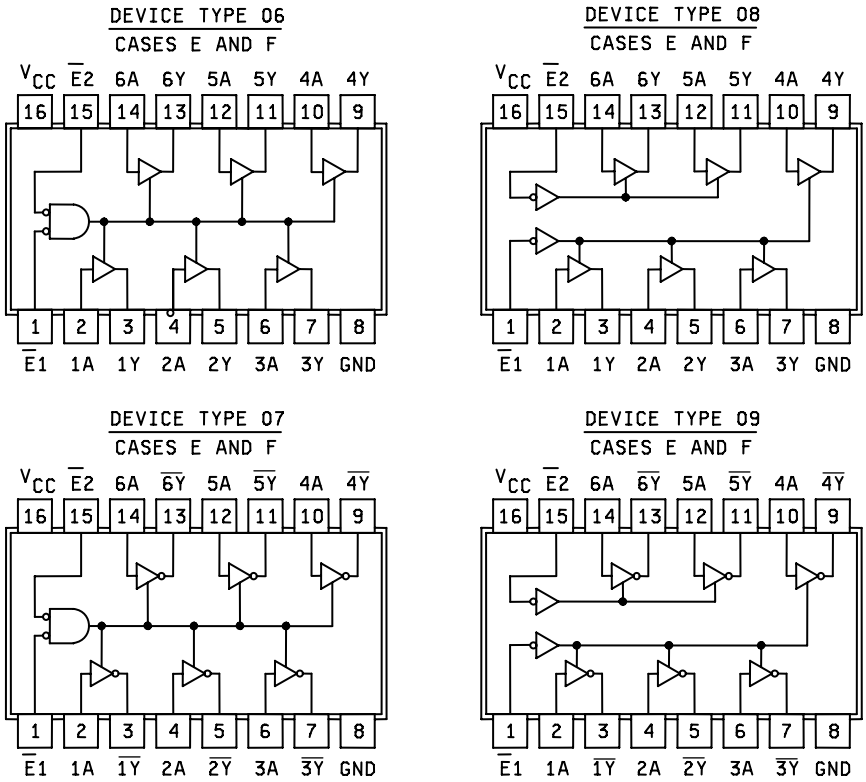


FIGURE 1. Logic diagrams and terminal connections – Continued.

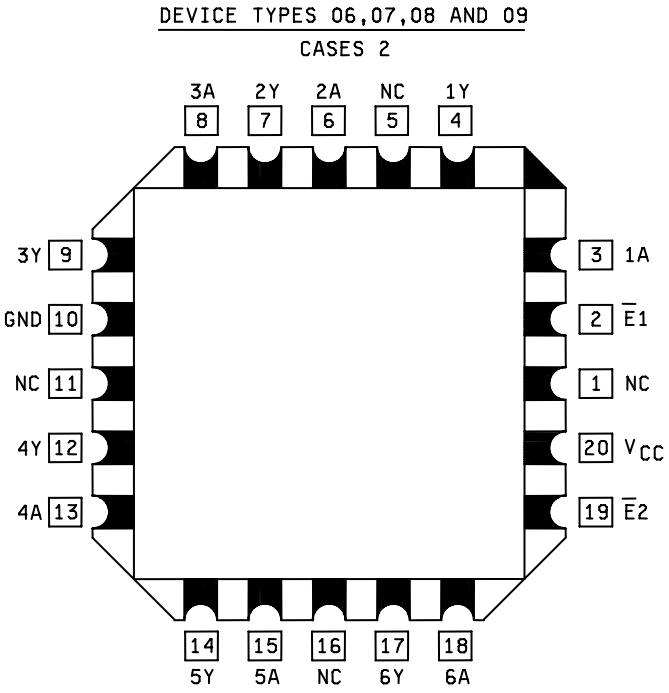


NOTE: Bars are added to the output symbols for case outline 2 of devices types 07 and 09.

FIGURE 1. Logic diagrams and terminal connections – Continued.

Device types 01, 02, 51, and 52

| Each gate | |
|---|---|
| Input | Output |
| A | $\overline{Y}$ |
| L | H |
| H | L |

Positive logic $\overline{Y}$ = A

Device types 03 and 53

| Each gate | | |
|---|---|---|
| Inputs | | Output |
| $\overline{G}$ | A | $\overline{Y}$ |
| L | H | L |
| L | L | H |
| H | X | Z |

Device types 04 and 54

| Each gate | | | | | |
|---|---|---|---|---|---|
| Inputs | | Output | Inputs | | Output |
| $\overline{1G}$ | 1A | 1Y | 2G | 2A | 2Y |
| L | L | L | L | L | Z |
| L | H | H | L | H | Z |
| H | L | Z | H | L | L |
| H | H | Z | H | H | H |

Device types 05 and 55

| Each gate | | | | | |
|---|---|---|---|---|---|
| Inputs | | Output | Inputs | | Output |
| $\overline{1G}$ | 1A | 1Y | $\overline{2G}$ | 2A | 2Y |
| L | L | L | L | L | L |
| L | H | H | L | H | H |
| H | L | Z | H | L | Z |
| H | H | Z | H | H | Z |

H = High level voltage
L = Low level voltage
Z = high impedance
X = Irrelevant

FIGURE 2. Truth tables.

Device types 10 and 60

| Each buffer | | | |
|---|---|---|---|
| Inputs | | | Output |
| $\overline{1G}$ | $\overline{2G}$ | A | $\overline{Y}$ |
| L | L | H | L |
| L | L | L | H |
| X | H | X | Z |
| H | X | X | Z |

Device types 11 and 61

| Each buffer | | | |
|---|---|---|---|
| Inputs | | | Output |
| $\overline{1G}$ | $\overline{2G}$ | A | Y |
| L | L | L | L |
| L | L | H | H |
| X | H | X | Z |
| H | X | X | Z |

Device type 06

| Each buffer | | | |
|---|---|---|---|
| Inputs | | | Output |
| $\overline{E1}$ | $\overline{E2}$ | A | Y |
| H | X | X | Z |
| X | H | X | Z |
| L | L | H | H |
| L | L | L | L |

H = High level voltage
L = Low level voltage
Z = high impedance
X = Irrelevant

FIGURE 2. Truth tables – Continued.

Device type 07

| Each buffer | | | |
|---|---|---|---|
| Inputs | | | Output |
| $\overline{E1}$ | $\overline{E2}$ | A | $\overline{Y}$ |
| H | X | X | Z |
| X | H | X | Z |
| L | L | H | L |
| L | L | L | H |

Device type 08

| Each buffer | | |
|---|---|---|
| Inputs | | Output |
| $\overline{E}$ | A | Y |
| H | X | Z |
| L | H | H |
| L | L | L |

Device type 09

| Each buffer | | |
|---|---|---|
| Inputs | | Output |
| $\overline{E}$ | A | $\overline{Y}$ |
| H | X | Z |
| L | H | L |
| L | L | H |

H = High level voltage
L = Low level voltage
Z = high impedance
X = Irrelevant

FIGURE 2. Truth tables – Continued.

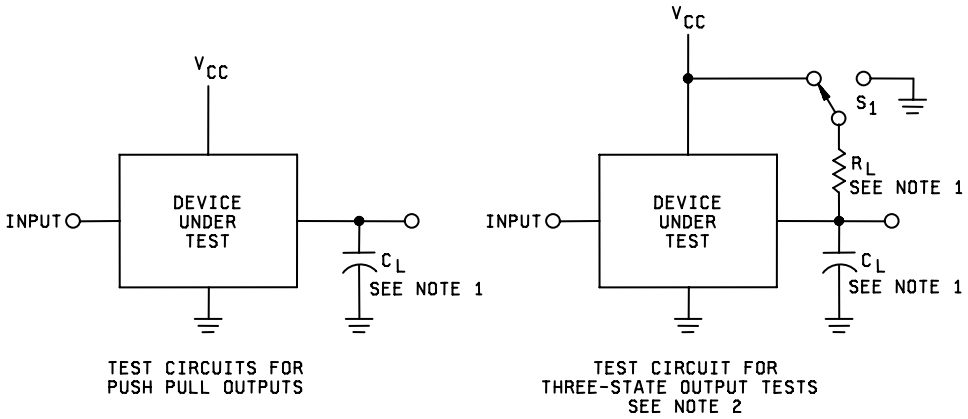


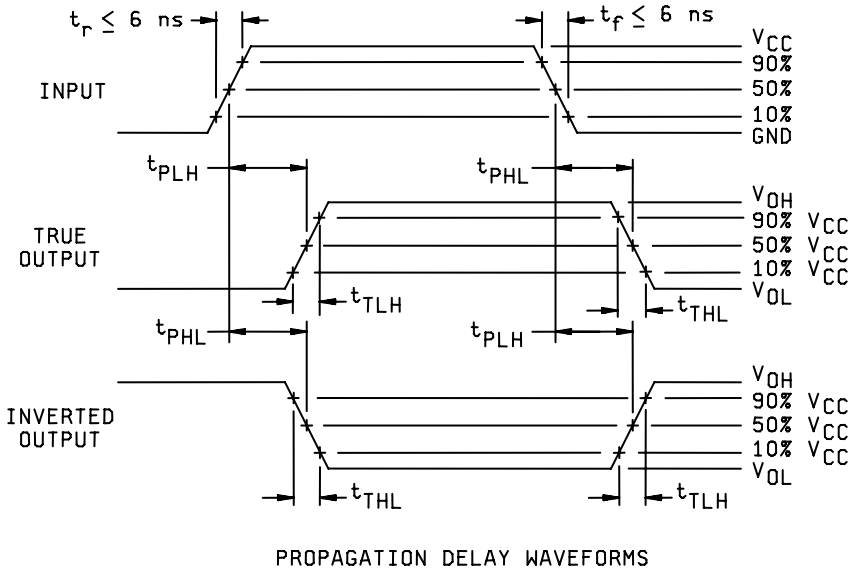


FIGURE 3. Switching time test circuit and waveforms.

Device types 03-11, 53-55, 60 and 61

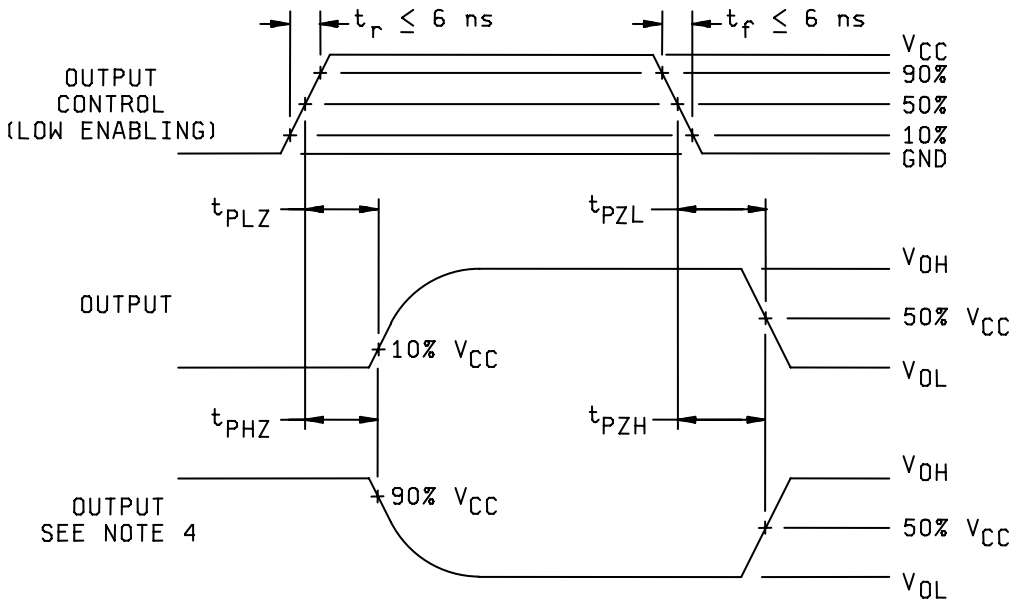


THREE-STATE OUTPUT ENABLE AND DISABLE WAVEFORMS

NOTES:

1. $C_L$ includes load and test jig capacitance. See table I for values of $C_L$ and $R_L$.
2. S1 = $V_{CC}$ for $t_{PZL}$ and $t_{PLZ}$ measurements. S1 = GND for $t_{PZH}$ and $t_{PHZ}$ measurements.
3. Waveform for negative edge sensitive circuits will be inverted.
4. This waveform is applicable to three-state switching time measurements.
5. The input signal for HCT device types (51-55, 60, 61) will be 0-3 volts; however, the 50% $V_{CC}$ measure point is 1.3 volts for input and output signals. The 10% $V_{CC}$ and 90% $V_{CC}$ points are 0.3V and 2.7V, respectively.

FIGURE 3. Switching time test circuit and waveforms – Continued.

Device type 11

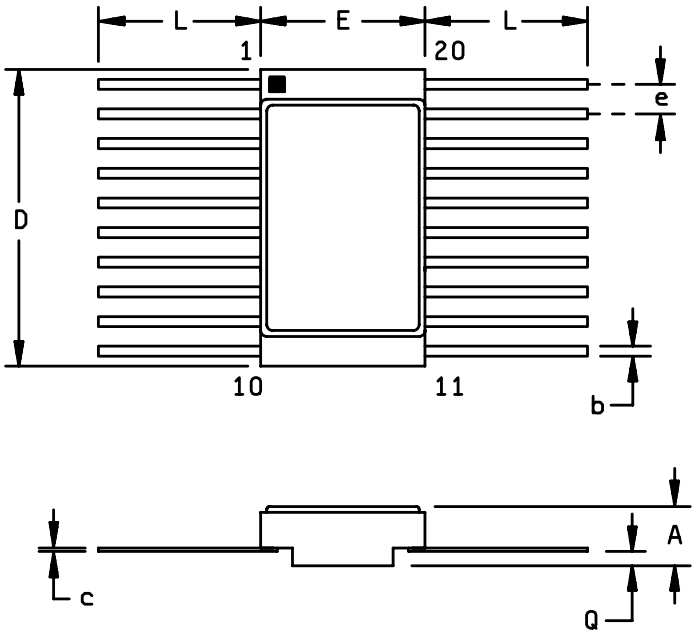


| Case outline X | | | | |
|---|---|---|---|---|
| Symbol | Inches | | Millimeters | |
| | Min | Max | Min | Max |
| A | .045 | .085 | 1.14 | 2.16 |
| b | .015 | .019 | 0.38 | 0.48 |
| c | .003 | .006 | 0.076 | 0.152 |
| D | .505 | .515 | 12.83 | 13.08 |
| E | .275 | .285 | 6.99 | 7.24 |
| e | .045 | .055 | 1.14 | 1.40 |
| L | .250 | .370 | 6.35 | 9.39 |
| Q | .010 | | 0.25 | |
| N | 20 | | 20 | |

FIGURE 4. Case outline X.

TABLE III. Group A inspection for device type 01.

| Symbol | MIL-STD-883 method | Case 2 | Terminal conditions 1/ 2 | 3 | 4 | 6 | 8 | 9 | 10 | 12 | 13 | 14 | 16 | 18 | 19 | 20 | Measured terminal | Test limits Subgroup 1 $T_C$ = +25°C | | Subgroup 2 $T_C$ = +125°C | | Subgroup 3 $T_C$ = -55°C | | Unit |
|---|---|---|---|---|---|---|---|---|---|---|---|---|---|---|---|---|---|---|---|---|---|---|---|---|
| | | C and D | 1 | 2 | 3 | 4 | 5 | 6 | 7 | 8 | 9 | 10 | 11 | 12 | 13 | 14 | | | | | | | | |
| | | Test no. | 1A | $\overline{1Y}$ | 2A | $\overline{2Y}$ | 3A | $\overline{3Y}$ | GND | $\overline{4Y}$ | 4A | $\overline{5Y}$ | 5A | $\overline{6Y}$ | 6A | $V_{CC}$ | | Min | Max | Min | Max | Min | Max | |
| $V_{IC}$ (pos) | | 1 | 1mA | | | | | | OPEN | | | | | | | GND | 1A | 1/ | 1.5 | | | | | V |
| | | 2 | | | 1mA | | | | " | | | | | | | " | 2A | " | " | | | | | " |
| | | 3 | | | | | 1mA | | " | | | | | | | " | 3A | " | " | | | | | " |
| | | 4 | | | | | | | " | | 1mA | | | | | " | 4A | " | " | | | | | " |
| | | 5 | | | | | | | " | | | | 1mA | | | " | 5A | " | " | | | | | " |
| | | 6 | | | | | | | " | | | | | | 1mA | " | 6A | " | " | | | | | " |
| $V_{IC}$ (neg) | | 7 | -1mA | | | | | | GND | | | | | | | OPEN | 1A | | -1.5 | | | | | " |
| | | 8 | | | -1mA | | | | " | | | | | | | " | 2A | | " | | | | | " |
| | | 9 | | | | | -1mA | | " | | | | | | | " | 3A | | " | | | | | " |
| | | 10 | | | | | | | " | | -1mA | | | | | " | 4A | | " | | | | | " |
| | | 11 | | | | | | | " | | | | -1mA | | | " | 5A | | " | | | | | " |
| | | 12 | | | | | | | " | | | | | | -1mA | " | 6A | | " | | | | | " |
| $I_{CC}$ | 3005 | 13 | GND | | GND | | GND | | " | | GND | | GND | | GND | 6V | $V_{CC}$ | | 0.1 | | 10 | | | µA |
| $I_{CC}$ | 3005 | 14 | 6V | | 6V | | 6V | | " | | 6V | | 6V | | 6V | " | $V_{CC}$ | | 0.1 | | 10 | | | µA |
| $V_{OH3}$ | 3006 | 15 | 1.2V | -20µA | | | | | " | | | | | | | " | $\overline{1Y}$ | 5.95 | | 5.95 | | 5.95 | | V |
| | | 16 | | | 1.2V | -20µA | | | " | | | | | | | " | $\overline{2Y}$ | " | | " | | " | | " |
| | | 17 | | | | | 1.2V | -20µA | " | | | | | | | " | $\overline{3Y}$ | " | | " | | " | | " |
| | | 18 | | | | | | | " | -20µA | 1.2V | | | | | " | $\overline{4Y}$ | " | | " | | " | | " |
| | | 19 | | | | | | | " | | | -20µA | 1.2V | | | " | $\overline{5Y}$ | " | | " | | " | | " |
| | | 20 | | | | | | | " | | | | | -20µA | 1.2V | " | $\overline{6Y}$ | " | | " | | " | | " |
| $V_{OH5}$ | 3006 | 21 | 1.2V | -5.2mA | | | | | " | | | | | | | " | $\overline{1Y}$ | 5.48 | | 5.2 | | 5.48 | | " |
| | | 22 | | | 1.2V | -5.2mA | | | " | | | | | | | " | $\overline{2Y}$ | " | | " | | " | | " |
| | | 23 | | | | | 1.2V | -5.2mA | " | | | | | | | " | $\overline{3Y}$ | " | | " | | " | | " |
| | | 24 | | | | | | | " | -5.2mA | 1.2V | | | | | " | $\overline{4Y}$ | " | | " | | " | | " |
| | | 25 | | | | | | | " | | | -5.2mA | 1.2V | | | " | $\overline{5Y}$ | " | | " | | " | | " |
| | | 26 | | | | | | | " | | | | | -5.2mA | 1.2V | " | $\overline{6Y}$ | " | | " | | " | | " |
| $V_{OL3}$ | 3007 | 27 | 4.2V | 20µA | | | | | " | | | | | | | " | $\overline{1Y}$ | | 0.05 | | 0.05 | | 0.05 | " |
| | | 28 | | | 4.2V | 20µA | | | " | | | | | | | " | $\overline{2Y}$ | | " | | " | | " | " |
| | | 29 | | | | | 4.2V | 20µA | " | | | | | | | " | $\overline{3Y}$ | | " | | " | | " | " |
| | | 30 | | | | | | | " | 20µA | 4.2V | | | | | " | $\overline{4Y}$ | | " | | " | | " | " |
| | | 31 | | | | | | | " | | | 20µA | 4.2V | | | " | $\overline{5Y}$ | | " | | " | | " | " |
| | | 32 | | | | | | | " | | | | | 20µA | 4.2V | " | $\overline{6Y}$ | | " | | " | | " | " |
| $V_{OL5}$ | 3007 | 33 | 4.2V | 5.2mA | | | | | " | | | | | | | " | $\overline{1Y}$ | | 0.26 | | 0.4 | | 0.26 | " |
| | | 34 | | | 4.2V | 5.2mA | | | " | | | | | | | " | $\overline{2Y}$ | | " | | " | | " | " |
| | | 35 | | | | | 4.2V | 5.2mA | " | | | | | | | " | $\overline{3Y}$ | | " | | " | | " | " |
| | | 36 | | | | | | | " | 5.2mA | 4.2V | | | | | " | $\overline{4Y}$ | | " | | " | | " | " |
| | | 37 | | | | | | | " | | | 5.2mA | 4.2V | | | " | $\overline{5Y}$ | | " | | " | | " | " |
| | | 38 | | | | | | | " | | | | | 5.2mA | 4.2V | " | $\overline{6Y}$ | | " | | " | | " | " |
| $I_{OS4}$ | 3011 | 39 | GND | GND | GND | | GND | | " | | GND | | GND | | GND | 4V | $\overline{1Y}$ | -10 | -120 | -10 | -120 | -10 | -120 | mA |
| | | 40 | " | | " | GND | " | | " | | " | | " | | " | " | $\overline{2Y}$ | " | " | " | " | " | " | " |
| | | 41 | " | | " | | " | GND | " | | " | | " | | " | " | $\overline{3Y}$ | " | " | " | " | " | " | " |
| | | 42 | " | | " | | " | | " | GND | " | | " | | " | " | $\overline{4Y}$ | " | " | " | " | " | " | " |
| | | 43 | " | | " | | " | | " | | " | GND | " | | " | " | $\overline{5Y}$ | " | " | " | " | " | " | " |
| | | 44 | " | | " | | " | | " | | " | | " | GND | " | " | $\overline{6Y}$ | " | " | " | " | " | " | " |
| $I_{IH}$ | 3010 | 45 | 6V | | " | | " | | " | | " | | " | | " | 6V | 1A | | .05 | | 0.1 | | | µA |
| | | 46 | GND | | 6V | | " | | " | | " | | " | | " | " | 2A | | " | | " | | | " |
| | | 47 | " | | GND | | 6V | | " | | " | | " | | " | " | 3A | | " | | " | | | " |
| | | 48 | " | | " | | GND | | " | | 6V | | " | | " | " | 4A | | " | | " | | | " |
| | | 49 | " | | " | | " | | " | | GND | | 6V | | " | " | 5A | | " | | " | | | " |
| | | 50 | " | | " | | " | | " | | GND | | GND | | 6V | " | 6A | | " | | " | | | " |

See footnotes at end of table.

TABLE III. Group A inspection for device type 01 – Continued.

| Symbol | MIL-STD-883 method | Case 2 | Terminal conditions 1/ | | | | | | | | | | | | | | Measured terminal | Test limits | | | | | | Unit |
|---|---|---|---|---|---|---|---|---|---|---|---|---|---|---|---|---|---|---|---|---|---|---|---|---|
| | | | 2 | 3 | 4 | 6 | 8 | 9 | 10 | 12 | 13 | 14 | 16 | 18 | 19 | 20 | | Subgroup 1 $T_C$ = +25°C | | Subgroup 2 $T_C$ = +125°C | | Subgroup 3 $T_C$ = -55°C | | |
| | | C and D | 1 | 2 | 3 | 4 | 5 | 6 | 7 | 8 | 9 | 10 | 11 | 12 | 13 | 14 | | | | | | | | |
| | | Test no. | 1A | $\overline{1Y}$ | 2A | $\overline{2Y}$ | 3A | $\overline{3Y}$ | GND | $\overline{4Y}$ | 4A | $\overline{5Y}$ | 5A | $\overline{6Y}$ | 6A | $V_{CC}$ | | Min | Max | Min | Max | Min | Max | |
| $I_{IL}$ | 3009 | 51 | GND | | 6V | | 6V | | GND | | 6V | | 6V | | 6V | 6V | 1A | | -.05 | | -0.1 | | | µA |
| | | 52 | 6V | | GND | | 6V | | " | | " | | " | | " | " | 2A | | " | | " | | | " |
| | | 53 | " | | 6V | | GND | | " | | " | | " | | " | " | 3A | | " | | " | | | " |
| | | 54 | " | | " | | 6V | | " | | GND | | " | | " | " | 4A | | " | | " | | | " |
| | | 55 | " | | " | | " | | " | | 6V | | GND | | " | " | 5A | | " | | " | | | " |
| | | 56 | " | | " | | " | | " | | 6V | | 6V | | GND | " | 6A | | " | | " | | | " |
| | | | | | | | | | | | | | | | | | | Subgroup 4 $T_C$ = +25°C | | | | | | |
| | | | | | | | | | | | | | | | | | | Min | Max | | | | | |
| $C_i$ | 3012 | 57 | 2/ | | | | | | GND | | | | | | | GND | 1A | | 10 | | | | | pF |
| | | 58 | | | 2/ | | | | " | | | | | | | " | 2A | | " | | | | | " |
| | | 59 | | | | | 2/ | | " | | | | | | | " | 3A | | " | | | | | " |
| | | 60 | | | | | | | " | | 2/ | | | | | " | 4A | | " | | | | | " |
| | | 61 | | | | | | | " | | | | 2/ | | | " | 5A | | " | | | | | " |
| | | 62 | | | | | | | " | | | | | | 2/ | " | 6A | | " | | | | | " |
| | | | | | | | | | | | | | | | | | | Subgroup 9 $T_C$ = +25°C | | Subgroup 10 $T_C$ = +125°C | | Subgroup 11 $T_C$ = -55°C | | |
| | | | | | | | | | | | | | | | | | | Min | Max | Min | Max | Min | Max | |
| $t_{PHL}$ | 3003 (Fig. 3) | 63 | IN | OUT | | | | | GND | | | | | | | 4.5V | 1A to $\overline{1Y}$ | 4 | 17 | 4 | 22 | 4 | 17 | ns |
| | | 64 | | | IN | OUT | | | " | | | | | | | " | 2A to $\overline{2Y}$ | " | " | " | " | " | " | " |
| | | 65 | | | | | IN | OUT | " | | | | | | | " | 3A to $\overline{3Y}$ | " | " | " | " | " | " | " |
| | | 66 | | | | | | | " | OUT | IN | | | | | " | 4A to $\overline{4Y}$ | " | " | " | " | " | " | " |
| | | 67 | | | | | | | " | | | OUT | IN | | | " | 5A to $\overline{5Y}$ | " | " | " | " | " | " | " |
| | | 68 | | | | | | | " | | | | | OUT | IN | " | 6A to $\overline{6Y}$ | " | " | " | " | " | " | " |
| $t_{PLH}$ | 3003 (Fig. 3) | 69 | IN | OUT | | | | | " | | | | | | | " | 1A to $\overline{1Y}$ | " | " | " | " | " | " | " |
| | | 70 | | | IN | OUT | | | " | | | | | | | " | 2A to $\overline{2Y}$ | " | " | " | " | " | " | " |
| | | 71 | | | | | IN | OUT | " | | | | | | | " | 3A to $\overline{3Y}$ | " | " | " | " | " | " | " |
| | | 72 | | | | | | | " | OUT | IN | | | | | " | 4A to $\overline{4Y}$ | " | " | " | " | " | " | " |
| | | 73 | | | | | | | " | | | OUT | IN | | | " | 5A to $\overline{5Y}$ | " | " | " | " | " | " | " |
| | | 74 | | | | | | | " | | | | | OUT | IN | " | 6A to $\overline{6Y}$ | " | " | " | " | " | " | " |
| $t_{THL}$ | 3004 (Fig. 3) | 75 | IN | OUT | | | | | " | | | | | | | " | $\overline{1Y}$ | 3 | 15 | 3 | 20 | 3 | 15 | " |
| | | 76 | | | IN | OUT | | | " | | | | | | | " | $\overline{2Y}$ | " | " | " | " | " | " | " |
| | | 77 | | | | | IN | OUT | " | | | | | | | " | $\overline{3Y}$ | " | " | " | " | " | " | " |
| | | 78 | | | | | | | " | OUT | IN | | | | | " | $\overline{4Y}$ | " | " | " | " | " | " | " |
| | | 79 | | | | | | | " | | | OUT | IN | | | " | $\overline{5Y}$ | " | " | " | " | " | " | " |
| | | 80 | | | | | | | " | | | | | OUT | IN | " | $\overline{6Y}$ | " | " | " | " | " | " | " |
| $t_{TLH}$ | 3004 (Fig. 3) | 81 | IN | OUT | | | | | " | | | | | | | " | $\overline{1Y}$ | " | " | " | " | " | " | " |
| | | 82 | | | IN | OUT | | | " | | | | | | | " | $\overline{2Y}$ | " | " | " | " | " | " | " |
| | | 83 | | | | | IN | OUT | " | | | | | | | " | $\overline{3Y}$ | " | " | " | " | " | " | " |
| | | 84 | | | | | | | " | OUT | IN | | | | | " | $\overline{4Y}$ | " | " | " | " | " | " | " |
| | | 85 | | | | | | | " | | | OUT | IN | | | " | $\overline{5Y}$ | " | " | " | " | " | " | " |
| | | 86 | | | | | | | " | | | | | OUT | IN | " | $\overline{6Y}$ | " | " | " | " | " | " | " |

See footnotes at end of table.

TABLE III. Group A inspection for device type 02.

| Symbol | MIL-STD-883 method | Case | Terminal conditions 1/ | | | | | | | | | | | | | | Measured terminal | Test limits | | | | | | Unit |
|---|---|---|---|---|---|---|---|---|---|---|---|---|---|---|---|---|---|---|---|---|---|---|---|---|
| | | 2 | 2 | 3 | 4 | 6 | 8 | 9 | 10 | 12 | 13 | 14 | 16 | 18 | 19 | 20 | | Subgroup 1 $T_C$ = +25°C | | Subgroup 2 $T_C$ = +125°C | | Subgroup 3 $T_C$ = -55°C | | |
| | | C and D | 1 | 2 | 3 | 4 | 5 | 6 | 7 | 8 | 9 | 10 | 11 | 12 | 13 | 14 | | | | | | | | |
| | | Test no. | 1A | $\overline{1Y}$ | 2A | $\overline{2Y}$ | 3A | $\overline{3Y}$ | GND | $\overline{4Y}$ | 4A | $\overline{5Y}$ | 5A | $\overline{6Y}$ | 6A | $V_{CC}$ | | Min | Max | Min | Max | Min | Max | |
| $V_{IC}$ (pos) | | 1 | 1mA | | | | | | OPEN | | | | | | | GND | 1A | 1/ | 1.5 | | | | | V |
| | | 2 | | | 1mA | | | | " | | | | | | | " | 2A | " | " | | | | | " |
| | | 3 | | | | | 1mA | | " | | | | | | | " | 3A | " | " | | | | | " |
| | | 4 | | | | | | | " | | 1mA | | | | | " | 4A | " | " | | | | | " |
| | | 5 | | | | | | | " | | | | 1mA | | | " | 5A | " | " | | | | | " |
| | | 6 | | | | | | | " | | | | | | 1mA | " | 6A | " | " | | | | | " |
| $V_{IC}$ (neg) | | 7 | -1mA | | | | | | GND | | | | | | | OPEN | 1A | | " | | | | | V |
| | | 8 | | | -1mA | | | | " | | | | | | | " | 2A | | " | | | | | " |
| | | 9 | | | | | -1mA | | " | | | | | | | " | 3A | | " | | | | | " |
| | | 10 | | | | | | | " | | -1mA | | | | | " | 4A | | " | | | | | " |
| | | 11 | | | | | | | " | | | | -1mA | | | " | 5A | | " | | | | | " |
| | | 12 | | | | | | | " | | | | | | -1mA | " | 6A | | " | | | | | " |
| $I_{CC}$ | 3005 | 13 | GND | | GND | | GND | | " | | GND | | GND | | GND | 6V | $V_{CC}$ | | 0.1 | | 10 | | | µA |
| $I_{CC}$ | 3005 | 14 | 6V | | 6V | | 6V | | " | | 6V | | 6V | | 6V | " | $V_{CC}$ | | 0.1 | | 10 | | | µA |
| $V_{OH3}$ | 3006 | 15 | 1.2V | -20µA | | | | | " | | | | | | | " | $\overline{1Y}$ | 5.95 | | 5.95 | | 5.95 | | V |
| | | 16 | | | 1.2V | -20µA | | | " | | | | | | | " | $\overline{2Y}$ | " | | " | | " | | " |
| | | 17 | | | | | 1.2V | -20µA | " | | | | | | | " | $\overline{3Y}$ | " | | " | | " | | " |
| | | 18 | | | | | | | " | -20µA | 1.2V | | | | | " | $\overline{4Y}$ | " | | " | | " | | " |
| | | 19 | | | | | | | " | | | -20µA | 1.2V | | | " | $\overline{5Y}$ | " | | " | | " | | " |
| | | 20 | | | | | | | " | | | | | -20µA | 1.2V | " | $\overline{6Y}$ | " | | " | | " | | " |
| $V_{OH5}$ | 3006 | 21 | 1.2V | -5.2mA | | | | | " | | | | | | | " | $\overline{1Y}$ | 5.48 | | 5.2 | | 5.48 | | " |
| | | 22 | | | 1.2V | -5.2mA | | | " | | | | | | | " | $\overline{2Y}$ | " | | " | | " | | " |
| | | 23 | | | | | 1.2V | -5.2mA | " | | | | | | | " | $\overline{3Y}$ | " | | " | | " | | " |
| | | 24 | | | | | | | " | -5.2mA | 1.2V | | | | | " | $\overline{4Y}$ | " | | " | | " | | " |
| | | 25 | | | | | | | " | | | -5.2mA | 1.2V | | | " | $\overline{5Y}$ | " | | " | | " | | " |
| | | 26 | | | | | | | " | | | | | -5.2mA | 1.2V | " | $\overline{6Y}$ | " | | " | | " | | " |
| $V_T$ - | 3006 | 27 | 3/ | OUT | | | | | " | | | | | | | " | $\overline{1Y}$ | 1.2 | 3.2 | 1.2 | 3.2 | 1.2 | 3.2 | " |
| | | 28 | | | 3/ | OUT | | | " | | | | | | | " | $\overline{2Y}$ | " | " | " | " | " | " | " |
| | | 29 | | | | | 3/ | OUT | " | | | | | | | " | $\overline{3Y}$ | " | " | " | " | " | " | " |
| | | 30 | | | | | | | " | OUT | 3/ | | | | | " | $\overline{4Y}$ | " | " | " | " | " | " | " |
| | | 31 | | | | | | | " | | | OUT | 3/ | | | " | $\overline{5Y}$ | " | " | " | " | " | " | " |
| | | 32 | | | | | | | " | | | | | OUT | 3/ | " | $\overline{6Y}$ | " | " | " | " | " | " | " |
| $V_{OL3}$ | 3007 | 33 | 4.2V | 20µA | | | | | " | | | | | | | " | $\overline{1Y}$ | | 0.05 | | 0.05 | | 0.05 | " |
| | | 34 | | | 4.2V | 20µA | | | " | | | | | | | " | $\overline{2Y}$ | | " | | " | | " | " |
| | | 35 | | | | | 4.2V | 20µA | " | | | | | | | " | $\overline{3Y}$ | | " | | " | | " | " |
| | | 36 | | | | | | | " | 20µA | 4.2V | | | | | " | $\overline{4Y}$ | | " | | " | | " | " |
| | | 37 | | | | | | | " | | | 20µA | 4.2V | | | " | $\overline{5Y}$ | | " | | " | | " | " |
| | | 38 | | | | | | | " | | | | | 20µA | 4.2V | " | $\overline{6Y}$ | | " | | " | | " | " |
| $V_{OL5}$ | 3007 | 39 | 4.2V | 5.2mA | | | | | " | | | | | | | " | $\overline{1Y}$ | | 0.26 | | 0.4 | | 0.26 | " |
| | | 40 | | | 4.2V | 5.2mA | | | " | | | | | | | " | $\overline{2Y}$ | | " | | " | | " | " |
| | | 41 | | | | | 4.2V | 5.2mA | " | | | | | | | " | $\overline{3Y}$ | | " | | " | | " | " |
| | | 42 | | | | | | | " | 5.2mA | 4.2V | | | | | " | $\overline{4Y}$ | | " | | " | | " | " |
| | | 43 | | | | | | | " | | | 5.2mA | 4.2V | | | " | $\overline{5Y}$ | | " | | " | | " | " |
| | | 44 | | | | | | | " | | | | | 5.2mA | 4.2V | " | $\overline{6Y}$ | | " | | " | | " | " |
| $V_T$+ | 3006 | 45 | 4/ | OUT | | | | | " | | | | | | | " | $\overline{1Y}$ | 2.1 | 4.2 | 2.1 | 4.2 | 2.1 | 4.2 | " |
| | | 46 | | | 4/ | OUT | | | " | | | | | | | " | $\overline{2Y}$ | " | " | " | " | " | " | " |
| | | 47 | | | | | 4/ | OUT | " | | | | | | | " | $\overline{3Y}$ | " | " | " | " | " | " | " |
| | | 48 | | | | | | | " | OUT | 4/ | | | | | " | $\overline{4Y}$ | " | " | " | " | " | " | " |
| | | 49 | | | | | | | " | | | OUT | 4/ | | | " | $\overline{5Y}$ | " | " | " | " | " | " | " |
| | | 50 | | | | | | | " | | | | | OUT | 4/ | " | $\overline{6Y}$ | " | " | " | " | " | " | " |

See footnotes at end of table.

TABLE III. Group A inspection for device type 02 – Continued.

| Symbol | MIL-STD-883 method | Case | Terminal conditions 1/ | | | | | | | | | | | | | | Measured terminal | Test limits | | | | | | Unit |
|---|---|---|---|---|---|---|---|---|---|---|---|---|---|---|---|---|---|---|---|---|---|---|---|---|
| | | 2 | 2 | 3 | 4 | 6 | 8 | 9 | 10 | 12 | 13 | 14 | 16 | 18 | 19 | 20 | | Subgroup 1 | | Subgroup 2 | | Subgroup 3 | | |
| | | C and D | 1 | 2 | 3 | 4 | 5 | 6 | 7 | 8 | 9 | 10 | 11 | 12 | 13 | 14 | | $T_C$ = +25°C | | $T_C$ = +125°C | | $T_C$ = -55°C | | |
| | | Test no. | 1A | $\overline{1Y}$ | 2A | $\overline{2Y}$ | 3A | $\overline{3Y}$ | GND | $\overline{4Y}$ | 4A | $\overline{5Y}$ | 5A | $\overline{6Y}$ | 6A | $V_{CC}$ | | Min | Max | Min | Max | Min | Max | |
| $V_H$ | | 51 | 5/ | | | | | | GND | | | | | | | 6V | $\overline{1Y}$ | 0.5 | 2.5 | 0.5 | 2.5 | 0.5 | 2.5 | V |
| | | 52 | | | 5/ | | | | " | | | | | | | " | $\overline{2Y}$ | " | " | " | " | " | " | " |
| | | 53 | | | | | 5/ | | " | | | | | | | " | $\overline{3Y}$ | " | " | " | " | " | " | " |
| | | 54 | | | | | | | " | | 5/ | | | | | " | $\overline{4Y}$ | " | " | " | " | " | " | " |
| | | 55 | | | | | | | " | | | | 5/ | | | " | $\overline{5Y}$ | " | " | " | " | " | " | " |
| | | 56 | | | | | | | " | | | | | | 5/ | " | $\overline{6Y}$ | " | " | " | " | " | " | " |
| $I_{OS4}$ | 3011 | 57 | GND | GND | GND | | GND | | " | | GND | | GND | | GND | 4V | $\overline{1Y}$ | -10 | -120 | -10 | -120 | -10 | -120 | mA |
| | | 58 | " | | " | GND | " | | " | | " | | " | | " | " | $\overline{2Y}$ | " | " | " | " | " | " | " |
| | | 59 | " | | " | | " | GND | " | | " | | " | | " | " | $\overline{3Y}$ | " | " | " | " | " | " | " |
| | | 60 | " | | " | | " | | " | GND | " | | " | | " | " | $\overline{4Y}$ | " | " | " | " | " | " | " |
| | | 61 | " | | " | | " | | " | | " | GND | " | | " | " | $\overline{5Y}$ | " | " | " | " | " | " | " |
| | | 62 | " | | " | | " | | " | | " | | " | GND | " | " | $\overline{6Y}$ | " | " | " | " | " | " | " |
| $I_{IH}$ | 3010 | 63 | 6V | | " | | " | | " | | " | | " | | " | 6V | 1A | | .05 | | 0.1 | | | µA |
| | | 64 | GND | | 6V | | " | | " | | " | | " | | " | " | 2A | | " | | " | | | " |
| | | 65 | " | | GND | | 6V | | " | | " | | " | | " | " | 3A | | " | | " | | | " |
| | | 66 | " | | " | | GND | | " | | 6V | | " | | " | " | 4A | | " | | " | | | " |
| | | 67 | " | | " | | " | | " | | GND | | 6V | | " | " | 5A | | " | | " | | | " |
| | | 68 | " | | " | | " | | " | | GND | | GND | | 6V | " | 6A | | " | | " | | | " |
| $I_{IL}$ | 3009 | 69 | " | | 6V | | 6V | | GND | | 6V | | 6V | | " | 6V | 1A | | -.05 | | -0.1 | | | µA |
| | | 70 | 6V | | GND | | 6V | | " | | " | | " | | " | " | 2A | | " | | " | | | " |
| | | 71 | " | | 6V | | GND | | " | | " | | " | | " | " | 3A | | " | | " | | | " |
| | | 72 | " | | " | | 6V | | " | | GND | | " | | " | " | 4A | | " | | " | | | " |
| | | 73 | " | | " | | " | | " | | 6V | | GND | | " | " | 5A | | " | | " | | | " |
| | | 74 | " | | " | | " | | " | | 6V | | 6V | | GND | " | 6A | | " | | " | | | " |
| | | | | | | | | | | | | | | | | | | Subgroup 4 $T_C$ = +25°C | | | | | | |
| | | | | | | | | | | | | | | | | | | Min | Max | | | | | |
| $C_i$ | 3012 | 75 | 2/ | | | | | | GND | | | | | | | GND | 1A | | 10 | | | | | pF |
| | | 76 | | | 2/ | | | | " | | | | | | | " | 2A | | " | | | | | " |
| | | 77 | | | | | 2/ | | " | | | | | | | " | 3A | | " | | | | | " |
| | | 78 | | | | | | | " | | 2/ | | | | | " | 4A | | " | | | | | " |
| | | 79 | | | | | | | " | | | | 2/ | | | " | 5A | | " | | | | | " |
| | | 80 | | | | | | | " | | | | | | 2/ | " | 6A | | " | | | | | " |
| | | | | | | | | | | | | | | | | | | Subgroup 9 $T_C$ = +25°C | | Subgroup 10 $T_C$ = +125°C | | Subgroup 11 $T_C$ = -55°C | | |
| | | | | | | | | | | | | | | | | | | Min | Max | Min | Max | Min | Max | |
| $t_{PHL}$ | 3003 (Fig. 3) | 81 | IN | OUT | | | | | GND | | | | | | | 4.5V | 1A to $\overline{1Y}$ | 8 | 25 | 8 | 33 | 8 | 25 | ns |
| | | 82 | | | IN | OUT | | | " | | | | | | | " | 2A to $\overline{2Y}$ | " | " | " | " | " | " | " |
| | | 83 | | | | | IN | OUT | " | | | | | | | " | 3A to $\overline{3Y}$ | " | " | " | " | " | " | " |
| | | 84 | | | | | | | " | OUT | IN | | | | | " | 4A to $\overline{4Y}$ | " | " | " | " | " | " | " |
| | | 85 | | | | | | | " | | | OUT | IN | | | " | 5A to $\overline{5Y}$ | " | " | " | " | " | " | " |
| | | 86 | | | | | | | " | | | | | OUT | IN | " | 6A to $\overline{6Y}$ | " | " | " | " | " | " | " |
| $t_{PHL}$ | 3003 (Fig. 3) | 87 | IN | OUT | | | | | " | | | | | | | " | 1A to $\overline{1Y}$ | " | " | " | " | " | " | " |
| | | 88 | | | IN | OUT | | | " | | | | | | | " | 2A to $\overline{2Y}$ | " | " | " | " | " | " | " |
| | | 89 | | | | | IN | OUT | " | | | | | | | " | 3A to $\overline{3Y}$ | " | " | " | " | " | " | " |
| | | 90 | | | | | | | " | OUT | IN | | | | | " | 4A to $\overline{4Y}$ | " | " | " | " | " | " | " |
| | | 91 | | | | | | | " | | | OUT | IN | | | " | 5A to $\overline{5Y}$ | " | " | " | " | " | " | " |
| | | 92 | | | | | | | " | | | | | OUT | IN | " | 6A to $\overline{6Y}$ | " | " | " | " | " | " | " |

See footnotes at end of table.

TABLE III. Group A inspection for device type 02 – Continued.

| Symbol | MIL-STD-883 method | Case | Terminal conditions 1/ | | | | | | | | | | | | | | Measured terminal | Test limits | | | | | | Unit |
|---|---|---|---|---|---|---|---|---|---|---|---|---|---|---|---|---|---|---|---|---|---|---|---|---|
| | | 2 | 2 | 3 | 4 | 6 | 8 | 9 | 10 | 12 | 13 | 14 | 16 | 18 | 19 | 20 | | Subgroup 9 | | Subgroup 10 | | Subgroup 11 | | |
| | | C and D | 1 | 2 | 3 | 4 | 5 | 6 | 7 | 8 | 9 | 10 | 11 | 12 | 13 | 14 | | $T_C$ = +25°C | | $T_C$ = +125°C | | $T_C$ = -55°C | | |
| | | Test no. | 1A | $\overline{1Y}$ | 2A | $\overline{2Y}$ | 3A | $\overline{3Y}$ | GND | $\overline{4Y}$ | 4A | $\overline{5Y}$ | 5A | $\overline{6Y}$ | 6A | $V_{CC}$ | | Min | Max | Min | Max | Min | Max | |
| $t_{THL}$ | 3004 (Fig. 3) | 93 | IN | OUT | | | | | GND | | | | | | | 4.5V | $\overline{1Y}$ | 3 | 15 | 3 | 20 | 3 | 15 | ns |
| | | 94 | | | IN | OUT | | | “ | | | | | | | “ | $\overline{2Y}$ | “ | “ | “ | “ | “ | “ | “ |
| | | 95 | | | | | IN | OUT | “ | | | | | | | “ | $\overline{3Y}$ | “ | “ | “ | “ | “ | “ | “ |
| | | 96 | | | | | | | “ | OUT | IN | | | | | “ | $\overline{4Y}$ | “ | “ | “ | “ | “ | “ | “ |
| | | 97 | | | | | | | “ | | | OUT | IN | | | “ | $\overline{5Y}$ | “ | “ | “ | “ | “ | “ | “ |
| | | 98 | | | | | | | “ | | | | | OUT | IN | ” | $\overline{6Y}$ | “ | “ | “ | “ | “ | “ | “ |
| $t_{TLH}$ | 3004 (Fig. 3) | 99 | IN | OUT | | | | | “ | | | | | | | “ | $\overline{1Y}$ | “ | “ | “ | “ | “ | “ | “ |
| | | 100 | | | IN | OUT | | | “ | | | | | | | “ | $\overline{2Y}$ | “ | “ | “ | “ | “ | “ | “ |
| | | 101 | | | | | IN | OUT | “ | | | | | | | “ | $\overline{3Y}$ | “ | “ | “ | “ | “ | “ | “ |
| | | 102 | | | | | | | “ | OUT | IN | | | | | “ | $\overline{4Y}$ | “ | “ | “ | “ | “ | “ | “ |
| | | 103 | | | | | | | “ | | | OUT | IN | | | “ | $\overline{5Y}$ | “ | “ | “ | “ | “ | “ | “ |
| | | 104 | | | | | | | “ | | | | | OUT | IN | ” | $\overline{6Y}$ | “ | “ | “ | “ | “ | “ | “ |

See footnotes at end of table.

TABLE III. Group A inspection for device type 03.

| Symbol | MIL-STD-883 method | Cases R, S, and 2 | Terminal conditions 1/ | | | | | | | | | | | | | | | | | | | | Measured terminal | Test limits | | | | | | Unit |
|---|---|---|---|---|---|---|---|---|---|---|---|---|---|---|---|---|---|---|---|---|---|---|---|---|---|---|---|---|---|---|
| | | | 1 | 2 | 3 | 4 | 5 | 6 | 7 | 8 | 9 | 10 | 11 | 12 | 13 | 14 | 15 | 16 | 17 | 18 | 19 | 20 | | Subgroup 1 $T_C$ = +25°C | | Subgroup 2 $T_C$ = +125°C | | Subgroup 3 $T_C$ = -55°C | | |
| | | Test no. | $\overline{1G}$ | 1A1 | $\overline{2Y4}$ | 1A2 | $\overline{2Y3}$ | 1A3 | $\overline{2Y2}$ | 1A4 | $\overline{2Y1}$ | GND | 2A1 | $\overline{1Y4}$ | 2A2 | $\overline{1Y3}$ | 2A3 | $\overline{1Y2}$ | 2A4 | $\overline{1Y1}$ | $\overline{2G}$ | $V_{CC}$ | | Min | Max | Min | Max | Min | Max | |
| $V_{IC}$ (pos) | | 1 | 1mA | | | | | | | | | OPEN | | | | | | | | | | GND | $\overline{1G}$ | 1/ | 1.5 | | | | | V |
| | | 2 | | 1mA | | | | | | | | " | | | | | | | | | | " | 1A1 | " | " | | | | | " |
| | | 3 | | | | 1mA | | | | | | " | | | | | | | | | | " | 1A2 | " | " | | | | | " |
| | | 4 | | | | | | 1mA | | | | " | | | | | | | | | | " | 1A3 | " | " | | | | | " |
| | | 5 | | | | | | | | 1mA | | " | | | | | | | | | | " | 1A4 | " | " | | | | | " |
| | | 6 | | | | | | | | | | " | 1mA | | | | | | | | | " | 2A1 | " | " | | | | | " |
| | | 7 | | | | | | | | | | " | | | 1mA | | | | | | | " | 2A2 | " | " | | | | | " |
| | | 8 | | | | | | | | | | " | | | | | 1mA | | | | | " | 2A3 | " | " | | | | | " |
| | | 9 | | | | | | | | | | " | | | | | | | 1mA | | | " | $\overline{2A4}$ | " | " | | | | | " |
| | | 10 | | | | | | | | | | " | | | | | | | | | 1mA | " | $\overline{2G}$ | " | " | | | | | " |
| $V_{IC}$ (neg) | | 11 | -1mA | | | | | | | | | GND | | | | | | | | | | OPEN | $\overline{1G}$ | | -1.5 | | | | | " |
| | | 12 | | -1mA | | | | | | | | " | | | | | | | | | | " | 1A1 | | " | | | | | " |
| | | 13 | | | | -1mA | | | | | | " | | | | | | | | | | " | 1A2 | | " | | | | | " |
| | | 14 | | | | | | -1mA | | | | " | | | | | | | | | | " | 1A3 | | " | | | | | " |
| | | 15 | | | | | | | | -1mA | | " | | | | | | | | | | " | 1A4 | | " | | | | | " |
| | | 16 | | | | | | | | | | " | -1mA | | | | | | | | | " | 2A1 | | " | | | | | " |
| | | 17 | | | | | | | | | | " | | | -1mA | | | | | | | " | 2A2 | | " | | | | | " |
| | | 18 | | | | | | | | | | " | | | | | -1mA | | | | | " | 2A3 | | " | | | | | " |
| | | 19 | | | | | | | | | | " | | | | | | | -1mA | | | " | $\overline{2A4}$ | | " | | | | | " |
| | | 20 | | | | | | | | | | | | | | | | | | | -1mA | " | $\overline{2G}$ | | " | | | | | " |
| $I_{CC}$ | 3005 | 21 | GND | GND | | GND | | GND | | GND | | " | GND | | GND | | GND | | GND | | GND | 6V | $V_{CC}$ | | 0.2 | | 20 | | | µA |
| $I_{CC}$ | 3005 | 22 | GND | 6V | | 6V | | 6V | | 6V | | " | 6V | | 6V | | 6V | | 6V | | " | " | " | | 0.2 | | 20 | | | " |
| $I_{CCZ}$ | | 23 | 6V | 6V | | 6V | | 6V | | 6V | | " | GND | | GND | | GND | | GND | | " | " | " | | 0.1 | | 10 | | | " |
| | | 24 | GND | GND | | GND | | GND | | GND | | " | 6V | | 6V | | 6V | | 6V | | 6V | " | " | | 0.1 | | 10 | | | " |
| $V_{OH3}$ | 3006 | 25 | 1.2V | 1.2V | | | | | | | | " | | | | | | | | -20µA | | 6V | $\overline{1Y1}$ | 5.95 | | 5.95 | | 5.95 | | V |
| | | 26 | " | | | 1.2V | | | | | | " | | | | | | -20µA | | | | " | $\overline{1Y2}$ | " | | " | | " | | " |
| | | 27 | " | | | | | 1.2V | | | | " | | | | -20µA | | | | | | " | $\overline{1Y3}$ | " | | " | | " | | " |
| | | 28 | " | | | | | | | 1.2V | | " | | -20µA | | | | | | | | " | $\overline{1Y4}$ | " | | " | | " | | " |
| | | 29 | | | | | | | | | -20µA | " | 1.2V | | | | | | | | 1.2V | " | $\overline{2Y1}$ | " | | " | | " | | " |
| | | 30 | | | | | | | -20µA | | | " | | | 1.2V | | | | | | " | " | $\overline{2Y2}$ | " | | " | | " | | " |
| | | 31 | | | | | -20µA | | | | | " | | | | | 1.2V | | | | " | " | $\overline{2Y3}$ | " | | " | | " | | " |
| | | 32 | | | -20µA | | | | | | | " | | | | | | | 1.2V | | " | " | $\overline{2Y4}$ | " | | " | | " | | " |
| $V_{OH5}$ | 3006 | 33 | 1.2V | 1.2V | | | | | | | | " | | | | | | | | -7.8mA | | " | $\overline{1Y1}$ | 5.48 | | 5.2 | | 5.48 | | " |
| | | 34 | " | | | 1.2V | | | | | | " | | | | | | -7.8mA | | | | " | $\overline{1Y2}$ | " | | " | | " | | " |
| | | 35 | " | | | | | 1.2V | | | | " | | | | -7.8mA | | | | | | " | $\overline{1Y3}$ | " | | " | | " | | " |
| | | 36 | " | | | | | | | 1.2V | | " | | -7.8mA | | | | | | | | " | $\overline{1Y4}$ | " | | " | | " | | " |
| | | 37 | | | | | | | | | -7.8mA | " | 1.2V | | | | | | | | 1.2V | " | $\overline{2Y1}$ | " | | " | | " | | " |
| | | 38 | | | | | | | -7.8mA | | | " | | | 1.2V | | | | | | " | " | $\overline{2Y2}$ | " | | " | | " | | " |
| | | 39 | | | | | -7.8mA | | | | | " | | | | | 1.2V | | | | " | " | $\overline{2Y3}$ | " | | " | | " | | " |
| | | 40 | | | -7.8mA | | | | | | | " | | | | | | | 1.2V | | " | " | $\overline{2Y4}$ | " | | " | | " | | " |
| $V_{OL3}$ | 3007 | 41 | 1.2V | 4.2V | | | | | | | | " | | | | | | | | 20µA | | " | $\overline{1Y1}$ | | 0.05 | | 0.05 | | 0.05 | " |
| | | 42 | " | | | 4.2V | | | | | | " | | | | | | 20µA | | | | " | $\overline{1Y2}$ | | " | | " | | " | " |
| | | 43 | " | | | | | 4.2V | | | | " | | | | 20µA | | | | | | " | $\overline{1Y3}$ | | " | | " | | " | " |
| | | 44 | " | | | | | | | 4.2V | | " | | 20µA | | | | | | | | " | $\overline{1Y4}$ | | " | | " | | " | " |
| | | 45 | | | | | | | | | 20µA | " | 4.2V | | | | | | | | 1.2V | " | $\overline{2Y1}$ | | " | | " | | " | " |
| | | 46 | | | | | | | 20µA | | | " | | | 4.2V | | | | | | " | " | $\overline{2Y2}$ | | " | | " | | " | " |
| | | 47 | | | | | 20µA | | | | | " | | | | | 4.2V | | | | " | " | $\overline{2Y3}$ | | " | | " | | " | " |
| | | 48 | | | 20µA | | | | | | | " | | | | | | | 4.2V | | " | " | $\overline{2Y4}$ | | " | | " | | " | " |

See footnotes at end of table.

TABLE III. Group A inspection for device type 03 – Continued.

| Symbol | MIL-STD-883 method | Cases R, S, and 2 | Terminal conditions 1/ | | | | | | | | | | | | | | | | | | | | Measured terminal | Test limits | | | | | | Unit |
|---|---|---|---|---|---|---|---|---|---|---|---|---|---|---|---|---|---|---|---|---|---|---|---|---|---|---|---|---|---|---|
| | | | 1 | 2 | 3 | 4 | 5 | 6 | 7 | 8 | 9 | 10 | 11 | 12 | 13 | 14 | 15 | 16 | 17 | 18 | 19 | 20 | | Subgroup 1 $T_C$ = +25°C | | Subgroup 2 $T_C$ = +125°C | | Subgroup 3 $T_C$ = -55°C | | |
| | | Test no. | $\overline{1G}$ | 1A1 | $\overline{2Y4}$ | 1A2 | $\overline{2Y3}$ | 1A3 | $\overline{2Y2}$ | 1A4 | $\overline{2Y1}$ | GND | 2A1 | $\overline{1Y4}$ | 2A2 | $\overline{1Y3}$ | 2A3 | $\overline{1Y2}$ | 2A4 | $\overline{1Y1}$ | $\overline{2G}$ | $V_{CC}$ | | Min | Max | Min | Max | Min | Max | |
| $V_{OL5}$ | 3006 | 49 | 1.2V | 4.2V | | | | | | | | GND | | | | | | | | 7.8mA | | 6V | $\overline{1Y1}$ | | 0.26 | | 0.4 | | 0.26 | V |
| | | 50 | " | | | 4.2V | | | | | | " | | | | | | 7.8mA | | | | " | $\overline{1Y2}$ | | " | | " | | " | " |
| | | 51 | " | | | | | 4.2V | | | | " | | | | 7.8mA | | | | | | " | $\overline{1Y3}$ | | " | | " | | " | " |
| | | 52 | " | | | | | | | 4.2V | | " | | 7.8mA | | | | | | | | " | $\overline{1Y4}$ | | " | | " | | " | " |
| | | 53 | | | | | | | | | 7.8mA | " | 4.2V | | | | | | | | 1.2V | " | $\overline{2Y1}$ | | " | | " | | " | " |
| | | 54 | | | | | | | 7.8mA | | | " | | | 4.2V | | | | | | " | " | $\overline{2Y2}$ | | " | | " | | " | " |
| | | 55 | | | | | 7.8mA | | | | | " | | | | | 4.2V | | | | " | " | $\overline{2Y3}$ | | " | | " | | " | " |
| | | 56 | | | 7.8mA | | | | | | | " | | | | | | | 4.2V | | " | " | 2Y4 | | " | | " | | " | " |
| $I_{OZH}$ | | 57 | 9/ | 9/ | | | | | | | | " | | | | | | | | 6V | | " | $\overline{1Y1}$ | | 0.2 | | 2.0 | | | μA |
| | | 58 | " | | | 9/ | | | | | | " | | | | | | 6V | | | | " | $\overline{1Y2}$ | | " | | " | | | " |
| | | 59 | " | | | | | 9/ | | | | " | | | | 6V | | | | | | " | $\overline{1Y3}$ | | " | | " | | | " |
| | | 60 | " | | | | | | | 9/ | | " | | 6V | | | | | | | | " | $\overline{1Y4}$ | | " | | " | | | " |
| | | 61 | | | | | | | | | 6V | " | 9/ | | | | | | | | 9/ | " | $\overline{2Y1}$ | | " | | " | | | " |
| | | 62 | | | | | | | 6V | | | " | | | 9/ | | | | | | " | " | $\overline{2Y2}$ | | " | | " | | | " |
| | | 63 | | | | | 6V | | | | | " | | | | | 9/ | | | | " | " | $\overline{2Y3}$ | | " | | " | | | " |
| | | 64 | | | 6V | | | | | | | " | | | | | | | 9/ | | " | " | $\overline{2Y4}$ | | " | | " | | | " |
| $I_{OZL}$ | | 65 | 9/ | 9/ | | | | | | | | " | | | | | | | | GND | | " | $\overline{1Y1}$ | | -0.2 | | -2.0 | | | " |
| | | 66 | " | | | 9/ | | | | | | " | | | | | | GND | | | | " | $\overline{1Y2}$ | | " | | " | | | " |
| | | 67 | " | | | | | 9/ | | | | " | | | | GND | | | | | | " | $\overline{1Y3}$ | | " | | " | | | " |
| | | 68 | " | | | | | | | 9/ | | " | | GND | | | | | | | | " | $\overline{1Y4}$ | | " | | " | | | " |
| | | 69 | | | | | | | | | GND | " | 9/ | | | | | | | | 9/ | " | $\overline{2Y1}$ | | " | | " | | | " |
| | | 70 | | | | | | | GND | | | " | | | 9/ | | | | | | " | " | $\overline{2Y2}$ | | " | | " | | | " |
| | | 71 | | | | | GND | | | | | " | | | | | 9/ | | | | " | " | $\overline{2Y3}$ | | " | | " | | | " |
| | | 72 | | | GND | | | | | | | " | | | | | | | 9/ | | " | " | $\overline{2Y4}$ | | " | | " | | | " |
| $I_{IH}$ | 3010 | 73 | 6V | GND | | GND | | GND | | GND | | " | GND | | GND | | GND | | GND | | GND | " | $\overline{1G}$ | | .05 | | 0.1 | | | " |
| | | 74 | GND | 6V | | GND | | " | | " | | " | " | | " | | " | | " | | " | " | 1A1 | | " | | " | | | " |
| | | 75 | " | GND | | 6V | | " | | " | | " | " | | " | | " | | " | | " | " | 1A2 | | " | | " | | | " |
| | | 76 | " | " | | GND | | 6V | | " | | " | " | | " | | " | | " | | " | " | 1A3 | | " | | " | | | " |
| | | 77 | " | " | | " | | GND | | 6V | | " | " | | " | | " | | " | | " | " | 1A4 | | " | | " | | | " |
| | | 78 | " | " | | " | | " | | GND | | " | 6V | | " | | " | | " | | " | " | 2A1 | | " | | " | | | " |
| | | 79 | " | " | | " | | " | | " | | " | GND | | 6V | | " | | " | | " | " | 2A2 | | " | | " | | | " |
| | | 80 | " | " | | " | | " | | " | | " | " | | GND | | 6V | | " | | " | " | 2A3 | | " | | " | | | " |
| | | 81 | " | " | | " | | " | | " | | " | " | | " | | GND | | 6V | | " | " | 2A4 | | " | | " | | | " |
| | | 82 | " | " | | " | | " | | " | | " | " | | " | | GND | | GND | | 6V | " | 2G | | " | | " | | | " |
| $I_{IL}$ | 3009 | 83 | " | 6V | | 6V | | 6V | | 6V | | " | 6V | | 6V | | 6V | | 6V | | 6V | " | $\overline{1G}$ | | -.05 | | -0.1 | | | " |
| | | 84 | 6V | GND | | 6V | | " | | " | | " | " | | " | | " | | " | | " | " | 1A1 | | " | | " | | | " |
| | | 85 | " | 6V | | GND | | " | | " | | " | " | | " | | " | | " | | " | " | 1A2 | | " | | " | | | " |
| | | 86 | " | " | | 6V | | GND | | " | | " | " | | " | | " | | " | | " | " | 1A3 | | " | | " | | | " |
| | | 87 | " | " | | " | | 6V | | GND | | " | " | | " | | " | | " | | " | " | 1A4 | | " | | " | | | " |
| | | 88 | " | " | | " | | " | | 6V | | " | GND | | " | | " | | " | | " | " | 2A1 | | " | | " | | | " |
| | | 89 | " | " | | " | | " | | " | | " | 6V | | GND | | " | | " | | " | " | 2A2 | | " | | " | | | " |
| | | 90 | " | " | | " | | " | | " | | " | " | | 6V | | GND | | " | | " | " | 2A3 | | " | | " | | | " |
| | | 91 | " | " | | " | | " | | " | | " | " | | " | | 6V | | GND | | " | " | 2A4 | | " | | " | | | " |
| | | 92 | " | " | | " | | " | | " | | " | " | | " | | 6V | | 6V | | GND | " | 2G | | " | | " | | | " |
| $I_{OS4}$ | 3011 | 93 | GND | GND | | GND | | GND | | GND | | " | GND | | GND | | GND | | GND | GND | | 4V | $\overline{1Y1}$ | -10 | -135 | -10 | -135 | -10 | -135 | mA |
| | | 94 | " | " | | " | | " | | " | | " | " | | " | | " | GND | " | | | " | $\overline{1Y2}$ | " | " | " | " | " | " | " |
| | | 95 | " | " | | " | | " | | " | | " | " | | " | GND | " | | " | | | " | $\overline{1Y3}$ | " | " | " | " | " | " | " |
| | | 96 | " | " | | " | | " | | " | | " | " | GND | " | | " | | " | | | " | $\overline{1Y4}$ | " | " | " | " | " | " | " |
| | | 97 | | " | | " | | " | | " | GND | " | " | | " | | " | | " | | GND | " | $\overline{2Y1}$ | " | " | " | " | " | " | " |
| | | 98 | | " | | " | | " | GND | " | | " | " | | " | | " | | " | | " | " | $\overline{2Y2}$ | " | " | " | " | " | " | " |
| | | 99 | | " | | " | GND | " | | " | | " | " | | " | | " | | " | | " | " | $\overline{2Y3}$ | " | " | " | " | " | " | " |
| | | 100 | | " | GND | " | | " | | " | | " | " | | " | | " | | " | | " | " | 2Y4 | " | " | " | " | " | " | " |

See footnotes at end of table.

TABLE III. Group A inspection for device type 03 – Continued.

| Symbol | MIL-STD-883 method | Cases R, S, and 2 | Terminal conditions 1/ | | | | | | | | | | | | | | | | | | | | Measured terminal | Test limits | | | | | | Unit |
|---|---|---|---|---|---|---|---|---|---|---|---|---|---|---|---|---|---|---|---|---|---|---|---|---|---|---|---|---|---|---|
| | | | 1 | 2 | 3 | 4 | 5 | 6 | 7 | 8 | 9 | 10 | 11 | 12 | 13 | 14 | 15 | 16 | 17 | 18 | 19 | 20 | | Subgroup 4 $T_C$ = +25°C | | | | | | |
| | | Test no. | $\overline{1G}$ | 1A1 | $\overline{2Y4}$ | 1A2 | $\overline{2Y3}$ | 1A3 | $\overline{2Y2}$ | 1A4 | $\overline{2Y1}$ | GND | 2A1 | $\overline{1Y4}$ | 2A2 | $\overline{1Y3}$ | 2A3 | $\overline{1Y2}$ | 2A4 | $\overline{1Y1}$ | $\overline{2G}$ | $V_{CC}$ | | Min | Max | | | | | |
| $C_i$ | 3012 | 101 | 2/ | | | | | | | | | GND | | | | | | | | | | GND | $\overline{1G}$ | | 10 | | | | | pF |
| | | 102 | | 2/ | | | | | | | | " | | | | | | | | | | " | 1A1 | | " | | | | | " |
| | | 103 | | | | 2/ | | | | | | " | | | | | | | | | | " | 1A2 | | " | | | | | " |
| | | 104 | | | | | | 2/ | | | | " | | | | | | | | | | " | 1A3 | | " | | | | | " |
| | | 105 | | | | | | | | 2/ | | " | | | | | | | | | | " | 1A4 | | " | | | | | " |
| | | 106 | | | | | | | | | | " | 2/ | | | | | | | | | " | 2A1 | | " | | | | | " |
| | | 107 | | | | | | | | | | " | | | 2/ | | | | | | | " | 2A2 | | " | | | | | " |
| | | 108 | | | | | | | | | | " | | | | | 2/ | | | | | " | 2A3 | | " | | | | | " |
| | | 109 | | | | | | | | | | " | | | | | | | 2/ | | | " | 2A4 | | " | | | | | " |
| | | 110 | | | | | | | | | | " | | | | | | | | | 2/ | " | $\overline{2G}$ | | " | | | | | " |
| $C_O$ | | 111 | | | 2/ | | 2/ | | 2/ | | 2/ | " | | | | | | | | | 6V | 6V | $\overline{2Y}$'s | | 20 | | | | | " |
| | | 112 | 6V | | | | | | | | | " | | 2/ | | 2/ | | 2/ | | 2/ | | 6V | $\overline{1Y}$'s | | 20 | | | | | " |
| | | | | | | | | | | | | | | | | | | | | | | | | Subgroup 7 $T_C$ = +25°C | | Subgroup 8 $T_C$ = +125°C | | Subgroup 8 $T_C$ = -55°C | | |
| | | | | | | | | | | | | | | | | | | | | | | | | Min | Max | Min | Max | Min | Max | |
| Truth table | 3014 6/ | 113 | B | B | H | B | H | B | H | B | H | GND | B | H | B | H | B | H | B | H | B | 4.5V | 7/ | | | | | | | |
| | | 114 | B | A | L | A | L | A | L | A | L | GND | A | L | A | L | A | L | A | L | B | 4.5V | 7/ | | | | | | | |
| | | | | | | | | | | | | | | | | | | | | | | | | Subgroup 9 $T_C$ = +25°C | | Subgroup 10 $T_C$ = +125°C | | Subgroup 11 $T_C$ = -55°C | | |
| | | | | | | | | | | | | | | | | | | | | | | | | Min | Max | Min | Max | Min | Max | |
| $t_{PHL}$ | 3003 (Fig. 3) | 115 | GND | IN | | | | | | | | GND | | | | | | | | OUT | | 4.5V | 1A1 to $\overline{1Y1}$ | 5 | 18 | 5 | 23 | 5 | 18 | ns |
| | | 116 | " | | | IN | | | | | | " | | | | | | OUT | | | | " | 1A2 to $\overline{1Y2}$ | " | " | " | " | " | " | " |
| | | 117 | " | | | | | IN | | | | " | | | | OUT | | | | | | " | 1A3 to $\overline{1Y3}$ | " | " | " | " | " | " | " |
| | | 118 | " | | | | | | | IN | | " | | OUT | | | | | | | | " | 1A4 to $\overline{1Y4}$ | " | " | " | " | " | " | " |
| | | 119 | | | | | | | | | OUT | " | IN | | | | | | | | GND | " | 2A1 to $\overline{2Y1}$ | " | " | " | " | " | " | " |
| | | 120 | | | | | | | OUT | | | " | | | IN | | | | | | " | " | 2A2 to $\overline{2Y2}$ | " | " | " | " | " | " | " |
| | | 121 | | | | | OUT | | | | | " | | | | | IN | | | | " | " | 2A3 to $\overline{2Y3}$ | " | " | " | " | " | " | " |
| | | 122 | | | OUT | | | | | | | " | | | | | | | IN | | " | " | 2A4 to $\overline{2Y4}$ | " | " | " | " | " | " | " |
| $t_{PLH}$ | 3003 (Fig. 3) | 123 | GND | IN | | | | | | | | " | | | | | | | | OUT | | " | 1A1 to $\overline{1Y1}$ | " | " | " | " | " | " | " |
| | | 124 | " | | | IN | | | | | | " | | | | | | OUT | | | | " | 1A2 to $\overline{1Y2}$ | " | " | " | " | " | " | " |
| | | 125 | " | | | | | IN | | | | " | | | | OUT | | | | | | " | 1A3 to $\overline{1Y3}$ | " | " | " | " | " | " | " |
| | | 126 | " | | | | | | | IN | | " | | OUT | | | | | | | | " | 1A4 to $\overline{1Y4}$ | " | " | " | " | " | " | " |
| | | 127 | | | | | | | | | OUT | " | IN | | | | | | | | GND | " | 2A1 to $\overline{2Y1}$ | " | " | " | " | " | " | " |
| | | 128 | | | | | | | OUT | | | " | | | IN | | | | | | " | " | 2A2 to $\overline{2Y2}$ | " | " | " | " | " | " | " |
| | | 129 | | | | | OUT | | | | | " | | | | | IN | | | | " | " | 2A3 to $\overline{2Y3}$ | " | " | " | " | " | " | " |
| | | 130 | | | OUT | | | | | | | " | | | | | | | IN | | " | " | 2A4 to $\overline{2Y4}$ | " | " | " | " | " | " | " |
| $t_{PZL}$ | 3003 (Fig. 3) | 131 | IN | 4.5V | | | | | | | | " | | | | | | | | OUT | | " | $\overline{1G}$ to $\overline{1Y1}$ | " | 25 | " | 35 | " | 25 | " |
| | | 132 | " | | | 4.5V | | | | | | " | | | | | | OUT | | | | " | $\overline{1G}$ to $\overline{1Y2}$ | " | " | " | " | " | " | " |
| | | 133 | " | | | | | 4.5V | | | | " | | | | OUT | | | | | | " | $\overline{1G}$ to $\overline{1Y3}$ | " | " | " | " | " | " | " |
| | | 134 | " | | | | | | | 4.5V | | " | | OUT | | | | | | | | " | $\overline{1G}$ to $\overline{1Y4}$ | " | " | " | " | " | " | " |
| | | 135 | | | | | | | | | OUT | " | 4.5V | | | | | | | | IN | " | $\overline{2G}$ to $\overline{2Y1}$ | " | " | " | " | " | " | " |
| | | 136 | | | | | | | OUT | | | " | | | 4.5V | | | | | | " | " | $\overline{2G}$ to $\overline{2Y2}$ | " | " | " | " | " | " | " |
| | | 137 | | | | | OUT | | | | | " | | | | | 4.5V | | | | " | " | $\overline{2G}$ to $\overline{2Y3}$ | " | " | " | " | " | " | " |
| | | 138 | | | OUT | | | | | | | " | | | | | | | 4.5V | | " | " | $\overline{2G}$ to $\overline{2Y4}$ | " | " | " | " | " | " | " |

See footnotes at end of table.

TABLE III. Group A inspection for device type 03 – Continued.

| Symbol | MIL-STD-883 method | Cases R, S, and 2 | Terminal conditions 1/ | | | | | | | | | | | | | | | | | | | | Measured terminal | Test limits | | | | | | Unit |
|---|---|---|---|---|---|---|---|---|---|---|---|---|---|---|---|---|---|---|---|---|---|---|---|---|---|---|---|---|---|---|
| | | | 1 | 2 | 3 | 4 | 5 | 6 | 7 | 8 | 9 | 10 | 11 | 12 | 13 | 14 | 15 | 16 | 17 | 18 | 19 | 20 | | Subgroup 9 $T_C$ = +25°C | | Subgroup 10 $T_C$ = +125°C | | Subgroup 11 $T_C$ = -55°C | | |
| | | Test no. | $\overline{1G}$ | 1A1 | $\overline{2Y4}$ | 1A2 | $\overline{2Y3}$ | 1A3 | $\overline{2Y2}$ | 1A4 | $\overline{2Y1}$ | GND | 2A1 | $\overline{1Y4}$ | 2A2 | $\overline{1Y3}$ | 2A3 | $\overline{1Y2}$ | 2A4 | $\overline{1Y1}$ | $\overline{2G}$ | $V_{CC}$ | | Min | Max | Min | Max | Min | Max | |
| $t_{PZH}$ | 3003 (Fig. 3) | 139 | IN | GND | | | | | | | | GND | | | | | | | | OUT | | 4.5V | $\overline{1G}$ to $\overline{1Y1}$ | 5 | 25 | 5 | 35 | 5 | 25 | ns |
| | | 140 | " | | | GND | | | | | | " | | | | | | OUT | | | | " | $\overline{1G}$ to $\overline{1Y2}$ | " | " | " | " | " | " | " |
| | | 141 | " | | | | | GND | | | | " | | | | OUT | | | | | | " | $\overline{1G}$ to $\overline{1Y3}$ | " | " | " | " | " | " | " |
| | | 142 | " | | | | | | | GND | | " | | OUT | | | | | | | | " | $\overline{1G}$ to $\overline{1Y4}$ | " | " | " | " | " | " | " |
| | | 143 | | | | | | | | | OUT | " | GND | | | | | | | | IN | " | $\overline{2G}$ to $\overline{2Y1}$ | " | " | " | " | " | " | " |
| | | 144 | | | | | | | OUT | | | " | | | GND | | | | | | " | " | $\overline{2G}$ to $\overline{2Y2}$ | " | " | " | " | " | " | " |
| | | 145 | | | | | OUT | | | | | " | | | | | GND | | | | " | " | $\overline{2G}$ to $\overline{2Y3}$ | " | " | " | " | " | " | " |
| | | 146 | | | OUT | | | | | | | " | | | | | | | GND | | " | " | $\overline{2G}$ to $\overline{2Y4}$ | " | " | " | " | " | " | " |
| $t_{PLZ}$ | 3003 (Fig. 3) | 147 | IN | 4.5V | | | | | | | | " | | | | | | | | OUT | | " | $\overline{1G}$ to $\overline{1Y1}$ | " | " | " | " | " | " | " |
| | | 148 | " | | | 4.5V | | | | | | " | | | | | | OUT | | | | " | $\overline{1G}$ to $\overline{1Y2}$ | " | " | " | " | " | " | " |
| | | 149 | " | | | | | 4.5V | | | | " | | | | OUT | | | | | | " | $\overline{1G}$ to $\overline{1Y3}$ | " | " | " | " | " | " | " |
| | | 150 | " | | | | | | | 4.5V | | " | | OUT | | | | | | | | " | $\overline{1G}$ to $\overline{1Y4}$ | " | " | " | " | " | " | " |
| | | 151 | | | | | | | | | OUT | " | 4.5V | | | | | | | | IN | " | $\overline{2G}$ to $\overline{2Y1}$ | " | " | " | " | " | " | " |
| | | 152 | | | | | | | OUT | | | " | | | 4.5V | | | | | | " | " | $\overline{2G}$ to $\overline{2Y2}$ | " | " | " | " | " | " | " |
| | | 153 | | | | | OUT | | | | | " | | | | | 4.5V | | | | " | " | $\overline{2G}$ to $\overline{2Y3}$ | " | " | " | " | " | " | " |
| | | 154 | | | OUT | | | | | | | " | | | | | | | 4.5V | | " | " | $\overline{2G}$ to $\overline{2Y4}$ | " | " | " | " | " | " | " |
| $t_{PHZ}$ | 3003 (Fig. 3) | 155 | IN | GND | | | | | | | | GND | | | | | | | | OUT | | 4.5V | $\overline{1G}$ to $\overline{1Y1}$ | 5 | 25 | 5 | 35 | 5 | 25 | ns |
| | | 156 | " | | | GND | | | | | | " | | | | | | OUT | | | | " | $\overline{1G}$ to $\overline{1Y2}$ | " | " | " | " | " | " | " |
| | | 157 | " | | | | | GND | | | | " | | | | OUT | | | | | | " | $\overline{1G}$ to $\overline{1Y3}$ | " | " | " | " | " | " | " |
| | | 158 | " | | | | | | | GND | | " | | OUT | | | | | | | | " | $\overline{1G}$ to $\overline{1Y4}$ | " | " | " | " | " | " | " |
| | | 159 | | | | | | | | | OUT | " | GND | | | | | | | | IN | " | $\overline{2G}$ to $\overline{2Y1}$ | " | " | " | " | " | " | " |
| | | 160 | | | | | | | OUT | | | " | | | GND | | | | | | " | " | $\overline{2G}$ to $\overline{2Y2}$ | " | " | " | " | " | " | " |
| | | 161 | | | | | OUT | | | | | " | | | | | GND | | | | " | " | $\overline{2G}$ to $\overline{2Y3}$ | " | " | " | " | " | " | " |
| | | 162 | | | OUT | | | | | | | " | | | | | | | GND | | " | " | $\overline{2G}$ to $\overline{2Y4}$ | " | " | " | " | " | " | " |
| $t_{THL}$ | 3004 (Fig. 3) | 163 | GND | IN | | | | | | | | " | | | | | | | | OUT | | " | $\overline{1Y1}$ | 2 | 12 | 2 | 16 | 2 | 12 | ns |
| | | 164 | " | | | IN | | | | | | " | | | | | | OUT | | | | " | $\overline{1Y2}$ | " | " | " | " | " | " | " |
| | | 165 | " | | | | | IN | | | | " | | | | OUT | | | | | | " | $\overline{1Y3}$ | " | " | " | " | " | " | " |
| | | 166 | " | | | | | | | IN | | " | | OUT | | | | | | | | " | $\overline{1Y4}$ | " | " | " | " | " | " | " |
| | | 167 | | | | | | | | | OUT | " | IN | | | | | | | | GND | " | $\overline{2Y1}$ | " | " | " | " | " | " | " |
| | | 168 | | | | | | | OUT | | | " | | | IN | | | | | | " | " | $\overline{2Y2}$ | " | " | " | " | " | " | " |
| | | 169 | | | | | OUT | | | | | " | | | | | IN | | | | " | " | $\overline{2Y3}$ | " | " | " | " | " | " | " |
| | | 170 | | | OUT | | | | | | | " | | | | | | | IN | | " | " | $\overline{2Y4}$ | " | " | " | " | " | " | " |
| $t_{TLH}$ | 3004 (Fig. 3) | 171 | GND | IN | | | | | | | | " | | | | | | | | OUT | | " | $\overline{1Y1}$ | " | " | " | " | " | " | " |
| | | 172 | " | | | IN | | | | | | " | | | | | | OUT | | | | " | $\overline{1Y2}$ | " | " | " | " | " | " | " |
| | | 173 | " | | | | | IN | | | | " | | | | OUT | | | | | | " | $\overline{1Y3}$ | " | " | " | " | " | " | " |
| | | 174 | " | | | | | | | IN | | " | | OUT | | | | | | | | " | $\overline{1Y4}$ | " | " | " | " | " | " | " |
| | | 175 | | | | | | | | | OUT | " | IN | | | | | | | | GND | " | $\overline{2Y1}$ | " | " | " | " | " | " | " |
| | | 176 | | | | | | | OUT | | | " | | | IN | | | | | | " | " | $\overline{2Y2}$ | " | " | " | " | " | " | " |
| | | 177 | | | | | OUT | | | | | " | | | | | IN | | | | " | " | $\overline{2Y3}$ | " | " | " | " | " | " | " |
| | | 178 | | | OUT | | | | | | | " | | | | | | | IN | | " | " | $\overline{2Y4}$ | " | " | " | " | " | " | " |

See footnotes at end of table.

TABLE III. Group A inspection for device type 04.

| Symbol | MIL-STD-883 method | Cases R, S, and 2 | Terminal conditions 1/ | | | | | | | | | | | | | | | | | | | | Measured terminal | Test limits | | | | | | Unit |
|---|---|---|---|---|---|---|---|---|---|---|---|---|---|---|---|---|---|---|---|---|---|---|---|---|---|---|---|---|---|---|
| | | | 1 | 2 | 3 | 4 | 5 | 6 | 7 | 8 | 9 | 10 | 11 | 12 | 13 | 14 | 15 | 16 | 17 | 18 | 19 | 20 | | Subgroup 1 $T_C$ = +25°C | | Subgroup 2 $T_C$ = +125°C | | Subgroup 3 $T_C$ = -55°C | | |
| | | Test no. | $\overline{1G}$ | 1A1 | 2Y4 | 1A2 | 2Y3 | 1A3 | 2Y2 | 1A4 | 2Y1 | GND | 2A1 | 1Y4 | 2A2 | 1Y3 | 2A3 | 1Y2 | 2A4 | 1Y1 | 2G | $V_{CC}$ | | Min | Max | Min | Max | Min | Max | |
| $V_{IC}$ (pos) | | 1 | 1mA | | | | | | | | | OPEN | | | | | | | | | | GND | $\overline{1G}$ | 1/ | 1.5 | | | | | V |
| | | 2 | | 1mA | | | | | | | | " | | | | | | | | | | " | 1A1 | " | " | | | | | " |
| | | 3 | | | | 1mA | | | | | | " | | | | | | | | | | " | 1A2 | " | " | | | | | " |
| | | 4 | | | | | | 1mA | | | | " | | | | | | | | | | " | 1A3 | " | " | | | | | " |
| | | 5 | | | | | | | | 1mA | | " | | | | | | | | | | " | 1A4 | " | " | | | | | " |
| | | 6 | | | | | | | | | | " | 1mA | | | | | | | | | " | 2A1 | " | " | | | | | " |
| | | 7 | | | | | | | | | | " | | | 1mA | | | | | | | " | 2A2 | " | " | | | | | " |
| | | 8 | | | | | | | | | | " | | | | | 1mA | | | | | " | 2A3 | " | " | | | | | " |
| | | 9 | | | | | | | | | | " | | | | | | | 1mA | | | " | 2A4 | " | " | | | | | " |
| | | 10 | | | | | | | | | | | | | | | | | | | 1mA | " | 2G | " | " | | | | | " |
| $V_{IC}$ (neg) | | 11 | -1mA | | | | | | | | | GND | | | | | | | | | | OPEN | $\overline{1G}$ | | -1.5 | | | | | " |
| | | 12 | | -1mA | | | | | | | | " | | | | | | | | | | " | 1A1 | | " | | | | | " |
| | | 13 | | | | -1mA | | | | | | " | | | | | | | | | | " | 1A2 | | " | | | | | " |
| | | 14 | | | | | | -1mA | | | | " | | | | | | | | | | " | 1A3 | | " | | | | | " |
| | | 15 | | | | | | | | -1mA | | " | | | | | | | | | | " | 1A4 | | " | | | | | " |
| | | 16 | | | | | | | | | | " | -1mA | | | | | | | | | " | 2A1 | | " | | | | | " |
| | | 17 | | | | | | | | | | " | | | -1mA | | | | | | | " | 2A2 | | " | | | | | " |
| | | 18 | | | | | | | | | | " | | | | | -1mA | | | | | " | 2A3 | | " | | | | | " |
| | | 19 | | | | | | | | | | " | | | | | | | -1mA | | | " | 2A4 | | " | | | | | " |
| | | 20 | | | | | | | | | | | | | | | | | | | -1mA | " | 2G | | " | | | | | " |
| $I_{CCH}$ | 3005 | 21 | GND | 6V | | 6V | | 6V | | 6V | | " | 6V | | 6V | | 6V | | 6V | | 6V | 6V | $V_{CC}$ | | 0.2 | | 20 | | | μA |
| $I_{CCL}$ | 3005 | 22 | GND | GND | | GND | | GND | | GND | | " | GND | | GND | | GND | | GND | | " | " | " | | 0.2 | | 20 | | | " |
| $I_{CCZ}$ | | 23 | 6V | 6V | | 6V | | 6V | | 6V | | " | GND | | GND | | GND | | GND | | " | " | " | | 0.1 | | 10 | | | " |
| | | 24 | GND | GND | | GND | | GND | | GND | | " | 6V | | 6V | | 6V | | 6V | | GND | " | " | | 0.1 | | 10 | | | " |
| $V_{OH3}$ | 3006 | 25 | 1.2V | 4.2V | | | | | | | | " | | | | | | | | -20μA | | " | 1Y1 | 5.95 | | 5.95 | | 5.95 | | V |
| | | 26 | " | | | 4.2V | | | | | | " | | | | | | -20μA | | | | " | 1Y2 | " | | " | | " | | " |
| | | 27 | " | | | | | 4.2V | | | | " | | | | -20μA | | | | | | " | 1Y3 | " | | " | | " | | " |
| | | 28 | " | | | | | | | 4.2V | | " | | -20μA | | | | | | | | " | 1Y4 | " | | " | | " | | " |
| | | 29 | | | | | | | | | -20μA | " | 4.2V | | | | | | | | 4.2V | " | 2Y1 | " | | " | | " | | " |
| | | 30 | | | | | | | -20μA | | | " | | | 4.2V | | | | | | " | " | 2Y2 | " | | " | | " | | " |
| | | 31 | | | | | -20μA | | | | | " | | | | | 4.2V | | | | | " | 2Y3 | " | | " | | " | | " |
| | | 32 | | | -20μA | | | | | | | " | | | | | | | 4.2V | | " | " | 2Y4 | " | | " | | " | | " |
| $V_{OH5}$ | 3006 | 33 | 1.2V | 4.2V | | | | | | | | " | | | | | | | | -7.8mA | | " | 1Y1 | 5.48 | | 5.2 | | 5.48 | | " |
| | | 34 | " | | | 4.2V | | | | | | " | | | | | | -7.8mA | | | | " | 1Y2 | " | | " | | " | | " |
| | | 35 | " | | | | | 4.2V | | | | " | | | | -7.8mA | | | | | | " | 1Y3 | " | | " | | " | | " |
| | | 36 | " | | | | | | | 4.2V | | " | | -7.8mA | | | | | | | | " | 1Y4 | " | | " | | " | | " |
| | | 37 | | | | | | | | | -7.8mA | " | 4.2V | | | | | | | | 4.2V | " | 2Y1 | " | | " | | " | | " |
| | | 38 | | | | | | | -7.8mA | | | " | | | 4.2V | | | | | | " | " | 2Y2 | " | | " | | " | | " |
| | | 39 | | | | | -7.8mA | | | | | " | | | | | 4.2V | | | | " | " | 2Y3 | " | | " | | " | | " |
| | | 40 | | | -7.8mA | | | | | | | " | | | | | | | 4.2V | | " | " | 2Y4 | " | | " | | " | | " |
| $V_{OL3}$ | 3007 | 41 | 1.2V | 1.2V | | | | | | | | " | | | | | | | | 20μA | | " | 1Y1 | | 0.05 | | 0.05 | | 0.05 | " |
| | | 42 | " | | | 1.2V | | | | | | " | | | | | | 20μA | | | | " | 1Y2 | | " | | " | | " | " |
| | | 43 | " | | | | | 1.2V | | | | " | | | | 20μA | | | | | | " | 1Y3 | | " | | " | | " | " |
| | | 44 | " | | | | | | | 1.2V | | " | | 20μA | | | | | | | | " | 1Y4 | | " | | " | | " | " |
| | | 45 | | | | | | | | | 20μA | " | 1.2V | | | | | | | | 4.2V | " | 2Y1 | | " | | " | | " | " |
| | | 46 | | | | | | | 20μA | | | " | | | 1.2V | | | | | | " | " | 2Y2 | | " | | " | | " | " |
| | | 47 | | | | | 20μA | | | | | " | | | | | 1.2V | | | | " | " | 2Y3 | | " | | " | | " | " |
| | | 48 | | | 20μA | | | | | | | " | | | | | | | 1.2V | | " | " | 2Y4 | | " | | " | | " | " |

See footnotes at end of table.

TABLE III. Group A inspection for device type 04 – Continued.

| Symbol | MIL-STD-883 method | Cases R, S, and 2 | Terminal conditions 1/ | | | | | | | | | | | | | | | | | | | | Measured terminal | Test limits | | | | | | Unit |
|---|---|---|---|---|---|---|---|---|---|---|---|---|---|---|---|---|---|---|---|---|---|---|---|---|---|---|---|---|---|---|
| | | | 1 | 2 | 3 | 4 | 5 | 6 | 7 | 8 | 9 | 10 | 11 | 12 | 13 | 14 | 15 | 16 | 17 | 18 | 19 | 20 | | Subgroup 1 $T_C$ = +25°C | | Subgroup 2 $T_C$ = +125°C | | Subgroup 3 $T_C$ = -55°C | | |
| | | Test no. | $\overline{1G}$ | 1A1 | 2Y4 | 1A2 | 2Y3 | 1A3 | 2Y2 | 1A4 | 2Y1 | GND | 2A1 | 1Y4 | 2A2 | 1Y3 | 2A3 | 1Y2 | 2A4 | 1Y1 | 2G | $V_{CC}$ | | Min | Max | Min | Max | Min | Max | |
| $V_{OL5}$ | 3007 | 49 | 1.2V | 1.2V | | | | | | | | GND | | | | | | | | 7.8mA | | 6V | 1Y1 | | 0.26 | | 0.4 | | 0.26 | V |
| | | 50 | " | | | 1.2V | | | | | | " | | | | | | 7.8mA | | | | " | 1Y2 | | " | | " | | " | " |
| | | 51 | " | | | | | 1.2V | | | | " | | | | 7.8mA | | | | | | " | 1Y3 | | " | | " | | " | " |
| | | 52 | " | | | | | | | 1.2V | | " | | 7.8mA | | | | | | | | " | 1Y4 | | " | | " | | " | " |
| | | 53 | | | | | | | | | 7.8mA | " | 1.2V | | | | | | | | 4.2V | " | 2Y1 | | " | | " | | " | " |
| | | 54 | | | | | | | 7.8mA | | | " | | | 1.2V | | | | | | " | " | 2Y2 | | " | | " | | " | " |
| | | 55 | | | | | 7.8mA | | | | | " | | | | | 1.2V | | | | " | " | 2Y3 | | " | | " | | " | " |
| | | 56 | | | 7.8mA | | | | | | | " | | | | | | | 1.2V | | " | " | 2Y4 | | " | | " | | " | " |
| $I_{OZH}$ | | 57 | 9/ | 9/ | | | | | | | | " | | | | | | | | 6V | | " | 1Y1 | | 0.2 | | 2.0 | | | µA |
| | | 58 | " | | | 9/ | | | | | | " | | | | | | 6V | | | | " | 1Y2 | | " | | " | | | " |
| | | 59 | " | | | | | 9/ | | | | " | | | | 6V | | | | | | " | 1Y3 | | " | | " | | | " |
| | | 60 | " | | | | | | | 9/ | | " | | 6V | | | | | | | | " | 1Y4 | | " | | " | | | " |
| | | 61 | | | | | | | | | 6V | " | 9/ | | | | | | | | 9/ | " | 2Y1 | | " | | " | | | " |
| | | 62 | | | | | | | 6V | | | " | | | 9/ | | | | | | " | " | 2Y2 | | " | | " | | | " |
| | | 63 | | | | | 6V | | | | | " | | | | | 9/ | | | | " | " | 2Y3 | | " | | " | | | " |
| | | 64 | | | 6V | | | | | | | " | | | | | | | 9/ | | " | " | 2Y4 | | " | | " | | | " |
| $I_{OZL}$ | | 65 | 9/ | 9/ | | | | | | | | GND | | | | | | | | GND | | 6V | 1Y1 | | -0.2 | | -2.0 | | | µA |
| | | 66 | " | | | 9/ | | | | | | " | | | | | | GND | | | | " | 1Y2 | | " | | " | | | " |
| | | 67 | " | | | | | 9/ | | | | " | | | | GND | | | | | | " | 1Y3 | | " | | " | | | " |
| | | 68 | " | | | | | | | 9/ | | " | | GND | | | | | | | | " | 1Y4 | | " | | " | | | " |
| | | 69 | | | | | | | | | GND | " | 9/ | | | | | | | | 9/ | " | 2Y1 | | " | | " | | | " |
| | | 70 | | | | | | | GND | | | " | | | 9/ | | | | | | " | " | 2Y2 | | " | | " | | | " |
| | | 71 | | | | | GND | | | | | " | | | | | 9/ | | | | " | " | 2Y3 | | " | | " | | | " |
| | | 72 | | | GND | | | | | | | " | | | | | | | 9/ | | " | " | 2Y4 | | " | | " | | | " |
| $I_{IH}$ | 3010 | 73 | 6V | GND | | GND | | GND | | GND | | " | GND | | GND | | GND | | GND | | GND | " | $\overline{1G}$ | | .05 | | 0.1 | | | " |
| | | 74 | GND | 6V | | GND | | " | | " | | " | " | | " | | " | | " | | " | " | 1A1 | | " | | " | | | " |
| | | 75 | " | GND | | 6V | | " | | " | | " | " | | " | | " | | " | | " | " | 1A2 | | " | | " | | | " |
| | | 76 | " | " | | GND | | 6V | | " | | " | " | | " | | " | | " | | " | " | 1A3 | | " | | " | | | " |
| | | 77 | " | " | | " | | GND | | 6V | | " | " | | " | | " | | " | | " | " | 1A4 | | " | | " | | | " |
| | | 78 | " | " | | " | | " | | GND | | " | 6V | | " | | " | | " | | " | " | 2A1 | | " | | " | | | " |
| | | 79 | " | " | | " | | " | | " | | " | GND | | 6V | | " | | " | | " | " | 2A2 | | " | | " | | | " |
| | | 80 | " | " | | " | | " | | " | | " | " | | GND | | 6V | | " | | " | " | 2A3 | | " | | " | | | " |
| | | 81 | " | " | | " | | " | | " | | " | " | | " | | GND | | 6V | | " | " | 2A4 | | " | | " | | | " |
| | | 82 | " | " | | " | | " | | " | | " | " | | " | | GND | | GND | | 6V | " | 2G | | " | | " | | | " |
| $I_{IL}$ | 3009 | 83 | " | 6V | | 6V | | 6V | | 6V | | " | 6V | | 6V | | 6V | | 6V | | 6V | " | $\overline{1G}$ | | -.05 | | -0.1 | | | " |
| | | 84 | 6V | GND | | 6V | | " | | " | | " | " | | " | | " | | " | | " | " | 1A1 | | " | | " | | | " |
| | | 85 | " | 6V | | GND | | " | | " | | " | " | | " | | " | | " | | " | " | 1A2 | | " | | " | | | " |
| | | 86 | " | " | | 6V | | GND | | " | | " | " | | " | | " | | " | | " | " | 1A3 | | " | | " | | | " |
| | | 87 | " | " | | " | | 6V | | GND | | " | " | | " | | " | | " | | " | " | 1A4 | | " | | " | | | " |
| | | 88 | " | " | | " | | " | | 6V | | " | GND | | " | | " | | " | | " | " | 2A1 | | " | | " | | | " |
| | | 89 | " | " | | " | | " | | " | | " | 6V | | GND | | " | | " | | " | " | 2A2 | | " | | " | | | " |
| | | 90 | " | " | | " | | " | | " | | " | " | | 6V | | GND | | " | | " | " | 2A3 | | " | | " | | | " |
| | | 91 | " | " | | " | | " | | " | | " | " | | " | | 6V | | GND | | " | " | 2A4 | | " | | " | | | " |
| | | 92 | " | " | | " | | " | | " | | " | " | | " | | 6V | | 6V | | GND | " | 2G | | " | | " | | | " |

See footnotes at end of table.

TABLE III. Group A inspection for device type 04 – Continued.

| Symbol | MIL-STD-883 method | Cases R, S, and 2 | Terminal conditions 1/ | | | | | | | | | | | | | | | | | | | | Measured terminal | Test limits | | | | | | Unit |
|---|---|---|---|---|---|---|---|---|---|---|---|---|---|---|---|---|---|---|---|---|---|---|---|---|---|---|---|---|---|---|
| | | | 1 | 2 | 3 | 4 | 5 | 6 | 7 | 8 | 9 | 10 | 11 | 12 | 13 | 14 | 15 | 16 | 17 | 18 | 19 | 20 | | Subgroup 1 $T_C$ = +25°C | | Subgroup 2 $T_C$ =+125°C | | Subgroup 3 $T_C$ = -55°C | | |
| | | Test no. | $\overline{1G}$ | 1A1 | 2Y4 | 1A2 | 2Y3 | 1A3 | 2Y2 | 1A4 | 2Y1 | GND | 2A1 | 1Y4 | 2A2 | 1Y3 | 2A3 | 1Y2 | 2A4 | 1Y1 | 2G | $V_{CC}$ | | Min | Max | Min | Max | Min | Max | |
| $I_{OS4}$ | 3011 | 93 | GND | 4V | | 4V | | 4V | | 4V | | GND | 4V | | 4V | | 4V | | 4V | GND | | 4V | 1Y1 | -10 | -135 | -10 | -135 | -10 | -135 | mA |
| | | 94 | " | " | | " | | " | | " | | " | " | | " | | " | GND | " | | | " | 1Y2 | " | " | " | " | " | " | " |
| | | 95 | " | " | | " | | " | | " | | " | " | | " | GND | " | | " | | | " | 1Y3 | " | " | " | " | " | " | " |
| | | 96 | " | " | | " | | " | | " | | " | " | GND | " | | " | | " | | | " | 1Y4 | " | " | " | " | " | " | " |
| | | 97 | | " | | " | | " | | " | GND | " | " | | " | | " | | " | | 4V | " | 2Y1 | " | " | " | " | " | " | " |
| | | 98 | | " | | " | | " | GND | " | | " | " | | " | | " | | " | | " | " | 2Y2 | " | " | " | " | " | " | " |
| | | 99 | | " | | " | GND | " | | " | | " | " | | " | | " | | " | | " | " | 2Y3 | " | " | " | " | " | " | " |
| | | 100 | | " | GND | " | | " | | " | | " | " | | " | | " | | " | | " | " | 2Y4 | " | " | " | " | " | " | " |
| | | | | | | | | | | | | | | | | | | | | | | | | Subgroup 4 $T_C$ = +25°C | | | | | | |
| | | | | | | | | | | | | | | | | | | | | | | | | Min | Max | | | | | |
| $C_i$ | 3012 | 101 | 2/ | | | | | | | | | GND | | | | | | | | | | GND | $\overline{1G}$ | | 10 | | | | | pF |
| | | 102 | | 2/ | | | | | | | | " | | | | | | | | | | " | 1A1 | | " | | | | | " |
| | | 103 | | | | 2/ | | | | | | " | | | | | | | | | | " | 1A2 | | " | | | | | " |
| | | 104 | | | | | | 2/ | | | | " | | | | | | | | | | " | 1A3 | | " | | | | | " |
| | | 105 | | | | | | | | 2/ | | " | | | | | | | | | | " | 1A4 | | " | | | | | " |
| | | 106 | | | | | | | | | | " | 2/ | | | | | | | | | " | 2A1 | | " | | | | | " |
| | | 107 | | | | | | | | | | " | | | 2/ | | | | | | | " | 2A2 | | " | | | | | " |
| | | 108 | | | | | | | | | | " | | | | | 2/ | | | | | " | 2A3 | | " | | | | | " |
| | | 109 | | | | | | | | | | " | | | | | | | 2/ | | | " | 2A4 | | " | | | | | " |
| | | 110 | | | | | | | | | | " | | | | | | | | | 2/ | " | 2G | | " | | | | | " |
| $C_O$ | 3012 | 111 | 6V | | | | | | | | | " | | | | | | | | | 6V | 6V | 1Y's | | 20 | | | | | " |
| | | 112 | GND | | 2/ | | 2/ | | 2/ | | 2/ | " | | 2/ | | 2/ | | 2/ | | 2/ | GND | 6V | 2Y's | | 20 | | | | | " |
| | | | | | | | | | | | | | | | | | | | | | | | | Subgroup 7 $T_C$ = +25°C | | Subgroup 8 $T_C$ = +125°C | | Subgroup 8 $T_C$ = -55°C | | |
| | | | | | | | | | | | | | | | | | | | | | | | | Min | Max | Min | Max | Min | Max | |
| Truth table | 3014 6/ | 113 | B | B | L | B | L | B | L | B | L | " | B | L | B | L | B | L | B | L | A | 4.5V | 7/ | | | | | | | |
| | | 114 | B | A | H | A | H | A | H | A | H | " | A | H | A | H | A | H | A | H | A | 4.5V | 7/ | | | | | | | |
| | | | | | | | | | | | | | | | | | | | | | | | | Subgroup 9 $T_C$ = +25°C | | Subgroup 10 $T_C$ = +125°C | | Subgroup 11 $T_C$ = -55°C | | |
| | | | | | | | | | | | | | | | | | | | | | | | | Min | Max | Min | Max | Min | Max | |
| $t_{PHL}$ | 3003 (Fig. 3) | 115 | GND | IN | | | | | | | | GND | | | | | | | | OUT | | 4.5V | 1A1 to 1Y1 | 5 | 20 | 5 | 27 | 5 | 20 | ns |
| | | 116 | " | | | IN | | | | | | " | | | | | | OUT | | | | " | 1A2 to 1Y2 | " | " | " | " | " | " | " |
| | | 117 | " | | | | | IN | | | | " | | | | OUT | | | | | | " | 1A3 to 1Y3 | " | " | " | " | " | " | " |
| | | 118 | " | | | | | | | IN | | " | | OUT | | | | | | | | " | 1A4 to 1Y4 | " | " | " | " | " | " | " |
| | | 119 | | | | | | | | | OUT | " | IN | | | | | | | | 4.5V | " | 2A1 to 2Y1 | " | " | " | " | " | " | " |
| | | 120 | | | | | | | OUT | | | " | | | IN | | | | | | " | " | 2A2 to 2Y2 | " | " | " | " | " | " | " |
| | | 121 | | | | | OUT | | | | | " | | | | | IN | | | | " | " | 2A3 to 2Y3 | " | " | " | " | " | " | " |
| | | 122 | | | OUT | | | | | | | " | | | | | | | IN | | " | " | 2A4 to 2Y4 | " | " | " | " | " | " | " |
| $t_{PLH}$ | 3003 (Fig. 3) | 123 | GND | IN | | | | | | | | " | | | | | | | | OUT | | " | 1A1 to 1Y1 | " | " | " | " | " | " | " |
| | | 124 | " | | | IN | | | | | | " | | | | | | OUT | | | | " | 1A2 to 1Y2 | " | " | " | " | " | " | " |
| | | 125 | " | | | | | IN | | | | " | | | | OUT | | | | | | " | 1A3 to 1Y3 | " | " | " | " | " | " | " |
| | | 126 | " | | | | | | | IN | | " | | OUT | | | | | | | | " | 1A4 to 1Y4 | " | " | " | " | " | " | " |
| | | 127 | | | | | | | | | OUT | " | IN | | | | | | | | 4.5V | " | 2A1 to 2Y1 | " | " | " | " | " | " | " |
| | | 128 | | | | | | | OUT | | | " | | | IN | | | | | | " | " | 2A2 to 2Y2 | " | " | " | " | " | " | " |
| | | 129 | | | | | OUT | | | | | " | | | | | IN | | | | " | " | 2A3 to 2Y3 | " | " | " | " | " | " | " |
| | | 130 | | | OUT | | | | | | | " | | | | | | | IN | | " | " | 2A4 to 2Y4 | " | " | " | " | " | " | " |

See footnotes at end of table.

TABLE III. Group A inspection for device type 04 – Continued.

| Symbol | MIL-STD-883 method | Cases R, S, and 2 | Terminal conditions 1/ | | | | | | | | | | | | | | | | | | | | Measured terminal | Test limits | | | | | | Unit |
|---|---|---|---|---|---|---|---|---|---|---|---|---|---|---|---|---|---|---|---|---|---|---|---|---|---|---|---|---|---|---|
| | | | 1 | 2 | 3 | 4 | 5 | 6 | 7 | 8 | 9 | 10 | 11 | 12 | 13 | 14 | 15 | 16 | 17 | 18 | 19 | 20 | | Subgroup 9 $T_C$ = +25°C | | Subgroup 10 $T_C$ = +125°C | | Subgroup 11 $T_C$ = -55°C | | |
| | | Test no. | $\overline{1G}$ | 1A1 | 2Y4 | 1A2 | 2Y3 | 1A3 | 2Y2 | 1A4 | 2Y1 | GND | 2A1 | 1Y4 | 2A2 | 1Y3 | 2A3 | 1Y2 | 2A4 | 1Y1 | 2G | $V_{CC}$ | | Min | Max | Min | Max | Min | Max | |
| $t_{PZH}$ | 3003 (Fig. 3) | 131 | IN | 4.5V | | | | | | | | GND | | | | | | | | OUT | | 4.5V | $\overline{1G}$ to 1Y1 | 5 | 20 | 5 | 35 | 5 | 20 | ns |
| | | 132 | " | | | 4.5V | | | | | | " | | | | | | OUT | | | | " | $\overline{1G}$ to 1Y2 | " | " | " | " | " | " | " |
| | | 133 | " | | | | | 4.5V | | | | " | | | | OUT | | | | | | " | $\overline{1G}$ to 1Y3 | " | " | " | " | " | " | " |
| | | 134 | " | | | | | | | 4.5V | | " | | OUT | | | | | | | | " | $\overline{1G}$ to 1Y4 | " | " | " | " | " | " | " |
| | | 135 | | | | | | | | | OUT | " | 4.5V | | | | | | | | IN | " | 2G to 2Y1 | " | " | " | " | " | " | " |
| | | 136 | | | | | | | OUT | | | " | | | 4.5V | | | | | | " | " | 2G to 2Y2 | " | " | " | " | " | " | " |
| | | 137 | | | | | OUT | | | | | " | | | | | 4.5V | | | | " | " | 2G to 2Y3 | " | " | " | " | " | " | " |
| | | 138 | | | OUT | | | | | | | " | | | | | | | 4.5V | | " | " | 2G to 2Y4 | " | " | " | " | " | " | " |
| $t_{PZL}$ | 3003 (Fig. 3) | 139 | IN | GND | | | | | | | | " | | | | | | | | OUT | | " | $\overline{1G}$ to 1Y1 | 5 | 26 | 5 | 35 | 5 | 26 | " |
| | | 140 | " | | | GND | | | | | | " | | | | | | OUT | | | | " | $\overline{1G}$ to 1Y2 | " | " | " | " | " | " | " |
| | | 141 | " | | | | | GND | | | | " | | | | OUT | | | | | | " | $\overline{1G}$ to 1Y3 | " | " | " | " | " | " | " |
| | | 142 | " | | | | | | | GND | | " | | OUT | | | | | | | | " | $\overline{1G}$ to 1Y4 | " | " | " | " | " | " | " |
| | | 143 | | | | | | | | | OUT | " | GND | | | | | | | | IN | " | 2G to 2Y1 | " | " | " | " | " | " | " |
| | | 144 | | | | | | | OUT | | | " | | | GND | | | | | | " | " | 2G to 2Y2 | " | " | " | " | " | " | " |
| | | 145 | | | | | OUT | | | | | " | | | | | GND | | | | " | " | 2G to 2Y3 | " | " | " | " | " | " | " |
| | | 146 | | | OUT | | | | | | | " | | | | | | | GND | | " | " | 2G to 2Y4 | " | " | " | " | " | " | " |
| $t_{PHZ}$ | 3003 (Fig. 3) | 147 | IN | 4.5V | | | | | | | | " | | | | | | | | OUT | | " | $\overline{1G}$ to 1Y1 | " | " | " | " | " | " | " |
| | | 148 | " | | | 4.5V | | | | | | " | | | | | | OUT | | | | " | $\overline{1G}$ to 1Y2 | " | " | " | " | " | " | " |
| | | 149 | " | | | | | 4.5V | | | | " | | | | OUT | | | | | | " | $\overline{1G}$ to 1Y3 | " | " | " | " | " | " | " |
| | | 150 | " | | | | | | | 4.5V | | " | | OUT | | | | | | | | " | $\overline{1G}$ to 1Y4 | " | " | " | " | " | " | " |
| | | 151 | | | | | | | | | OUT | " | 4.5V | | | | | | | | IN | " | 2G to 2Y1 | " | " | " | " | " | " | " |
| | | 152 | | | | | | | OUT | | | " | | | 4.5V | | | | | | " | " | 2G to 2Y2 | " | " | " | " | " | " | " |
| | | 153 | | | | | OUT | | | | | " | | | | | 4.5V | | | | " | " | 2G to 2Y3 | " | " | " | " | " | " | " |
| | | 154 | | | OUT | | | | | | | " | | | | | | | 4.5V | | " | " | 2G to 2Y4 | " | " | " | " | " | " | " |
| $t_{PLZ}$ | 3003 (Fig. 3) | 155 | IN | GND | | | | | | | | " | | | | | | | | OUT | | " | $\overline{1G}$ to 1Y1 | " | " | " | " | " | " | " |
| | | 156 | " | | | GND | | | | | | " | | | | | | OUT | | | | " | $\overline{1G}$ to 1Y2 | " | " | " | " | " | " | " |
| | | 157 | " | | | | | GND | | | | " | | | | OUT | | | | | | " | $\overline{1G}$ to 1Y3 | " | " | " | " | " | " | " |
| | | 158 | " | | | | | | | GND | | " | | OUT | | | | | | | | " | $\overline{1G}$ to 1Y4 | " | " | " | " | " | " | " |
| | | 159 | | | | | | | | | OUT | " | GND | | | | | | | | IN | " | 2G to 2Y1 | " | " | " | " | " | " | " |
| | | 160 | | | | | | | OUT | | | " | | | GND | | | | | | " | " | 2G to 2Y2 | " | " | " | " | " | " | " |
| | | 161 | | | | | OUT | | | | | " | | | | | GND | | | | " | " | 2G to 2Y3 | " | " | " | " | " | " | " |
| | | 162 | | | OUT | | | | | | | " | | | | | | | GND | | " | " | 2G to 2Y4 | " | " | " | " | " | " | " |
| $t_{TLH}$ | 3004 (Fig. 3) | 163 | GND | IN | | | | | | | | " | | | | | | | | OUT | | " | 1Y1 | 2 | 12 | 2 | 16 | 2 | 12 | " |
| | | 164 | " | | | IN | | | | | | " | | | | | | OUT | | | | " | 1Y2 | " | " | " | " | " | " | " |
| | | 165 | " | | | | | IN | | | | " | | | | OUT | | | | | | " | 1Y3 | " | " | " | " | " | " | " |
| | | 166 | " | | | | | | | IN | | " | | OUT | | | | | | | | " | 1Y4 | " | " | " | " | " | " | " |
| | | 167 | | | | | | | | | OUT | " | IN | | | | | | | | 4.5V | " | 2Y1 | " | " | " | " | " | " | " |
| | | 168 | | | | | | | OUT | | | " | | | IN | | | | | | " | " | 2Y2 | " | " | " | " | " | " | " |
| | | 169 | | | | | OUT | | | | | " | | | | | IN | | | | " | " | 2Y3 | " | " | " | " | " | " | " |
| | | 170 | | | OUT | | | | | | | " | | | | | | | IN | | " | " | 2Y4 | " | " | " | " | " | " | " |
| $t_{THL}$ | 3004 (Fig. 3) | 171 | GND | IN | | | | | | | | " | | | | | | | | OUT | | " | 1Y1 | " | " | " | " | " | " | " |
| | | 172 | " | | | IN | | | | | | " | | | | | | OUT | | | | " | 1Y2 | " | " | " | " | " | " | " |
| | | 173 | " | | | | | IN | | | | " | | | | OUT | | | | | | " | 1Y3 | " | " | " | " | " | " | " |
| | | 174 | " | | | | | | | IN | | " | | OUT | | | | | | | | " | 1Y4 | " | " | " | " | " | " | " |
| | | 175 | | | | | | | | | OUT | " | IN | | | | | | | | 4.5V | " | 2Y1 | " | " | " | " | " | " | " |
| | | 176 | | | | | | | OUT | | | " | | | IN | | | | | | " | " | 2Y2 | " | " | " | " | " | " | " |
| | | 177 | | | | | OUT | | | | | " | | | | | IN | | | | " | " | 2Y3 | " | " | " | " | " | " | " |
| | | 178 | | | OUT | | | | | | | " | | | | | | | IN | | " | " | 2Y4 | " | " | " | " | " | " | " |

See footnotes at end of table.

TABLE III. Group A inspection for device type 05.

| Symbol | MIL-STD-883 method | Cases R, S, and 2 | Terminal conditions 1/ | | | | | | | | | | | | | | | | | | | | Measured terminal | Test limits | | | | | | Unit |
|---|---|---|---|---|---|---|---|---|---|---|---|---|---|---|---|---|---|---|---|---|---|---|---|---|---|---|---|---|---|---|
| | | 1 | 2 | 3 | 4 | 5 | 6 | 7 | 8 | 9 | 10 | 11 | 12 | 13 | 14 | 15 | 16 | 17 | 18 | 19 | 20 | | Subgroup 1 $T_C$ = +25°C | | Subgroup 2 $T_C$ = +125°C | | Subgroup 3 $T_C$ = -55°C | | |
| | | Test no. | $\overline{1G}$ | 1A1 | 2Y4 | 1A2 | 2Y3 | 1A3 | 2Y2 | 1A4 | 2Y1 | GND | 2A1 | 1Y4 | 2A2 | 1Y3 | 2A3 | 1Y2 | 2A4 | 1Y1 | $\overline{2G}$ | $V_{CC}$ | | Min | Max | Min | Max | Min | Max | |
| $V_{IC}$ (pos) | | 1 | 1mA | | | | | | | | | OPEN | | | | | | | | | | GND | $\overline{1G}$ | 1/ | 1.5 | | | | | V |
| | | 2 | | 1mA | | | | | | | | " | | | | | | | | | | " | 1A1 | " | " | | | | | " |
| | | 3 | | | | 1mA | | | | | | " | | | | | | | | | | " | 1A2 | " | " | | | | | " |
| | | 4 | | | | | | 1mA | | | | " | | | | | | | | | | " | 1A3 | " | " | | | | | " |
| | | 5 | | | | | | | | 1mA | | " | | | | | | | | | | " | 1A4 | " | " | | | | | " |
| | | 6 | | | | | | | | | | " | 1mA | | | | | | | | | " | 2A1 | " | " | | | | | " |
| | | 7 | | | | | | | | | | " | | | 1mA | | | | | | | " | 2A2 | " | " | | | | | " |
| | | 8 | | | | | | | | | | " | | | | | 1mA | | | | | " | 2A3 | " | " | | | | | " |
| | | 9 | | | | | | | | | | " | | | | | | | 1mA | | | " | 2A4 | " | " | | | | | " |
| | | 10 | | | | | | | | | | " | | | | | | | | | 1mA | " | $\overline{2G}$ | " | " | | | | | " |
| $V_{IC}$ (neg) | | 11 | -1mA | | | | | | | | | GND | | | | | | | | | | OPEN | $\overline{1G}$ | | -1.5 | | | | | " |
| | | 12 | | -1mA | | | | | | | | " | | | | | | | | | | " | 1A1 | | " | | | | | " |
| | | 13 | | | | -1mA | | | | | | " | | | | | | | | | | " | 1A2 | | " | | | | | " |
| | | 14 | | | | | | -1mA | | | | " | | | | | | | | | | " | 1A3 | | " | | | | | " |
| | | 15 | | | | | | | | -1mA | | " | | | | | | | | | | " | 1A4 | | " | | | | | " |
| | | 16 | | | | | | | | | | " | -1mA | | | | | | | | | " | 2A1 | | " | | | | | " |
| | | 17 | | | | | | | | | | " | | | -1mA | | | | | | | " | 2A2 | | " | | | | | " |
| | | 18 | | | | | | | | | | " | | | | | -1mA | | | | | " | 2A3 | | " | | | | | " |
| | | 19 | | | | | | | | | | " | | | | | | | -1mA | | | " | 2A4 | | " | | | | | " |
| | | 20 | | | | | | | | | | " | | | | | | | | | -1mA | " | $\overline{2G}$ | | " | | | | | " |
| $I_{CCH}$ | 3005 | 21 | GND | 6V | | 6V | | 6V | | 6V | | " | 6V | | 6V | | 6V | | 6V | | GND | 6V | $V_{CC}$ | | 0.2 | | 20 | | | µA |
| $I_{CCL}$ | 3005 | 22 | GND | GND | | GND | | GND | | GND | | " | GND | | GND | | GND | | GND | | GND | " | " | | 0.2 | | 20 | | | " |
| $I_{CCZ}$ | | 23 | 6V | 6V | | 6V | | 6V | | 6V | | " | GND | | GND | | GND | | GND | | GND | " | " | | .1 | | 10 | | | " |
| | | 24 | GND | GND | | GND | | GND | | GND | | " | 6V | | 6V | | 6V | | 6V | | 6V | " | " | | .1 | | 10 | | | " |
| $V_{OH3}$ | 3006 | 25 | 1.2V | 4.2V | | | | | | | | " | | | | | | | | -20µA | | " | 1Y1 | 5.95 | | 5.95 | | 5.95 | | V |
| | | 26 | " | | | 4.2V | | | | | | " | | | | | -20µA | | | | | " | 1Y2 | " | | " | | " | | " |
| | | 27 | " | | | | | 4.2V | | | | " | | | | -20µA | | | | | | " | 1Y3 | " | | " | | " | | " |
| | | 28 | " | | | | | | | 4.2V | | " | | -20µA | | | | | | | | " | 1Y4 | " | | " | | " | | " |
| | | 29 | | | | | | | | | -20µA | " | 4.2V | | | | | | | | 1.2V | " | 2Y1 | " | | " | | " | | " |
| | | 30 | | | | | | | -20µA | | | " | | | 4.2V | | | | | | " | " | 2Y2 | " | | " | | " | | " |
| | | 31 | | | | | -20µA | | | | | " | | | | | 4.2V | | | | " | " | 2Y3 | " | | " | | " | | " |
| | | 32 | | | -20µA | | | | | | | " | | | | | | | 4.2V | | " | " | 2Y4 | " | | " | | " | | " |

See footnotes at end of table.

TABLE III. Group A inspection for device type 05 – Continued.

| Symbol | MIL-STD-883 method | Cases R, S, and 2 | Terminal conditions 1/ | | | | | | | | | | | | | | | | | | | Measured terminal | Test limits | | | | | | Unit |
|---|---|---|---|---|---|---|---|---|---|---|---|---|---|---|---|---|---|---|---|---|---|---|---|---|---|---|---|---|---|
| | | | 1 | 2 | 3 | 4 | 5 | 6 | 7 | 8 | 9 | 10 | 11 | 12 | 13 | 14 | 15 | 16 | 17 | 18 | 19 | 20 | | Subgroup 1 $T_C$ = +25°C | | Subgroup 2 $T_C$ = +125°C | | Subgroup 3 $T_C$ = -55°C | | |
| | | Test no. | $\overline{1G}$ | 1A1 | 2Y4 | 1A2 | 2Y3 | 1A3 | 2Y2 | 1A4 | 2Y1 | GND | 2A1 | 1Y4 | 2A2 | 1Y3 | 2A3 | 1Y2 | 2A4 | 1Y1 | $\overline{2G}$ | $V_{CC}$ | | Min | Max | Min | Max | Min | Max | |
| $V_{OH5}$ | 3006 | 33 | 1.2V | 4.2V | | | | | | | | GND | | | | | | | | -7.8mA | | 6V | 1Y1 | 5.48 | | 5.2 | | 5.48 | | V |
| | | 34 | " | | | 4.2V | | | | | | " | | | | | | -7.8mA | | | | " | 1Y2 | " | | " | | " | | " |
| | | 35 | " | | | | | 4.2V | | | | " | | | | -7.8mA | | | | | | " | 1Y3 | " | | " | | " | | " |
| | | 36 | " | | | | | | | 4.2V | | " | | -7.8mA | | | | | | | | " | 1Y4 | " | | " | | " | | " |
| | | 37 | | | | | | | | | -7.8mA | " | 4.2V | | | | | | | | 1.2V | " | 2Y1 | " | | " | | " | | " |
| | | 38 | | | | | | | -7.8mA | | | " | | | 4.2V | | | | | | " | " | 2Y2 | " | | " | | " | | " |
| | | 39 | | | | | -7.8mA | | | | | " | | | | | 4.2V | | | | " | " | 2Y3 | " | | " | | " | | " |
| | | 40 | | | -7.8mA | | | | | | | | | | | | | | 4.2V | | " | " | 2Y4 | " | | " | | " | | " |
| $V_{OL3}$ | 3007 | 41 | 1.2V | 1.2V | | | | | | | | " | | | | | | | | 20μA | | " | 1Y1 | | 0.05 | | 0.05 | | 0.05 | " |
| | | 42 | " | | | 1.2V | | | | | | " | | | | | | 20μA | | | | " | 1Y2 | | " | | " | | " | " |
| | | 43 | " | | | | | 1.2V | | | | " | | | | 20μA | | | | | | " | 1Y3 | | " | | " | | " | " |
| | | 44 | " | | | | | | | 1.2V | | " | | 20μA | | | | | | | | " | 1Y4 | | " | | " | | " | " |
| | | 45 | | | | | | | | | 20μA | " | 1.2V | | | | | | | | 1.2V | " | 2Y1 | | " | | " | | " | " |
| | | 46 | | | | | | | 20μA | | | " | | | 1.2V | | | | | | " | " | 2Y2 | | " | | " | | " | " |
| | | 47 | | | | | 20μA | | | | | " | | | | | 1.2V | | | | " | " | 2Y3 | | " | | " | | " | " |
| | | 48 | | | 20μA | | | | | | | " | | | | | | | 1.2V | | " | " | 2Y4 | | " | | " | | " | " |
| $V_{OL5}$ | 3007 | 49 | 1.2V | 1.2V | | | | | | | | " | | | | | | | | 7.8mA | | " | 1Y1 | | 0.26 | | 0.4 | | 0.26 | V |
| | | 50 | " | | | 1.2V | | | | | | " | | | | | | 7.8mA | | | | " | 1Y2 | | " | | " | | " | " |
| | | 51 | " | | | | | 1.2V | | | | " | | | | 7.8mA | | | | | | " | 1Y3 | | " | | " | | " | " |
| | | 52 | " | | | | | | | 1.2V | | " | | 7.8mA | | | | | | | | " | 1Y4 | | " | | " | | " | " |
| | | 53 | | | | | | | | | 7.8mA | " | 1.2V | | | | | | | | 1.2V | " | 2Y1 | | " | | " | | " | " |
| | | 54 | | | | | | | 7.8mA | | | " | | | 1.2V | | | | | | " | " | 2Y2 | | " | | " | | " | " |
| | | 55 | | | | | 7.8mA | | | | | " | | | | | 1.2V | | | | " | " | 2Y3 | | " | | " | | " | " |
| | | 56 | | | 7.8mA | | | | | | | " | | | | | | | 1.2V | | " | " | 2Y4 | | " | | " | | " | " |
| $I_{OZH}$ | | 57 | 9/ | 9/ | | | | | | | | GND | | | | | | | | 6V | | 6V | 1Y1 | | 0.2 | | 2.0 | | | μA |
| | | 58 | " | | | 9/ | | | | | | " | | | | | | 6V | | | | " | 1Y2 | | " | | " | | | " |
| | | 59 | " | | | | | 9/ | | | | " | | | | 6V | | | | | | " | 1Y3 | | " | | " | | | " |
| | | 60 | " | | | | | | | 9/ | | " | | 6V | | | | | | | | " | 1Y4 | | " | | " | | | " |
| | | 61 | | | | | | | | | 6V | " | 9/ | | | | | | | | 9/ | " | 2Y1 | | " | | " | | | " |
| | | 62 | | | | | | | 6V | | | " | | | 9/ | | | | | | " | " | 2Y2 | | " | | " | | | " |
| | | 63 | | | | | 6V | | | | | " | | | | | 9/ | | | | " | " | 2Y3 | | " | | " | | | " |
| | | 64 | | | 6V | | | | | | | " | | | | | | | 9/ | | " | " | 2Y4 | | " | | " | | | " |
| $I_{OZL}$ | | 65 | 9/ | 9/ | | | | | | | | " | | | | | | | | GND | | " | 1Y1 | | -0.2 | | -2.0 | | | μA |
| | | 66 | " | | | 9/ | | | | | | " | | | | | | GND | | | | " | 1Y2 | | " | | " | | | " |
| | | 67 | " | | | | | 9/ | | | | " | | | | GND | | | | | | " | 1Y3 | | " | | " | | | " |
| | | 68 | " | | | | | | | 9/ | | " | | GND | | | | | | | | " | 1Y4 | | " | | " | | | " |
| | | 69 | | | | | | | | | GND | " | 9/ | | | | | | | | 9/ | " | 2Y1 | | " | | " | | | " |
| | | 70 | | | | | | | GND | | | " | | | 9/ | | | | | | " | " | 2Y2 | | " | | " | | | " |
| | | 71 | | | | | GND | | | | | " | | | | | 9/ | | | | " | " | 2Y3 | | " | | " | | | " |
| | | 72 | | | GND | | | | | | | " | | | | | | | 9/ | | " | " | 2Y4 | | " | | " | | | " |
| $I_{IH}$ | 3010 | 73 | 6V | GND | | GND | | GND | | GND | | " | GND | | GND | | GND | | GND | | GND | " | $\overline{1G}$ | | .05 | | 0.1 | | | " |
| | | 74 | GND | 6V | | GND | | " | | " | | " | " | | " | | " | | " | | " | " | 1A1 | | " | | " | | | " |
| | | 75 | " | GND | | 6V | | " | | " | | " | " | | " | | " | | " | | " | " | 1A2 | | " | | " | | | " |
| | | 76 | " | " | | GND | | 6V | | " | | " | " | | " | | " | | " | | " | " | 1A3 | | " | | " | | | " |
| | | 77 | " | " | | " | | GND | | 6V | | " | " | | " | | " | | " | | " | " | 1A4 | | " | | " | | | " |
| | | 78 | " | " | | " | | " | | GND | | " | 6V | | " | | " | | " | | " | " | 2A1 | | " | | " | | | " |
| | | 79 | " | " | | " | | " | | " | | " | GND | | 6V | | " | | " | | " | " | 2A2 | | " | | " | | | " |
| | | 80 | " | " | | " | | " | | " | | " | " | | GND | | 6V | | " | | " | " | 2A3 | | " | | " | | | " |
| | | 81 | " | " | | " | | " | | " | | " | " | | " | | GND | | 6V | | " | " | 2A4 | | " | | " | | | " |
| | | 82 | " | " | | " | | " | | " | | " | " | | " | | GND | | GND | | 6V | " | $\overline{2G}$ | | " | | " | | | " |

See footnotes at end of table.

TABLE III. Group A inspection for device type 05 – Continued.

| Symbol | MIL-STD-883 method | Cases R, S, and 2 | Terminal conditions 1/ | | | | | | | | | | | | | | | | | | | | Measured terminal | Test limits | | | | | | Unit |
|---|---|---|---|---|---|---|---|---|---|---|---|---|---|---|---|---|---|---|---|---|---|---|---|---|---|---|---|---|---|---|
| | | | 1 | 2 | 3 | 4 | 5 | 6 | 7 | 8 | 9 | 10 | 11 | 12 | 13 | 14 | 15 | 16 | 17 | 18 | 19 | 20 | | Subgroup 1 $T_C$ = +25°C | | Subgroup 2 $T_C$ = +125°C | | Subgroup 3 $T_C$ = -55°C | | |
| | | Test no. | $\overline{1G}$ | 1A1 | 2Y4 | 1A2 | 2Y3 | 1A3 | 2Y2 | 1A4 | 2Y1 | GND | 2A1 | 1Y4 | 2A2 | 1Y3 | 2A3 | 1Y2 | 2A4 | 1Y1 | $\overline{2G}$ | $V_{CC}$ | | Min | Max | Min | Max | Min | Max | |
| $I_{IL}$ | 3009 | 83 | " | 6V | | 6V | | 6V | | 6V | | GND | 6V | | 6V | | 6V | | 6V | | 6V | 6V | $\overline{1G}$ | | -.05 | | -0.1 | | | µA |
| | | 84 | 6V | GND | | 6V | | " | | " | | " | " | | " | | " | | " | | " | " | 1A1 | | " | | " | | | " |
| | | 85 | " | 6V | | GND | | " | | " | | " | " | | " | | " | | " | | " | " | 1A2 | | " | | " | | | " |
| | | 86 | " | " | | 6V | | GND | | " | | " | " | | " | | " | | " | | " | " | 1A3 | | " | | " | | | " |
| | | 87 | " | " | | " | | 6V | | GND | | " | " | | " | | " | | " | | " | " | 1A4 | | " | | " | | | " |
| | | 88 | " | " | | " | | " | | 6V | | " | GND | | " | | " | | " | | " | " | 2A1 | | " | | " | | | " |
| | | 89 | " | " | | " | | " | | " | | " | 6V | | GND | | " | | " | | " | " | 2A2 | | " | | " | | | " |
| | | 90 | " | " | | " | | " | | " | | " | " | | 6V | | GND | | " | | " | " | 2A3 | | " | | " | | | " |
| | | 91 | " | " | | " | | " | | " | | " | " | | " | | 6V | | GND | | " | " | 2A4 | | " | | " | | | " |
| | | 92 | " | " | | " | | " | | " | | " | " | | " | | 6V | | 6V | | GND | " | 2G | | " | | " | | | " |
| $I_{OS4}$ | 3011 | 93 | GND | 4V | | 4V | | 4V | | 4V | | " | 4V | | 4V | | 4V | | 4V | GND | | 4V | 1Y1 | -10 | -135 | -10 | -135 | -10 | -135 | mA |
| | | 94 | " | " | | " | | " | | " | | " | " | | " | | " | GND | " | | | " | 1Y2 | " | " | " | " | " | " | " |
| | | 95 | " | " | | " | | " | | " | | " | " | | " | GND | " | | " | | | " | 1Y3 | " | " | " | " | " | " | " |
| | | 96 | " | " | | " | | " | | " | | " | " | GND | " | | " | | " | | | " | 1Y4 | " | " | " | " | " | " | " |
| | | 97 | | " | | " | | " | | " | GND | " | " | | " | | " | | " | | GND | " | 2Y1 | " | " | " | " | " | " | " |
| | | 98 | | " | | " | | " | GND | " | | " | " | | " | | " | | " | | " | " | 2Y2 | " | " | " | " | " | " | " |
| | | 99 | | " | | " | GND | " | | " | | " | " | | " | | " | | " | | " | " | 2Y3 | " | " | " | " | " | " | " |
| | | 100 | | " | GND | " | | " | | " | | " | " | | " | | " | | " | | " | " | 2Y4 | " | " | " | " | " | " | " |
| | | | | | | | | | | | | | | | | | | | | | | | | Subgroup 9 $T_C$ = +25°C | | Subgroup 10 $T_C$ = +125°C | | Subgroup 11 $T_C$ = -55°C | | |
| | | | | | | | | | | | | | | | | | | | | | | | | Min | Max | Min | Max | Min | Max | |
| $t_{PHL}$ | 3003 (Fig. 3) | 101 | GND | IN | | | | | | | | " | | | | | | | | OUT | | 4.5V | 1A1 to 1Y1 | 5 | 20 | 5 | 27 | 5 | 20 | ns |
| | | 102 | " | | | IN | | | | | | " | | | | | | OUT | | | | " | 1A2 to 1Y2 | " | " | " | " | " | " | " |
| | | 103 | " | | | | | IN | | | | " | | | | OUT | | | | | | " | 1A3 to 1Y3 | " | " | " | " | " | " | " |
| | | 104 | " | | | | | | | IN | | " | | OUT | | | | | | | | " | 1A4 to 1Y4 | " | " | " | " | " | " | " |
| | | 105 | | | | | | | | | OUT | " | IN | | | | | | | | GND | " | 2A1 to 2Y1 | " | " | " | " | " | " | " |
| | | 106 | | | | | | | OUT | | | " | | | IN | | | | | | " | " | 2A2 to 2Y2 | " | " | " | " | " | " | " |
| | | 107 | | | | | OUT | | | | | " | | | | | IN | | | | " | " | 2A3 to 2Y3 | " | " | " | " | " | " | " |
| | | 108 | | | OUT | | | | | | | " | | | | | | | IN | | " | " | 2A4 to 2Y4 | " | " | " | " | " | " | " |
| $t_{PLH}$ | 3003 (Fig. 3) | 109 | GND | IN | | | | | | | | " | | | | | | | | OUT | | " | 1A1 to 1Y1 | " | " | " | " | " | " | " |
| | | 110 | " | | | IN | | | | | | " | | | | | | OUT | | | | " | 1A2 to 1Y2 | " | " | " | " | " | " | " |
| | | 111 | " | | | | | IN | | | | " | | | | OUT | | | | | | " | 1A3 to 1Y3 | " | " | " | " | " | " | " |
| | | 112 | " | | | | | | | IN | | " | | OUT | | | | | | | | " | 1A4 to 1Y4 | " | " | " | " | " | " | " |
| | | 113 | | | | | | | | | OUT | " | IN | | | | | | | | GND | " | 2A1 to 2Y1 | " | " | " | " | " | " | " |
| | | 114 | | | | | | | OUT | | | " | | | IN | | | | | | " | " | 2A2 to 2Y2 | " | " | " | " | " | " | " |
| | | 115 | | | | | OUT | | | | | " | | | | | IN | | | | " | " | 2A3 to 2Y3 | " | " | " | " | " | " | " |
| | | 116 | | | OUT | | | | | | | " | | | | | | | IN | | " | " | 2A4 to 2Y4 | " | " | " | " | " | " | " |

See footnotes at end of table.

TABLE III. Group A inspection for device type 05 – Continued.

| Symbol | MIL-STD-883 method | Cases R, S, and 2 | Terminal conditions 1/ | | | | | | | | | | | | | | | | | | | | Measured terminal | Test limits | | | | | | Unit |
|---|---|---|---|---|---|---|---|---|---|---|---|---|---|---|---|---|---|---|---|---|---|---|---|---|---|---|---|---|---|---|
| | | | 1 | 2 | 3 | 4 | 5 | 6 | 7 | 8 | 9 | 10 | 11 | 12 | 13 | 14 | 15 | 16 | 17 | 18 | 19 | 20 | | Subgroup 9 $T_C$ = +25°C | | Subgroup 10 $T_C$ = +125°C | | Subgroup 11 $T_C$ = -55°C | | |
| | | Test no. | $\overline{1G}$ | 1A1 | 2Y4 | 1A2 | 2Y3 | 1A3 | 2Y2 | 1A4 | 2Y1 | GND | 2A1 | 1Y4 | 2A2 | 1Y3 | 2A3 | 1Y2 | 2A4 | 1Y1 | $\overline{2G}$ | $V_{CC}$ | | Min | Max | Min | Max | Min | Max | |
| $t_{PZL}$ | 3003 (Fig. 3) | 117 | IN | GND | | | | | | | | GND | | | | | | | | OUT | | 4.5V | $\overline{1G}$ to 1Y1 | 5 | 26 | 5 | 35 | 5 | 26 | ns |
| | | 118 | " | | | GND | | | | | | " | | | | | | OUT | | | | " | $\overline{1G}$ to 1Y2 | " | " | " | " | " | " | " |
| | | 119 | " | | | | | GND | | | | " | | | | OUT | | | | | | " | $\overline{1G}$ to 1Y3 | " | " | " | " | " | " | " |
| | | 120 | " | | | | | | | GND | | " | | OUT | | | | | | | | " | $\overline{1G}$ to 1Y4 | " | " | " | " | " | " | " |
| | | 121 | | | | | | | | | OUT | " | GND | | | | | | | | IN | " | $\overline{2G}$ to 2Y1 | " | " | " | " | " | " | " |
| | | 122 | | | | | | | OUT | | | " | | | GND | | | | | | " | " | $\overline{2G}$ to 2Y2 | " | " | " | " | " | " | " |
| | | 123 | | | | | OUT | | | | | " | | | | | GND | | | | " | " | $\overline{2G}$ to 2Y3 | " | " | " | " | " | " | " |
| | | 124 | | | OUT | | | | | | | " | | | | | | | GND | | " | " | $\overline{2G}$ to 2Y4 | " | " | " | " | " | " | " |
| $t_{PZH}$ | 3003 (Fig. 3) | 125 | IN | 4.5V | | | | | | | | " | | | | | | | | OUT | | " | $\overline{1G}$ to 1Y1 | " | " | " | " | " | " | " |
| | | 126 | " | | | 4.5V | | | | | | " | | | | | | OUT | | | | " | $\overline{1G}$ to 1Y2 | " | " | " | " | " | " | " |
| | | 127 | " | | | | | 4.5V | | | | " | | | | OUT | | | | | | " | $\overline{1G}$ to 1Y3 | " | " | " | " | " | " | " |
| | | 128 | " | | | | | | | 4.5V | | " | | OUT | | | | | | | | " | $\overline{1G}$ to 1Y4 | " | " | " | " | " | " | " |
| | | 129 | | | | | | | | | OUT | " | 4.5V | | | | | | | | IN | " | $\overline{2G}$ to 2Y1 | " | " | " | " | " | " | " |
| | | 130 | | | | | | | OUT | | | " | | | 4.5V | | | | | | " | " | $\overline{2G}$ to 2Y2 | " | " | " | " | " | " | " |
| | | 131 | | | | | OUT | | | | | " | | | | | 4.5V | | | | " | " | $\overline{2G}$ to 2Y3 | " | " | " | " | " | " | " |
| | | 132 | | | OUT | | | | | | | " | | | | | | | 4.5V | | " | " | $\overline{2G}$ to 2Y4 | " | " | " | " | " | " | " |
| $t_{PLZ}$ | 3003 (Fig. 3) | 133 | IN | GND | | | | | | | | " | | | | | | | | OUT | | " | $\overline{1G}$ to 1Y1 | " | " | " | " | " | " | " |
| | | 134 | " | | | GND | | | | | | " | | | | | | OUT | | | | " | $\overline{1G}$ to 1Y2 | " | " | " | " | " | " | " |
| | | 135 | " | | | | | GND | | | | " | | | | OUT | | | | | | " | $\overline{1G}$ to 1Y3 | " | " | " | " | " | " | " |
| | | 136 | " | | | | | | | GND | | " | | OUT | | | | | | | | " | $\overline{1G}$ to 1Y4 | " | " | " | " | " | " | " |
| | | 137 | | | | | | | | | OUT | " | GND | | | | | | | | IN | " | $\overline{2G}$ to 2Y1 | " | " | " | " | " | " | " |
| | | 138 | | | | | | | OUT | | | " | | | GND | | | | | | " | " | $\overline{2G}$ to 2Y2 | " | " | " | " | " | " | " |
| | | 139 | | | | | OUT | | | | | " | | | | | GND | | | | " | " | $\overline{2G}$ to 2Y3 | " | " | " | " | " | " | " |
| | | 140 | | | OUT | | | | | | | " | | | | | | | GND | | " | " | $\overline{2G}$ to 2Y4 | " | " | " | " | " | " | " |
| $t_{PHZ}$ | 3003 (Fig. 3) | 141 | IN | 4.5V | | | | | | | | " | | | | | | | | OUT | | " | $\overline{1G}$ to 1Y1 | " | " | " | " | " | " | " |
| | | 142 | " | | | 4.5V | | | | | | " | | | | | | OUT | | | | " | $\overline{1G}$ to 1Y2 | " | " | " | " | " | " | " |
| | | 143 | " | | | | | 4.5V | | | | " | | | | OUT | | | | | | " | $\overline{1G}$ to 1Y3 | " | " | " | " | " | " | " |
| | | 144 | " | | | | | | | 4.5V | | " | | OUT | | | | | | | | " | $\overline{1G}$ to 1Y4 | " | " | " | " | " | " | " |
| | | 145 | | | | | | | | | OUT | " | 4.5V | | | | | | | | IN | " | $\overline{2G}$ to 2Y1 | " | " | " | " | " | " | " |
| | | 146 | | | | | | | OUT | | | " | | | 4.5V | | | | | | " | " | $\overline{2G}$ to 2Y2 | " | " | " | " | " | " | " |
| | | 147 | | | | | OUT | | | | | " | | | | | 4.5V | | | | " | " | $\overline{2G}$ to 2Y3 | " | " | " | " | " | " | " |
| | | 148 | | | OUT | | | | | | | " | | | | | | | 4.5V | | " | " | $\overline{2G}$ to 2Y4 | " | " | " | " | " | " | " |
| $t_{TLH}$ | 3004 (Fig. 3) | 149 | GND | IN | | | | | | | | " | | | | | | | | OUT | | " | 1Y1 | 1 | 12 | 1 | 16 | 1 | 12 | " |
| | | 150 | " | | | IN | | | | | | " | | | | | | OUT | | | | " | 1Y2 | " | " | " | " | " | " | " |
| | | 151 | " | | | | | IN | | | | " | | | | OUT | | | | | | " | 1Y3 | " | " | " | " | " | " | " |
| | | 152 | " | | | | | | | IN | | " | | OUT | | | | | | | | " | 1Y4 | " | " | " | " | " | " | " |
| | | 153 | | | | | | | | | OUT | " | IN | | | | | | | | GND | " | 2Y1 | " | " | " | " | " | " | " |
| | | 154 | | | | | | | OUT | | | " | | | IN | | | | | | " | " | 2Y2 | " | " | " | " | " | " | " |
| | | 155 | | | | | OUT | | | | | " | | | | | IN | | | | " | " | 2Y3 | " | " | " | " | " | " | " |
| | | 156 | | | OUT | | | | | | | " | | | | | | | IN | | " | " | 2Y4 | " | " | " | " | " | " | " |
| $t_{THL}$ | 3004 (Fig. 3) | 157 | GND | IN | | | | | | | | " | | | | | | | | OUT | | " | 1Y1 | " | " | " | " | " | " | " |
| | | 158 | " | | | IN | | | | | | " | | | | | | OUT | | | | " | 1Y2 | " | " | " | " | " | " | " |
| | | 159 | " | | | | | IN | | | | " | | | | OUT | | | | | | " | 1Y3 | " | " | " | " | " | " | " |
| | | 160 | " | | | | | | | IN | | " | | OUT | | | | | | | | " | 1Y4 | " | " | " | " | " | " | " |
| | | 161 | | | | | | | | | OUT | " | IN | | | | | | | | GND | " | 2Y1 | " | " | " | " | " | " | " |
| | | 162 | | | | | | | OUT | | | " | | | IN | | | | | | " | " | 2Y2 | " | " | " | " | " | " | " |
| | | 163 | | | | | OUT | | | | | " | | | | | IN | | | | " | " | 2Y3 | " | " | " | " | " | " | " |
| | | 164 | | | OUT | | | | | | | " | | | | | | | IN | | " | " | 2Y4 | " | " | " | " | " | " | " |

See footnotes at end of table.

TABLE III. Group A inspection for device type 06.

| Symbol | MIL-STD-883 method | Case 2 | Terminal conditions 1/ 2 | 3 | 4 | 5 | 7 | 8 | 9 | 10 | 12 | 13 | 14 | 15 | 17 | 18 | 19 | 20 | Measured terminal | Subgroup 1 $T_C$ = +25°C Min | Subgroup 1 Max | Subgroup 2 $T_C$ = +125°C Min | Subgroup 2 Max | Subgroup 3 $T_C$ = -55°C Min | Subgroup 3 Max | Unit |
|---|---|---|---|---|---|---|---|---|---|---|---|---|---|---|---|---|---|---|---|---|---|---|---|---|---|---|
| | | E and F | 1 | 2 | 3 | 4 | 5 | 6 | 7 | 8 | 9 | 10 | 11 | 12 | 13 | 14 | 15 | 16 | | | | | | | | |
| | | Test no. | $\overline{E1}$ | 1A | 1Y | 2A | 2Y | 3A | 3Y | GND | 4Y | 4A | 5Y | 5A | 6Y | 6A | $\overline{E2}$ | $V_{CC}$ | | | | | | | | |
| $V_{IC}$ (pos) | | 1 | 1mA | | | | | | | OPEN | | | | | | | | GND | $\overline{E1}$ | 1/ | 1.5 | | | | | V |
| | | 2 | | 1mA | | | | | | " | | | | | | | | " | 1A | " | " | | | | | " |
| | | 3 | | | | 1mA | | | | " | | | | | | | | " | 2A | " | " | | | | | " |
| | | 4 | | | | | | 1mA | | " | | | | | | | | " | 3A | " | " | | | | | " |
| | | 5 | | | | | | | | " | | 1mA | | | | | | " | 4A | " | " | | | | | " |
| | | 6 | | | | | | | | " | | | | 1mA | | | | " | 5A | " | " | | | | | " |
| | | 7 | | | | | | | | " | | | | | | 1mA | | " | 6A | " | " | | | | | " |
| | | 8 | | | | | | | | " | | | | | | | 1mA | " | $\overline{E2}$ | " | " | | | | | " |
| $V_{IC}$ (neg) | | 9 | -1mA | | | | | | | GND | | | | | | | | OPEN | $\overline{E1}$ | | -1.5 | | | | | " |
| | | 10 | | -1mA | | | | | | " | | | | | | | | " | 1A | | " | | | | | " |
| | | 11 | | | | -1mA | | | | " | | | | | | | | " | 2A | | " | | | | | " |
| | | 12 | | | | | | -1mA | | " | | | | | | | | " | 3A | | " | | | | | " |
| | | 13 | | | | | | | | " | | -1mA | | | | | | " | 4A | | " | | | | | " |
| | | 14 | | | | | | | | " | | | | -1mA | | | | " | 5A | | " | | | | | " |
| | | 15 | | | | | | | | " | | | | | | -1mA | | " | 6A | | " | | | | | " |
| | | 16 | | | | | | | | " | | | | | | | -1mA | " | $\overline{E2}$ | | " | | | | | " |
| $I_{CC}$ | 3005 | 17 | GND | GND | | GND | | GND | | " | | GND | | GND | | GND | GND | 6V | $V_{CC}$ | | 0.2 | | 20 | | | µA |
| $I_{CC}$ | 3005 | 18 | GND | 6V | | 6V | | 6V | | " | | 6V | | 6V | | 6V | " | " | " | | 0.2 | | 20 | | | " |
| $I_{CCZ}$ | | 19 | 6V | 6V | | 6V | | 6V | | " | | GND | | GND | | GND | " | " | " | | 0.1 | | 10 | | | " |
| | | 20 | GND | GND | | GND | | GND | | " | | 6V | | 6V | | 6V | 6V | " | " | | 0.1 | | 10 | | | " |
| $V_{OH3}$ | 3006 | 21 | 1.2V | 4.2V | -20µA | | | | | " | | | | | | | 1.2V | 6.0V | 1Y | 5.95 | | 5.95 | | 5.95 | | V |
| | | 22 | " | | | 4.2V | -20µA | | | " | | | | | | | " | " | 2Y | " | | " | | " | | " |
| | | 23 | " | | | | | 4.2V | -20µA | " | | | | | | | " | " | 3Y | " | | " | | " | | " |
| | | 24 | " | | | | | | | " | -20µA | 4.2V | | | | | " | " | 4Y | " | | " | | " | | " |
| | | 25 | " | | | | | | | " | | | -20µA | 4.2V | | | " | " | 5Y | " | | " | | " | | " |
| | | 26 | " | | | | | | | " | | | | | -20µA | 4.2V | " | " | 6Y | " | | " | | " | | " |
| $V_{OH5}$ | 3006 | 27 | " | 4.2V | -7.8mA | | | | | " | | | | | | | " | " | 1Y | 5.48 | | 5.2 | | 5.48 | | " |
| | | 28 | " | | | 4.2V | -7.8mA | | | " | | | | | | | " | " | 2Y | " | | " | | " | | " |
| | | 29 | " | | | | | 4.2V | -7.8mA | " | | | | | | | " | " | 3Y | " | | " | | " | | " |
| | | 30 | " | | | | | | | " | -7.8mA | 4.2V | | | | | " | " | 4Y | " | | " | | " | | " |
| | | 31 | " | | | | | | | " | | | -7.8mA | 4.2V | | | " | " | 5Y | " | | " | | " | | " |
| | | 32 | " | | | | | | | " | | | | | -7.8mA | 4.2V | " | " | 6Y | " | | " | | " | | " |
| $V_{OL3}$ | 3007 | 33 | " | 1.2V | 20µA | | | | | " | | | | | | | " | " | 1Y | | 0.05 | | 0.05 | | 0.05 | " |
| | | 34 | " | | | 1.2V | 20µA | | | " | | | | | | | " | " | 2Y | | " | | " | | " | " |
| | | 35 | " | | | | | 1.2V | 20µA | " | | | | | | | " | " | 3Y | | " | | " | | " | " |
| | | 36 | " | | | | | | | " | 20µA | 1.2V | | | | | " | " | 4Y | | " | | " | | " | " |
| | | 37 | " | | | | | | | " | | | 20µA | 1.2V | | | " | " | 5Y | | " | | " | | " | " |
| | | 38 | " | | | | | | | " | | | | | 20µA | 1.2V | " | " | 6Y | | " | | " | | " | " |
| $V_{OL5}$ | 3007 | 39 | " | 1.2V | 7.8mA | | | | | " | | | | | | | " | " | 1Y | | 0.26 | | 0.4 | | 0.26 | " |
| | | 40 | " | | | 1.2V | 7.8mA | | | " | | | | | | | " | " | 2Y | | " | | " | | " | " |
| | | 41 | " | | | | | 1.2V | 7.8mA | " | | | | | | | " | " | 3Y | | " | | " | | " | " |
| | | 42 | " | | | | | | | " | 7.8mA | 1.2V | | | | | " | " | 4Y | | " | | " | | " | " |
| | | 43 | " | | | | | | | " | | | 7.8mA | 1.2V | | | " | " | 5Y | | " | | " | | " | " |
| | | 44 | " | | | | | | | " | | | | | 7.8mA | 1.2V | " | " | 6Y | | " | | " | | " | " |
| $I_{OZH}$ | | 45 | 0.8V | 9/ | 6V | | | | | " | | | | | | | 9/ | " | 1Y | | 0.2 | | 2.0 | | | µA |
| | | 46 | " | | | 9/ | 6V | | | " | | | | | | | " | " | 2Y | | " | | " | | | " |
| | | 47 | " | | | | | 9/ | 6V | " | | | | | | | " | " | 3Y | | " | | " | | | " |
| | | 48 | " | | | | | | | " | 6V | 9/ | | | | | " | " | 4Y | | " | | " | | | " |
| | | 49 | " | | | | | | | " | | | 6V | 9/ | | | " | " | 5Y | | " | | " | | | " |
| | | 50 | " | | | | | | | " | | | | | 6V | 9/ | " | " | 6Y | | " | | " | | | " |
| $I_{OZL}$ | | 51 | 9/ | 9/ | GND | | | | | " | | | | | | | 0.8V | " | 1Y | | -0.2 | | -2.0 | | | " |
| | | 52 | " | | | 9/ | GND | | | " | | | | | | | " | " | 2Y | | " | | " | | | " |
| | | 53 | " | | | | | 9/ | GND | " | | | | | | | " | " | 3Y | | " | | " | | | " |
| | | 54 | " | | | | | | | " | GND | 9/ | | | | | " | " | 4Y | | " | | " | | | " |
| | | 55 | " | | | | | | | " | | | GND | 9/ | | | " | " | 5Y | | " | | " | | | " |
| | | 56 | " | | | | | | | " | | | | | GND | 9/ | " | " | 6Y | | " | | " | | | " |

See footnotes at end of table.

TABLE III. Group A inspection for device type 06 – Continued.

| Symbol | MIL-STD-883 method | Case | Terminal conditions 1/ | | | | | | | | | | | | | | | | Measured terminal | Subgroup 1 $T_C$ = +25°C | | Subgroup 2 $T_C$ = +125°C | | Subgroup 3 $T_C$ = -55°C | | Unit |
|---|---|---|---|---|---|---|---|---|---|---|---|---|---|---|---|---|---|---|---|---|---|---|---|---|---|---|
| | | 2 | 2 | 3 | 4 | 5 | 7 | 8 | 9 | 10 | 12 | 13 | 14 | 15 | 17 | 18 | 19 | 20 | | | | | | | | |
| | | E and F | 1 | 2 | 3 | 4 | 5 | 6 | 7 | 8 | 9 | 10 | 11 | 12 | 13 | 14 | 15 | 16 | | | | | | | | |
| | | Test no. | $\overline{E1}$ | 1A | 1Y | 2A | 2Y | 3A | 3Y | GND | 4Y | 4A | 5Y | 5A | 6Y | 6A | $\overline{E2}$ | $V_{CC}$ | | Min | Max | Min | Max | Min | Max | |
| $I_{IH}$ | 3010 | 57 | 6V | GND | | GND | | GND | | GND | | GND | | GND | | GND | GND | 6V | E1 | | .05 | | 0.1 | | | µA |
| | | 58 | GND | 6V | | GND | | " | | " | | " | | " | | " | " | " | 1A | | " | | " | | | " |
| | | 59 | " | GND | | 6V | | " | | " | | " | | " | | " | " | " | 2A | | " | | " | | | " |
| | | 60 | " | " | | GND | | 6V | | " | | " | | " | | " | " | " | 3A | | " | | " | | | " |
| | | 61 | " | " | | " | | GND | | " | | 6V | | " | | " | " | " | 4A | | " | | " | | | " |
| | | 62 | " | " | | " | | " | | " | | GND | | 6V | | " | " | " | 5A | | " | | " | | | " |
| | | 63 | " | " | | " | | " | | " | | " | | GND | | 6V | " | " | 6A | | " | | " | | | " |
| | | 64 | " | " | | " | | " | | " | | " | | " | | GND | 6V | " | $\overline{E2}$ | | " | | " | | | " |
| $I_{IL}$ | 3009 | 65 | " | 6V | | 6V | | 6V | | " | | 6V | | 6V | | 6V | " | " | E1 | | -.05 | | -0.1 | | | " |
| | | 66 | 6V | GND | | 6V | | " | | " | | " | | " | | " | " | " | 1A | | " | | " | | | " |
| | | 67 | " | 6V | | GND | | " | | " | | " | | " | | " | " | " | 2A | | " | | " | | | " |
| | | 68 | " | " | | 6V | | GND | | " | | " | | " | | " | " | " | 3A | | " | | " | | | " |
| | | 69 | " | " | | " | | 6V | | " | | GND | | " | | " | " | " | 4A | | " | | " | | | " |
| | | 70 | " | " | | " | | " | | " | | 6V | | GND | | " | " | " | 5A | | " | | " | | | " |
| | | 71 | " | " | | " | | " | | " | | " | | 6V | | GND | " | " | 6A | | " | | " | | | " |
| | | 72 | " | " | | " | | " | | " | | " | | 6V | | 6V | GND | " | $\overline{E2}$ | | " | | " | | | " |
| $I_{OS4}$ | 3011 | 73 | GND | 4V | GND | | | | | " | | | | | | | GND | 4V | 1Y | -10 | -135 | -10 | -135 | -10 | -135 | mA |
| | | 74 | " | | | 4V | GND | | | " | | | | | | | " | " | 2Y | " | " | " | " | " | " | " |
| | | 75 | " | | | | | 4V | GND | " | | | | | | | " | " | 3Y | " | " | " | " | " | " | " |
| | | 76 | " | | | | | | | " | GND | 4V | | | | | " | " | 4Y | " | " | " | " | " | " | " |
| | | 77 | " | | | | | | | " | | | GND | 4V | | | " | " | 5Y | " | " | " | " | " | " | " |
| | | 78 | " | | | | | | | " | | | | | GND | 4V | " | " | 6Y | " | " | " | " | " | " | " |
| | | | | | | | | | | | | | | | | | | | | Subgroup 4 $T_C$ = +25°C | | | | | | |
| | | | | | | | | | | | | | | | | | | | | Min | Max | | | | | |
| $C_i$ | 3012 | 79 | 2/ | | | | | | | GND | | | | | | | | GND | $\overline{E1}$ | | 10 | | | | | pF |
| | | 80 | | 2/ | | | | | | " | | | | | | | | " | 1A | | " | | | | | " |
| | | 81 | | | | 2/ | | | | " | | | | | | | | " | 2A | | " | | | | | " |
| | | 82 | | | | | | 2/ | | " | | | | | | | | " | 3A | | " | | | | | " |
| | | 83 | | | | | | | | " | | 2/ | | | | | | " | 4A | | " | | | | | " |
| | | 84 | | | | | | | | " | | | | 2/ | | | | " | 5A | | " | | | | | " |
| | | 85 | | | | | | | | " | | | | | | 2/ | | " | 6A | | " | | | | | " |
| | | 86 | | | | | | | | " | | | | | | | 2/ | " | $\overline{E2}$ | | " | | | | | " |
| $C_o$ | 3012 | 87 | 6V | | 2/ | | 2/ | | 2/ | " | | | | | | | GND | 6V | Y's | | 20 | | | | | " |
| | | 88 | GND | | | | | | | " | 2/ | | 2/ | | 2/ | | 6V | 6V | Y's | | 20 | | | | | " |
| | | | | | | | | | | | | | | | | | | | | Subgroup 9 $T_C$ = +25°C | | Subgroup 10 $T_C$ = +125°C | | Subgroup 11 $T_C$ = -55°C | | |
| | | | | | | | | | | | | | | | | | | | | Min | Max | Min | Max | Min | Max | |
| $t_{PHL}$ | 3003 (Fig. 3) | 89 | GND | IN | OUT | | | | | " | | | | | | | GND | 4.5V | 1A to 1Y | 5 | 21 | 5 | 28 | 5 | 21 | ns |
| | | 90 | " | | | IN | OUT | | | " | | | | | | | " | " | 2A to 2Y | " | " | " | " | " | " | " |
| | | 91 | " | | | | | IN | OUT | " | | | | | | | " | " | 3A to 3Y | " | " | " | " | " | " | " |
| | | 92 | " | | | | | | | " | OUT | IN | | | | | " | " | 4A to 4Y | " | " | " | " | " | " | " |
| | | 93 | " | | | | | | | " | | | OUT | IN | | | " | " | 5A to 5Y | " | " | " | " | " | " | " |
| | | 94 | " | | | | | | | " | | | | | OUT | IN | " | " | 6A to 6Y | " | " | " | " | " | " | " |
| $t_{PLH}$ | 3003 (Fig. 3) | 95 | " | IN | OUT | | | | | " | | | | | | | " | " | 1A to 1Y | " | " | " | " | " | " | " |
| | | 96 | " | | | IN | OUT | | | " | | | | | | | " | " | 2A to 2Y | " | " | " | " | " | " | " |
| | | 97 | " | | | | | IN | OUT | " | | | | | | | " | " | 3A to 3Y | " | " | " | " | " | " | " |
| | | 98 | " | | | | | | | " | OUT | IN | | | | | " | " | 4A to 4Y | " | " | " | " | " | " | " |
| | | 99 | " | | | | | | | " | | | OUT | IN | | | " | " | 5A to 5Y | " | " | " | " | " | " | " |
| | | 100 | " | | | | | | | " | | | | | OUT | IN | " | " | 6A to 6Y | " | " | " | " | " | " | " |
| $t_{PZH}$ | 3003 (Fig. 3) | 101 | IN | 4.5V | OUT | | | | | " | | | | | | | " | " | $\overline{E1}$ to 1Y | " | 38 | " | 51 | " | 38 | " |
| | | 102 | " | | | 4.5V | OUT | | | " | | | | | | | " | " | $\overline{E1}$ to 2Y | " | " | " | " | " | " | " |
| | | 103 | " | | | | | 4.5V | OUT | " | | | | | | | " | " | $\overline{E1}$ to 3Y | " | " | " | " | " | " | " |
| | | 104 | " | | | | | | | " | OUT | 4.5V | | | | | " | " | $\overline{E1}$ to 4Y | " | " | " | " | " | " | " |
| | | 105 | " | | | | | | | " | | | OUT | 4.5V | | | " | " | $\overline{E1}$ to 5Y | " | " | " | " | " | " | " |
| | | 106 | " | | | | | | | " | | | | | OUT | 4.5V | " | " | $\overline{E1}$ to 6Y | " | " | " | " | " | " | " |
| | | 107 | GND | 4.5V | OUT | | | | | " | | | | | | | IN | " | $\overline{E2}$ to 1Y | " | " | " | " | " | " | " |
| | | 108 | " | | | 4.5V | OUT | | | " | | | | | | | " | " | $\overline{E2}$ to 2Y | " | " | " | " | " | " | " |
| | | 109 | " | | | | | 4.5V | OUT | " | | | | | | | " | " | $\overline{E2}$ to 3Y | " | " | " | " | " | " | " |
| | | 110 | " | | | | | | | " | OUT | 4.5V | | | | | " | " | $\overline{E2}$ to 4Y | " | " | " | " | " | " | " |
| | | 111 | " | | | | | | | " | | | OUT | 4.5V | | | " | " | $\overline{E2}$ to 5Y | " | " | " | " | " | " | " |
| | | 112 | " | | | | | | | " | | | | | OUT | 4.5V | " | " | E2 to 6Y | " | " | " | " | " | " | " |

See footnotes at end of table.

TABLE III. Group A inspection for device type 06 – Continued.

| Symbol | MIL-STD-883 method | Case 2 | Terminal conditions 1/ 2 | 3 | 4 | 5 | 7 | 8 | 9 | 10 | 12 | 13 | 14 | 15 | 17 | 18 | 19 | 20 | Measured terminal | Subgroup 9 $T_C$ = +25°C | | Subgroup 10 $T_C$ = +125°C | | Subgroup 11 $T_C$ = -55°C | | Unit |
|---|---|---|---|---|---|---|---|---|---|---|---|---|---|---|---|---|---|---|---|---|---|---|---|---|---|---|
| | | E and F | 1 | 2 | 3 | 4 | 5 | 6 | 7 | 8 | 9 | 10 | 11 | 12 | 13 | 14 | 15 | 16 | | | | | | | | |
| | | Test no. | $\overline{E1}$ | 1A | 1Y | 2A | 2Y | 3A | 3Y | GND | 4Y | 4A | 5Y | 5A | 6Y | 6A | $\overline{E2}$ | $V_{CC}$ | | Min | Max | Min | Max | Min | Max | |
| $t_{PZL}$ | 3003 (Fig. 3) | 113 | IN | GND | OUT | GND | OUT | GND | OUT | GND | OUT | GND | OUT | GND | OUT | GND | GND | 4.5V | $\overline{E1}$ to 1Y | 5 | 38 | 5 | 51 | 5 | 38 | ns |
| | | 114 | " | | | | | | | " | | | | | | | " | " | $\overline{E1}$ to 2Y | " | " | " | " | " | " | " |
| | | 115 | " | | | | | | | " | | | | | | | " | " | $\overline{E1}$ to 3Y | " | " | " | " | " | " | " |
| | | 116 | " | | | | | | | " | | | | | | | " | " | $\overline{E1}$ to 4Y | " | " | " | " | " | " | " |
| | | 117 | " | | | | | | | " | | | | | | | " | " | $\overline{E1}$ to 5Y | " | " | " | " | " | " | " |
| | | 118 | " | | | | | | | " | | | | | | | " | " | E1 to 6Y | " | " | " | " | " | " | " |
| | | 119 | GND | GND | OUT | GND | OUT | GND | OUT | " | OUT | GND | OUT | GND | OUT | GND | IN | " | $\overline{E2}$ to 1Y | " | " | " | " | " | " | " |
| | | 120 | " | | | | | | | " | | | | | | | " | " | $\overline{E2}$ to 2Y | " | " | " | " | " | " | " |
| | | 121 | " | | | | | | | " | | | | | | | " | " | $\overline{E2}$ to 3Y | " | " | " | " | " | " | " |
| | | 122 | " | | | | | | | " | | | | | | | " | " | $\overline{E2}$ to 4Y | " | " | " | " | " | " | " |
| | | 123 | " | | | | | | | " | | | | | | | " | " | $\overline{E2}$ to 5Y | " | " | " | " | " | " | " |
| | | 124 | " | | | | | | | " | | | | | | | " | " | $\overline{E2}$ to 6Y | " | " | " | " | " | " | " |
| $t_{PLZ}$ | 3003 (Fig. 3) | 125 | IN | GND | OUT | GND | OUT | GND | OUT | " | OUT | GND | OUT | GND | OUT | GND | GND | " | $\overline{E1}$ to 1Y | " | " | " | " | " | " | " |
| | | 126 | " | | | | | | | " | | | | | | | " | " | $\overline{E1}$ to 2Y | " | " | " | " | " | " | " |
| | | 127 | " | | | | | | | " | | | | | | | " | " | $\overline{E1}$ to 3Y | " | " | " | " | " | " | " |
| | | 128 | " | | | | | | | " | | | | | | | " | " | $\overline{E1}$ to 4Y | " | " | " | " | " | " | " |
| | | 129 | " | | | | | | | " | | | | | | | " | " | $\overline{E1}$ to 5Y | " | " | " | " | " | " | " |
| | | 130 | " | | | | | | | " | | | | | | | " | " | $\overline{E1}$ to 6Y | " | " | " | " | " | " | " |
| | | 131 | GND | GND | OUT | GND | OUT | GND | OUT | " | OUT | GND | OUT | GND | OUT | GND | IN | " | $\overline{E2}$ to 1Y | " | " | " | " | " | " | " |
| | | 132 | " | | | | | | | " | | | | | | | " | " | $\overline{E2}$ to 2Y | " | " | " | " | " | " | " |
| | | 133 | " | | | | | | | " | | | | | | | " | " | $\overline{E2}$ to 3Y | " | " | " | " | " | " | " |
| | | 134 | " | | | | | | | " | | | | | | | " | " | $\overline{E2}$ to 4Y | " | " | " | " | " | " | " |
| | | 135 | " | | | | | | | " | | | | | | | " | " | $\overline{E2}$ to 5Y | " | " | " | " | " | " | " |
| | | 136 | " | | | | | | | " | | | | | | | " | " | $\overline{E2}$ to 6Y | " | " | " | " | " | " | " |
| $t_{PHZ}$ | 3003 (Fig. 3) | 137 | IN | 4.5V | OUT | 4.5V | OUT | 4.5V | OUT | " | OUT | 4.5V | OUT | 4.5V | OUT | 4.5V | GND | " | $\overline{E1}$ to 1Y | " | " | " | " | " | " | " |
| | | 138 | " | | | | | | | " | | | | | | | " | " | $\overline{E1}$ to 2Y | " | " | " | " | " | " | " |
| | | 139 | " | | | | | | | " | | | | | | | " | " | $\overline{E1}$ to 3Y | " | " | " | " | " | " | " |
| | | 140 | " | | | | | | | " | | | | | | | " | " | $\overline{E1}$ to 4Y | " | " | " | " | " | " | " |
| | | 141 | " | | | | | | | " | | | | | | | " | " | $\overline{E1}$ to 5Y | " | " | " | " | " | " | " |
| | | 142 | " | | | | | | | " | | | | | | | " | " | $\overline{E1}$ to 6Y | " | " | " | " | " | " | " |
| | | 143 | GND | 4.5V | OUT | 4.5V | OUT | 4.5V | OUT | " | OUT | 4.5V | OUT | 4.5V | OUT | 4.5V | IN | " | $\overline{E2}$ to 1Y | " | " | " | " | " | " | " |
| | | 144 | " | | | | | | | " | | | | | | | " | " | $\overline{E2}$ to 2Y | " | " | " | " | " | " | " |
| | | 145 | " | | | | | | | " | | | | | | | " | " | $\overline{E2}$ to 3Y | " | " | " | " | " | " | " |
| | | 146 | " | | | | | | | " | | | | | | | " | " | $\overline{E2}$ to 4Y | " | " | " | " | " | " | " |
| | | 147 | " | | | | | | | " | | | | | | | " | " | $\overline{E2}$ to 5Y | " | " | " | " | " | " | " |
| | | 148 | " | | | | | | | " | | | | | | | " | " | $\overline{E2}$ to 6Y | " | " | " | " | " | " | " |
| $t_{TLH}$ | 3004 (Fig. 3) | 149 | " | IN | OUT | IN | OUT | IN | OUT | " | OUT | IN | OUT | IN | OUT | IN | GND | " | 1Y | 2 | 12 | 2 | 16 | 2 | 12 | " |
| | | 150 | " | | | | | | | " | | | | | | | " | " | 2Y | " | " | " | " | " | " | " |
| | | 151 | " | | | | | | | " | | | | | | | " | " | 3Y | " | " | " | " | " | " | " |
| | | 152 | " | | | | | | | " | | | | | | | " | " | 4Y | " | " | " | " | " | " | " |
| | | 153 | " | | | | | | | " | | | | | | | " | " | 5Y | " | " | " | " | " | " | " |
| | | 154 | " | | | | | | | " | | | | | | | " | " | 6Y | " | " | " | " | " | " | " |
| $t_{THL}$ | 3004 (Fig. 3) | 155 | " | IN | OUT | IN | OUT | IN | OUT | " | OUT | IN | OUT | IN | OUT | IN | " | " | 1Y | " | " | " | " | " | " | " |
| | | 156 | " | | | | | | | " | | | | | | | " | " | 2Y | " | " | " | " | " | " | " |
| | | 157 | " | | | | | | | " | | | | | | | " | " | 3Y | " | " | " | " | " | " | " |
| | | 158 | " | | | | | | | " | | | | | | | " | " | 4Y | " | " | " | " | " | " | " |
| | | 159 | " | | | | | | | " | | | | | | | " | " | 5Y | " | " | " | " | " | " | " |
| | | 160 | " | | | | | | | " | | | | | | | " | " | 6Y | " | " | " | " | " | " | " |

See footnotes at end of table.

TABLE III. Group A inspection for device type 07.

| Symbol | MIL-STD-883 method | Case 2 | Terminal conditions 1/ 2 | 3 | 4 | 5 | 7 | 8 | 9 | 10 | 12 | 13 | 14 | 15 | 17 | 18 | 19 | 20 | Measured terminal | Subgroup 1 $T_C$ = +25°C Min | Subgroup 1 Max | Subgroup 2 $T_C$ = +125°C Min | Subgroup 2 Max | Subgroup 3 $T_C$ = -55°C Min | Subgroup 3 Max | Unit |
|---|---|---|---|---|---|---|---|---|---|---|---|---|---|---|---|---|---|---|---|---|---|---|---|---|---|---|
| | | E and F | 1 | 2 | 3 | 4 | 5 | 6 | 7 | 8 | 9 | 10 | 11 | 12 | 13 | 14 | 15 | 16 | | | | | | | | |
| | | Test no. | $\overline{E1}$ | 1A | $\overline{1Y}$ | 2A | $\overline{2Y}$ | 3A | $\overline{3Y}$ | GND | $\overline{4Y}$ | 4A | $\overline{5Y}$ | 5A | $\overline{6Y}$ | 6A | $\overline{E2}$ | $V_{CC}$ | | | | | | | | |
| $V_{IC}$ (pos) | | 1 | 1mA | | | | | | | OPEN | | | | | | | | GND | $\overline{E1}$ | 1/ | 1.5 | | | | | V |
| | | 2 | | 1mA | | | | | | " | | | | | | | | " | 1A | " | " | | | | | " |
| | | 3 | | | | 1mA | | | | " | | | | | | | | " | 2A | " | " | | | | | " |
| | | 4 | | | | | | 1mA | | " | | | | | | | | " | 3A | " | " | | | | | " |
| | | 5 | | | | | | | | " | | 1mA | | | | | | " | 4A | " | " | | | | | " |
| | | 6 | | | | | | | | " | | | | 1mA | | | | " | 5A | " | " | | | | | " |
| | | 7 | | | | | | | | " | | | | | | 1mA | | " | 6A | " | " | | | | | " |
| | | 8 | | | | | | | | " | | | | | | | 1mA | " | $\overline{E2}$ | " | " | | | | | " |
| $V_{IC}$ (neg) | | 9 | -1mA | | | | | | | GND | | | | | | | | OPEN | $\overline{E1}$ | | -1.5 | | | | | " |
| | | 10 | | -1mA | | | | | | " | | | | | | | | " | 1A | | " | | | | | " |
| | | 11 | | | | -1mA | | | | " | | | | | | | | " | 2A | | " | | | | | " |
| | | 12 | | | | | | -1mA | | " | | | | | | | | " | 3A | | " | | | | | " |
| | | 13 | | | | | | | | " | | -1mA | | | | | | " | 4A | | " | | | | | " |
| | | 14 | | | | | | | | " | | | | -1mA | | | | " | 5A | | " | | | | | " |
| | | 15 | | | | | | | | " | | | | | | -1mA | | " | 6A | | " | | | | | " |
| | | 16 | | | | | | | | " | | | | | | | -1mA | " | $\overline{E2}$ | | " | | | | | " |
| $I_{CC}$ | 3005 | 17 | GND | GND | | GND | | GND | | " | | GND | | GND | | GND | GND | 6V | $V_{CC}$ | | 0.2 | | 20 | | | µA |
| $I_{CC}$ | 3005 | 18 | GND | 6V | | 6V | | 6V | | " | | 6V | | 6V | | 6V | " | " | " | | 0.2 | | 20 | | | " |
| $I_{CCZ}$ | | 19 | 6V | 6V | | 6V | | 6V | | " | | GND | | GND | | GND | " | " | " | | 0.1 | | 10 | | | " |
| | | 20 | GND | GND | | GND | | GND | | " | | 6V | | 6V | | 6V | 6V | " | " | | 0.1 | | 10 | | | " |
| $V_{OH3}$ | 3006 | 21 | 1.2V | 1.2V | -20µA | | | | | " | | | | | | | 1.2V | 6V | $\overline{1Y}$ | 5.95 | | 5.95 | | 5.95 | | V |
| | | 22 | " | | | 1.2V | -20µA | | | " | | | | | | | " | " | $\overline{2Y}$ | " | | " | | " | | " |
| | | 23 | " | | | | | 1.2V | -20µA | " | | | | | | | " | " | $\overline{3Y}$ | " | | " | | " | | " |
| | | 24 | " | | | | | | | " | -20µA | 1.2V | | | | | " | " | $\overline{4Y}$ | " | | " | | " | | " |
| | | 25 | " | | | | | | | " | | | -20µA | 1.2V | | | " | " | $\overline{5Y}$ | " | | " | | " | | " |
| | | 26 | " | | | | | | | " | | | | | -20µA | 1.2V | " | " | $\overline{6Y}$ | " | | " | | " | | " |
| $V_{OH5}$ | 3006 | 27 | " | 1.2V | -7.8mA | | | | | " | | | | | | | " | " | $\overline{1Y}$ | 5.48 | | 5.2 | | 5.48 | | " |
| | | 28 | " | | | 1.2V | -7.8mA | | | " | | | | | | | " | " | $\overline{2Y}$ | " | | " | | " | | " |
| | | 29 | " | | | | | 1.2V | -7.8mA | " | | | | | | | " | " | $\overline{3Y}$ | " | | " | | " | | " |
| | | 30 | " | | | | | | | " | -7.8mA | 1.2V | | | | | " | " | $\overline{4Y}$ | " | | " | | " | | " |
| | | 31 | " | | | | | | | " | | | -7.8mA | 1.2V | | | " | " | $\overline{5Y}$ | " | | " | | " | | " |
| | | 32 | " | | | | | | | " | | | | | -7.8mA | 1.2V | " | " | $\overline{6Y}$ | " | | " | | " | | " |
| $V_{OL3}$ | 3007 | 33 | " | 4.2V | 20µA | | | | | " | | | | | | | " | " | $\overline{1Y}$ | | 0.05 | | 0.05 | | 0.05 | " |
| | | 34 | " | | | 4.2V | 20µA | | | " | | | | | | | " | " | $\overline{2Y}$ | | " | | " | | " | " |
| | | 35 | " | | | | | 4.2V | 20µA | " | | | | | | | " | " | $\overline{3Y}$ | | " | | " | | " | " |
| | | 36 | " | | | | | | | " | 20µA | 4.2V | | | | | " | " | $\overline{4Y}$ | | " | | " | | " | " |
| | | 37 | " | | | | | | | " | | | 20µA | 4.2V | | | " | " | $\overline{5Y}$ | | " | | " | | " | " |
| | | 38 | " | | | | | | | " | | | | | 20µA | 4.2V | " | " | $\overline{6Y}$ | | " | | " | | " | " |
| $V_{OL5}$ | 3007 | 39 | " | 4.2V | 7.8mA | | | | | " | | | | | | | " | " | $\overline{1Y}$ | | 0.26 | | 0.4 | | 0.26 | " |
| | | 40 | " | | | 4.2V | 7.8mA | | | " | | | | | | | " | " | $\overline{2Y}$ | | " | | " | | " | " |
| | | 41 | " | | | | | 4.2V | 7.8mA | " | | | | | | | " | " | $\overline{3Y}$ | | " | | " | | " | " |
| | | 42 | " | | | | | | | " | 7.8mA | 4.2V | | | | | " | " | $\overline{4Y}$ | | " | | " | | " | " |
| | | 43 | " | | | | | | | " | | | 7.8mA | 4.2V | | | " | " | $\overline{5Y}$ | | " | | " | | " | " |
| | | 44 | " | | | | | | | " | | | | | 7.8mA | 4.2V | " | " | $\overline{6Y}$ | | " | | " | | " | " |
| $I_{OZH}$ | | 45 | 0.8V | 9/ | 6V | | | | | " | | | | | | | 9/ | " | $\overline{1Y}$ | | 0.2 | | 2.0 | | | µA |
| | | 46 | " | | | 9/ | 6V | | | " | | | | | | | " | " | $\overline{2Y}$ | | " | | " | | | " |
| | | 47 | " | | | | | 9/ | 6V | " | | | | | | | " | " | $\overline{3Y}$ | | " | | " | | | " |
| | | 48 | " | | | | | | | " | 6V | 9/ | | | | | " | " | $\overline{4Y}$ | | " | | " | | | " |
| | | 49 | " | | | | | | | " | | | 6V | 9/ | | | " | " | $\overline{5Y}$ | | " | | " | | | " |
| | | 50 | " | | | | | | | " | | | | | 6V | 9/ | " | " | $\overline{6Y}$ | | " | | " | | | " |
| $I_{OZL}$ | | 51 | 9/ | 9/ | GND | | | | | " | | | | | | | 0.8V | " | $\overline{1Y}$ | | -0.2 | | -2.0 | | | " |
| | | 52 | " | | | 9/ | GND | | | " | | | | | | | " | " | $\overline{2Y}$ | | " | | " | | | " |
| | | 53 | " | | | | | 9/ | GND | " | | | | | | | " | " | $\overline{3Y}$ | | " | | " | | | " |
| | | 54 | " | | | | | | | " | GND | 9/ | | | | | " | " | $\overline{4Y}$ | | " | | " | | | " |
| | | 55 | " | | | | | | | " | | | GND | 9/ | | | " | " | $\overline{5Y}$ | | " | | " | | | " |
| | | 56 | " | | | | | | | " | | | | | GND | 9/ | " | " | $\overline{6Y}$ | | " | | " | | | " |

See footnotes at end of table.

TABLE III. Group A inspection for device type 07 – Continued.

| Symbol | MIL-STD-883 method | Case 2 | Terminal conditions 1/ 2 | 3 | 4 | 5 | 7 | 8 | 9 | 10 | 12 | 13 | 14 | 15 | 17 | 18 | 19 | 20 | Measured terminal | Subgroup 1 $T_C$ = +25°C Min | Subgroup 1 Max | Subgroup 2 $T_C$ = +125°C Min | Subgroup 2 Max | Subgroup 3 $T_C$ = -55°C Min | Subgroup 3 Max | Unit |
|---|---|---|---|---|---|---|---|---|---|---|---|---|---|---|---|---|---|---|---|---|---|---|---|---|---|---|
| | | E and F | 1 | 2 | 3 | 4 | 5 | 6 | 7 | 8 | 9 | 10 | 11 | 12 | 13 | 14 | 15 | 16 | | | | | | | | |
| | | Test no. | $\overline{E1}$ | 1A | $\overline{1Y}$ | 2A | $\overline{2Y}$ | 3A | $\overline{3Y}$ | GND | $\overline{4Y}$ | 4A | $\overline{5Y}$ | 5A | $\overline{6Y}$ | 6A | $\overline{E2}$ | $V_{CC}$ | | | | | | | | |
| $I_{IH}$ | 3010 | 57 | 6V | GND | | GND | | GND | | GND | | GND | | GND | | GND | GND | 6V | $\overline{E1}$ | | .05 | | 0.1 | | | µA |
| | | 58 | GND | 6V | | GND | | " | | " | | " | | " | | " | " | " | 1A | | " | | " | | | " |
| | | 59 | " | GND | | 6V | | " | | " | | " | | " | | " | " | " | 2A | | " | | " | | | " |
| | | 60 | " | " | | GND | | 6V | | " | | " | | " | | " | " | " | 3A | | " | | " | | | " |
| | | 61 | " | " | | " | | GND | | " | | 6V | | " | | " | " | " | 4A | | " | | " | | | " |
| | | 62 | " | " | | " | | " | | " | | GND | | 6V | | " | " | " | 5A | | " | | " | | | " |
| | | 63 | " | " | | " | | " | | " | | " | | GND | | 6V | " | " | 6A | | " | | " | | | " |
| | | 64 | " | " | | " | | " | | " | | " | | " | | GND | 6V | " | $\overline{E2}$ | | " | | " | | | " |
| $I_{IL}$ | 3009 | 65 | " | 6V | | 6V | | 6V | | " | | 6V | | 6V | | 6V | " | " | $\overline{E1}$ | | -.05 | | -0.1 | | | " |
| | | 66 | 6V | GND | | 6V | | " | | " | | " | | " | | " | " | " | 1A | | " | | " | | | " |
| | | 67 | " | 6V | | GND | | " | | " | | " | | " | | " | " | " | 2A | | " | | " | | | " |
| | | 68 | " | " | | 6V | | GND | | " | | " | | " | | " | " | " | 3A | | " | | " | | | " |
| | | 69 | " | " | | " | | 6V | | " | | GND | | " | | " | " | " | 4A | | " | | " | | | " |
| | | 70 | " | " | | " | | " | | " | | 6V | | GND | | " | " | " | 5A | | " | | " | | | " |
| | | 71 | " | " | | " | | " | | " | | " | | 6V | | GND | " | " | 6A | | " | | " | | | " |
| | | 72 | " | " | | " | | " | | " | | " | | 6V | | 6V | GND | " | $\overline{E2}$ | | " | | " | | | " |
| $I_{OS4}$ | 3011 | 73 | GND | GND | GND | | | | | " | | | | | | | " | 4V | $\overline{1Y}$ | -10 | -135 | -10 | -135 | -10 | -135 | mA |
| | | 74 | " | | | GND | GND | | | " | | | | | | | " | " | $\overline{2Y}$ | " | " | " | " | " | " | " |
| | | 75 | " | | | | | GND | GND | " | | | | | | | " | " | $\overline{3Y}$ | " | " | " | " | " | " | " |
| | | 76 | " | | | | | | | " | GND | GND | | | | | " | " | $\overline{4Y}$ | " | " | " | " | " | " | " |
| | | 77 | " | | | | | | | " | | | GND | GND | | | " | " | $\overline{5Y}$ | " | " | " | " | " | " | " |
| | | 78 | " | | | | | | | " | | | | | GND | GND | " | " | $\overline{6Y}$ | " | " | " | " | " | " | " |
| | | | | | | | | | | | | | | | | | | | | Subgroup 4 $T_C$ = +25°C Min | Max | | | | | |
| $C_i$ | 3012 | 79 | 2/ | | | | | | | GND | | | | | | | | GND | $\overline{E1}$ | | 10 | | | | | pF |
| | | 80 | | 2/ | | | | | | " | | | | | | | | " | 1A | | " | | | | | " |
| | | 81 | | | | 2/ | | | | " | | | | | | | | " | 2A | | " | | | | | " |
| | | 82 | | | | | | 2/ | | " | | | | | | | | " | 3A | | " | | | | | " |
| | | 83 | | | | | | | | " | | 2/ | | | | | | " | 4A | | " | | | | | " |
| | | 84 | | | | | | | | " | | | | 2/ | | | | " | 5A | | " | | | | | " |
| | | 85 | | | | | | | | " | | | | | | 2/ | | " | 6A | | " | | | | | " |
| | | 86 | | | | | | | | " | | | | | | | 2/ | " | $\overline{E2}$ | | " | | | | | " |
| $C_o$ | 3012 | 87 | 6V | | 2/ | | 2/ | | 2/ | " | | | | | | | GND | 6V | $\overline{Y}$'s | | 20 | | | | | " |
| | | 88 | GND | | | | | | | " | 2/ | | 2/ | | 2/ | | 6V | 6V | $\overline{Y}$'s | | 20 | | | | | " |
| | | | | | | | | | | | | | | | | | | | | Subgroup 9 $T_C$ = +25°C Min | Max | Subgroup 10 $T_C$ = +125°C Min | Max | Subgroup 11 $T_C$ = -55°C Min | Max | |
| $t_{PHL}$ | 3003 (Fig. 3) | 89 | GND | IN | OUT | | | | | " | | | | | | | GND | 4.5V | 1A to $\overline{1Y}$ | 5 | 22 | 5 | 29 | 5 | 22 | ns |
| | | 90 | " | | | IN | OUT | | | " | | | | | | | " | " | 2A to $\overline{2Y}$ | " | " | " | " | " | " | " |
| | | 91 | " | | | | | IN | OUT | " | | | | | | | " | " | 3A to $\overline{3Y}$ | " | " | " | " | " | " | " |
| | | 92 | " | | | | | | | " | OUT | IN | | | | | " | " | 4A to $\overline{4Y}$ | " | " | " | " | " | " | " |
| | | 93 | " | | | | | | | " | | | OUT | IN | | | " | " | 5A to $\overline{5Y}$ | " | " | " | " | " | " | " |
| | | 94 | " | | | | | | | " | | | | | OUT | IN | " | " | 6A to $\overline{6Y}$ | " | " | " | " | " | " | " |
| $t_{PLH}$ | 3003 (Fig. 3) | 95 | " | IN | OUT | | | | | " | | | | | | | " | " | 1A to $\overline{1Y}$ | " | " | " | " | " | " | " |
| | | 96 | " | | | IN | OUT | | | " | | | | | | | " | " | 2A to $\overline{2Y}$ | " | " | " | " | " | " | " |
| | | 97 | " | | | | | IN | OUT | " | | | | | | | " | " | 3A to $\overline{3Y}$ | " | " | " | " | " | " | " |
| | | 98 | " | | | | | | | " | OUT | IN | | | | | " | " | 4A to $\overline{4Y}$ | " | " | " | " | " | " | " |
| | | 99 | " | | | | | | | " | | | OUT | IN | | | " | " | 5A to $\overline{5Y}$ | " | " | " | " | " | " | " |
| | | 100 | " | | | | | | | " | | | | | OUT | IN | " | " | 6A to $\overline{6Y}$ | " | " | " | " | " | " | " |
| $t_{PZH}$ | 3003 (Fig. 3) | 101 | IN | GND | OUT | | | | | " | | | | | | | " | " | $\overline{E1}$ to $\overline{1Y}$ | " | 38 | " | 51 | " | 38 | " |
| | | 102 | " | | | GND | OUT | | | " | | | | | | | " | " | $\overline{E1}$ to $\overline{2Y}$ | " | " | " | " | " | " | " |
| | | 103 | " | | | | | GND | OUT | " | | | | | | | " | " | $\overline{E1}$ to $\overline{3Y}$ | " | " | " | " | " | " | " |
| | | 104 | " | | | | | | | " | OUT | GND | | | | | " | " | $\overline{E1}$ to $\overline{4Y}$ | " | " | " | " | " | " | " |
| | | 105 | " | | | | | | | " | | | OUT | GND | | | " | " | $\overline{E1}$ to $\overline{5Y}$ | " | " | " | " | " | " | " |
| | | 106 | " | | | | | | | " | | | | | OUT | GND | " | " | $\overline{E1}$ to $\overline{6Y}$ | " | " | " | " | " | " | " |
| | | 107 | GND | GND | OUT | | | | | " | | | | | | | IN | " | $\overline{E2}$ to $\overline{1Y}$ | " | " | " | " | " | " | " |
| | | 108 | " | | | GND | OUT | | | " | | | | | | | " | " | $\overline{E2}$ to $\overline{2Y}$ | " | " | " | " | " | " | " |
| | | 109 | " | | | | | GND | OUT | " | | | | | | | " | " | $\overline{E2}$ to $\overline{3Y}$ | " | " | " | " | " | " | " |
| | | 110 | " | | | | | | | " | OUT | GND | | | | | " | " | $\overline{E2}$ to $\overline{4Y}$ | " | " | " | " | " | " | " |
| | | 111 | " | | | | | | | " | | | OUT | GND | | | " | " | $\overline{E2}$ to $\overline{5Y}$ | " | " | " | " | " | " | " |
| | | 112 | " | | | | | | | " | | | | | OUT | GND | " | " | $\overline{E2}$ to $\overline{6Y}$ | " | " | " | " | " | " | " |

See footnotes at end of table.

TABLE III. Group A inspection for device type 07 – Continued.

| Symbol | MIL-STD-883 method | Case 2 | Terminal conditions 1/ 2 | 3 | 4 | 5 | 7 | 8 | 9 | 10 | 12 | 13 | 14 | 15 | 17 | 18 | 19 | 20 | Measured terminal | Subgroup 9 $T_C$ = +25°C | | Subgroup 10 $T_C$ = +125°C | | Subgroup 11 $T_C$ = -55°C | | Unit |
|---|---|---|---|---|---|---|---|---|---|---|---|---|---|---|---|---|---|---|---|---|---|---|---|---|---|---|
| | | E and F | 1 | 2 | 3 | 4 | 5 | 6 | 7 | 8 | 9 | 10 | 11 | 12 | 13 | 14 | 15 | 16 | | | | | | | | |
| | | Test no. | $\overline{E1}$ | 1A | $\overline{1Y}$ | 2A | $\overline{2Y}$ | 3A | $\overline{3Y}$ | GND | $\overline{4Y}$ | 4A | $\overline{5Y}$ | 5A | $\overline{6Y}$ | 6A | $\overline{E2}$ | $V_{CC}$ | | Min | Max | Min | Max | Min | Max | |
| $t_{PZL}$ | 3003 (Fig. 3) | 113 | IN | 4.5V | OUT | | | | | GND | | | | | | | GND | 4.5V | $\overline{E1}$ to $\overline{1Y}$ | 5 | 38 | 5 | 51 | 5 | 38 | ns |
| | | 114 | " | | | 4.5V | OUT | | | " | | | | | | | " | " | $\overline{E1}$ to $\overline{2Y}$ | " | " | " | " | " | " | " |
| | | 115 | " | | | | | 4.5V | OUT | " | | | | | | | " | " | $\overline{E1}$ to $\overline{3Y}$ | " | " | " | " | " | " | " |
| | | 116 | " | | | | | | | " | OUT | 4.5V | | | | | " | " | $\overline{E1}$ to $\overline{4Y}$ | " | " | " | " | " | " | " |
| | | 117 | " | | | | | | | " | | | OUT | 4.5V | | | " | " | $\overline{E1}$ to $\overline{5Y}$ | " | " | " | " | " | " | " |
| | | 118 | " | | | | | | | " | | | | | OUT | 4.5V | " | " | $\overline{E1}$ to $\overline{6Y}$ | " | " | " | " | " | " | " |
| | | 119 | GND | 4.5V | OUT | | | | | " | | | | | | | IN | " | $\overline{E2}$ to $\overline{1Y}$ | " | " | " | " | " | " | " |
| | | 120 | " | | | 4.5V | OUT | | | " | | | | | | | " | " | $\overline{E2}$ to $\overline{2Y}$ | " | " | " | " | " | " | " |
| | | 121 | " | | | | | 4.5V | OUT | " | | | | | | | " | " | $\overline{E2}$ to $\overline{3Y}$ | " | " | " | " | " | " | " |
| | | 122 | " | | | | | | | " | OUT | 4.5V | | | | | " | " | $\overline{E2}$ to $\overline{4Y}$ | " | " | " | " | " | " | " |
| | | 123 | " | | | | | | | " | | | OUT | 4.5V | | | " | " | $\overline{E2}$ to $\overline{5Y}$ | " | " | " | " | " | " | " |
| | | 124 | " | | | | | | | " | | | | | OUT | 4.5V | " | " | $\overline{E2}$ to $\overline{6Y}$ | " | " | " | " | " | " | " |
| $t_{PLZ}$ | 3003 (Fig. 3) | 125 | IN | 4.5V | OUT | | | | | " | | | | | | | GND | " | $\overline{E1}$ to $\overline{1Y}$ | " | " | " | " | " | " | " |
| | | 126 | " | | | 4.5V | OUT | | | " | | | | | | | " | " | $\overline{E1}$ to $\overline{2Y}$ | " | " | " | " | " | " | " |
| | | 127 | " | | | | | 4.5V | OUT | " | | | | | | | " | " | $\overline{E1}$ to $\overline{3Y}$ | " | " | " | " | " | " | " |
| | | 128 | " | | | | | | | " | OUT | 4.5V | | | | | " | " | $\overline{E1}$ to $\overline{4Y}$ | " | " | " | " | " | " | " |
| | | 129 | " | | | | | | | " | | | OUT | 4.5V | | | " | " | $\overline{E1}$ to $\overline{5Y}$ | " | " | " | " | " | " | " |
| | | 130 | " | | | | | | | " | | | | | OUT | 4.5V | " | " | $\overline{E1}$ to $\overline{6Y}$ | " | " | " | " | " | " | " |
| | | 131 | GND | 4.5V | OUT | | | | | " | | | | | | | IN | " | $\overline{E2}$ to $\overline{1Y}$ | " | " | " | " | " | " | " |
| | | 132 | " | | | 4.5V | OUT | | | " | | | | | | | " | " | $\overline{E2}$ to $\overline{2Y}$ | " | " | " | " | " | " | " |
| | | 133 | " | | | | | 4.5V | OUT | " | | | | | | | " | " | $\overline{E2}$ to $\overline{3Y}$ | " | " | " | " | " | " | " |
| | | 134 | " | | | | | | | " | OUT | 4.5V | | | | | " | " | $\overline{E2}$ to $\overline{4Y}$ | " | " | " | " | " | " | " |
| | | 135 | " | | | | | | | " | | | OUT | 4.5V | | | " | " | $\overline{E2}$ to $\overline{5Y}$ | " | " | " | " | " | " | " |
| | | 136 | " | | | | | | | " | | | | | OUT | 4.5V | " | " | $\overline{E2}$ to $\overline{6Y}$ | " | " | " | " | " | " | " |
| $t_{PHZ}$ | 3003 (Fig. 3) | 137 | IN | GND | OUT | | | | | " | | | | | | | GND | " | $\overline{E1}$ to $\overline{1Y}$ | " | " | " | " | " | " | " |
| | | 138 | " | | | GND | OUT | | | " | | | | | | | " | " | $\overline{E1}$ to $\overline{2Y}$ | " | " | " | " | " | " | " |
| | | 139 | " | | | | | GND | OUT | " | | | | | | | " | " | $\overline{E1}$ to $\overline{3Y}$ | " | " | " | " | " | " | " |
| | | 140 | " | | | | | | | " | OUT | GND | | | | | " | " | $\overline{E1}$ to $\overline{4Y}$ | " | " | " | " | " | " | " |
| | | 141 | " | | | | | | | " | | | OUT | GND | | | " | " | $\overline{E1}$ to $\overline{5Y}$ | " | " | " | " | " | " | " |
| | | 142 | " | | | | | | | " | | | | | OUT | GND | " | " | $\overline{E1}$ to $\overline{6Y}$ | " | " | " | " | " | " | " |
| | | 143 | GND | GND | OUT | | | | | " | | | | | | | IN | " | $\overline{E2}$ to $\overline{1Y}$ | " | " | " | " | " | " | " |
| | | 144 | " | | | GND | OUT | | | " | | | | | | | " | " | $\overline{E2}$ to $\overline{2Y}$ | " | " | " | " | " | " | " |
| | | 145 | " | | | | | GND | OUT | " | | | | | | | " | " | $\overline{E2}$ to $\overline{3Y}$ | " | " | " | " | " | " | " |
| | | 146 | " | | | | | | | " | OUT | GND | | | | | " | " | $\overline{E2}$ to $\overline{4Y}$ | " | " | " | " | " | " | " |
| | | 147 | " | | | | | | | " | | | OUT | GND | | | " | " | $\overline{E2}$ to $\overline{5Y}$ | " | " | " | " | " | " | " |
| | | 148 | " | | | | | | | " | | | | | OUT | GND | " | " | $\overline{E2}$ to $\overline{6Y}$ | " | " | " | " | " | " | " |
| $t_{TLH}$ | 3004 (Fig. 3) | 149 | " | IN | OUT | | | | | " | | | | | | | GND | " | $\overline{1Y}$ | 2 | 12 | 2 | 16 | 2 | 12 | " |
| | | 150 | " | | | IN | OUT | | | " | | | | | | | " | " | $\overline{2Y}$ | " | " | " | " | " | " | " |
| | | 151 | " | | | | | IN | OUT | " | | | | | | | " | " | $\overline{3Y}$ | " | " | " | " | " | " | " |
| | | 152 | " | | | | | | | " | OUT | IN | | | | | " | " | $\overline{4Y}$ | " | " | " | " | " | " | " |
| | | 153 | " | | | | | | | " | | | OUT | IN | | | " | " | $\overline{5Y}$ | " | " | " | " | " | " | " |
| | | 154 | " | | | | | | | " | | | | | OUT | IN | " | " | 6Y | " | " | " | " | " | " | " |
| $t_{THL}$ | 3004 (Fig. 3) | 155 | " | IN | OUT | | | | | " | | | | | | | " | " | $\overline{1Y}$ | " | " | " | " | " | " | " |
| | | 156 | " | | | IN | OUT | | | " | | | | | | | " | " | $\overline{2Y}$ | " | " | " | " | " | " | " |
| | | 157 | " | | | | | IN | OUT | " | | | | | | | " | " | $\overline{3Y}$ | " | " | " | " | " | " | " |
| | | 158 | " | | | | | | | " | OUT | IN | | | | | " | " | $\overline{4Y}$ | " | " | " | " | " | " | " |
| | | 159 | " | | | | | | | " | | | OUT | IN | | | " | " | $\overline{5Y}$ | " | " | " | " | " | " | " |
| | | 160 | " | | | | | | | " | | | | | OUT | IN | " | " | 6Y | " | " | " | " | " | " | " |

See footnotes at end of table.

TABLE III. Group A inspection for device type 08.

| Symbol | MIL-STD-883 method | Case 2 | Terminal conditions 1/ 2 | 3 | 4 | 5 | 7 | 8 | 9 | 10 | 12 | 13 | 14 | 15 | 17 | 18 | 19 | 20 | Measured terminal | Subgroup 1 $T_C$ = +25°C Min | Subgroup 1 Max | Subgroup 2 $T_C$ = +125°C Min | Subgroup 2 Max | Subgroup 3 $T_C$ = -55°C Min | Subgroup 3 Max | Unit |
|---|---|---|---|---|---|---|---|---|---|---|---|---|---|---|---|---|---|---|---|---|---|---|---|---|---|---|
| | | E and F | 1 | 2 | 3 | 4 | 5 | 6 | 7 | 8 | 9 | 10 | 11 | 12 | 13 | 14 | 15 | 16 | | | | | | | | |
| | | Test no. | $\overline{E1}$ | 1A | 1Y | 2A | 2Y | 3A | 3Y | GND | 4Y | 4A | 5Y | 5A | 6Y | 6A | $\overline{E2}$ | $V_{CC}$ | | | | | | | | |
| $V_{IC}$ (pos) | | 1 | 1mA | | | | | | | OPEN | | | | | | | | GND | $\overline{E1}$ | 1/ | 1.5 | | | | | V |
| | | 2 | " | 1mA | | | | | | " | | | | | | | | " | 1A | " | " | | | | | " |
| | | 3 | | | | 1mA | | | | " | | | | | | | | " | 2A | " | " | | | | | " |
| | | 4 | | | | | | 1mA | | " | | | | | | | | " | 3A | " | " | | | | | " |
| | | 5 | | | | | | | | " | | 1mA | | | | | | " | 4A | " | " | | | | | " |
| | | 6 | | | | | | | | " | | | | 1mA | | | | " | 5A | " | " | | | | | " |
| | | 7 | | | | | | | | " | | | | | | 1mA | | " | 6A | " | " | | | | | " |
| | | 8 | | | | | | | | " | | | | | | | 1mA | " | E2 | " | " | | | | | " |
| $V_{IC}$ (neg) | | 9 | -1mA | | | | | | | GND | | | | | | | | OPEN | $\overline{E1}$ | | -1.5 | | | | | " |
| | | 10 | | -1mA | | | | | | " | | | | | | | | " | 1A | | " | | | | | " |
| | | 11 | | | | -1mA | | | | " | | | | | | | | " | 2A | | " | | | | | " |
| | | 12 | | | | | | -1mA | | " | | | | | | | | " | 3A | | " | | | | | " |
| | | 13 | | | | | | | | " | | -1mA | | | | | | " | 4A | | " | | | | | " |
| | | 14 | | | | | | | | " | | | | -1mA | | | | " | 5A | | " | | | | | " |
| | | 15 | | | | | | | | " | | | | | | -1mA | | " | 6A | | " | | | | | " |
| | | 16 | | | | | | | | " | | | | | | | -1mA | " | E2 | | " | | | | | " |
| $I_{CC}$ | 3005 | 17 | GND | GND | | GND | | GND | | " | | GND | | GND | | GND | GND | 6V | $V_{CC}$ | | 0.2 | | 20 | | | µA |
| $I_{CC}$ | 3005 | 18 | GND | 6V | | 6V | | 6V | | " | | 6V | | 6V | | 6V | " | " | " | | 0.2 | | 20 | | | " |
| $I_{CCZ}$ | | 19 | 6V | 6V | | 6V | | 6V | | " | | 6V | | GND | | GND | " | " | " | | 0.1 | | 10 | | | " |
| | | 20 | GND | GND | | GND | | GND | | " | | GND | | 6V | | 6V | 6V | " | " | | 0.1 | | 10 | | | " |
| $V_{OH3}$ | 3006 | 21 | 1.2V | 4.2V | -20µA | | | | | " | | | | | | | | 6V | 1Y | 5.95 | | 5.95 | | 5.95 | | V |
| | | 22 | " | | | 4.2V | -20µA | | | " | | | | | | | | " | 2Y | " | | " | | " | | " |
| | | 23 | " | | | | | 4.2V | -20µA | " | | | | | | | | " | 3Y | " | | " | | " | | " |
| | | 24 | " | | | | | | | " | -20µA | 4.2V | | | | | | " | 4Y | " | | " | | " | | " |
| | | 25 | | | | | | | | " | | | -20µA | 4.2V | | | 1.2V | " | 5Y | " | | " | | " | | " |
| | | 26 | | | | | | | | " | | | | | -20µA | 4.2V | 1.2V | " | 6Y | " | | " | | " | | " |
| $V_{OH5}$ | 3006 | 27 | 1.2V | 4.2V | -7.8mA | | | | | " | | | | | | | | " | 1Y | 5.48 | | 5.2 | | 5.48 | | " |
| | | 28 | " | | | 4.2V | -7.8mA | | | " | | | | | | | | " | 2Y | " | | " | | " | | " |
| | | 29 | " | | | | | 4.2V | -7.8mA | " | | | | | | | | " | 3Y | " | | " | | " | | " |
| | | 30 | " | | | | | | | " | -7.8mA | 4.2V | | | | | | " | 4Y | " | | " | | " | | " |
| | | 31 | | | | | | | | " | | | -7.8mA | 4.2V | | | 1.2V | " | 5Y | " | | " | | " | | " |
| | | 32 | | | | | | | | " | | | | | -7.8mA | 4.2V | 1.2V | " | 6Y | " | | " | | " | | " |
| $V_{OL3}$ | 3007 | 33 | 1.2V | 1.2V | 20µA | | | | | " | | | | | | | | " | 1Y | | 0.05 | | 0.05 | | 0.05 | " |
| | | 34 | " | | | 1.2V | 20µA | | | " | | | | | | | | " | 2Y | | " | | " | | " | " |
| | | 35 | " | | | | | 1.2V | 20µA | " | | | | | | | | " | 3Y | | " | | " | | " | " |
| | | 36 | " | | | | | | | " | 20µA | 1.2V | | | | | | " | 4Y | | " | | " | | " | " |
| | | 37 | | | | | | | | " | | | 20µA | 1.2V | | | 1.2V | " | 5Y | | " | | " | | " | " |
| | | 38 | | | | | | | | " | | | | | 20µA | 1.2V | 1.2V | " | 6Y | | " | | " | | " | " |
| $V_{OL5}$ | 3007 | 39 | 1.2V | 1.2V | 7.8mA | | | | | " | | | | | | | | " | 1Y | | 0.26 | | 0.4 | | 0.26 | " |
| | | 40 | " | | | 1.2V | 7.8mA | | | " | | | | | | | | " | 2Y | | " | | " | | " | " |
| | | 41 | " | | | | | 1.2V | 7.8mA | " | | | | | | | | " | 3Y | | " | | " | | " | " |
| | | 42 | " | | | | | | | " | 7.8mA | 1.2V | | | | | | " | 4Y | | " | | " | | " | " |
| | | 43 | | | | | | | | " | | | 7.8mA | 1.2V | | | 1.2V | " | 5Y | | " | | " | | " | " |
| | | 44 | | | | | | | | " | | | | | 7.8mA | 1.2V | 1.2V | " | 6Y | | " | | " | | " | " |
| $I_{OZH}$ | | 45 | 9/ | 9/ | 6V | | | | | " | | | | | | | | " | 1Y | | 0.2 | | 2.0 | | | µA |
| | | 46 | " | | | 9/ | 6V | | | " | | | | | | | | " | 2Y | | " | | " | | | " |
| | | 47 | " | | | | | 9/ | 6V | " | | | | | | | | " | 3Y | | " | | " | | | " |
| | | 48 | " | | | | | | | " | 6V | 9/ | | | | | | " | 4Y | | " | | " | | | " |
| | | 49 | | | | | | | | " | | | 6V | 9/ | | | 9/ | " | 5Y | | " | | " | | | " |
| | | 50 | | | | | | | | " | | | | | 6V | 9/ | 9/ | " | 6Y | | " | | " | | | " |
| $I_{OZL}$ | | 51 | 9/ | 9/ | GND | | | | | " | | | | | | | | " | 1Y | | -0.2 | | -2.0 | | | " |
| | | 52 | " | | | 9/ | GND | | | " | | | | | | | | " | 2Y | | " | | " | | | " |
| | | 53 | " | | | | | 9/ | GND | " | | | | | | | | " | 3Y | | " | | " | | | " |
| | | 54 | " | | | | | | | " | GND | 9/ | | | | | | " | 4Y | | " | | " | | | " |
| | | 55 | | | | | | | | " | | | GND | 9/ | | | 9/ | " | 5Y | | " | | " | | | " |
| | | 56 | | | | | | | | " | | | | | GND | 9/ | 9/ | " | 6Y | | " | | " | | | " |

See footnotes at end of table.

TABLE III. Group A inspection for device type 08 – Continued.

| Symbol | MIL-STD-883 method | Case 2 | Terminal conditions 1/ 2 | 3 | 4 | 5 | 7 | 8 | 9 | 10 | 12 | 13 | 14 | 15 | 17 | 18 | 19 | 20 | Measured terminal | Subgroup 1 $T_C$ = +25°C Min | Subgroup 1 Max | Subgroup 2 $T_C$ = +125°C Min | Subgroup 2 Max | Subgroup 3 $T_C$ = -55°C Min | Subgroup 3 Max | Unit |
|---|---|---|---|---|---|---|---|---|---|---|---|---|---|---|---|---|---|---|---|---|---|---|---|---|---|---|
| | | E and F | 1 | 2 | 3 | 4 | 5 | 6 | 7 | 8 | 9 | 10 | 11 | 12 | 13 | 14 | 15 | 16 | | | | | | | | |
| | | Test no. | $\overline{E1}$ | 1A | 1Y | 2A | 2Y | 3A | 3Y | GND | 4Y | 4A | 5Y | 5A | 6Y | 6A | $\overline{E2}$ | $V_{CC}$ | | | | | | | | |
| $I_{IH}$ | 3010 | 57 | 6V | GND | | GND | | GND | | GND | | GND | | GND | | GND | GND | 6V | $\overline{E1}$ | | .05 | | 0.1 | | | µA |
| | | 58 | GND | 6V | | GND | | " | | " | | " | | " | | " | " | " | 1A | | " | | " | | | " |
| | | 59 | " | GND | | 6V | | " | | " | | " | | " | | " | " | " | 2A | | " | | " | | | " |
| | | 60 | " | " | | GND | | 6V | | " | | " | | " | | " | " | " | 3A | | " | | " | | | " |
| | | 61 | " | " | | " | | GND | | " | | 6V | | " | | " | " | " | 4A | | " | | " | | | " |
| | | 62 | " | " | | " | | " | | " | | GND | | 6V | | " | " | " | 5A | | " | | " | | | " |
| | | 63 | " | " | | " | | " | | " | | " | | GND | | 6V | " | " | 6A | | " | | " | | | " |
| | | 64 | " | " | | " | | " | | " | | " | | GND | | GND | 6V | " | $\overline{E2}$ | | " | | " | | | " |
| $I_{IL}$ | 3009 | 65 | " | 6V | | 6V | | 6V | | " | | 6V | | 6V | | 6V | " | " | $\overline{E1}$ | | -.05 | | -0.1 | | | " |
| | | 66 | 6V | GND | | 6V | | " | | " | | " | | " | | " | " | " | 1A | | " | | " | | | " |
| | | 67 | " | 6V | | GND | | " | | " | | " | | " | | " | " | " | 2A | | " | | " | | | " |
| | | 68 | " | " | | 6V | | GND | | " | | " | | " | | " | " | " | 3A | | " | | " | | | " |
| | | 69 | " | " | | " | | 6V | | " | | GND | | " | | " | " | " | 4A | | " | | " | | | " |
| | | 70 | " | " | | " | | " | | " | | 6V | | GND | | " | " | " | 5A | | " | | " | | | " |
| | | 71 | " | " | | " | | " | | " | | " | | 6V | | GND | " | " | 6A | | " | | " | | | " |
| | | 72 | " | " | | " | | " | | " | | " | | 6V | | 6V | GND | " | $\overline{E2}$ | | " | | " | | | " |
| $I_{OS4}$ | 3011 | 73 | GND | 4V | GND | | | | | " | | | | | | | | 4V | 1Y | -10 | -135 | -10 | -135 | -10 | -135 | mA |
| | | 74 | " | | | 4V | GND | | | " | | | | | | | | " | 2Y | " | " | " | " | " | " | " |
| | | 75 | " | | | | | 4V | GND | " | | | | | | | | " | 3Y | " | " | " | " | " | " | " |
| | | 76 | " | | | | | | | " | GND | 4V | | | | | | " | 4Y | " | " | " | " | " | " | " |
| | | 77 | | | | | | | | " | | | GND | 4V | | | GND | " | 5Y | " | " | " | " | " | " | " |
| | | 78 | | | | | | | | " | | | | | GND | 4V | GND | " | 6Y | " | " | " | " | " | " | " |
| | | | | | | | | | | | | | | | | | | | | Subgroup 4 $T_C$ = +25°C Min | Max | | | | | |
| $C_i$ | 3012 | 79 | 2/ | | | | | | | GND | | | | | | | | GND | $\overline{E1}$ | | 10 | | | | | pF |
| | | 80 | | 2/ | | | | | | " | | | | | | | | " | 1A | | " | | | | | " |
| | | 81 | | | | 2/ | | | | " | | | | | | | | " | 2A | | " | | | | | " |
| | | 82 | | | | | | 2/ | | " | | | | | | | | " | 3A | | " | | | | | " |
| | | 83 | | | | | | | | " | | 2/ | | | | | | " | 4A | | " | | | | | " |
| | | 84 | | | | | | | | " | | | | 2/ | | | | " | 5A | | " | | | | | " |
| | | 85 | | | | | | | | " | | | | | | 2/ | | " | 6A | | " | | | | | " |
| | | 86 | | | | | | | | " | | | | | | | 2/ | " | $\overline{E2}$ | | " | | | | | " |
| $C_o$ | 3012 | 87 | 6V | | 2/ | | 2/ | | 2/ | GND | 2/ | | | | | | GND | 6V | Y's | | 20 | | | | | pF |
| | | 88 | GND | | | | | | | GND | | | 2/ | | 2/ | | 6V | 6V | Y's | | 20 | | | | | pF |
| | | | | | | | | | | | | | | | | | | | | Subgroup 9 $T_C$ = +25°C Min | Max | Subgroup 10 $T_C$ = +125°C Min | Max | Subgroup 11 $T_C$ = -55°C Min | Max | |
| $t_{PHL}$ | 3003 (Fig. 3) | 89 | GND | IN | OUT | | | | | " | | | | | | | | 4.5V | 1A to 1Y | 5 | 21 | 5 | 28 | 5 | 21 | ns |
| | | 90 | " | | | IN | OUT | | | " | | | | | | | | " | 2A to 2Y | " | " | " | " | " | " | " |
| | | 91 | " | | | | | IN | OUT | " | | | | | | | | " | 3A to 3Y | " | " | " | " | " | " | " |
| | | 92 | " | | | | | | | " | OUT | IN | | | | | | " | 4A to 4Y | " | " | " | " | " | " | " |
| | | 93 | | | | | | | | " | | | OUT | IN | | | GND | " | 5A to 5Y | " | " | " | " | " | " | " |
| | | 94 | | | | | | | | " | | | | | OUT | IN | GND | " | 6A to 6Y | " | " | " | " | " | " | " |
| $t_{PLH}$ | 3003 (Fig. 3) | 95 | GND | IN | OUT | | | | | " | | | | | | | | " | 1A to 1Y | " | " | " | " | " | " | " |
| | | 96 | " | | | IN | OUT | | | " | | | | | | | | " | 2A to 2Y | " | " | " | " | " | " | " |
| | | 97 | " | | | | | IN | OUT | " | | | | | | | | " | 3A to 3Y | " | " | " | " | " | " | " |
| | | 98 | " | | | | | | | " | OUT | IN | | | | | | " | 4A to 4Y | " | " | " | " | " | " | " |
| | | 99 | | | | | | | | " | | | OUT | IN | | | GND | " | 5A to 5Y | " | " | " | " | " | " | " |
| | | 100 | | | | | | | | " | | | | | OUT | IN | GND | " | 6A to 6Y | " | " | " | " | " | " | " |
| $t_{PZL}$ | 3003 (Fig. 3) | 101 | IN | GND | OUT | | | | | " | | | | | | | | " | $\overline{E1}$ to 1Y | " | 33 | " | 44 | " | 33 | " |
| | | 102 | " | | | GND | OUT | | | " | | | | | | | | " | $\overline{E1}$ to 2Y | " | " | " | " | " | " | " |
| | | 103 | " | | | | | GND | OUT | " | | | | | | | | " | $\overline{E1}$ to 3Y | " | " | " | " | " | " | " |
| | | 104 | " | | | | | | | " | OUT | GND | | | | | | " | $\overline{E1}$ to 4Y | " | " | " | " | " | " | " |
| | | 105 | | | | | | | | " | | | OUT | GND | | | IN | " | $\overline{E2}$ to 5Y | " | " | " | " | " | " | " |
| | | 106 | | | | | | | | " | | | | | OUT | GND | IN | " | $\overline{E2}$ to 6Y | " | " | " | " | " | " | " |
| $t_{PZH}$ | 3003 (Fig. 3) | 107 | IN | 4.5V | OUT | | | | | " | | | | | | | | " | $\overline{E1}$ to 1Y | " | " | " | " | " | " | " |
| | | 108 | " | | | 4.5V | OUT | | | " | | | | | | | | " | $\overline{E1}$ to 2Y | " | " | " | " | " | " | " |
| | | 109 | " | | | | | 4.5V | OUT | " | | | | | | | | " | $\overline{E1}$ to 3Y | " | " | " | " | " | " | " |
| | | 110 | " | | | | | | | " | OUT | 4.5V | | | | | | " | $\overline{E1}$ to 4Y | " | " | " | " | " | " | " |
| | | 111 | | | | | | | | " | | | OUT | 4.5V | | | IN | " | $\overline{E2}$ to 5Y | " | " | " | " | " | " | " |
| | | 112 | | | | | | | | " | | | | | OUT | 4.5V | IN | " | $\overline{E2}$ to 6Y | " | " | " | " | " | " | " |

See footnotes at end of table

TABLE III. Group A inspection for device type 08 – Continued.

| Symbol | MIL-STD-883 method | Case 2 | Terminal conditions 1/ 2 | 3 | 4 | 5 | 7 | 8 | 9 | 10 | 12 | 13 | 14 | 15 | 17 | 18 | 19 | 20 | Measured terminal | Subgroup 9 $T_C$ = +25°C Min | Subgroup 9 Max | Subgroup 10 $T_C$ = +125°C Min | Subgroup 10 Max | Subgroup 11 $T_C$ = -55°C Min | Subgroup 11 Max | Unit |
|---|---|---|---|---|---|---|---|---|---|---|---|---|---|---|---|---|---|---|---|---|---|---|---|---|---|---|
| | | E and F | 1 | 2 | 3 | 4 | 5 | 6 | 7 | 8 | 9 | 10 | 11 | 12 | 13 | 14 | 15 | 16 | | | | | | | | |
| | | Test no. | $\overline{E1}$ | 1A | 1Y | 2A | 2Y | 3A | 3Y | GND | 4Y | 4A | 5Y | 5A | 6Y | 6A | $\overline{E2}$ | $V_{CC}$ | | | | | | | | |
| $t_{PLZ}$ | 3003 (Fig. 3) | 113 | IN | GND | OUT | | | | | GND | | | | | | | | 4.5V | $\overline{E1}$ to 1Y | 5 | 31 | 5 | 41 | 5 | 31 | ns |
| | | 114 | " | | | GND | OUT | | | " | | | | | | | | " | $\overline{E1}$ to 2Y | " | " | " | " | " | " | " |
| | | 115 | " | | | | | GND | OUT | " | | | | | | | | " | $\overline{E1}$ to 3Y | " | " | " | " | " | " | " |
| | | 116 | " | | | | | | | " | OUT | GND | | | | | | " | $\overline{E1}$ to 4Y | " | " | " | " | " | " | " |
| | | 117 | | | | | | | | " | | | OUT | GND | | | IN | " | $\overline{E2}$ to 5Y | " | " | " | " | " | " | " |
| | | 118 | | | | | | | | " | | | | | OUT | GND | IN | " | $\overline{E2}$ to 6Y | " | " | " | " | " | " | " |
| $t_{PHZ}$ | 3003 (Fig. 3) | 119 | IN | 4.5V | OUT | | | | | " | | | | | | | | " | $\overline{E1}$ to 1Y | " | " | " | " | " | " | " |
| | | 120 | " | | | 4.5V | OUT | | | " | | | | | | | | " | $\overline{E1}$ to 2Y | " | " | " | " | " | " | " |
| | | 121 | " | | | | | 4.5V | OUT | " | | | | | | | | " | $\overline{E1}$ to 3Y | " | " | " | " | " | " | " |
| | | 122 | " | | | | | | | " | OUT | 4.5V | | | | | | " | $\overline{E1}$ to 4Y | " | " | " | " | " | " | " |
| | | 123 | | | | | | | | " | | | OUT | 4.5V | | | IN | " | $\overline{E2}$ to 5Y | " | " | " | " | " | " | " |
| | | 124 | | | | | | | | " | | | | | OUT | 4.5V | IN | " | $\overline{E2}$ to 6Y | " | " | " | " | " | " | " |
| $t_{TLH}$ | 3004 (Fig. 3) | 125 | GND | IN | OUT | | | | | " | | | | | | | | " | 1Y | 2 | 12 | 2 | 16 | 2 | 12 | " |
| | | 126 | " | | | IN | OUT | | | " | | | | | | | | " | 2Y | " | " | " | " | " | " | " |
| | | 127 | " | | | | | IN | OUT | " | | | | | | | | " | 3Y | " | " | " | " | " | " | " |
| | | 128 | " | | | | | | | " | OUT | IN | | | | | | " | 4Y | " | " | " | " | " | " | " |
| | | 129 | | | | | | | | " | | | OUT | IN | | | GND | " | 5Y | " | " | " | " | " | " | " |
| | | 130 | | | | | | | | " | | | | | OUT | IN | GND | " | 6Y | " | " | " | " | " | " | " |
| $t_{THL}$ | 3004 (Fig. 3) | 131 | GND | IN | OUT | | | | | " | | | | | | | | " | 1Y | " | " | " | " | " | " | " |
| | | 132 | " | | | IN | OUT | | | " | | | | | | | | " | 2Y | " | " | " | " | " | " | " |
| | | 133 | " | | | | | IN | OUT | " | | | | | | | | " | 3Y | " | " | " | " | " | " | " |
| | | 134 | " | | | | | | | " | OUT | IN | | | | | | " | 4Y | " | " | " | " | " | " | " |
| | | 135 | | | | | | | | " | | | OUT | IN | | | GND | " | 5Y | " | " | " | " | " | " | " |
| | | 136 | | | | | | | | " | | | | | OUT | IN | GND | " | 6Y | " | " | " | " | " | " | " |

See footnotes at end of table.

TABLE III. Group A inspection for device type 09.

| Symbol | MIL-STD-883 method | Case 2 | Terminal conditions 1/ 2 | 3 | 4 | 5 | 7 | 8 | 9 | 10 | 12 | 13 | 14 | 15 | 17 | 18 | 19 | 20 | Measured terminal | Subgroup 1 $T_C$ = +25°C | | Subgroup 2 $T_C$ = +125°C | | Subgroup 3 $T_C$ = -55°C | | Unit |
|---|---|---|---|---|---|---|---|---|---|---|---|---|---|---|---|---|---|---|---|---|---|---|---|---|---|---|
| | | E and F | 1 | 2 | 3 | 4 | 5 | 6 | 7 | 8 | 9 | 10 | 11 | 12 | 13 | 14 | 15 | 16 | | | | | | | | |
| | | Test no. | $\overline{E1}$ | 1A | $\overline{1Y}$ | 2A | $\overline{2Y}$ | 3A | $\overline{3Y}$ | GND | $\overline{4Y}$ | 4A | $\overline{5Y}$ | 5A | $\overline{6Y}$ | 6A | $\overline{E2}$ | $V_{CC}$ | | Min | Max | Min | Max | Min | Max | |
| $V_{IC}$ (pos) | | 1 | 1mA | | | | | | | OPEN | | | | | | | | GND | $\overline{E1}$ | 1/ | 1.5 | | | | | V |
| | | 2 | | 1mA | | | | | | " | | | | | | | | " | 1A | " | " | | | | | " |
| | | 3 | | | | 1mA | | | | " | | | | | | | | " | 2A | " | " | | | | | " |
| | | 4 | | | | | | 1mA | | " | | | | | | | | " | 3A | " | " | | | | | " |
| | | 5 | | | | | | | | " | | 1mA | | | | | | " | 4A | " | " | | | | | " |
| | | 6 | | | | | | | | " | | | | 1mA | | | | " | 5A | " | " | | | | | " |
| | | 7 | | | | | | | | " | | | | | | 1mA | | " | 6A | " | " | | | | | " |
| | | 8 | | | | | | | | " | | | | | | | 1mA | " | $\overline{E2}$ | " | " | | | | | " |
| $V_{IC}$ (neg) | | 9 | -1mA | | | | | | | GND | | | | | | | | OPEN | $\overline{E1}$ | | -1.5 | | | | | " |
| | | 10 | | -1mA | | | | | | " | | | | | | | | " | 1A | | " | | | | | " |
| | | 11 | | | | -1mA | | | | " | | | | | | | | " | 2A | | " | | | | | " |
| | | 12 | | | | | | -1mA | | " | | | | | | | | " | 3A | | " | | | | | " |
| | | 13 | | | | | | | | " | | -1mA | | | | | | " | 4A | | " | | | | | " |
| | | 14 | | | | | | | | " | | | | -1mA | | | | " | 5A | | " | | | | | " |
| | | 15 | | | | | | | | " | | | | | | -1mA | | " | 6A | | " | | | | | " |
| | | 16 | | | | | | | | " | | | | | | | -1mA | " | $\overline{E2}$ | | " | | | | | " |
| $I_{CC}$ | 3005 | 17 | GND | GND | | GND | | GND | | " | | GND | | GND | | GND | GND | 6V | $V_{CC}$ | | 0.2 | | 20 | | | µA |
| $I_{CC}$ | 3005 | 18 | GND | 6V | | 6V | | 6V | | " | | 6V | | 6V | | 6V | GND | " | " | | 0.2 | | 20 | | | " |
| $I_{CCZ}$ | | 19 | 6V | 6V | | 6V | | 6V | | " | | 6V | | GND | | GND | GND | " | " | | 0.1 | | 10 | | | " |
| | | 20 | GND | GND | | GND | | GND | | " | | GND | | 6V | | 6V | 6V | " | " | | 0.1 | | 10 | | | " |
| $V_{OH3}$ | 3006 | 21 | 1.2V | 1.2V | -20µA | | | | | " | | | | | | | | 6V | $\overline{1Y}$ | 5.95 | | 5.95 | | 5.95 | | V |
| | | 22 | " | | | 1.2V | -20µA | | | " | | | | | | | | " | $\overline{2Y}$ | " | | " | | " | | " |
| | | 23 | " | | | | | 1.2V | -20µA | " | | | | | | | | " | $\overline{3Y}$ | " | | " | | " | | " |
| | | 24 | " | | | | | | | " | -20µA | 1.2V | | | | | | " | $\overline{4Y}$ | " | | " | | " | | " |
| | | 25 | | | | | | | | " | | | -20µA | 1.2V | | | 1.2V | " | $\overline{5Y}$ | " | | " | | " | | " |
| | | 26 | | | | | | | | " | | | | | -20µA | 1.2V | 1.2V | " | $\overline{6Y}$ | " | | " | | " | | " |
| $V_{OH5}$ | 3006 | 27 | 1.2V | 1.2V | -7.8mA | | | | | " | | | | | | | | " | $\overline{1Y}$ | 5.48 | | 5.2 | | 5.48 | | " |
| | | 28 | " | | | 1.2V | -7.8mA | | | " | | | | | | | | " | $\overline{2Y}$ | " | | " | | " | | " |
| | | 29 | " | | | | | 1.2V | -7.8mA | " | | | | | | | | " | $\overline{3Y}$ | " | | " | | " | | " |
| | | 30 | " | | | | | | | " | -7.8mA | 1.2V | | | | | | " | $\overline{4Y}$ | " | | " | | " | | " |
| | | 31 | | | | | | | | " | | | -7.8mA | 1.2V | | | 1.2V | " | $\overline{5Y}$ | " | | " | | " | | " |
| | | 32 | | | | | | | | " | | | | | -7.8mA | 1.2V | 1.2V | " | $\overline{6Y}$ | " | | " | | " | | " |
| $V_{OL3}$ | 3007 | 33 | 1.2V | 4.2V | 20µA | | | | | " | | | | | | | | " | $\overline{1Y}$ | | 0.05 | | 0.05 | | 0.05 | " |
| | | 34 | " | | | 4.2V | 20µA | | | " | | | | | | | | " | $\overline{2Y}$ | | " | | " | | " | " |
| | | 35 | " | | | | | 4.2V | 20µA | " | | | | | | | | " | $\overline{3Y}$ | | " | | " | | " | " |
| | | 36 | " | | | | | | | " | 20µA | 4.2V | | | | | | " | $\overline{4Y}$ | | " | | " | | " | " |
| | | 37 | | | | | | | | " | | | 20µA | 4.2V | | | 1.2V | " | $\overline{5Y}$ | | " | | " | | " | " |
| | | 38 | | | | | | | | " | | | | | 20µA | 4.2V | 1.2V | " | $\overline{6Y}$ | | " | | " | | " | " |
| $V_{OL5}$ | 3007 | 39 | 1.2V | 4.2V | 7.8mA | | | | | " | | | | | | | | " | $\overline{1Y}$ | | 0.26 | | 0.4 | | 0.26 | " |
| | | 40 | " | | | 4.2V | 7.8mA | | | " | | | | | | | | " | $\overline{2Y}$ | | " | | " | | " | " |
| | | 41 | " | | | | | 4.2V | 7.8mA | " | | | | | | | | " | $\overline{3Y}$ | | " | | " | | " | " |
| | | 42 | " | | | | | | | " | 7.8mA | 4.2V | | | | | | " | $\overline{4Y}$ | | " | | " | | " | " |
| | | 43 | | | | | | | | " | | | 7.8mA | 4.2V | | | 1.2V | " | $\overline{5Y}$ | | " | | " | | " | " |
| | | 44 | | | | | | | | " | | | | | 7.8mA | 4.2V | 1.2V | " | $\overline{6Y}$ | | " | | " | | " | " |
| $I_{OZH}$ | | 45 | 9/ | 9/ | 6V | | | | | " | | | | | | | | " | $\overline{1Y}$ | | 0.2 | | 2.0 | | | µA |
| | | 46 | " | | | 9/ | 6V | | | " | | | | | | | | " | $\overline{2Y}$ | | " | | " | | | " |
| | | 47 | " | | | | | 9/ | 6V | " | | | | | | | | " | $\overline{3Y}$ | | " | | " | | | " |
| | | 48 | " | | | | | | | " | 6V | 9/ | | | | | | " | $\overline{4Y}$ | | " | | " | | | " |
| | | 49 | | | | | | | | " | | | 6V | 9/ | | | 9/ | " | $\overline{5Y}$ | | " | | " | | | " |
| | | 50 | | | | | | | | " | | | | | 6V | 9/ | 9/ | " | $\overline{6Y}$ | | " | | " | | | " |
| $I_{OZL}$ | | 51 | 9/ | 9/ | GND | | | | | " | | | | | | | | " | $\overline{1Y}$ | | -0.2 | | -2.0 | | | " |
| | | 52 | " | | | 9/ | GND | | | " | | | | | | | | " | $\overline{2Y}$ | | " | | " | | | " |
| | | 53 | " | | | | | 9/ | GND | " | | | | | | | | " | $\overline{3Y}$ | | " | | " | | | " |
| | | 54 | " | | | | | | | " | GND | 9/ | | | | | | " | $\overline{4Y}$ | | " | | " | | | " |
| | | 55 | | | | | | | | " | | | GND | 9/ | | | 9/ | " | $\overline{5Y}$ | | " | | " | | | " |
| | | 56 | | | | | | | | " | | | | | GND | 9/ | 9/ | " | $\overline{6Y}$ | | " | | " | | | " |

See footnotes at end of table.

TABLE III. Group A inspection for device type 09 – Continued.

| Symbol | MIL-STD-883 method | Case 2 | Terminal conditions 1/ 2 | 3 | 4 | 5 | 7 | 8 | 9 | 10 | 12 | 13 | 14 | 15 | 17 | 18 | 19 | 20 | Measured terminal | Subgroup 1 $T_C$ = +25°C Min | Subgroup 1 Max | Subgroup 2 $T_C$ = +125°C Min | Subgroup 2 Max | Subgroup 3 $T_C$ = -55°C Min | Subgroup 3 Max | Unit |
|---|---|---|---|---|---|---|---|---|---|---|---|---|---|---|---|---|---|---|---|---|---|---|---|---|---|---|
| | | E and F | 1 | 2 | 3 | 4 | 5 | 6 | 7 | 8 | 9 | 10 | 11 | 12 | 13 | 14 | 15 | 16 | | | | | | | | |
| | | Test no. | $\overline{E1}$ | 1A | $\overline{1Y}$ | 2A | $\overline{2Y}$ | 3A | $\overline{3Y}$ | GND | $\overline{4Y}$ | 4A | $\overline{5Y}$ | 5A | $\overline{6Y}$ | 6A | $\overline{E2}$ | $V_{CC}$ | | | | | | | | |
| $I_{IH}$ | 3010 | 57 | 6V | GND | | GND | | GND | | GND | | GND | | GND | | GND | GND | 6V | $\overline{E1}$ | | .05 | | 0.1 | | | µA |
| | | 58 | GND | 6V | | GND | | " | | " | | " | | " | | " | " | " | 1A | | " | | " | | | " |
| | | 59 | " | GND | | 6V | | " | | " | | " | | " | | " | " | " | 2A | | " | | " | | | " |
| | | 60 | " | " | | GND | | 6V | | " | | " | | " | | " | " | " | 3A | | " | | " | | | " |
| | | 61 | " | " | | " | | GND | | " | | 6V | | " | | " | " | " | 4A | | " | | " | | | " |
| | | 62 | " | " | | " | | " | | " | | GND | | 6V | | " | " | " | 5A | | " | | " | | | " |
| | | 63 | " | " | | " | | " | | " | | " | | GND | | 6V | " | " | 6A | | " | | " | | | " |
| | | 64 | " | " | | " | | " | | " | | " | | GND | | GND | 6V | " | $\overline{E2}$ | | " | | " | | | " |
| $I_{IL}$ | 3009 | 65 | " | 6V | | 6V | | 6V | | " | | 6V | | 6V | | 6V | " | " | $\overline{E1}$ | | -.05 | | -0.1 | | | " |
| | | 66 | 6V | GND | | 6V | | " | | " | | " | | " | | " | " | " | 1A | | " | | " | | | " |
| | | 67 | " | 6V | | GND | | " | | " | | " | | " | | " | " | " | 2A | | " | | " | | | " |
| | | 68 | " | " | | 6V | | GND | | " | | " | | " | | " | " | " | 3A | | " | | " | | | " |
| | | 69 | " | " | | " | | 6V | | " | | GND | | " | | " | " | " | 4A | | " | | " | | | " |
| | | 70 | " | " | | " | | " | | " | | 6V | | GND | | " | " | " | 5A | | " | | " | | | " |
| | | 71 | " | " | | " | | " | | " | | " | | 6V | | GND | " | " | 6A | | " | | " | | | " |
| | | 72 | " | " | | " | | " | | " | | " | | 6V | | 6V | GND | " | $\overline{E2}$ | | " | | " | | | " |
| $I_{OS4}$ | 3011 | 73 | GND | GND | GND | GND | GND | GND | GND | " | GND | GND | GND | GND | GND | GND | GND | 4V | $\overline{1Y}$ | -10 | -135 | -10 | -135 | -10 | -135 | mA |
| | | 74 | " | | | | | | | " | | | | | | | | " | $\overline{2Y}$ | " | " | " | " | " | " | " |
| | | 75 | " | | | | | | | " | | | | | | | | " | $\overline{3Y}$ | " | " | " | " | " | " | " |
| | | 76 | " | | | | | | | " | | | | | | | | " | $\overline{4Y}$ | " | " | " | " | " | " | " |
| | | 77 | | | | | | | | " | | | | | | | | " | $\overline{5Y}$ | " | " | " | " | " | " | " |
| | | 78 | | | | | | | | " | | | | | | | | " | $\overline{6Y}$ | " | " | " | " | " | " | " |
| | | 79 | | | | | | | | | | | | | | | | | | | | | | | | |
| | | | | | | | | | | | | | | | | | | | | Subgroup 4 $T_C$ = +25°C Min | Max | | | | | |
| $C_i$ | 3012 | 80 | 2/ | | | | | | | GND | | | | | | | | GND | $\overline{E1}$ | | 10 | | | | | pF |
| | | 81 | | 2/ | | | | | | " | | | | | | | | " | 1A | | " | | | | | " |
| | | 82 | | | | 2/ | | | | " | | | | | | | | " | 2A | | " | | | | | " |
| | | 83 | | | | | | 2/ | | " | | | | | | | | " | 3A | | " | | | | | " |
| | | 84 | | | | | | | | " | | 2/ | | | | | | " | 4A | | " | | | | | " |
| | | 85 | | | | | | | | " | | | | 2/ | | | | " | 5A | | " | | | | | " |
| | | 86 | | | | | | | | " | | | | | | 2/ | | " | 6A | | " | | | | | " |
| | | 87 | | | | | | | | " | | | | | | | 2/ | " | $\overline{E2}$ | | " | | | | | " |
| $C_o$ | 3012 | 88 | 6V | | 2/ | | 2/ | | 2/ | GND | 2/ | | | | | | GND | 6V | $\overline{Y}$'s | | 20 | | | | | pF |
| | | 89 | GND | | | | | | | GND | | | 2/ | | 2/ | | 6V | 6V | $\overline{Y}$'s | | 20 | | | | | pF |
| | | | | | | | | | | | | | | | | | | | | Subgroup 9 $T_C$ = +25°C Min | Max | Subgroup 10 $T_C$ = +125°C Min | Max | Subgroup 11 $T_C$ = -55°C Min | Max | |
| $t_{PHL}$ | 3003 (Fig. 3) | 90 | GND | IN | OUT | | | | | " | | | | | | | | 4.5V | 1A to $\overline{1Y}$ | 5 | 22 | 5 | 29 | 5 | 22 | ns |
| | | 91 | " | | | IN | OUT | | | " | | | | | | | | " | 2A to $\overline{2Y}$ | " | " | " | " | " | " | " |
| | | 92 | " | | | | | IN | OUT | " | | | | | | | | " | 3A to $\overline{3Y}$ | " | " | " | " | " | " | " |
| | | 93 | " | | | | | | | " | OUT | IN | | | | | | " | 4A to $\overline{4Y}$ | " | " | " | " | " | " | " |
| | | 94 | | | | | | | | " | | | OUT | IN | | | GND | " | 5A to $\overline{5Y}$ | " | " | " | " | " | " | " |
| | | 95 | | | | | | | | " | | | | | OUT | IN | GND | " | 6A to $\overline{6Y}$ | " | " | " | " | " | " | " |
| $t_{PLH}$ | 3003 (Fig. 3) | 96 | GND | IN | OUT | | | | | " | | | | | | | | " | 1A to $\overline{1Y}$ | " | " | " | " | " | " | " |
| | | 97 | " | | | IN | OUT | | | " | | | | | | | | " | 2A to $\overline{2Y}$ | " | " | " | " | " | " | " |
| | | 98 | " | | | | | IN | OUT | " | | | | | | | | " | 3A to $\overline{3Y}$ | " | " | " | " | " | " | " |
| | | 99 | " | | | | | | | " | OUT | IN | | | | | | " | 4A to $\overline{4Y}$ | " | " | " | " | " | " | " |
| | | 100 | | | | | | | | " | | | OUT | IN | | | GND | " | 5A to $\overline{5Y}$ | " | " | " | " | " | " | " |
| | | 101 | | | | | | | | " | | | | | OUT | IN | GND | " | 6A to $\overline{6Y}$ | " | " | " | " | " | " | " |
| $t_{PZL}$ | 3003 (Fig. 3) | 102 | IN | 4.5V | OUT | | | | | " | | | | | | | | " | $\overline{E1}$ to $\overline{1Y}$ | " | 33 | " | 44 | " | 33 | " |
| | | 103 | " | | | 4.5V | OUT | | | " | | | | | | | | " | $\overline{E1}$ to $\overline{2Y}$ | " | " | " | " | " | " | " |
| | | 104 | " | | | | | 4.5V | OUT | " | | | | | | | | " | $\overline{E1}$ to $\overline{3Y}$ | " | " | " | " | " | " | " |
| | | 105 | " | | | | | | | " | OUT | 4.5V | | | | | | " | $\overline{E1}$ to $\overline{4Y}$ | " | " | " | " | " | " | " |
| | | 106 | | | | | | | | " | | | OUT | 4.5V | | | IN | " | $\overline{E2}$ to $\overline{5Y}$ | " | " | " | " | " | " | " |
| | | 107 | | | | | | | | " | | | | | OUT | 4.5V | IN | " | $\overline{E2}$ to $\overline{6Y}$ | " | " | " | " | " | " | " |
| $t_{PZH}$ | 3003 (Fig. 3) | 108 | IN | GND | OUT | | | | | " | | | | | | | | " | $\overline{E1}$ to $\overline{1Y}$ | " | " | " | " | " | " | " |
| | | 109 | " | | | GND | OUT | | | " | | | | | | | | " | $\overline{E1}$ to $\overline{2Y}$ | " | " | " | " | " | " | " |
| | | 110 | " | | | | | GND | OUT | " | | | | | | | | " | $\overline{E1}$ to $\overline{3Y}$ | " | " | " | " | " | " | " |
| | | 111 | " | | | | | | | " | OUT | GND | | | | | | " | $\overline{E1}$ to $\overline{4Y}$ | " | " | " | " | " | " | " |
| | | 112 | | | | | | | | " | | | OUT | GND | | | IN | " | $\overline{E2}$ to $\overline{5Y}$ | " | " | " | " | " | " | " |
| | | 113 | | | | | | | | " | | | | | OUT | GND | IN | " | $\overline{E2}$ to $\overline{6Y}$ | " | " | " | " | " | " | " |

See footnotes at end of table.

TABLE III. Group A inspection for device type 09 – Continued.

| Symbol | MIL-STD-883 method | Case 2 | Terminal conditions 1/ 2 | 3 | 4 | 5 | 7 | 8 | 9 | 10 | 12 | 13 | 14 | 15 | 17 | 18 | 19 | 20 | Measured terminal | Subgroup 9 $T_C$ = +25°C Min | Subgroup 9 Max | Subgroup 10 $T_C$ = +125°C Min | Subgroup 10 Max | Subgroup 11 $T_C$ = -55°C Min | Subgroup 11 Max | Unit |
|---|---|---|---|---|---|---|---|---|---|---|---|---|---|---|---|---|---|---|---|---|---|---|---|---|---|---|
| | | E and F | 1 | 2 | 3 | 4 | 5 | 6 | 7 | 8 | 9 | 10 | 11 | 12 | 13 | 14 | 15 | 16 | | | | | | | | |
| | | Test no. | $\overline{E1}$ | 1A | $\overline{1Y}$ | 2A | $\overline{2Y}$ | 3A | $\overline{3Y}$ | GND | $\overline{4Y}$ | 4A | $\overline{5Y}$ | 5A | $\overline{6Y}$ | 6A | $\overline{E2}$ | $V_{CC}$ | | | | | | | | |
| $t_{PLZ}$ | 3003 (Fig. 3) | 114 | IN | 4.5V | OUT | | | | | GND | | | | | | | | 4.5V | $\overline{E1}$ to $\overline{1Y}$ | 5 | 31 | 5 | 41 | 5 | 31 | ns |
| | | 115 | “ | | | 4.5V | OUT | | | “ | | | | | | | | “ | $\overline{E1}$ to $\overline{2Y}$ | “ | “ | “ | “ | “ | “ | “ |
| | | 116 | “ | | | | | 4.5V | OUT | “ | | | | | | | | “ | $\overline{E1}$ to $\overline{3Y}$ | “ | “ | “ | “ | “ | “ | “ |
| | | 117 | “ | | | | | | | “ | OUT | 4.5V | | | | | | “ | $\overline{E1}$ to $\overline{4Y}$ | “ | “ | “ | “ | “ | “ | “ |
| | | 118 | | | | | | | | “ | | | OUT | 4.5V | | | IN | “ | $\overline{E2}$ to $\overline{5Y}$ | “ | “ | “ | “ | “ | “ | “ |
| | | 119 | | | | | | | | “ | | | | | OUT | 4.5V | IN | “ | $\overline{E2}$ to $\overline{6Y}$ | “ | “ | “ | “ | “ | “ | “ |
| $t_{PHZ}$ | 3003 (Fig. 3) | 120 | IN | GND | OUT | | | | | “ | | | | | | | | “ | $\overline{E1}$ to $\overline{1Y}$ | “ | “ | “ | “ | “ | “ | “ |
| | | 121 | “ | | | GND | OUT | | | “ | | | | | | | | “ | $\overline{E1}$ to $\overline{2Y}$ | “ | “ | “ | “ | “ | “ | “ |
| | | 122 | “ | | | | | GND | OUT | “ | | | | | | | | “ | $\overline{E1}$ to $\overline{3Y}$ | “ | “ | “ | “ | “ | “ | “ |
| | | 123 | “ | | | | | | | “ | OUT | GND | | | | | | “ | $\overline{E1}$ to $\overline{4Y}$ | “ | “ | “ | “ | “ | “ | “ |
| | | 124 | | | | | | | | “ | | | OUT | GND | | | IN | “ | $\overline{E2}$ to $\overline{5Y}$ | “ | “ | “ | “ | “ | “ | “ |
| | | 125 | | | | | | | | “ | | | | | OUT | GND | IN | “ | $\overline{E2}$ to $\overline{6Y}$ | “ | “ | “ | “ | “ | “ | “ |
| $t_{TLH}$ | 3004 (Fig. 3) | 126 | GND | IN | OUT | | | | | “ | | | | | | | | “ | $\overline{1Y}$ | 2 | 12 | 2 | 16 | 2 | 12 | “ |
| | | 127 | “ | | | IN | OUT | | | “ | | | | | | | | “ | $\overline{2Y}$ | “ | “ | “ | “ | “ | “ | “ |
| | | 128 | “ | | | | | IN | OUT | “ | | | | | | | | “ | $\overline{3Y}$ | “ | “ | “ | “ | “ | “ | “ |
| | | 129 | “ | | | | | | | “ | OUT | IN | | | | | | “ | $\overline{4Y}$ | “ | “ | “ | “ | “ | “ | “ |
| | | 130 | | | | | | | | “ | | | OUT | IN | | | GND | “ | $\overline{5Y}$ | “ | “ | “ | “ | “ | “ | “ |
| | | 131 | | | | | | | | “ | | | | | OUT | IN | GND | “ | $\overline{6Y}$ | “ | “ | “ | “ | “ | “ | “ |
| $t_{THL}$ | 3004 (Fig. 3) | 132 | GND | IN | OUT | | | | | “ | | | | | | | | “ | $\overline{1Y}$ | “ | “ | “ | “ | “ | “ | “ |
| | | 133 | “ | | | IN | OUT | | | “ | | | | | | | | “ | $\overline{2Y}$ | “ | “ | “ | “ | “ | “ | “ |
| | | 134 | “ | | | | | IN | OUT | “ | | | | | | | | “ | $\overline{3Y}$ | “ | “ | “ | “ | “ | “ | “ |
| | | 135 | “ | | | | | | | “ | OUT | IN | | | | | | “ | $\overline{4Y}$ | “ | “ | “ | “ | “ | “ | “ |
| | | 136 | | | | | | | | “ | | | OUT | IN | | | GND | “ | $\overline{5Y}$ | “ | “ | “ | “ | “ | “ | “ |
| | | 137 | | | | | | | | “ | | | | | OUT | IN | GND | “ | $\overline{6Y}$ | “ | “ | “ | “ | “ | “ | “ |

See footnotes at end of table.

TABLE III. Group A inspection for device type 10.

| Symbol | MIL-STD-883 method | Cases R, S, and 2 | Terminal conditions 1/ | | | | | | | | | | | | | | | | | | | | Measured terminal | Test limits | | | | | | Unit |
|---|---|---|---|---|---|---|---|---|---|---|---|---|---|---|---|---|---|---|---|---|---|---|---|---|---|---|---|---|---|---|
| | | | 1 | 2 | 3 | 4 | 5 | 6 | 7 | 8 | 9 | 10 | 11 | 12 | 13 | 14 | 15 | 16 | 17 | 18 | 19 | 20 | | Subgroup 1 $T_C$ = +25°C | | Subgroup 2 $T_C$ = +125°C | | Subgroup 3 $T_C$ = -55°C | | |
| | | Test no. | $\overline{1G}$ | 1A | 2A | 3A | 4A | 5A | 6A | 7A | 8A | GND | $\overline{8Y}$ | $\overline{7Y}$ | $\overline{6Y}$ | $\overline{5Y}$ | $\overline{4Y}$ | $\overline{3Y}$ | $\overline{2Y}$ | $\overline{1Y}$ | $\overline{2G}$ | $V_{CC}$ | | Min | Max | Min | Max | Min | Max | |
| $V_{IC}$ (pos) | | 1 | 1mA | | | | | | | | | OPEN | | | | | | | | | | GND | $\overline{1G}$ | 1/ | 1.5 | | | | | V |
| | | 2 | | 1mA | | | | | | | | " | | | | | | | | | | " | 1A | " | " | | | | | " |
| | | 3 | | | 1mA | | | | | | | " | | | | | | | | | | " | 2A | " | " | | | | | " |
| | | 4 | | | | 1mA | | | | | | " | | | | | | | | | | " | 3A | " | " | | | | | " |
| | | 5 | | | | | 1mA | | | | | " | | | | | | | | | | " | 4A | " | " | | | | | " |
| | | 6 | | | | | | 1mA | | | | " | | | | | | | | | | " | 5A | " | " | | | | | " |
| | | 7 | | | | | | | 1mA | | | " | | | | | | | | | | " | 6A | " | " | | | | | " |
| | | 8 | | | | | | | | 1mA | | " | | | | | | | | | | " | 7A | " | " | | | | | " |
| | | 9 | | | | | | | | | 1mA | " | | | | | | | | | | " | 8A | " | " | | | | | " |
| | | 10 | | | | | | | | | | " | | | | | | | | | 1mA | " | $\overline{2G}$ | " | " | | | | | " |
| $V_{IC}$ (neg) | | 11 | -1mA | | | | | | | | | GND | | | | | | | | | | OPEN | 1G | | -1.5 | | | | | " |
| | | 12 | | -1mA | | | | | | | | " | | | | | | | | | | " | 1A | | " | | | | | " |
| | | 13 | | | -1mA | | | | | | | " | | | | | | | | | | " | 2A | | " | | | | | " |
| | | 14 | | | | -1mA | | | | | | " | | | | | | | | | | " | 3A | | " | | | | | " |
| | | 15 | | | | | -1mA | | | | | " | | | | | | | | | | " | 4A | | " | | | | | " |
| | | 16 | | | | | | -1mA | | | | " | | | | | | | | | | " | 5A | | " | | | | | " |
| | | 17 | | | | | | | -1mA | | | " | | | | | | | | | | " | 6A | | " | | | | | " |
| | | 18 | | | | | | | | -1mA | | " | | | | | | | | | | " | 7A | | " | | | | | " |
| | | 19 | | | | | | | | | -1mA | " | | | | | | | | | | " | 8A | | " | | | | | " |
| | | 20 | | | | | | | | | | " | | | | | | | | | -1mA | " | $\overline{2G}$ | | " | | | | | " |
| $I_{CC}$ | 3005 | 21 | GND | GND | GND | GND | GND | GND | GND | GND | GND | " | | | | | | | | | GND | 6V | $V_{CC}$ | | 0.2 | | 20 | | | µA |
| $I_{CC}$ | 3005 | 22 | GND | 6V | 6V | 6V | 6V | 6V | 6V | 6V | 6V | " | | | | | | | | | " | " | " | | 0.2 | | 20 | | | " |
| $I_{CCZ}$ | | 23 | 6V | 6V | 6V | 6V | 6V | GND | GND | GND | GND | " | | | | | | | | | " | " | " | | 0.1 | | 10 | | | " |
| | | 24 | GND | GND | GND | GND | GND | 6V | 6V | 6V | 6V | " | | | | | | | | | 6V | 6V | " | | 0.1 | | 10 | | | " |
| $V_{OH3}$ | 3006 | 25 | 1.2V | 1.2V | | | | | | | | " | | | | | | | | -20µA | 1.2V | " | $\overline{1Y}$ | 5.95 | | 5.95 | | 5.95 | | V |
| | | 26 | " | | 1.2V | | | | | | | " | | | | | | | -20µA | | " | " | $\overline{2Y}$ | " | | " | | " | | " |
| | | 27 | " | | | 1.2V | | | | | | " | | | | | | -20µA | | | " | " | $\overline{3Y}$ | " | | " | | " | | " |
| | | 28 | " | | | | 1.2V | | | | | " | | | | | -20µA | | | | " | " | $\overline{4Y}$ | " | | " | | " | | " |
| | | 29 | " | | | | | 1.2V | | | | " | | | | -20µA | | | | | " | " | $\overline{5Y}$ | " | | " | | " | | " |
| | | 30 | " | | | | | | 1.2V | | | " | | | -20µA | | | | | | " | " | $\overline{6Y}$ | " | | " | | " | | " |
| | | 31 | " | | | | | | | 1.2V | | " | | -20µA | | | | | | | " | " | $\overline{7Y}$ | " | | " | | " | | " |
| | | 32 | " | | | | | | | | 1.2V | " | -20µA | | | | | | | | " | " | $\overline{8Y}$ | " | | " | | " | | " |
| $V_{OH5}$ | 3006 | 33 | " | 1.2V | | | | | | | | " | | | | | | | | -7.8mA | " | " | $\overline{1Y}$ | 5.48 | | 5.2 | | 5.48 | | " |
| | | 34 | " | | 1.2V | | | | | | | " | | | | | | | -7.8mA | | " | " | $\overline{2Y}$ | " | | " | | " | | " |
| | | 35 | " | | | 1.2V | | | | | | " | | | | | | -7.8mA | | | " | " | $\overline{3Y}$ | " | | " | | " | | " |
| | | 36 | " | | | | 1.2V | | | | | " | | | | | -7.8mA | | | | " | " | $\overline{4Y}$ | " | | " | | " | | " |
| | | 37 | " | | | | | 1.2V | | | | " | | | | -7.8mA | | | | | " | " | $\overline{5Y}$ | " | | " | | " | | " |
| | | 38 | " | | | | | | 1.2V | | | " | | | -7.8mA | | | | | | " | " | $\overline{6Y}$ | " | | " | | " | | " |
| | | 39 | " | | | | | | | 1.2V | | " | | -7.8mA | | | | | | | " | " | $\overline{7Y}$ | " | | " | | " | | " |
| | | 40 | " | | | | | | | | 1.2V | " | -7.8mA | | | | | | | | " | " | $\overline{8Y}$ | " | | " | | " | | " |
| $V_{OL3}$ | 3007 | 41 | " | 4.2V | | | | | | | | " | | | | | | | | 20µA | " | " | $\overline{1Y}$ | | 0.05 | | 0.05 | | 0.05 | " |
| | | 42 | " | | 4.2V | | | | | | | " | | | | | | | 20µA | | " | " | $\overline{2Y}$ | | " | | " | | " | " |
| | | 43 | " | | | 4.2V | | | | | | " | | | | | | 20µA | | | " | " | $\overline{3Y}$ | | " | | " | | " | " |
| | | 44 | " | | | | 4.2V | | | | | " | | | | | 20µA | | | | " | " | $\overline{4Y}$ | | " | | " | | " | " |
| | | 45 | " | | | | | 4.2V | | | | " | | | | 20µA | | | | | " | " | $\overline{5Y}$ | | " | | " | | " | " |
| | | 46 | " | | | | | | 4.2V | | | " | | | 20µA | | | | | | " | " | $\overline{6Y}$ | | " | | " | | " | " |
| | | 47 | " | | | | | | | 4.2V | | " | | 20µA | | | | | | | " | " | $\overline{7Y}$ | | " | | " | | " | " |
| | | 48 | " | | | | | | | | 4.2V | " | 20µA | | | | | | | | " | " | $\overline{8Y}$ | | " | | " | | " | " |
| $V_{OL5}$ | 3007 | 49 | " | 4.2V | | | | | | | | " | | | | | | | | 7.8mA | " | " | $\overline{1Y}$ | | 0.26 | | 0.4 | | 0.26 | " |
| | | 50 | " | | 4.2V | | | | | | | " | | | | | | | 7.8mA | | " | " | $\overline{2Y}$ | | " | | " | | " | " |
| | | 51 | " | | | 4.2V | | | | | | " | | | | | | 7.8mA | | | " | " | $\overline{3Y}$ | | " | | " | | " | " |
| | | 52 | " | | | | 4.2V | | | | | " | | | | | 7.8mA | | | | " | " | $\overline{4Y}$ | | " | | " | | " | " |
| | | 53 | " | | | | | 4.2V | | | | " | | | | 7.8mA | | | | | " | " | $\overline{5Y}$ | | " | | " | | " | " |
| | | 54 | " | | | | | | 4.2V | | | " | | | 7.8mA | | | | | | " | " | $\overline{6Y}$ | | " | | " | | " | " |
| | | 55 | " | | | | | | | 4.2V | | " | | 7.8mA | | | | | | | " | " | $\overline{7Y}$ | | " | | " | | " | " |
| | | 56 | " | | | | | | | | 4.2V | " | 7.8mA | | | | | | | | " | " | $\overline{8Y}$ | | " | | " | | " | " |
| $I_{OZH}$ | | 57 | 0.8V | 9/ | | | | | | | | " | | | | | | | | 6V | 9/ | " | $\overline{1Y}$ | | 0.2 | | 2.0 | | | µA |
| | | 58 | " | | 9/ | | | | | | | " | | | | | | | 6V | | " | " | $\overline{2Y}$ | | " | | " | | | " |
| | | 59 | " | | | 9/ | | | | | | " | | | | | | 6V | | | " | " | $\overline{3Y}$ | | " | | " | | | " |
| | | 60 | " | | | | 9/ | | | | | " | | | | | 6V | | | | " | " | $\overline{4Y}$ | | " | | " | | | " |
| | | 61 | " | | | | | 9/ | | | | " | | | | 6V | | | | | " | " | $\overline{5Y}$ | | " | | " | | | " |
| | | 62 | " | | | | | | 9/ | | | " | | | 6V | | | | | | " | " | $\overline{6Y}$ | | " | | " | | | " |
| | | 63 | " | | | | | | | 9/ | | " | | 6V | | | | | | | " | " | $\overline{7Y}$ | | " | | " | | | " |
| | | 64 | " | | | | | | | | 9/ | " | 6V | | | | | | | | " | " | $\overline{8Y}$ | | " | | " | | | " |

See footnotes at end of table.

TABLE III. Group A inspection for device type 10 – Continued.

| Symbol | MIL-STD-883 method | Cases R, S, and 2 | Terminal conditions 1/ | | | | | | | | | | | | | | | | | | | | Measured terminal | Test limits | | | | | | Unit |
|---|---|---|---|---|---|---|---|---|---|---|---|---|---|---|---|---|---|---|---|---|---|---|---|---|---|---|---|---|---|---|
| | | | 1 | 2 | 3 | 4 | 5 | 6 | 7 | 8 | 9 | 10 | 11 | 12 | 13 | 14 | 15 | 16 | 17 | 18 | 19 | 20 | | Subgroup 1 $T_C$ = +25°C | | Subgroup 2 $T_C$ = +125°C | | Subgroup 3 $T_C$ = -55°C | | |
| | | Test no. | $\overline{1G}$ | 1A | 2A | 3A | 4A | 5A | 6A | 7A | 8A | GND | $\overline{8Y}$ | $\overline{7Y}$ | $\overline{6Y}$ | $\overline{5Y}$ | $\overline{4Y}$ | $\overline{3Y}$ | $\overline{2Y}$ | $\overline{1Y}$ | $\overline{2G}$ | $V_{CC}$ | | Min | Max | Min | Max | Min | Max | |
| $I_{OZL}$ | | 65 | 9/ | 9/ | | | | | | | | GND | | | | | | | | GND | 0.8V | 6V | $\overline{1Y}$ | | -0.2 | | -2.0 | | | µA |
| | | 66 | " | | 9/ | | | | | | | " | | | | | | | GND | | " | " | $\overline{2Y}$ | | " | | " | | | " |
| | | 67 | " | | | 9/ | | | | | | " | | | | | | GND | | | " | " | $\overline{3Y}$ | | " | | " | | | " |
| | | 68 | " | | | | 9/ | | | | | " | | | | | GND | | | | " | " | $\overline{4Y}$ | | " | | " | | | " |
| | | 69 | " | | | | | 9/ | | | | " | | | | GND | | | | | " | " | $\overline{5Y}$ | | " | | " | | | " |
| | | 70 | " | | | | | | 9/ | | | " | | | GND | | | | | | " | " | $\overline{6Y}$ | | " | | " | | | " |
| | | 71 | " | | | | | | | 9/ | | " | | GND | | | | | | | " | " | $\overline{7Y}$ | | " | | " | | | " |
| | | 72 | " | | | | | | | | 9/ | " | GND | | | | | | | | " | " | $\overline{8Y}$ | | " | | " | | | " |
| $I_{IH}$ | 3010 | 73 | 6V | GND | GND | GND | GND | GND | GND | GND | GND | " | | | | | | | | | GND | 6V | $\overline{1G}$ | | .05 | | 0.1 | | | " |
| | | 74 | GND | 6V | " | " | " | " | " | " | " | " | | | | | | | | | " | " | 1A | | " | | " | | | " |
| | | 75 | " | GND | 6V | " | " | " | " | " | " | " | | | | | | | | | " | " | 2A | | " | | " | | | " |
| | | 76 | " | " | GND | 6V | " | " | " | " | " | " | | | | | | | | | " | " | 3A | | " | | " | | | " |
| | | 77 | " | " | " | GND | 6V | " | " | " | " | " | | | | | | | | | " | " | 4A | | " | | " | | | " |
| | | 78 | " | " | " | " | GND | 6V | " | " | " | " | | | | | | | | | " | " | 5A | | " | | " | | | " |
| | | 79 | " | " | " | " | " | GND | 6V | " | " | " | | | | | | | | | " | " | 6A | | " | | " | | | " |
| | | 80 | " | " | " | " | " | " | GND | 6V | " | " | | | | | | | | | " | " | 7A | | " | | " | | | " |
| | | 81 | " | " | " | " | " | " | " | GND | 6V | " | | | | | | | | | " | " | 8A | | " | | " | | | " |
| | | 82 | " | " | " | " | " | " | " | GND | GND | " | | | | | | | | | 6V | " | $\overline{2G}$ | | " | | " | | | " |
| $I_{IL}$ | 3009 | 83 | GND | 6V | 6V | 6V | 6V | 6V | 6V | 6V | 6V | " | | | | | | | | | " | " | $\overline{1G}$ | | -.05 | | -0.1 | | | " |
| | | 84 | 6V | GND | " | " | " | " | " | " | " | " | | | | | | | | | " | " | 1A | | " | | " | | | " |
| | | 85 | " | 6V | GND | " | " | " | " | " | " | " | | | | | | | | | " | " | 2A | | " | | " | | | " |
| | | 86 | " | " | 6V | GND | " | " | " | " | " | " | | | | | | | | | " | " | 3A | | " | | " | | | " |
| | | 87 | " | " | " | 6V | GND | " | " | " | " | " | | | | | | | | | " | " | 4A | | " | | " | | | " |
| | | 88 | " | " | " | " | 6V | GND | " | " | " | " | | | | | | | | | " | " | 5A | | " | | " | | | " |
| | | 89 | " | " | " | " | " | 6V | GND | " | " | " | | | | | | | | | " | " | 6A | | " | | " | | | " |
| | | 90 | " | " | " | " | " | " | 6V | GND | " | " | | | | | | | | | " | " | 7A | | " | | " | | | " |
| | | 91 | " | " | " | " | " | " | " | 6V | GND | " | | | | | | | | | " | " | 8A | | " | | " | | | " |
| | | 92 | " | " | " | " | " | " | " | 6V | 6V | " | | | | | | | | | GND | " | $\overline{2G}$ | | " | | " | | | " |
| $I_{OS4}$ | 3011 | 93 | GND | GND | | | | | | | | GND | | | | | | | | GND | GND | 4V | $\overline{1Y}$ | -10 | -135 | -10 | -135 | -10 | -135 | mA |
| | | 94 | " | | GND | | | | | | | " | | | | | | | GND | | " | " | $\overline{2Y}$ | " | " | " | " | " | " | " |
| | | 95 | " | | | GND | | | | | | " | | | | | | GND | | | " | " | $\overline{3Y}$ | " | " | " | " | " | " | " |
| | | 96 | " | | | | GND | | | | | " | | | | | GND | | | | " | " | $\overline{4Y}$ | " | " | " | " | " | " | " |
| | | 97 | " | | | | | GND | | | | " | | | | GND | | | | | " | " | $\overline{5Y}$ | " | " | " | " | " | " | " |
| | | 98 | " | | | | | | GND | | | " | | | GND | | | | | | " | " | $\overline{6Y}$ | " | " | " | " | " | " | " |
| | | 99 | " | | | | | | | GND | | " | | GND | | | | | | | " | " | $\overline{7Y}$ | " | " | " | " | " | " | " |
| | | 100 | " | | | | | | | | GND | " | GND | | | | | | | | " | " | $\overline{8Y}$ | " | " | " | " | " | " | " |
| | | | | | | | | | | | | | | | | | | | | | | | | Subgroup 4 $T_C$ = +25°C | | | | | | |
| | | | | | | | | | | | | | | | | | | | | | | | | Min | Max | | | | | |
| $C_i$ | 3012 | 101 | 2/ | | | | | | | | | GND | | | | | | | | | | GND | $\overline{1G}$ | | 10 | | | | | pF |
| | | 102 | | 2/ | | | | | | | | " | | | | | | | | | | " | 1A | | " | | | | | " |
| | | 103 | | | 2/ | | | | | | | " | | | | | | | | | | " | 2A | | " | | | | | " |
| | | 104 | | | | 2/ | | | | | | " | | | | | | | | | | " | 3A | | " | | | | | " |
| | | 105 | | | | | 2/ | | | | | " | | | | | | | | | | " | 4A | | " | | | | | " |
| | | 106 | | | | | | 2/ | | | | " | | | | | | | | | | " | 5A | | " | | | | | " |
| | | 107 | | | | | | | 2/ | | | " | | | | | | | | | | " | 6A | | " | | | | | " |
| | | 108 | | | | | | | | 2/ | | " | | | | | | | | | | " | 7A | | " | | | | | " |
| | | 109 | | | | | | | | | 2/ | " | | | | | | | | | | " | 8A | | " | | | | | " |
| | | 110 | | | | | | | | | | " | | | | | | | | | 2/ | " | $\overline{2G}$ | | " | | | | | " |
| $C_o$ | 3012 | 111 | GND | | | | | | | | | " | | | | | 2/ | 2/ | 2/ | 2/ | 6V | 6V | $\overline{Y}$'s | | 20 | | | | | " |
| | | 112 | 6V | | | | | | | | | " | 2/ | 2/ | 2/ | 2/ | | | | | GND | 6V | $\overline{Y}$'s | | 20 | | | | | " |
| | | | | | | | | | | | | | | | | | | | | | | | | Subgroup 7 $T_C$ = +25°C | | Subgroup 8 $T_C$ = +125°C | | Subgroup 8 $T_C$ = -55°C | | |
| | | | | | | | | | | | | | | | | | | | | | | | | Min | Max | Min | Max | Min | Max | |
| Truth table 6/ | | 113 | B | B | B | B | B | B | B | B | B | GND | H | H | H | H | H | H | H | H | B | 4.5V | 7/ | | | | | | | |
| | | 114 | B | A | A | A | A | A | A | A | A | " | L | L | L | L | L | L | L | L | B | 4.5V | 7/ | | | | | | | |

See footnotes at end of table.

TABLE III. Group A inspection for device type 10 – Continued.

| Symbol | MIL-STD-883 method | Cases R, S, and 2 | Terminal conditions 1/ | | | | | | | | | | | | | | | | | | | | Measured terminal | Test limits | | | | | | Unit |
|---|---|---|---|---|---|---|---|---|---|---|---|---|---|---|---|---|---|---|---|---|---|---|---|---|---|---|---|---|---|---|
| | | | 1 | 2 | 3 | 4 | 5 | 6 | 7 | 8 | 9 | 10 | 11 | 12 | 13 | 14 | 15 | 16 | 17 | 18 | 19 | 20 | | Subgroup 9 $T_C$ = +25°C | | Subgroup 10 $T_C$ = +125°C | | Subgroup 11 $T_C$ = -55°C | | |
| | | Test no. | $\overline{1G}$ | 1A | 2A | 3A | 4A | 5A | 6A | 7A | 8A | GND | $\overline{8Y}$ | $\overline{7Y}$ | $\overline{6Y}$ | $\overline{5Y}$ | $\overline{4Y}$ | $\overline{3Y}$ | $\overline{2Y}$ | $\overline{1Y}$ | $\overline{2G}$ | $V_{CC}$ | | Min | Max | Min | Max | Min | Max | |
| $t_{PHL}$ | 3003 (Fig. 3) | 115 | GND | IN | | | | | | | | GND | | | | | | | | OUT | GND | 4.5V | 1A to $\overline{1Y}$ | 8 | 22 | 8 | 29 | 8 | 22 | ns |
| | | 116 | " | | IN | | | | | | | " | | | | | | | OUT | | " | " | 2A to $\overline{2Y}$ | " | " | " | " | " | " | " |
| | | 117 | " | | | IN | | | | | | " | | | | | | OUT | | | " | " | 3A to $\overline{3Y}$ | " | " | " | " | " | " | " |
| | | 118 | " | | | | IN | | | | | " | | | | | OUT | | | | " | " | 4A to $\overline{4Y}$ | " | " | " | " | " | " | " |
| | | 119 | " | | | | | IN | | | | " | | | | OUT | | | | | " | " | 5A to $\overline{5Y}$ | " | " | " | " | " | " | " |
| | | 120 | " | | | | | | IN | | | " | | | OUT | | | | | | " | " | 6A to $\overline{6Y}$ | " | " | " | " | " | " | " |
| | | 121 | " | | | | | | | IN | | " | | OUT | | | | | | | " | " | 7A to $\overline{7Y}$ | " | " | " | " | " | " | " |
| | | 122 | " | | | | | | | | IN | " | OUT | | | | | | | | " | " | 8A to 8Y | " | " | " | " | " | " | " |
| $t_{PLH}$ | 3003 (Fig. 3) | 123 | " | IN | | | | | | | | " | | | | | | | OUT | OUT | " | " | 1A to $\overline{1Y}$ | " | " | " | " | " | " | " |
| | | 124 | " | | IN | | | | | | | " | | | | | | | | | " | " | 2A to $\overline{2Y}$ | " | " | " | " | " | " | " |
| | | 125 | " | | | IN | | | | | | " | | | | | | OUT | | | " | " | 3A to $\overline{3Y}$ | " | " | " | " | " | " | " |
| | | 126 | " | | | | IN | | | | | " | | | | | OUT | | | | " | " | 4A to $\overline{4Y}$ | " | " | " | " | " | " | " |
| | | 127 | " | | | | | IN | | | | " | | | | OUT | | | | | " | " | 5A to $\overline{5Y}$ | " | " | " | " | " | " | " |
| | | 128 | " | | | | | | IN | | | " | | | OUT | | | | | | " | " | 6A to $\overline{6Y}$ | " | " | " | " | " | " | " |
| | | 129 | " | | | | | | | IN | | " | | OUT | | | | | | | " | " | 7A to $\overline{7Y}$ | " | " | " | " | " | " | " |
| | | 130 | " | | | | | | | | IN | " | OUT | | | | | | | | " | " | 8A to 8Y | " | " | " | " | " | " | " |
| $t_{PZH}$ | 3003 (Fig. 3) | 131 | IN | GND | | | | | | | | " | | | | | | | | OUT | " | " | $\overline{1G}$ to $\overline{1Y}$ | " | 31 | " | 41 | " | 31 | " |
| | | 132 | " | | GND | | | | | | | " | | | | | | | OUT | | " | " | $\overline{1G}$ to $\overline{2Y}$ | " | " | " | " | " | " | " |
| | | 133 | " | | | GND | | | | | | " | | | | | | OUT | | | " | " | $\overline{1G}$ to $\overline{3Y}$ | " | " | " | " | " | " | " |
| | | 134 | " | | | | GND | | | | | " | | | | | OUT | | | | " | " | $\overline{1G}$ to $\overline{4Y}$ | " | " | " | " | " | " | " |
| | | 135 | " | | | | | GND | | | | " | | | | OUT | | | | | " | " | $\overline{1G}$ to $\overline{5Y}$ | " | " | " | " | " | " | " |
| | | 136 | " | | | | | | GND | | | " | | | OUT | | | | | | " | " | $\overline{1G}$ to $\overline{6Y}$ | " | " | " | " | " | " | " |
| | | 137 | " | | | | | | | GND | | " | | OUT | | | | | | | " | " | $\overline{1G}$ to $\overline{7Y}$ | " | " | " | " | " | " | " |
| | | 138 | " | | | | | | | | GND | " | OUT | | | | | | | | " | " | 1G to 8Y | " | " | " | " | " | " | " |
| | | 139 | GND | GND | | | | | | | | " | | | | | | | | OUT | IN | " | $\overline{2G}$ to $\overline{1Y}$ | " | " | " | " | " | " | " |
| | | 140 | " | | GND | | | | | | | " | | | | | | | OUT | | " | " | $\overline{2G}$ to $\overline{2Y}$ | " | " | " | " | " | " | " |
| | | 141 | " | | | GND | | | | | | " | | | | | | OUT | | | " | " | $\overline{2G}$ to $\overline{3Y}$ | " | " | " | " | " | " | " |
| | | 142 | " | | | | GND | | | | | " | | | | | OUT | | | | " | " | $\overline{2G}$ to $\overline{4Y}$ | " | " | " | " | " | " | " |
| | | 143 | " | | | | | GND | | | | " | | | | OUT | | | | | " | " | $\overline{2G}$ to $\overline{5Y}$ | " | " | " | " | " | " | " |
| | | 144 | " | | | | | | GND | | | " | | | OUT | | | | | | " | " | $\overline{2G}$ to $\overline{6Y}$ | " | " | " | " | " | " | " |
| | | 145 | " | | | | | | | GND | | " | | OUT | | | | | | | " | " | $\overline{2G}$ to $\overline{7Y}$ | " | " | " | " | " | " | " |
| | | 146 | " | | | | | | | | GND | " | OUT | | | | | | | | " | " | $\overline{2G}$ to $\overline{8Y}$ | " | " | " | " | " | " | " |
| $t_{PZL}$ | 3003 (Fig. 3) | 147 | IN | 4.5V | | | | | | | | " | | | | | | | | OUT | GND | " | $\overline{1G}$ to $\overline{1Y}$ | " | " | " | " | " | " | " |
| | | 148 | " | | 4.5V | | | | | | | " | | | | | | | OUT | | " | " | $\overline{1G}$ to $\overline{2Y}$ | " | " | " | " | " | " | " |
| | | 149 | " | | | 4.5V | | | | | | " | | | | | | OUT | | | " | " | $\overline{1G}$ to $\overline{3Y}$ | " | " | " | " | " | " | " |
| | | 150 | " | | | | 4.5V | | | | | " | | | | | OUT | | | | " | " | $\overline{1G}$ to $\overline{4Y}$ | " | " | " | " | " | " | " |
| | | 151 | " | | | | | 4.5V | | | | " | | | | OUT | | | | | " | " | $\overline{1G}$ to $\overline{5Y}$ | " | " | " | " | " | " | " |
| | | 152 | " | | | | | | 4.5V | | | " | | | OUT | | | | | | " | " | $\overline{1G}$ to $\overline{6Y}$ | " | " | " | " | " | " | " |
| | | 153 | " | | | | | | | 4.5V | | " | | OUT | | | | | | | " | " | $\overline{1G}$ to $\overline{7Y}$ | " | " | " | " | " | " | " |
| | | 154 | " | | | | | | | | 4.5V | " | OUT | | | | | | | | " | " | $\overline{1G}$ to 8Y | " | " | " | " | " | " | " |
| | | 155 | GND | 4.5V | | | | | | | | " | | | | | | | | OUT | IN | " | $\overline{2G}$ to $\overline{1Y}$ | " | " | " | " | " | " | " |
| | | 156 | " | | 4.5V | | | | | | | " | | | | | | | OUT | | " | " | $\overline{2G}$ to $\overline{2Y}$ | " | " | " | " | " | " | " |
| | | 157 | " | | | 4.5V | | | | | | " | | | | | | OUT | | | " | " | $\overline{2G}$ to $\overline{3Y}$ | " | " | " | " | " | " | " |
| | | 158 | " | | | | 4.5V | | | | | " | | | | | OUT | | | | " | " | $\overline{2G}$ to $\overline{4Y}$ | " | " | " | " | " | " | " |
| | | 159 | " | | | | | 4.5V | | | | " | | | | OUT | | | | | " | " | $\overline{2G}$ to $\overline{5Y}$ | " | " | " | " | " | " | " |
| | | 160 | " | | | | | | 4.5V | | | " | | | OUT | | | | | | " | " | $\overline{2G}$ to $\overline{6Y}$ | " | " | " | " | " | " | " |
| | | 161 | " | | | | | | | 4.5V | | " | | OUT | | | | | | | " | " | $\overline{2G}$ to $\overline{7Y}$ | " | " | " | " | " | " | " |
| | | 162 | " | | | | | | | | 4.5V | " | OUT | | | | | | | | " | " | $\overline{2G}$ to $\overline{8Y}$ | " | " | " | " | " | " | " |

See footnotes at end of table.

TABLE III. Group A inspection for device type 10 – Continued.

| Symbol | MIL-STD-883 method | Cases R, S, and 2 | Terminal conditions 1/ | | | | | | | | | | | | | | | | | | | | Measured terminal | Test limits | | | | | | Unit |
|---|---|---|---|---|---|---|---|---|---|---|---|---|---|---|---|---|---|---|---|---|---|---|---|---|---|---|---|---|---|---|
| | | | 1 | 2 | 3 | 4 | 5 | 6 | 7 | 8 | 9 | 10 | 11 | 12 | 13 | 14 | 15 | 16 | 17 | 18 | 19 | 20 | | Subgroup 1 $T_C$ = +25°C | | Subgroup 2 $T_C$ = +125°C | | Subgroup 3 $T_C$ = -55°C | | |
| | | Test no. | $\overline{1G}$ | 1A | 2A | 3A | 4A | 5A | 6A | 7A | 8A | GND | $\overline{8Y}$ | $\overline{7Y}$ | $\overline{6Y}$ | $\overline{5Y}$ | $\overline{4Y}$ | $\overline{3Y}$ | $\overline{2Y}$ | $\overline{1Y}$ | $\overline{2G}$ | $V_{CC}$ | | Min | Max | Min | Max | Min | Max | |
| $t_{PLZ}$ | 3003 (Fig. 3) | 163 | IN | 4.5V | | | | | | | | GND | | | | | | | | OUT | GND | 4.5V | $\overline{1G}$ to $\overline{1Y}$ | 8 | 31 | 8 | 41 | 8 | 31 | ns |
| | | 164 | " | | 4.5V | | | | | | | " | | | | | | | OUT | | " | " | $\overline{1G}$ to $\overline{2Y}$ | " | " | " | " | " | " | " |
| | | 165 | " | | | 4.5V | | | | | | " | | | | | | OUT | | | " | " | $\overline{1G}$ to $\overline{3Y}$ | " | " | " | " | " | " | " |
| | | 166 | " | | | | 4.5V | | | | | " | | | | | OUT | | | | " | " | $\overline{1G}$ to $\overline{4Y}$ | " | " | " | " | " | " | " |
| | | 167 | " | | | | | 4.5V | | | | " | | | | OUT | | | | | " | " | $\overline{1G}$ to $\overline{5Y}$ | " | " | " | " | " | " | " |
| | | 168 | " | | | | | | 4.5V | | | " | | | OUT | | | | | | " | " | $\overline{1G}$ to $\overline{6Y}$ | " | " | " | " | " | " | " |
| | | 169 | " | | | | | | | 4.5V | | " | | OUT | | | | | | | " | " | $\overline{1G}$ to $\overline{7Y}$ | " | " | " | " | " | " | " |
| | | 170 | " | | | | | | | | 4.5V | " | OUT | | | | | | | | " | " | 1G to $\overline{8Y}$ | " | " | " | " | " | " | " |
| | | 171 | GND | 4.5V | | | | | | | | " | | | | | | | | OUT | IN | " | $\overline{2G}$ to $\overline{1Y}$ | " | " | " | " | " | " | " |
| | | 172 | " | | 4.5V | | | | | | | " | | | | | | | OUT | | " | " | $\overline{2G}$ to $\overline{2Y}$ | " | " | " | " | " | " | " |
| | | 173 | " | | | 4.5V | | | | | | " | | | | | | OUT | | | " | " | $\overline{2G}$ to $\overline{3Y}$ | " | " | " | " | " | " | " |
| | | 174 | " | | | | 4.5V | | | | | " | | | | | OUT | | | | " | " | $\overline{2G}$ to $\overline{4Y}$ | " | " | " | " | " | " | " |
| | | 175 | " | | | | | 4.5V | | | | " | | | | OUT | | | | | " | " | $\overline{2G}$ to $\overline{5Y}$ | " | " | " | " | " | " | " |
| | | 176 | " | | | | | | 4.5V | | | " | | | OUT | | | | | | " | " | $\overline{2G}$ to $\overline{6Y}$ | " | " | " | " | " | " | " |
| | | 177 | " | | | | | | | 4.5V | | " | | OUT | | | | | | | " | " | $\overline{2G}$ to $\overline{7Y}$ | " | " | " | " | " | " | " |
| | | 178 | " | | | | | | | | 4.5V | " | OUT | | | | | | | | " | " | 2G to $\overline{8Y}$ | " | " | " | " | " | " | " |
| $t_{PHZ}$ | 3003 (Fig. 3) | 179 | IN | GND | | | | | | | | " | | | | | | | | OUT | GND | " | $\overline{1G}$ to $\overline{1Y}$ | " | " | " | " | " | " | " |
| | | 180 | " | | GND | | | | | | | " | | | | | | | OUT | | " | " | $\overline{1G}$ to $\overline{2Y}$ | " | " | " | " | " | " | " |
| | | 181 | " | | | GND | | | | | | " | | | | | | OUT | | | " | " | $\overline{1G}$ to $\overline{3Y}$ | " | " | " | " | " | " | " |
| | | 182 | " | | | | GND | | | | | " | | | | | OUT | | | | " | " | $\overline{1G}$ to $\overline{4Y}$ | " | " | " | " | " | " | " |
| | | 183 | " | | | | | GND | | | | " | | | | OUT | | | | | " | " | $\overline{1G}$ to $\overline{5Y}$ | " | " | " | " | " | " | " |
| | | 184 | " | | | | | | GND | | | " | | | OUT | | | | | | " | " | $\overline{1G}$ to $\overline{6Y}$ | " | " | " | " | " | " | " |
| | | 185 | " | | | | | | | GND | | " | | OUT | | | | | | | " | " | $\overline{1G}$ to $\overline{7Y}$ | " | " | " | " | " | " | " |
| | | 186 | " | | | | | | | | GND | " | OUT | | | | | | | | " | " | 1G to $\overline{8Y}$ | " | " | " | " | " | " | " |
| | | 187 | GND | GND | | | | | | | | " | | | | | | | | OUT | IN | " | $\overline{2G}$ to $\overline{1Y}$ | " | " | " | " | " | " | " |
| | | 188 | " | | GND | | | | | | | " | | | | | | | OUT | | " | " | $\overline{2G}$ to $\overline{2Y}$ | " | " | " | " | " | " | " |
| | | 189 | " | | | GND | | | | | | " | | | | | | OUT | | | " | " | $\overline{2G}$ to $\overline{3Y}$ | " | " | " | " | " | " | " |
| | | 190 | " | | | | GND | | | | | " | | | | | OUT | | | | " | " | $\overline{2G}$ to $\overline{4Y}$ | " | " | " | " | " | " | " |
| | | 191 | " | | | | | GND | | | | " | | | | OUT | | | | | " | " | $\overline{2G}$ to $\overline{5Y}$ | " | " | " | " | " | " | " |
| | | 192 | " | | | | | | GND | | | " | | | OUT | | | | | | " | " | $\overline{2G}$ to $\overline{6Y}$ | " | " | " | " | " | " | " |
| | | 193 | " | | | | | | | GND | | " | | OUT | | | | | | | " | " | $\overline{2G}$ to $\overline{7Y}$ | " | " | " | " | " | " | " |
| | | 194 | " | | | | | | | | GND | " | OUT | | | | | | | | " | " | 2G to $\overline{8Y}$ | " | " | " | " | " | " | " |
| $t_{TLH}$ | 3004 (Fig. 3) | 195 | " | IN | | | | | | | | " | | | | | | | | OUT | GND | " | $\overline{1Y}$ | 2 | 12 | 2 | 16 | 2 | 12 | " |
| | | 196 | " | | IN | | | | | | | " | | | | | | | OUT | | " | " | $\overline{2Y}$ | " | " | " | " | " | " | " |
| | | 197 | " | | | IN | | | | | | " | | | | | | OUT | | | " | " | $\overline{3Y}$ | " | " | " | " | " | " | " |
| | | 198 | " | | | | IN | | | | | " | | | | | OUT | | | | " | " | $\overline{4Y}$ | " | " | " | " | " | " | " |
| | | 199 | " | | | | | IN | | | | " | | | | OUT | | | | | " | " | $\overline{5Y}$ | " | " | " | " | " | " | " |
| | | 200 | " | | | | | | IN | | | " | | | OUT | | | | | | " | " | $\overline{6Y}$ | " | " | " | " | " | " | " |
| | | 201 | " | | | | | | | IN | | " | | OUT | | | | | | | " | " | $\overline{7Y}$ | " | " | " | " | " | " | " |
| | | 202 | " | | | | | | | | IN | " | OUT | | | | | | | | " | " | $\overline{8Y}$ | " | " | " | " | " | " | " |
| $t_{THL}$ | 3004 (Fig. 3) | 203 | " | IN | | | | | | | | " | | | | | | | | OUT | " | " | $\overline{1Y}$ | " | " | " | " | " | " | " |
| | | 204 | " | | IN | | | | | | | " | | | | | | | OUT | | " | " | $\overline{2Y}$ | " | " | " | " | " | " | " |
| | | 205 | " | | | IN | | | | | | " | | | | | | OUT | | | " | " | $\overline{3Y}$ | " | " | " | " | " | " | " |
| | | 206 | " | | | | IN | | | | | " | | | | | OUT | | | | " | " | $\overline{4Y}$ | " | " | " | " | " | " | " |
| | | 207 | " | | | | | IN | | | | " | | | | OUT | | | | | " | " | $\overline{5Y}$ | " | " | " | " | " | " | " |
| | | 208 | " | | | | | | IN | | | " | | | OUT | | | | | | " | " | $\overline{6Y}$ | " | " | " | " | " | " | " |
| | | 209 | " | | | | | | | IN | | " | | OUT | | | | | | | " | " | $\overline{7Y}$ | " | " | " | " | " | " | " |
| | | 210 | " | | | | | | | | IN | " | OUT | | | | | | | | " | " | $\overline{8Y}$ | " | " | " | " | " | " | " |

See footnotes at end of table.

TABLE III. Group A inspection for device type 11.

| Symbol | MIL-STD-883 method | Cases R, S, X, and 2 | Terminal conditions 1/ | | | | | | | | | | | | | | | | | | | | Measured terminal | Test limits | | | | | | Unit |
|---|---|---|---|---|---|---|---|---|---|---|---|---|---|---|---|---|---|---|---|---|---|---|---|---|---|---|---|---|---|---|
| | | | 1 | 2 | 3 | 4 | 5 | 6 | 7 | 8 | 9 | 10 | 11 | 12 | 13 | 14 | 15 | 16 | 17 | 18 | 19 | 20 | | Subgroup 1 $T_C$ = +25°C | | Subgroup 2 $T_C$ = +125°C | | Subgroup 3 $T_C$ = -55°C | | |
| | | Test no. | $\overline{1G}$ | 1A | 2A | 3A | 4A | 5A | 6A | 7A | 8A | GND | 8Y | 7Y | 6Y | 5Y | 4Y | 3Y | 2Y | 1Y | $\overline{2G}$ | $V_{CC}$ | | Min | Max | Min | Max | Min | Max | |
| $V_{IC}$ (pos) | | 1 | 1mA | | | | | | | | | OPEN | | | | | | | | | | GND | $\overline{1G}$ | 1/ | 1.5 | | | | | V |
| | | 2 | | 1mA | | | | | | | | " | | | | | | | | | | " | 1A | " | " | | | | | " |
| | | 3 | | | 1mA | | | | | | | " | | | | | | | | | | " | 2A | " | " | | | | | " |
| | | 4 | | | | 1mA | | | | | | " | | | | | | | | | | " | 3A | " | " | | | | | " |
| | | 5 | | | | | 1mA | | | | | " | | | | | | | | | | " | 4A | " | " | | | | | " |
| | | 6 | | | | | | 1mA | | | | " | | | | | | | | | | " | 5A | " | " | | | | | " |
| | | 7 | | | | | | | 1mA | | | " | | | | | | | | | | " | 6A | " | " | | | | | " |
| | | 8 | | | | | | | | 1mA | | " | | | | | | | | | | " | 7A | " | " | | | | | " |
| | | 9 | | | | | | | | | 1mA | " | | | | | | | | | | " | 8A | " | " | | | | | " |
| | | 10 | | | | | | | | | | " | | | | | | | | | 1mA | " | $\overline{2G}$ | " | " | | | | | " |
| $V_{IC}$ (neg) | | 11 | -1mA | | | | | | | | | GND | | | | | | | | | | OPEN | $\overline{1G}$ | | 1.5 | | | | | " |
| | | 12 | | -1mA | | | | | | | | " | | | | | | | | | | " | 1A | | " | | | | | " |
| | | 13 | | | -1mA | | | | | | | " | | | | | | | | | | " | 2A | | " | | | | | " |
| | | 14 | | | | -1mA | | | | | | " | | | | | | | | | | " | 3A | | " | | | | | " |
| | | 15 | | | | | -1mA | | | | | " | | | | | | | | | | " | 4A | | " | | | | | " |
| | | 16 | | | | | | -1mA | | | | " | | | | | | | | | | " | 5A | | " | | | | | " |
| | | 17 | | | | | | | -1mA | | | " | | | | | | | | | | " | 6A | | " | | | | | " |
| | | 18 | | | | | | | | -1mA | | " | | | | | | | | | | " | 7A | | " | | | | | " |
| | | 19 | | | | | | | | | -1mA | " | | | | | | | | | | " | 8A | | " | | | | | " |
| | | 20 | | | | | | | | | | " | | | | | | | | | -1mA | " | $\overline{2G}$ | | " | | | | | " |
| $I_{CCH}$ | 3005 | 21 | GND | 6V | 6V | 6V | 6V | 6V | 6V | 6V | 6V | " | | | | | | | | | | GND | $V_{CC}$ | | 0.2 | | 20 | | | μA |
| $I_{CCL}$ | 3005 | 22 | GND | GND | GND | GND | GND | GND | GND | GND | GND | " | | | | | | | | | " | " | " | | 0.2 | | 20 | | | " |
| $I_{CCZ}$ | | 23 | 6V | GND | GND | GND | GND | 6V | 6V | 6V | 6V | " | | | | | | | | | " | " | " | | 0.1 | | 10 | | | " |
| | | 24 | GND | 6V | 6V | 6V | 6V | GND | GND | GND | GND | " | | | | | | | | | 6V | " | " | | 0.1 | | 10 | | | " |
| $V_{OH3}$ | 3006 | 25 | 1.2V | 4.2V | | | | | | | | " | | | | | | | | -20μA | 1.2V | " | 1Y | 5.95 | | 5.95 | | 5.95 | | V |
| | | 26 | " | | 4.2V | | | | | | | " | | | | | | | -20μA | | " | " | 2Y | " | | " | | " | | " |
| | | 27 | " | | | 4.2V | | | | | | " | | | | | | -20μA | | | " | " | 3Y | " | | " | | " | | " |
| | | 28 | " | | | | 4.2V | | | | | " | | | | | -20μA | | | | " | " | 4Y | " | | " | | " | | " |
| | | 29 | " | | | | | 4.2V | | | | " | | | | -20μA | | | | | " | " | 5Y | " | | " | | " | | " |
| | | 30 | " | | | | | | 4.2V | | | " | | | -20μA | | | | | | " | " | 6Y | " | | " | | " | | " |
| | | 31 | " | | | | | | | 4.2V | | " | | -20μA | | | | | | | " | " | 7Y | " | | " | | " | | " |
| | | 32 | " | | | | | | | | 4.2V | " | -20μA | | | | | | | | " | " | 8Y | " | | " | | " | | " |
| $V_{OH5}$ | 3006 | 33 | " | 4.2V | | | | | | | | " | | | | | | | | -7.8mA | 1.2V | " | 1Y | 5.48 | | 5.2 | | 5.48 | | " |
| | | 34 | " | | 4.2V | | | | | | | " | | | | | | | -7.8mA | | " | " | 2Y | " | | " | | " | | " |
| | | 35 | " | | | 4.2V | | | | | | " | | | | | | -7.8mA | | | " | " | 3Y | " | | " | | " | | " |
| | | 36 | " | | | | 4.2V | | | | | " | | | | | -7.8mA | | | | " | " | 4Y | " | | " | | " | | " |
| | | 37 | " | | | | | 4.2V | | | | " | | | | -7.8mA | | | | | " | " | 5Y | " | | " | | " | | " |
| | | 38 | " | | | | | | 4.2V | | | " | | | -7.8mA | | | | | | " | " | 6Y | " | | " | | " | | " |
| | | 39 | " | | | | | | | 4.2V | | " | | -7.8mA | | | | | | | " | " | 7Y | " | | " | | " | | " |
| | | 40 | " | | | | | | | | 4.2V | " | -7.8mA | | | | | | | | " | " | 8Y | " | | " | | " | | " |
| $V_{OL3}$ | 3007 | 41 | " | 1.2V | | | | | | | | " | | | | | | | | 20μA | 1.2V | " | 1Y | | 0.05 | | 0.05 | | 0.05 | " |
| | | 42 | " | | 1.2V | | | | | | | " | | | | | | | 20μA | | " | " | 2Y | | " | | " | | " | " |
| | | 43 | " | | | 1.2V | | | | | | " | | | | | | 20μA | | | " | " | 3Y | | " | | " | | " | " |
| | | 44 | " | | | | 1.2V | | | | | " | | | | | 20μA | | | | " | " | 4Y | | " | | " | | " | " |
| | | 45 | " | | | | | 1.2V | | | | " | | | | 20μA | | | | | " | " | 5Y | | " | | " | | " | " |
| | | 46 | " | | | | | | 1.2V | | | " | | | 20μA | | | | | | " | " | 6Y | | " | | " | | " | " |
| | | 47 | " | | | | | | | 1.2V | | " | | 20μA | | | | | | | " | " | 7Y | | " | | " | | " | " |
| | | 48 | " | | | | | | | | 1.2V | " | 20μA | | | | | | | | " | " | 8Y | | " | | " | | " | " |
| $V_{OL5}$ | 3007 | 49 | " | 1.2V | | | | | | | | " | | | | | | | | 7.8mA | " | " | 1Y | | 0.26 | | 0.4 | | 0.26 | " |
| | | 50 | " | | 1.2V | | | | | | | " | | | | | | | 7.8mA | | " | " | 2Y | | " | | " | | " | " |
| | | 51 | " | | | 1.2V | | | | | | " | | | | | | 7.8mA | | | " | " | 3Y | | " | | " | | " | " |
| | | 52 | " | | | | 1.2V | | | | | " | | | | | 7.8mA | | | | " | " | 4Y | | " | | " | | " | " |
| | | 53 | " | | | | | 1.2V | | | | " | | | | 7.8mA | | | | | " | " | 5Y | | " | | " | | " | " |
| | | 54 | " | | | | | | 1.2V | | | " | | | 7.8mA | | | | | | " | " | 6Y | | " | | " | | " | " |
| | | 55 | " | | | | | | | 1.2V | | " | | 7.8mA | | | | | | | " | " | 7Y | | " | | " | | " | " |
| | | 56 | " | | | | | | | | 1.2V | " | 7.8mA | | | | | | | | " | " | 8Y | | " | | " | | " | " |
| $I_{OZH}$ | | 57 | 0.8V | 9/ | | | | | | | | " | | | | | | | | 6V | 9/ | " | 1Y | | 0.2 | | 2.0 | | | μA |
| | | 58 | " | | 9/ | | | | | | | " | | | | | | | 6V | | " | " | 2Y | | " | | " | | | " |
| | | 59 | " | | | 9/ | | | | | | " | | | | | | 6V | | | " | " | 3Y | | " | | " | | | " |
| | | 60 | " | | | | 9/ | | | | | " | | | | | 6V | | | | " | " | 4Y | | " | | " | | | " |
| | | 61 | " | | | | | 9/ | | | | " | | | | 6V | | | | | " | " | 5Y | | " | | " | | | " |
| | | 62 | " | | | | | | 9/ | | | " | | | 6V | | | | | | " | " | 6Y | | " | | " | | | " |
| | | 63 | " | | | | | | | 9/ | | " | | 6V | | | | | | | " | " | 7Y | | " | | " | | | " |
| | | 64 | " | | | | | | | | 9/ | " | 6V | | | | | | | | " | " | 8Y | | " | | " | | | " |

See footnotes at end of table.

TABLE III. Group A inspection for device type 11 – Continued.

| Symbol | MIL-STD-883 method | Cases R, S, X, and 2 | Terminal conditions 1/ | | | | | | | | | | | | | | | | | | | | Measured terminal | Test limits | | | | | | Unit |
|---|---|---|---|---|---|---|---|---|---|---|---|---|---|---|---|---|---|---|---|---|---|---|---|---|---|---|---|---|---|---|
| | | | 1 | 2 | 3 | 4 | 5 | 6 | 7 | 8 | 9 | 10 | 11 | 12 | 13 | 14 | 15 | 16 | 17 | 18 | 19 | 20 | | Subgroup 1 $T_C$ = +25°C | | Subgroup 2 $T_C$ = +125°C | | Subgroup 3 $T_C$ = -55°C | | |
| | | Test no. | $\overline{1G}$ | 1A | 2A | 3A | 4A | 5A | 6A | 7A | 8A | GND | 8Y | 7Y | 6Y | 5Y | 4Y | 3Y | 2Y | 1Y | $\overline{2G}$ | $V_{CC}$ | | Min | Max | Min | Max | Min | Max | |
| $I_{OZL}$ | | 65 | 9/ | 9/ | | | | | | | | GND | | | | | | | | GND | 0.8V | 6V | 1Y | | -0.2 | | -2.0 | | | µA |
| | | 66 | " | | 9/ | | | | | | | " | | | | | | | GND | | " | " | 2Y | | " | | " | | | " |
| | | 67 | " | | | 9/ | | | | | | " | | | | | | GND | | | " | " | 3Y | | " | | " | | | " |
| | | 68 | " | | | | 9/ | | | | | " | | | | | GND | | | | " | " | 4Y | | " | | " | | | " |
| | | 69 | " | | | | | 9/ | | | | " | | | | GND | | | | | " | " | 5Y | | " | | " | | | " |
| | | 70 | " | | | | | | 9/ | | | " | | | GND | | | | | | " | " | 6Y | | " | | " | | | " |
| | | 71 | " | | | | | | | 9/ | | " | | GND | | | | | | | " | " | 7Y | | " | | " | | | " |
| | | 72 | " | | | | | | | | 9/ | " | GND | | | | | | | | " | " | 8Y | | " | | " | | | " |
| $I_{IH}$ | 3010 | 73 | 6V | GND | GND | GND | GND | GND | GND | GND | GND | " | | | | | | | | | GND | 6V | $\overline{1G}$ | | .05 | | 0.1 | | | " |
| | | 74 | GND | 6V | " | " | " | " | " | " | " | " | | | | | | | | | " | " | 1A | | " | | " | | | " |
| | | 75 | " | GND | 6V | " | " | " | " | " | " | " | | | | | | | | | " | " | 2A | | " | | " | | | " |
| | | 76 | " | " | GND | 6V | " | " | " | " | " | " | | | | | | | | | " | " | 3A | | " | | " | | | " |
| | | 77 | " | " | " | GND | 6V | " | " | " | " | " | | | | | | | | | " | " | 4A | | " | | " | | | " |
| | | 78 | " | " | " | " | GND | 6V | " | " | " | " | | | | | | | | | " | " | 5A | | " | | " | | | " |
| | | 79 | " | " | " | " | " | GND | 6V | " | " | " | | | | | | | | | " | " | 6A | | " | | " | | | " |
| | | 80 | " | " | " | " | " | " | GND | 6V | " | " | | | | | | | | | " | " | 7A | | " | | " | | | " |
| | | 81 | " | " | " | " | " | " | " | GND | 6V | " | | | | | | | | | " | " | 8A | | " | | " | | | " |
| | | 82 | " | " | " | " | " | " | " | GND | GND | " | | | | | | | | | 6V | " | $\overline{2G}$ | | " | | " | | | " |
| $I_{IL}$ | 3009 | 83 | GND | 6V | 6V | 6V | 6V | 6V | 6V | 6V | 6V | " | | | | | | | | | " | " | $\overline{1G}$ | | -.05 | | -0.1 | | | " |
| | | 84 | 6V | GND | " | " | " | " | " | " | " | " | | | | | | | | | " | " | 1A | | " | | " | | | " |
| | | 85 | " | 6V | GND | " | " | " | " | " | " | " | | | | | | | | | " | " | 2A | | " | | " | | | " |
| | | 86 | " | " | 6V | GND | " | " | " | " | " | " | | | | | | | | | " | " | 3A | | " | | " | | | " |
| | | 87 | " | " | " | 6V | GND | " | " | " | " | " | | | | | | | | | " | " | 4A | | " | | " | | | " |
| | | 88 | " | " | " | " | 6V | GND | " | " | " | " | | | | | | | | | " | " | 5A | | " | | " | | | " |
| | | 89 | " | " | " | " | " | 6V | GND | " | " | " | | | | | | | | | " | " | 6A | | " | | " | | | " |
| | | 90 | " | " | " | " | " | " | 6V | GND | " | " | | | | | | | | | " | " | 7A | | " | | " | | | " |
| | | 91 | " | " | " | " | " | " | " | 6V | GND | " | | | | | | | | | " | " | 8A | | " | | " | | | " |
| | | 92 | " | " | " | " | " | " | " | 6V | 6V | " | | | | | | | | | GND | " | $\overline{2G}$ | | " | | " | | | " |
| $I_{OS4}$ | 3011 | 93 | GND | 4V | | | | | | | | GND | | | | | | | | GND | GND | 4V | 1Y | -10 | -135 | -10 | -135 | -10 | -135 | mA |
| | | 94 | " | | 4V | | | | | | | " | | | | | | | GND | | " | " | 2Y | " | " | " | " | " | " | " |
| | | 95 | " | | | 4V | | | | | | " | | | | | | GND | | | " | " | 3Y | " | " | " | " | " | " | " |
| | | 96 | " | | | | 4V | | | | | " | | | | | GND | | | | " | " | 4Y | " | " | " | " | " | " | " |
| | | 97 | " | | | | | 4V | | | | " | | | | GND | | | | | " | " | 5Y | " | " | " | " | " | " | " |
| | | 98 | " | | | | | | 4V | | | " | | | GND | | | | | | " | " | 6Y | " | " | " | " | " | " | " |
| | | 99 | " | | | | | | | 4V | | " | | GND | | | | | | | " | " | 7Y | " | " | " | " | " | " | " |
| | | 100 | " | | | | | | | | 4V | " | GND | | | | | | | | " | " | 8Y | " | " | " | " | " | " | " |
| | | | | | | | | | | | | | | | | | | | | | | | | Subgroup 4 $T_C$ = +25°C | | | | | | |
| | | | | | | | | | | | | | | | | | | | | | | | | Min | Max | | | | | |
| $C_i$ | 3012 | 101 | 2/ | | | | | | | | | GND | | | | | | | | | | GND | $\overline{1G}$ | | 10 | | | | | pF |
| | | 102 | | 2/ | | | | | | | | " | | | | | | | | | | " | 1A | | " | | | | | " |
| | | 103 | | | 2/ | | | | | | | " | | | | | | | | | | " | 2A | | " | | | | | " |
| | | 104 | | | | 2/ | | | | | | " | | | | | | | | | | " | 3A | | " | | | | | " |
| | | 105 | | | | | 2/ | | | | | " | | | | | | | | | | " | 4A | | " | | | | | " |
| | | 106 | | | | | | 2/ | | | | " | | | | | | | | | | " | 5A | | " | | | | | " |
| | | 107 | | | | | | | 2/ | | | " | | | | | | | | | | " | 6A | | " | | | | | " |
| | | 108 | | | | | | | | 2/ | | " | | | | | | | | | | " | 7A | | " | | | | | " |
| | | 109 | | | | | | | | | 2/ | " | | | | | | | | | | " | 8A | | " | | | | | " |
| | | 110 | | | | | | | | | | " | | | | | | | | | 2/ | " | $\overline{2G}$ | | " | | | | | " |
| $C_o$ | 3012 | 111 | GND | | | | | | | | | " | | | | | 2/ | 2/ | 2/ | 2/ | 6V | 6V | Y's | | 20 | | | | | " |
| | | 112 | 6V | | | | | | | | | " | 2/ | 2/ | 2/ | 2/ | | | | | GND | 6V | Y's | | 20 | | | | | " |
| | | | | | | | | | | | | | | | | | | | | | | | | Subgroup 7 $T_C$ = +25°C | | Subgroup 8 $T_C$ = +125°C | | Subgroup 8 $T_C$ = -55°C | | |
| | | | | | | | | | | | | | | | | | | | | | | | | Min | Max | Min | Max | Min | Max | |
| Truth table 6/ | | 113 | B | A | A | A | A | A | A | A | A | GND | H | H | H | H | H | H | H | H | B | 4.5V | 7/ | | | | | | | |
| | | 114 | B | B | B | B | B | B | B | B | B | " | L | L | L | L | L | L | L | L | B | 4.5V | 7/ | | | | | | | |

See footnotes at end of table.

TABLE III. Group A inspection for device type 11 – Continued.

| Symbol | MIL-STD-883 method | Cases R, S, X, and 2 | Terminal conditions 1/ | | | | | | | | | | | | | | | | | | | | Measured terminal | Test limits | | | | | | Unit |
|---|---|---|---|---|---|---|---|---|---|---|---|---|---|---|---|---|---|---|---|---|---|---|---|---|---|---|---|---|---|---|
| | | | 1 | 2 | 3 | 4 | 5 | 6 | 7 | 8 | 9 | 10 | 11 | 12 | 13 | 14 | 15 | 16 | 17 | 18 | 19 | 20 | | Subgroup 9 $T_C$ = +25°C | | Subgroup 10 $T_C$ =+125°C | | Subgroup 11 $T_C$ = -55°C | | |
| | | Test no. | $\overline{1G}$ | 1A | 2A | 3A | 4A | 5A | 6A | 7A | 8A | GND | 8Y | 7Y | 6Y | 5Y | 4Y | 3Y | 2Y | 1Y | $\overline{2G}$ | $V_{CC}$ | | Min | Max | Min | Max | Min | Max | |
| $t_{PHL}$ | 3003 (Fig. 3) | 115 | GND | IN | | | | | | | | GND | | | | | | | | OUT | GND | 4.5V | 1A to 1Y | 8 | 22 | 8 | 29 | 8 | 22 | ns |
| | | 116 | " | | IN | | | | | | | " | | | | | | | OUT | | " | " | 2A to 2Y | " | " | " | " | " | " | " |
| | | 117 | " | | | IN | | | | | | " | | | | | | OUT | | | " | " | 3A to 3Y | " | " | " | " | " | " | " |
| | | 118 | " | | | | IN | | | | | " | | | | | OUT | | | | " | " | 4A to 4Y | " | " | " | " | " | " | " |
| | | 119 | " | | | | | IN | | | | " | | | | OUT | | | | | " | " | 5A to 5Y | " | " | " | " | " | " | " |
| | | 120 | " | | | | | | IN | | | " | | | OUT | | | | | | " | " | 6A to 6Y | " | " | " | " | " | " | " |
| | | 121 | " | | | | | | | IN | | " | | OUT | | | | | | | " | " | 7A to 7Y | " | " | " | " | " | " | " |
| | | 122 | " | | | | | | | | IN | " | OUT | | | | | | | | " | " | 8A to 8Y | " | " | " | " | " | " | " |
| $t_{PLH}$ | 3003 (Fig. 3) | 123 | " | IN | | | | | | | | " | | | | | | | | OUT | " | " | 1A to 1Y | " | " | " | " | " | " | " |
| | | 124 | " | | IN | | | | | | | " | | | | | | | OUT | | " | " | 2A to 2Y | " | " | " | " | " | " | " |
| | | 125 | " | | | IN | | | | | | " | | | | | | OUT | | | " | " | 3A to 3Y | " | " | " | " | " | " | " |
| | | 126 | " | | | | IN | | | | | " | | | | | OUT | | | | " | " | 4A to 4Y | " | " | " | " | " | " | " |
| | | 127 | " | | | | | IN | | | | " | | | | OUT | | | | | " | " | 5A to 5Y | " | " | " | " | " | " | " |
| | | 128 | " | | | | | | IN | | | " | | | OUT | | | | | | " | " | 6A to 6Y | " | " | " | " | " | " | " |
| | | 129 | " | | | | | | | IN | | " | | OUT | | | | | | | " | " | 7A to 7Y | " | " | " | " | " | " | " |
| | | 130 | " | | | | | | | | IN | " | OUT | | | | | | | | " | " | 8A to 8Y | " | " | " | " | " | " | " |
| $t_{PZH}$ | 3003 (Fig. 3) | 131 | IN | 4.5V | | | | | | | | GND | | | | | | | | OUT | GND | 4.5V | $\overline{1G}$ to 1Y | 8 | 31 | 8 | 41 | 8 | 31 | ns |
| | | 132 | " | | 4.5V | | | | | | | " | | | | | | | OUT | | " | " | $\overline{1G}$ to 2Y | " | " | " | " | " | " | " |
| | | 133 | " | | | 4.5V | | | | | | " | | | | | | OUT | | | " | " | $\overline{1G}$ to 3Y | " | " | " | " | " | " | " |
| | | 134 | " | | | | 4.5V | | | | | " | | | | | OUT | | | | " | " | $\overline{1G}$ to 4Y | " | " | " | " | " | " | " |
| | | 135 | " | | | | | 4.5V | | | | " | | | | OUT | | | | | " | " | $\overline{1G}$ to 5Y | " | " | " | " | " | " | " |
| | | 136 | " | | | | | | 4.5V | | | " | | | OUT | | | | | | " | " | $\overline{1G}$ to 6Y | " | " | " | " | " | " | " |
| | | 137 | " | | | | | | | 4.5V | | " | | OUT | | | | | | | " | " | $\overline{1G}$ to 7Y | " | " | " | " | " | " | " |
| | | 138 | " | | | | | | | | 4.5V | " | OUT | | | | | | | | " | " | $\overline{1G}$ to 8Y | " | " | " | " | " | " | " |
| | | 139 | GND | 4.5V | | | | | | | | " | | | | | | | | OUT | IN | " | $\overline{2G}$ to 1Y | " | " | " | " | " | " | " |
| | | 140 | " | | 4.5V | | | | | | | " | | | | | | | OUT | | " | " | $\overline{2G}$ to 2Y | " | " | " | " | " | " | " |
| | | 141 | " | | | 4.5V | | | | | | " | | | | | | OUT | | | " | " | $\overline{2G}$ to 3Y | " | " | " | " | " | " | " |
| | | 142 | " | | | | 4.5V | | | | | " | | | | | OUT | | | | " | " | $\overline{2G}$ to 4Y | " | " | " | " | " | " | " |
| | | 143 | " | | | | | 4.5V | | | | " | | | | OUT | | | | | " | " | $\overline{2G}$ to 5Y | " | " | " | " | " | " | " |
| | | 144 | " | | | | | | 4.5V | | | " | | | OUT | | | | | | " | " | $\overline{2G}$ to 6Y | " | " | " | " | " | " | " |
| | | 145 | " | | | | | | | 4.5V | | " | | OUT | | | | | | | " | " | $\overline{2G}$ to 7Y | " | " | " | " | " | " | " |
| | | 146 | " | | | | | | | | 4.5V | " | OUT | | | | | | | | " | " | $\overline{2G}$ to 8Y | " | " | " | " | " | " | " |
| $t_{PZL}$ | 3003 (Fig. 3) | 147 | IN | GND | | | | | | | | " | | | | | | | | OUT | GND | " | $\overline{1G}$ to 1Y | " | " | " | " | " | " | " |
| | | 148 | " | | GND | | | | | | | " | | | | | | | OUT | | " | " | $\overline{1G}$ to 2Y | " | " | " | " | " | " | " |
| | | 149 | " | | | GND | | | | | | " | | | | | | OUT | | | " | " | $\overline{1G}$ to 3Y | " | " | " | " | " | " | " |
| | | 150 | " | | | | GND | | | | | " | | | | | OUT | | | | " | " | $\overline{1G}$ to 4Y | " | " | " | " | " | " | " |
| | | 151 | " | | | | | GND | | | | " | | | | OUT | | | | | " | " | $\overline{1G}$ to 5Y | " | " | " | " | " | " | " |
| | | 152 | " | | | | | | GND | | | " | | | OUT | | | | | | " | " | $\overline{1G}$ to 6Y | " | " | " | " | " | " | " |
| | | 153 | " | | | | | | | GND | | " | | OUT | | | | | | | " | " | $\overline{1G}$ to 7Y | " | " | " | " | " | " | " |
| | | 154 | " | | | | | | | | GND | " | OUT | | | | | | | | " | " | $\overline{1G}$ to 8Y | " | " | " | " | " | " | " |
| | | 155 | GND | GND | | | | | | | | " | | | | | | | | OUT | IN | " | $\overline{2G}$ to 1Y | " | " | " | " | " | " | " |
| | | 156 | " | | GND | | | | | | | " | | | | | | | OUT | | " | " | $\overline{2G}$ to 2Y | " | " | " | " | " | " | " |
| | | 157 | " | | | GND | | | | | | " | | | | | | OUT | | | " | " | $\overline{2G}$ to 3Y | " | " | " | " | " | " | " |
| | | 158 | " | | | | GND | | | | | " | | | | | OUT | | | | " | " | $\overline{2G}$ to 4Y | " | " | " | " | " | " | " |
| | | 159 | " | | | | | GND | | | | " | | | | OUT | | | | | " | " | $\overline{2G}$ to 5Y | " | " | " | " | " | " | " |
| | | 160 | " | | | | | | GND | | | " | | | OUT | | | | | | " | " | $\overline{2G}$ to 6Y | " | " | " | " | " | " | " |
| | | 161 | " | | | | | | | GND | | " | | OUT | | | | | | | " | " | $\overline{2G}$ to 7Y | " | " | " | " | " | " | " |
| | | 162 | " | | | | | | | | GND | " | OUT | | | | | | | | " | " | $\overline{2G}$ to 8Y | " | " | " | " | " | " | " |

See footnotes at end of table.

TABLE III. Group A inspection for device type 11 – Continued.

| Symbol | MIL-STD-883 method | Cases R, S, X, and 2 | Terminal conditions 1/ | | | | | | | | | | | | | | | | | | | | Measured terminal | Test limits | | | | | | Unit |
|---|---|---|---|---|---|---|---|---|---|---|---|---|---|---|---|---|---|---|---|---|---|---|---|---|---|---|---|---|---|---|
| | | | 1 | 2 | 3 | 4 | 5 | 6 | 7 | 8 | 9 | 10 | 11 | 12 | 13 | 14 | 15 | 16 | 17 | 18 | 19 | 20 | | Subgroup 9 $T_C$ = +25°C | | Subgroup 10 $T_C$ = +125°C | | Subgroup 11 $T_C$ = -55°C | | |
| | | Test no. | $\overline{1G}$ | 1A | 2A | 3A | 4A | 5A | 6A | 7A | 8A | GND | 8Y | 7Y | 6Y | 5Y | 4Y | 3Y | 2Y | 1Y | $\overline{2G}$ | $V_{CC}$ | | Min | Max | Min | Max | Min | Max | |
| $t_{PLZ}$ | 3003 (Fig. 3) | 163 | IN | GND | | | | | | | | GND | | | | | | | | OUT | GND | 4.5V | $\overline{1G}$ to 1Y | 8 | 31 | 8 | 41 | 8 | 31 | ns |
| | | 164 | " | | GND | | | | | | | " | | | | | | | OUT | | " | " | $\overline{1G}$ to 2Y | " | " | " | " | " | " | " |
| | | 165 | " | | | GND | | | | | | " | | | | | | OUT | | | " | " | $\overline{1G}$ to 3Y | " | " | " | " | " | " | " |
| | | 166 | " | | | | GND | | | | | " | | | | | OUT | | | | " | " | $\overline{1G}$ to 4Y | " | " | " | " | " | " | " |
| | | 167 | " | | | | | GND | | | | " | | | | OUT | | | | | " | " | $\overline{1G}$ to 5Y | " | " | " | " | " | " | " |
| | | 168 | " | | | | | | GND | | | " | | | OUT | | | | | | " | " | $\overline{1G}$ to 6Y | " | " | " | " | " | " | " |
| | | 169 | " | | | | | | | GND | | " | | OUT | | | | | | | " | " | $\overline{1G}$ to 7Y | " | " | " | " | " | " | " |
| | | 170 | " | | | | | | | | GND | " | OUT | | | | | | | | " | " | 1G to 8Y | " | " | " | " | " | " | " |
| | | 171 | GND | GND | | | | | | | | " | | | | | | | | OUT | IN | " | $\overline{2G}$ to 1Y | " | " | " | " | " | " | " |
| | | 172 | " | | GND | | | | | | | " | | | | | | | OUT | | " | " | $\overline{2G}$ to 2Y | " | " | " | " | " | " | " |
| | | 173 | " | | | GND | | | | | | " | | | | | | OUT | | | " | " | $\overline{2G}$ to 3Y | " | " | " | " | " | " | " |
| | | 174 | " | | | | GND | | | | | " | | | | | OUT | | | | " | " | $\overline{2G}$ to 4Y | " | " | " | " | " | " | " |
| | | 175 | " | | | | | GND | | | | " | | | | OUT | | | | | " | " | $\overline{2G}$ to 5Y | " | " | " | " | " | " | " |
| | | 176 | " | | | | | | GND | | | " | | | OUT | | | | | | " | " | $\overline{2G}$ to 6Y | " | " | " | " | " | " | " |
| | | 177 | " | | | | | | | GND | | " | | OUT | | | | | | | " | " | $\overline{2G}$ to 7Y | " | " | " | " | " | " | " |
| | | 178 | " | | | | | | | | GND | " | OUT | | | | | | | | " | " | $\overline{2G}$ to 8Y | " | " | " | " | " | " | " |
| $t_{PHZ}$ | 3003 (Fig. 3) | 179 | IN | 4.5V | | | | | | | | " | | | | | | | | OUT | GND | " | $\overline{1G}$ to 1Y | " | " | " | " | " | " | " |
| | | 180 | " | | 4.5V | | | | | | | " | | | | | | | OUT | | " | " | $\overline{1G}$ to 2Y | " | " | " | " | " | " | " |
| | | 181 | " | | | 4.5V | | | | | | " | | | | | | OUT | | | " | " | $\overline{1G}$ to 3Y | " | " | " | " | " | " | " |
| | | 182 | " | | | | 4.5V | | | | | " | | | | | OUT | | | | " | " | $\overline{1G}$ to 4Y | " | " | " | " | " | " | " |
| | | 183 | " | | | | | 4.5V | | | | " | | | | OUT | | | | | " | " | $\overline{1G}$ to 5Y | " | " | " | " | " | " | " |
| | | 184 | " | | | | | | 4.5V | | | " | | | OUT | | | | | | " | " | $\overline{1G}$ to 6Y | " | " | " | " | " | " | " |
| | | 185 | " | | | | | | | 4.5V | | " | | OUT | | | | | | | " | " | $\overline{1G}$ to 7Y | " | " | " | " | " | " | " |
| | | 186 | " | | | | | | | | 4.5V | " | OUT | | | | | | | | " | " | 1G to 8Y | " | " | " | " | " | " | " |
| | | 187 | GND | 4.5V | | | | | | | | " | | | | | | | | OUT | IN | " | $\overline{2G}$ to 1Y | " | " | " | " | " | " | " |
| | | 188 | " | | 4.5V | | | | | | | " | | | | | | | OUT | | " | " | $\overline{2G}$ to 2Y | " | " | " | " | " | " | " |
| | | 189 | " | | | 4.5V | | | | | | " | | | | | | OUT | | | " | " | $\overline{2G}$ to 3Y | " | " | " | " | " | " | " |
| | | 190 | " | | | | 4.5V | | | | | " | | | | | OUT | | | | " | " | $\overline{2G}$ to 4Y | " | " | " | " | " | " | " |
| | | 191 | " | | | | | 4.5V | | | | " | | | | OUT | | | | | " | " | $\overline{2G}$ to 5Y | " | " | " | " | " | " | " |
| | | 192 | " | | | | | | 4.5V | | | " | | | OUT | | | | | | " | " | $\overline{2G}$ to 6Y | " | " | " | " | " | " | " |
| | | 193 | " | | | | | | | 4.5V | | " | | OUT | | | | | | | " | " | $\overline{2G}$ to 7Y | " | " | " | " | " | " | " |
| | | 194 | " | | | | | | | | 4.5V | " | OUT | | | | | | | | " | " | $\overline{2G}$ to 8Y | " | " | " | " | " | " | " |
| $t_{TLH}$ | 3004 (Fig. 3) | 195 | " | IN | | | | | | | | " | | | | | | | | OUT | GND | " | 1Y | 2 | 12 | 2 | 16 | 2 | 12 | " |
| | | 196 | " | | IN | | | | | | | " | | | | | | | OUT | | " | " | 2Y | " | " | " | " | " | " | " |
| | | 197 | " | | | IN | | | | | | " | | | | | | OUT | | | " | " | 3Y | " | " | " | " | " | " | " |
| | | 198 | " | | | | IN | | | | | " | | | | | OUT | | | | " | " | 4Y | " | " | " | " | " | " | " |
| | | 199 | " | | | | | IN | | | | " | | | | OUT | | | | | " | " | 5Y | " | " | " | " | " | " | " |
| | | 200 | " | | | | | | IN | | | " | | | OUT | | | | | | " | " | 6Y | " | " | " | " | " | " | " |
| | | 201 | " | | | | | | | IN | | " | | OUT | | | | | | | " | " | 7Y | " | " | " | " | " | " | " |
| | | 202 | " | | | | | | | | IN | " | OUT | | | | | | | | " | " | 8Y | " | " | " | " | " | " | " |
| $t_{THL}$ | 3004 (Fig. 3) | 203 | " | IN | | | | | | | | " | | | | | | | | OUT | " | " | 1Y | " | " | " | " | " | " | " |
| | | 204 | " | | IN | | | | | | | " | | | | | | | OUT | | " | " | 2Y | " | " | " | " | " | " | " |
| | | 205 | " | | | IN | | | | | | " | | | | | | OUT | | | " | " | 3Y | " | " | " | " | " | " | " |
| | | 206 | " | | | | IN | | | | | " | | | | | OUT | | | | " | " | 4Y | " | " | " | " | " | " | " |
| | | 207 | " | | | | | IN | | | | " | | | | OUT | | | | | " | " | 5Y | " | " | " | " | " | " | " |
| | | 208 | " | | | | | | IN | | | " | | | OUT | | | | | | " | " | 6Y | " | " | " | " | " | " | " |
| | | 209 | " | | | | | | | IN | | " | | OUT | | | | | | | " | " | 7Y | " | " | " | " | " | " | " |
| | | 210 | " | | | | | | | | IN | " | OUT | | | | | | | | " | " | 8Y | " | " | " | " | " | " | " |

See footnotes at end of table.

TABLE III. Group A inspection for device type 51.

| Symbol | MIL-STD-883 method | Case | Terminal conditions 1/ | | | | | | | | | | | | | | Measured terminal | Test limits | | | | | | Unit |
|---|---|---|---|---|---|---|---|---|---|---|---|---|---|---|---|---|---|---|---|---|---|---|---|---|
| | | 2 | 2 | 3 | 4 | 6 | 8 | 9 | 10 | 12 | 13 | 14 | 16 | 18 | 19 | 20 | | Subgroup 1 $T_C$ = +25°C | | Subgroup 2 $T_C$ = +125°C | | Subgroup 3 $T_C$ = -55°C | | |
| | | C and D | 1 | 2 | 3 | 4 | 5 | 6 | 7 | 8 | 9 | 10 | 11 | 12 | 13 | 14 | | | | | | | | |
| | | Test no. | 1A | $\overline{1Y}$ | 2A | $\overline{2Y}$ | 3A | $\overline{3Y}$ | GND | $\overline{4Y}$ | 4A | $\overline{5Y}$ | 5A | $\overline{6Y}$ | 6A | $V_{CC}$ | | Min | Max | Min | Max | Min | Max | |
| $V_{IC}$ (pos) | | 1 | 1mA | | | | | | OPEN | | | | | | | GND | 1A | 1/ | 1.5 | | | | | V |
| | | 2 | | | 1mA | | | | " | | | | | | | " | 2A | " | " | | | | | " |
| | | 3 | | | | | 1mA | | " | | | | | | | " | 3A | " | " | | | | | " |
| | | 4 | | | | | | | " | | 1mA | | | | | " | 4A | " | " | | | | | " |
| | | 5 | | | | | | | " | | | | 1mA | | | " | 5A | " | " | | | | | " |
| | | 6 | | | | | | | " | | | | | | 1mA | " | 6A | " | " | | | | | " |
| $V_{IC}$ (neg) | | 7 | -1mA | | | | | | GND | | | | | | | OPEN | 1A | | " | | | | | V |
| | | 8 | | | -1mA | | | | " | | | | | | | " | 2A | | " | | | | | " |
| | | 9 | | | | | -1mA | | " | | | | | | | " | 3A | | " | | | | | " |
| | | 10 | | | | | | | " | | -1mA | | | | | " | 4A | | " | | | | | " |
| | | 11 | | | | | | | " | | | | -1mA | | | " | 5A | | " | | | | | " |
| | | 12 | | | | | | | " | | | | | | -1mA | " | 6A | | " | | | | | " |
| $I_{CC}$ | 3005 | 13 | GND | | GND | | GND | | " | | GND | | GND | | GND | 5.5V | $V_{CC}$ | | 0.1 | | 10 | | | µA |
| $I_{CC}$ | 3005 | 14 | 5.5V | | 5.5V | | 5.5V | | " | | 5.5V | | 5.5V | | 5.5V | 5.5V | $V_{CC}$ | | 0.1 | | 10 | | | µA |
| $I_{CC}\Delta$ | 3005 | 215 | 2.4V | | 0.4V | | 0.4V | | " | | 0.4V | | 0.4V | | 0.4V | 5.5V | $V_{CC}$ | | 3.0 | | 3.0 | | 3.0 | mA |
| | | 216 | 0.4V | | 2.4V | | " | | " | | " | | " | | " | " | " | | " | | " | | " | " |
| | | 217 | " | | 0.4V | | 2.4V | | " | | " | | " | | " | " | " | | " | | " | | " | " |
| | | 218 | " | | " | | 0.4V | | " | | 2.4V | | " | | " | " | " | | " | | " | | " | " |
| | | 219 | " | | " | | " | | " | | 0.4V | | 2.4V | | " | " | " | | " | | " | | " | " |
| | | 220 | " | | " | | " | | " | | " | | 0.4V | | 2.4V | " | " | | " | | " | | " | " |
| $V_{OH6}$ | 3006 | 16 | 0.8V | -20µA | | | | | " | | | | | | | 4.5V | 1Y | 4.4 | | 4.4 | | 4.4 | | V |
| | | 17 | | | 0.8V | -20µA | | | " | | | | | | | " | 2Y | " | | " | | " | | " |
| | | 18 | | | | | 0.8V | -20µA | " | | | | | | | " | 3Y | " | | " | | " | | " |
| | | 19 | | | | | | | " | -20µA | 0.8V | | | | | " | 4Y | " | | " | | " | | " |
| | | 20 | | | | | | | " | | | -20µA | 0.8V | | | " | 5Y | " | | " | | " | | " |
| | | 21 | | | | | | | " | | | | | -20µA | 0.8V | " | 6Y | " | | " | | " | | " |
| $V_{OH7}$ | 3006 | 22 | 0.8V | -4 mA | | | | | " | | | | | | | 5.5V | 1Y | 3.98 | | 3.7 | | 3.98 | | " |
| | | 23 | | | 0.8V | -4 mA | | | " | | | | | | | " | 2Y | " | | " | | " | | " |
| | | 24 | | | | | 0.8V | -4 mA | " | | | | | | | " | 3Y | " | | " | | " | | " |
| | | 25 | | | | | | | " | -4 mA | 0.8V | | | | | " | 4Y | " | | " | | " | | " |
| | | 26 | | | | | | | " | | | -4 mA | 0.8V | | | " | 5Y | " | | " | | " | | " |
| | | 27 | | | | | | | " | | | | | -4 mA | 0.8V | " | 6Y | " | | " | | " | | " |
| $V_{OL6}$ | 3007 | 28 | 2.0V | 20µA | | | | | " | | | | | | | 4.5V | 1Y | | 0.1 | | 0.1 | | 0.1 | " |
| | | 29 | | | 2.0V | 20µA | | | " | | | | | | | " | 2Y | | " | | " | | " | " |
| | | 30 | | | | | 2.0V | 20µA | " | | | | | | | " | 3Y | | " | | " | | " | " |
| | | 31 | | | | | | | " | 20µA | 2.0V | | | | | " | 4Y | | " | | " | | " | " |
| | | 32 | | | | | | | " | | | 20µA | 2.0V | | | " | 5Y | | " | | " | | " | " |
| | | 33 | | | | | | | " | | | | | 20µA | 2.0V | " | 6Y | | " | | " | | " | " |
| $V_{OL7}$ | 3007 | 34 | 2.0V | 4.0mA | | | | | " | | | | | | | 5.5V | 1Y | | 0.26 | | 0.4 | | 0.26 | " |
| | | 35 | | | 2.0V | 4.0mA | | | " | | | | | | | " | 2Y | | " | | " | | " | " |
| | | 36 | | | | | 2.0V | 4.0mA | " | | | | | | | " | 3Y | | " | | " | | " | " |
| | | 37 | | | | | | | " | 4.0mA | 2.0V | | | | | " | 4Y | | " | | " | | " | " |
| | | 38 | | | | | | | " | | | 4.0mA | 2.0V | | | " | 5Y | | " | | " | | " | " |
| | | 39 | | | | | | | " | | | | | 4.0mA | 2.0V | " | 6Y | | " | | " | | " | " |
| $I_{OS4}$ | 3011 | 40 | GND | GND | GND | | GND | | " | | GND | | GND | | GND | 4V | 1Y | -10 | -120 | -10 | -120 | -10 | -120 | mA |
| | | 41 | " | | " | GND | " | | " | | " | | " | | " | " | 2Y | " | " | " | " | " | " | " |
| | | 42 | " | | " | | " | GND | " | | " | | " | | " | " | 3Y | " | " | " | " | " | " | " |
| | | 43 | " | | " | | " | | " | GND | " | | " | | " | " | 4Y | " | " | " | " | " | " | " |
| | | 44 | " | | " | | " | | " | | " | GND | " | | " | " | 5Y | " | " | " | " | " | " | " |
| | | 45 | " | | " | | " | | " | | " | | " | GND | " | " | 6Y | " | " | " | " | " | " | " |
| $I_{IH}$ | 3010 | 46 | 5.5V | | GND | | GND | | " | | " | | " | | " | 5.5V | 1A | | .05 | | 0.1 | | | µA |
| | | 47 | GND | | 5.5V | | GND | | " | | " | | " | | " | " | 2A | | " | | " | | | " |
| | | 48 | " | | GND | | 5.5V | | " | | " | | " | | " | " | 3A | | " | | " | | | " |
| | | 49 | " | | " | | GND | | " | | 5.5V | | " | | " | " | 4A | | " | | " | | | " |
| | | 50 | " | | " | | " | | " | | GND | | 5.5V | | GND | " | 5A | | " | | " | | | " |
| | | 51 | " | | " | | " | | " | | GND | | GND | | 5.5V | " | 6A | | " | | " | | | " |

See footnotes at end of table.

TABLE III. Group A inspection for device type 51 – Continued.

| Symbol | MIL-STD-883 method | Case | Terminal conditions 1/ | | | | | | | | | | | | | | Measured terminal | Test limits | | | | | | Unit |
|---|---|---|---|---|---|---|---|---|---|---|---|---|---|---|---|---|---|---|---|---|---|---|---|---|
| | | 2 | 2 | 3 | 4 | 6 | 8 | 9 | 10 | 12 | 13 | 14 | 16 | 18 | 19 | 20 | | Subgroup 1 $T_C$ = +25°C | | Subgroup 2 $T_C$ = +125°C | | Subgroup 3 $T_C$ = -55°C | | |
| | | C and D | 1 | 2 | 3 | 4 | 5 | 6 | 7 | 8 | 9 | 10 | 11 | 12 | 13 | 14 | | | | | | | | |
| | | Test no. | 1A | $\overline{1Y}$ | 2A | $\overline{2Y}$ | 3A | $\overline{3Y}$ | GND | $\overline{4Y}$ | 4A | $\overline{5Y}$ | 5A | $\overline{6Y}$ | 6A | $V_{CC}$ | | Min | Max | Min | Max | Min | Max | |
| $I_{IL}$ | 3009 | 52 | GND | | 5.5V | | 5.5V | | GND | | 5.5V | | 5.5V | | 5.5V | 5.5V | 1A | | -.05 | | -0.1 | | | µA |
| | | 53 | 5.5V | | GND | | 5.5V | | " | | " | | " | | " | " | 2A | | " | | " | | | " |
| | | 54 | " | | 5.5V | | GND | | " | | " | | " | | " | " | 3A | | " | | " | | | " |
| | | 55 | " | | " | | 5.5V | | " | | GND | | " | | " | " | 4A | | " | | " | | | " |
| | | 56 | " | | " | | " | | " | | 5.5V | | GND | | " | " | 5A | | " | | " | | | " |
| | | 57 | " | | " | | " | | " | | 5.5V | | 5.5V | | GND | " | 6A | | " | | " | | | " |
| | | | | | | | | | | | | | | | | | | Subgroup 4 $T_C$ = +25°C | | | | | | |
| | | | | | | | | | | | | | | | | | | Min | Max | | | | | |
| $C_i$ | 3012 | 58 | 2/ | | | | | | " | | | | | | | GND | 1A | | 10 | | | | | pF |
| | | 59 | | | 2/ | | | | " | | | | | | | " | 2A | | " | | | | | " |
| | | 60 | | | | | 2/ | | " | | | | | | | " | 3A | | " | | | | | " |
| | | 61 | | | | | | | " | | 2/ | | | | | " | 4A | | " | | | | | " |
| | | 62 | | | | | | | " | | | | 2/ | | | " | 5A | | " | | | | | " |
| | | 63 | | | | | | | " | | | | | | 2/ | " | 6A | | " | | | | | " |
| | | | | | | | | | | | | | | | | | | Subgroup 9 $T_C$ = +25°C | | Subgroup 10 $T_C$ = +125°C | | Subgroup 11 $T_C$ = -55°C | | |
| | | | | | | | | | | | | | | | | | | Min | Max | Min | Max | Min | Max | |
| $t_{PHL}$ | 3003 (Fig. 3) | 64 | IN | OUT | | | | | GND | | | | | | | 4.5V | 1A to $\overline{1Y}$ | 4 | 18 | 4 | 23 | 4 | 18 | ns |
| | | 65 | | | IN | OUT | | | " | | | | | | | " | 2A to $\overline{2Y}$ | " | " | " | " | " | " | " |
| | | 66 | | | | | IN | OUT | " | | | | | | | " | 3A to $\overline{3Y}$ | " | " | " | " | " | " | " |
| | | 67 | | | | | | | " | OUT | IN | | | | | " | 4A to $\overline{4Y}$ | " | " | " | " | " | " | " |
| | | 68 | | | | | | | " | | | OUT | IN | | | " | 5A to $\overline{5Y}$ | " | " | " | " | " | " | " |
| | | 69 | | | | | | | " | | | | | OUT | IN | " | 6A to $\overline{6Y}$ | " | " | " | " | " | " | " |
| $t_{PLH}$ | 3003 (Fig. 3) | 70 | IN | OUT | | | | | " | | | | | | | " | 1A to $\overline{1Y}$ | " | " | " | " | " | " | " |
| | | 71 | | | IN | OUT | | | " | | | | | | | " | 2A to $\overline{2Y}$ | " | " | " | " | " | " | " |
| | | 72 | | | | | IN | OUT | " | | | | | | | " | 3A to $\overline{3Y}$ | " | " | " | " | " | " | " |
| | | 73 | | | | | | | " | OUT | IN | | | | | " | 4A to $\overline{4Y}$ | " | " | " | " | " | " | " |
| | | 74 | | | | | | | " | | | OUT | IN | | | " | 5A to $\overline{5Y}$ | " | " | " | " | " | " | " |
| | | 75 | | | | | | | " | | | | | OUT | IN | " | 6A to $\overline{6Y}$ | " | " | " | " | " | " | " |
| $t_{THL}$ | 3004 (Fig. 3) | 76 | IN | OUT | | | | | " | | | | | | | " | $\overline{1Y}$ | 3 | 15 | 3 | 20 | 3 | 15 | " |
| | | 77 | | | IN | OUT | | | " | | | | | | | " | $\overline{2Y}$ | " | " | " | " | " | " | " |
| | | 78 | | | | | IN | OUT | " | | | | | | | " | $\overline{3Y}$ | " | " | " | " | " | " | " |
| | | 79 | | | | | | | " | OUT | IN | | | | | " | $\overline{4Y}$ | " | " | " | " | " | " | " |
| | | 80 | | | | | | | " | | | OUT | IN | | | " | $\overline{5Y}$ | " | " | " | " | " | " | " |
| | | 81 | | | | | | | " | | | | | OUT | IN | " | $\overline{6Y}$ | " | " | " | " | " | " | " |
| $t_{TLH}$ | 3004 (Fig. 3) | 82 | IN | OUT | | | | | " | | | | | | | " | $\overline{1Y}$ | " | " | " | " | " | " | " |
| | | 83 | | | IN | OUT | | | " | | | | | | | " | $\overline{2Y}$ | " | " | " | " | " | " | " |
| | | 84 | | | | | IN | OUT | " | | | | | | | " | $\overline{3Y}$ | " | " | " | " | " | " | " |
| | | 85 | | | | | | | " | OUT | IN | | | | | " | $\overline{4Y}$ | " | " | " | " | " | " | " |
| | | 86 | | | | | | | " | | | OUT | IN | | | " | $\overline{5Y}$ | " | " | " | " | " | " | " |
| | | 87 | | | | | | | " | | | | | OUT | IN | " | $\overline{6Y}$ | " | " | " | " | " | " | " |

See footnotes at end of table.

TABLE III. Group A inspection for device type 52.

| Symbol | MIL-STD-883 method | Case | Terminal conditions 1/ | | | | | | | | | | | | | | Measured terminal | Test limits | | | | | | Unit |
|---|---|---|---|---|---|---|---|---|---|---|---|---|---|---|---|---|---|---|---|---|---|---|---|---|
| | | 2 | 2 | 3 | 4 | 6 | 8 | 9 | 10 | 12 | 13 | 14 | 16 | 18 | 19 | 20 | | Subgroup 1 $T_C$ = +25°C | | Subgroup 2 $T_C$ = +125°C | | Subgroup 3 $T_C$ = -55°C | | |
| | | C and D | 1 | 2 | 3 | 4 | 5 | 6 | 7 | 8 | 9 | 10 | 11 | 12 | 13 | 14 | | | | | | | | |
| | | Test no. | 1A | $\overline{1Y}$ | 2A | $\overline{2Y}$ | 3A | $\overline{3Y}$ | GND | $\overline{4Y}$ | 4A | $\overline{5Y}$ | 5A | $\overline{6Y}$ | 6A | $V_{CC}$ | | Min | Max | Min | Max | Min | Max | |
| $V_{IC}$ (pos) | | 1 | 1mA | | | | | | OPEN | | | | | | | GND | 1A | 1/ | 1.5 | | | | | V |
| | | 2 | | | 1mA | | | | " | | | | | | | " | 2A | " | " | | | | | " |
| | | 3 | | | | | 1mA | | " | | | | | | | " | 3A | " | " | | | | | " |
| | | 4 | | | | | | | " | | 1mA | | | | | " | 4A | " | " | | | | | " |
| | | 5 | | | | | | | " | | | | 1mA | | | " | 5A | " | " | | | | | " |
| | | 6 | | | | | | | " | | | | | | 1mA | " | 6A | " | " | | | | | " |
| $V_{IC}$ (neg) | | 7 | -1mA | | | | | | GND | | | | | | | OPEN | 1A | | -1.5 | | | | | V |
| | | 8 | | | -1mA | | | | " | | | | | | | " | 2A | | " | | | | | " |
| | | 9 | | | | | -1mA | | " | | | | | | | " | 3A | | " | | | | | " |
| | | 10 | | | | | | | " | | -1mA | | | | | " | 4A | | " | | | | | " |
| | | 11 | | | | | | | " | | | | -1mA | | | " | 5A | | " | | | | | " |
| | | 12 | | | | | | | " | | | | | | -1mA | " | 6A | | " | | | | | " |
| $I_{CC}$ | 3005 | 13 | GND | | GND | | GND | | " | | GND | | GND | | GND | 5.5V | $V_{CC}$ | | 0.1 | | 10 | | | µA |
| $I_{CC}$ | 3005 | 14 | 5.5V | | 5.5V | | 5.5V | | " | | 5.5V | | 5.5V | | 5.5V | 5.5V | $V_{CC}$ | | 0.1 | | 10 | | | µA |
| $I_{CC}\Delta$ | 3005 | 15 | 2.4V | | 0.8V | | 0.8V | | " | | 0.8V | | 0.8V | | 0.8V | 5.5V | $V_{CC}$ | | .490 | | 1.50 | | | mA |
| $V_{OH8}$ | 3006 | 16 | 0.5V | -20µA | | | | | " | | | | | | | 4.5V | $\overline{1Y}$ | 4.4 | | 4.4 | | 4.4 | | V |
| | | 17 | | | 0.5V | -20µA | | | " | | | | | | | " | $\overline{2Y}$ | " | | " | | " | | " |
| | | 18 | | | | | 0.5V | -20µA | " | | | | | | | " | $\overline{3Y}$ | " | | " | | " | | " |
| | | 19 | | | | | | | " | -20µA | 0.5V | | | | | " | $\overline{4Y}$ | " | | " | | " | | " |
| | | 20 | | | | | | | " | | | -20µA | 0.5V | | | " | $\overline{5Y}$ | " | | " | | " | | " |
| | | 21 | | | | | | | " | | | | | -20µA | 0.5V | " | $\overline{6Y}$ | " | | " | | " | | " |
| $V_{OH9}$ | 3006 | 22 | 0.6V | -4.0mA | | | | | " | | | | | | | 5.5V | $\overline{1Y}$ | 3.98 | | 3.7 | | 3.98 | | " |
| | | 23 | | | 0.6V | -4.0mA | | | " | | | | | | | " | $\overline{2Y}$ | " | | " | | " | | " |
| | | 24 | | | | | 0.6V | -4.0mA | " | | | | | | | " | $\overline{3Y}$ | " | | " | | " | | " |
| | | 25 | | | | | | | " | -4.0mA | 0.6V | | | | | " | $\overline{4Y}$ | " | | " | | " | | " |
| | | 26 | | | | | | | " | | | -4.0mA | 0.6V | | | " | $\overline{5Y}$ | " | | " | | " | | " |
| | | 27 | | | | | | | " | | | | | -4.0mA | 0.6V | " | $\overline{6Y}$ | " | | " | | " | | " |
| $V_{T-1}$ | 3006 | 28 | 3/ | OUT | | | | | " | | | | | | | 4.5V | $\overline{1Y}$ | 0.5 | 1.2 | 0.5 | 1.2 | 0.5 | 1.2 | " |
| | | 29 | | | 3/ | OUT | | | " | | | | | | | " | $\overline{2Y}$ | " | " | " | " | " | " | " |
| | | 30 | | | | | 3/ | OUT | " | | | | | | | " | $\overline{3Y}$ | " | " | " | " | " | " | " |
| | | 31 | | | | | | | " | OUT | 3/ | | | | | " | $\overline{4Y}$ | " | " | " | " | " | " | " |
| | | 32 | | | | | | | " | | | OUT | 3/ | | | " | $\overline{5Y}$ | " | " | " | " | " | " | " |
| | | 33 | | | | | | | " | | | | | OUT | 3/ | " | $\overline{6Y}$ | " | " | " | " | " | " | " |
| $V_{T-2}$ | 3006 | 34 | 3/ | OUT | | | | | " | | | | | | | 5.5V | $\overline{1Y}$ | 0.6 | 1.4 | 0.6 | 1.4 | 0.6 | 1.4 | " |
| | | 35 | | | 3/ | OUT | | | " | | | | | | | " | $\overline{2Y}$ | " | " | " | " | " | " | " |
| | | 36 | | | | | 3/ | OUT | " | | | | | | | " | $\overline{3Y}$ | " | " | " | " | " | " | " |
| | | 37 | | | | | | | " | OUT | 3/ | | | | | " | $\overline{4Y}$ | " | " | " | " | " | " | " |
| | | 38 | | | | | | | " | | | OUT | 3/ | | | " | $\overline{5Y}$ | " | " | " | " | " | " | " |
| | | 39 | | | | | | | " | | | | | OUT | 3/ | " | $\overline{6Y}$ | " | " | " | " | " | " | " |
| $V_{T+1}$ | 3006 | 40 | 4/ | OUT | | | | | " | | | | | | | 4.5V | $\overline{1Y}$ | 1.2 | 1.9 | 1.2 | 1.9 | 1.2 | 1.9 | " |
| | | 41 | | | 4/ | OUT | | | " | | | | | | | " | $\overline{2Y}$ | " | " | " | " | " | " | " |
| | | 42 | | | | | 4/ | OUT | " | | | | | | | " | $\overline{3Y}$ | " | " | " | " | " | " | " |
| | | 43 | | | | | | | " | OUT | 4/ | | | | | " | $\overline{4Y}$ | " | " | " | " | " | " | " |
| | | 44 | | | | | | | " | | | OUT | 4/ | | | " | $\overline{5Y}$ | " | " | " | " | " | " | " |
| | | 45 | | | | | | | " | | | | | OUT | 4/ | " | $\overline{6Y}$ | " | " | " | " | " | " | " |
| $V_{T+2}$ | 3006 | 46 | 4/ | OUT | | | | | " | | | | | | | 5.5V | $\overline{1Y}$ | 1.4 | 2.1 | 1.4 | 2.1 | 1.4 | 2.1 | " |
| | | 47 | | | 4/ | OUT | | | " | | | | | | | " | $\overline{2Y}$ | " | " | " | " | " | " | " |
| | | 48 | | | | | 4/ | OUT | " | | | | | | | " | $\overline{3Y}$ | " | " | " | " | " | " | " |
| | | 49 | | | | | | | " | OUT | 4/ | | | | | " | $\overline{4Y}$ | " | " | " | " | " | " | " |
| | | 50 | | | | | | | " | | | OUT | 4/ | | | " | $\overline{5Y}$ | " | " | " | " | " | " | " |
| | | 51 | | | | | | | " | | | | | OUT | 4/ | " | $\overline{6Y}$ | " | " | " | " | " | " | " |

See footnotes at end of table.

TABLE III. Group A inspection for device type 52 – Continued.

| Symbol | MIL-STD-883 method | Case 2 / C and D | Terminal conditions 1/ | | | | | | | | | | | | | | Measured terminal | Test limits | | | | | | Unit |
|---|---|---|---|---|---|---|---|---|---|---|---|---|---|---|---|---|---|---|---|---|---|---|---|---|
| | | | 2 | 3 | 4 | 6 | 8 | 9 | 10 | 12 | 13 | 14 | 16 | 18 | 19 | 20 | | Subgroup 1 $T_C$ = +25°C | | Subgroup 2 $T_C$ = +125°C | | Subgroup 3 $T_C$ = -55°C | | |
| | | | 1 | 2 | 3 | 4 | 5 | 6 | 7 | 8 | 9 | 10 | 11 | 12 | 13 | 14 | | | | | | | | |
| | | Test no. | 1A | $\overline{1Y}$ | 2A | $\overline{2Y}$ | 3A | $\overline{3Y}$ | GND | $\overline{4Y}$ | 4A | $\overline{5Y}$ | 5A | $\overline{6Y}$ | 6A | $V_{CC}$ | | Min | Max | Min | Max | Min | Max | |
| $V_{H1}$ | | 52 | 5/ | | | | | | GND | | | | | | | 4.5V | 1Y | 0.4 | 1.4 | 0.4 | 1.4 | 0.4 | 1.4 | V |
| | | 53 | | | 5/ | | | | " | | | | | | | " | 2Y | " | " | " | " | " | " | " |
| | | 54 | | | | | 5/ | | " | | | | | | | " | 3Y | " | " | " | " | " | " | " |
| | | 55 | | | | | | | " | | 5/ | | | | | " | 4Y | " | " | " | " | " | " | " |
| | | 56 | | | | | | | " | | | | 5/ | | | " | 5Y | " | " | " | " | " | " | " |
| | | 57 | | | | | | | " | | | | | | 5/ | " | 6Y | " | " | " | " | " | " | " |
| $V_{H2}$ | | 58 | 5/ | | | | | | " | | | | | | | 5.5V | 1Y | " | 1.5 | " | 1.5 | " | 1.5 | " |
| | | 59 | | | 5/ | | | | " | | | | | | | " | 2Y | " | " | " | " | " | " | " |
| | | 60 | | | | | 5/ | | " | | | | | | | " | 3Y | " | " | " | " | " | " | " |
| | | 61 | | | | | | | " | | 5/ | | | | | " | 4Y | " | " | " | " | " | " | " |
| | | 62 | | | | | | | " | | | | 5/ | | | " | 5Y | " | " | " | " | " | " | " |
| | | 63 | | | | | | | " | | | | | | 5/ | " | 6Y | " | " | " | " | " | " | " |
| $V_{OL8}$ | 3007 | 64 | 1.9V | 20μA | | | | | " | | | | | | | 4.5V | 1Y | | 0.1 | | 0.1 | | 0.1 | " |
| | | 65 | | | 1.9V | 20μA | | | " | | | | | | | " | 2Y | | " | | " | | " | " |
| | | 66 | | | | | 1.9V | 20μA | " | | | | | | | " | 3Y | | " | | " | | " | " |
| | | 67 | | | | | | | " | 20μA | 1.9V | | | | | " | 4Y | | " | | " | | " | " |
| | | 68 | | | | | | | " | | | 20μA | 1.9V | | | " | 5Y | | " | | " | | " | " |
| | | 69 | | | | | | | " | | | | | 20μA | 1.9V | " | 6Y | | " | | " | | " | " |
| $V_{OL9}$ | 3007 | 70 | 2.1V | 4.0mA | | | | | " | | | | | | | 5.5V | 1Y | | 0.26 | | 0.4 | | 0.26 | " |
| | | 71 | | | 2.1V | 4.0mA | | | " | | | | | | | " | 2Y | | " | | " | | " | " |
| | | 72 | | | | | 2.1V | 4.0mA | " | | | | | | | " | 3Y | | " | | " | | " | " |
| | | 73 | | | | | | | " | 4.0mA | 2.1V | | | | | " | 4Y | | " | | " | | " | " |
| | | 74 | | | | | | | " | | | 4.0mA | 2.1V | | | " | 5Y | | " | | " | | " | " |
| | | 75 | | | | | | | " | | | | | 4.0mA | 2.1V | " | 6Y | | " | | " | | " | " |
| $I_{OS4}$ | 3011 | 76 | GND | GND | GND | | GND | | " | | GND | | GND | | GND | 4V | 1Y | -10 | -120 | -10 | -120 | -10 | -120 | mA |
| | | 77 | " | | " | GND | " | | " | | " | | " | | " | " | 2Y | " | " | " | " | " | " | " |
| | | 78 | " | | " | | " | GND | " | | " | | " | | " | " | 3Y | " | " | " | " | " | " | " |
| | | 79 | " | | " | | " | | " | GND | " | | " | | " | " | 4Y | " | " | " | " | " | " | " |
| | | 80 | " | | " | | " | | " | | " | GND | " | | " | " | 5Y | " | " | " | " | " | " | " |
| | | 81 | " | | " | | " | | " | | " | | " | GND | " | " | 6Y | " | " | " | " | " | " | " |
| $I_{IH}$ | 3010 | 82 | 5.5V | | " | | " | | " | | " | | " | | " | 5.5V | 1A | | .05 | | 0.1 | | | μA |
| | | 83 | GND | | 5.5V | | " | | " | | " | | " | | " | " | 2A | | " | | " | | | " |
| | | 84 | " | | GND | | 5.5V | | " | | " | | " | | " | " | 3A | | " | | " | | | " |
| | | 85 | " | | " | | GND | | " | | 5.5V | | " | | " | " | 4A | | " | | " | | | " |
| | | 86 | " | | " | | " | | " | | GND | | 5.5V | | " | " | 5A | | " | | " | | | " |
| | | 87 | " | | " | | " | | " | | GND | | GND | | 5.5V | " | 6A | | " | | " | | | " |
| $I_{IL}$ | 3009 | 88 | " | | 5.5V | | 5.5V | | " | | 5.5V | | 5.5V | | " | " | 1A | | -.05 | | -0.1 | | | " |
| | | 89 | 5.5V | | GND | | 5.5V | | " | | " | | " | | " | " | 2A | | " | | " | | | " |
| | | 90 | " | | 5.5V | | GND | | " | | " | | " | | " | " | 3A | | " | | " | | | " |
| | | 91 | " | | " | | 5.5V | | " | | GND | | " | | " | " | 4A | | " | | " | | | " |
| | | 92 | " | | " | | " | | " | | 5.5V | | GND | | " | " | 5A | | " | | " | | | " |
| | | 93 | " | | " | | " | | " | | 5.5V | | 5.5V | | GND | " | 6A | | " | | " | | | " |
| | | | | | | | | | | | | | | | | | | Subgroup 4 $T_C$ = +25°C | | | | | | |
| | | | | | | | | | | | | | | | | | | Min | Max | | | | | |
| $C_i$ | 3012 | 94 | 2/ | | | | | | GND | | | | | | | GND | 1A | | 10 | | | | | pF |
| | | 95 | | | 2/ | | | | " | | | | | | | " | 2A | | " | | | | | " |
| | | 96 | | | | | 2/ | | " | | | | | | | " | 3A | | " | | | | | " |
| | | 97 | | | | | | | " | | 2/ | | | | | " | 4A | | " | | | | | " |
| | | 98 | | | | | | | " | | | | 2/ | | | " | 5A | | " | | | | | " |
| | | 99 | | | | | | | " | | | | | | 2/ | " | 6A | | " | | | | | " |

See footnotes at end of table.

TABLE III. Group A inspection for device type 52 – Continued.

| Symbol | MIL-STD-883 method | Case | Terminal conditions 1/ | | | | | | | | | | | | | | Measured terminal | Test limits | | | | | | Unit |
|---|---|---|---|---|---|---|---|---|---|---|---|---|---|---|---|---|---|---|---|---|---|---|---|---|
| | | 2 | 2 | 3 | 4 | 6 | 8 | 9 | 10 | 12 | 13 | 14 | 16 | 18 | 19 | 20 | | Subgroup 9 $T_C$ = +25°C | | Subgroup 10 $T_C$ = +125°C | | Subgroup 11 $T_C$ = -55°C | | |
| | | C and D | 1 | 2 | 3 | 4 | 5 | 6 | 7 | 8 | 9 | 10 | 11 | 12 | 13 | 14 | | | | | | | | |
| | | Test no. | 1A | $\overline{1Y}$ | 2A | $\overline{2Y}$ | 3A | $\overline{3Y}$ | GND | $\overline{4Y}$ | 4A | $\overline{5Y}$ | 5A | $\overline{6Y}$ | 6A | $V_{CC}$ | | Min | Max | Min | Max | Min | Max | |
| $t_{PHL}$ | 3003 (Fig. 3) | 100 | IN | OUT | | | | | GND | | | | | | | 4.5V | 1A to $\overline{1Y}$ | 10 | 33 | 10 | 44 | 10 | 33 | ns |
| | | 101 | | | IN | OUT | | | " | | | | | | | " | 2A to $\overline{2Y}$ | " | " | " | " | " | " | " |
| | | 102 | | | | | IN | OUT | " | | | | | | | " | 3A to $\overline{3Y}$ | " | " | " | " | " | " | " |
| | | 103 | | | | | | | " | OUT | IN | | | | | " | 4A to $\overline{4Y}$ | " | " | " | " | " | " | " |
| | | 104 | | | | | | | " | | | OUT | IN | | | " | 5A to $\overline{5Y}$ | " | " | " | " | " | " | " |
| | | 105 | | | | | | | " | | | | | OUT | IN | " | 6A to $\overline{6Y}$ | " | " | " | " | " | " | " |
| $t_{PLH}$ | 3003 (Fig. 3) | 106 | IN | OUT | | | | | " | | | | | | | " | 1A to $\overline{1Y}$ | " | " | " | " | " | " | " |
| | | 107 | | | IN | OUT | | | " | | | | | | | " | 2A to $\overline{2Y}$ | " | " | " | " | " | " | " |
| | | 108 | | | | | IN | OUT | " | | | | | | | " | 3A to $\overline{3Y}$ | " | " | " | " | " | " | " |
| | | 109 | | | | | | | " | OUT | IN | | | | | " | 4A to $\overline{4Y}$ | " | " | " | " | " | " | " |
| | | 110 | | | | | | | " | | | OUT | IN | | | " | 5A to $\overline{5Y}$ | " | " | " | " | " | " | " |
| | | 111 | | | | | | | " | | | | | OUT | IN | " | 6A to $\overline{6Y}$ | " | " | " | " | " | " | " |
| $t_{THL}$ | 3004 (Fig. 3) | 112 | IN | OUT | | | | | " | | | | | | | " | $\overline{1Y}$ | 3 | 15 | 3 | 20 | 3 | 15 | " |
| | | 113 | | | IN | OUT | | | " | | | | | | | " | $\overline{2Y}$ | " | " | " | " | " | " | " |
| | | 114 | | | | | IN | OUT | " | | | | | | | " | $\overline{3Y}$ | " | " | " | " | " | " | " |
| | | 115 | | | | | | | " | OUT | IN | | | | | " | $\overline{4Y}$ | " | " | " | " | " | " | " |
| | | 116 | | | | | | | " | | | OUT | IN | | | " | $\overline{5Y}$ | " | " | " | " | " | " | " |
| | | 117 | | | | | | | " | | | | | OUT | IN | " | $\overline{6Y}$ | " | " | " | " | " | " | " |
| $t_{TLH}$ | 3004 (Fig. 3) | 118 | IN | OUT | | | | | " | | | | | | | " | $\overline{1Y}$ | " | " | " | " | " | " | " |
| | | 119 | | | IN | OUT | | | " | | | | | | | " | $\overline{2Y}$ | " | " | " | " | " | " | " |
| | | 120 | | | | | IN | OUT | " | | | | | | | " | $\overline{3Y}$ | " | " | " | " | " | " | " |
| | | 121 | | | | | | | " | OUT | IN | | | | | " | $\overline{4Y}$ | " | " | " | " | " | " | " |
| | | 122 | | | | | | | " | | | OUT | IN | | | " | $\overline{5Y}$ | " | " | " | " | " | " | " |
| | | 123 | | | | | | | " | | | | | OUT | IN | " | $\overline{6Y}$ | " | " | " | " | " | " | " |

See footnotes at end of table.

TABLE III. Group A inspection for device type 53.

| Symbol | MIL-STD-883 method | Cases R, S, and 2 | Terminal conditions 1/ | | | | | | | | | | | | | | | | | | | | Measured terminal | Test limits | | | | | | Unit |
|---|---|---|---|---|---|---|---|---|---|---|---|---|---|---|---|---|---|---|---|---|---|---|---|---|---|---|---|---|---|---|
| | | | 1 | 2 | 3 | 4 | 5 | 6 | 7 | 8 | 9 | 10 | 11 | 12 | 13 | 14 | 15 | 16 | 17 | 18 | 19 | 20 | | Subgroup 1 $T_C$ = +25°C | | Subgroup 2 $T_C$ = +125°C | | Subgroup 3 $T_C$ = -55°C | | |
| | | Test no. | $\overline{1G}$ | 1A1 | $\overline{2Y4}$ | 1A2 | $\overline{2Y3}$ | 1A3 | $\overline{2Y2}$ | 1A4 | $\overline{2Y1}$ | GND | 2A1 | $\overline{1Y4}$ | 2A2 | $\overline{1Y3}$ | 2A3 | $\overline{1Y2}$ | 2A4 | $\overline{1Y1}$ | $\overline{2G}$ | $V_{CC}$ | | Min | Max | Min | Max | Min | Max | |
| $V_{IC}$ (pos) | | 1 | 1mA | | | | | | | | | OPEN | | | | | | | | | | GND | $\overline{1G}$ | 1/ | 1.5 | | | | | V |
| | | 2 | | 1mA | | | | | | | | " | | | | | | | | | | " | 1A1 | " | " | | | | | " |
| | | 3 | | | | 1mA | | | | | | " | | | | | | | | | | " | 1A2 | " | " | | | | | " |
| | | 4 | | | | | | 1mA | | | | " | | | | | | | | | | " | 1A3 | " | " | | | | | " |
| | | 5 | | | | | | | | 1mA | | " | | | | | | | | | | " | 1A4 | " | " | | | | | " |
| | | 6 | | | | | | | | | | " | 1mA | | | | | | | | | " | 2A1 | " | " | | | | | " |
| | | 7 | | | | | | | | | | " | | | 1mA | | | | | | | " | 2A2 | " | " | | | | | " |
| | | 8 | | | | | | | | | | " | | | | | 1mA | | | | | " | 2A3 | " | " | | | | | " |
| | | 9 | | | | | | | | | | " | | | | | | | 1mA | | | " | 2A4 | " | " | | | | | " |
| | | 10 | | | | | | | | | | " | | | | | | | | | 1mA | " | $\overline{2G}$ | " | " | | | | | " |
| $V_{IC}$ (neg) | | 11 | -1mA | | | | | | | | | GND | | | | | | | | | | OPEN | $\overline{1G}$ | | -1.5 | | | | | " |
| | | 12 | | -1mA | | | | | | | | " | | | | | | | | | | " | 1A1 | | " | | | | | " |
| | | 13 | | | | -1mA | | | | | | " | | | | | | | | | | " | 1A2 | | " | | | | | " |
| | | 14 | | | | | | -1mA | | | | " | | | | | | | | | | " | 1A3 | | " | | | | | " |
| | | 15 | | | | | | | | -1mA | | " | | | | | | | | | | " | 1A4 | | " | | | | | " |
| | | 16 | | | | | | | | | | " | -1mA | | | | | | | | | " | 2A1 | | " | | | | | " |
| | | 17 | | | | | | | | | | " | | | -1mA | | | | | | | " | 2A2 | | " | | | | | " |
| | | 18 | | | | | | | | | | " | | | | | -1mA | | | | | " | 2A3 | | " | | | | | " |
| | | 19 | | | | | | | | | | " | | | | | | | -1mA | | | " | 2A4 | | " | | | | | " |
| | | 20 | | | | | | | | | | " | | | | | | | | | -1mA | " | $\overline{2G}$ | | " | | | | | " |
| $I_{CCH}$ | 3005 | 21 | GND | GND | | GND | | GND | | GND | | " | GND | | GND | | GND | | GND | | GND | 5.5V | $V_{CC}$ | | 0.2 | | 20 | | | µA |
| $I_{CCL}$ | 3005 | 22 | GND | 5.5V | | 5.5V | | 5.5V | | 5.5V | | " | 5.5V | | 5.5V | | 5.5V | | 5.5V | | GND | " | " | | 0.2 | | 20 | | | µA |
| $I_{CC}\Delta$ | | 223 | 2.4V | 0.4V | | 0.4V | | 0.4V | | 0.4V | | " | 0.4V | | 0.4V | | 0.4V | | 0.4V | | " | " | " | | 3.0 | | 3.0 | | 3.0 | mA |
| | | 224 | GND | 2.4V | | " | | " | | " | | " | " | | " | | " | | " | | " | " | " | | " | | " | | " | " |
| | | 225 | " | 0.4V | | 2.4V | | " | | " | | " | " | | " | | " | | " | | " | " | " | | " | | " | | " | " |
| | | 226 | " | " | | 0.4V | | 2.4V | | " | | " | " | | " | | " | | " | | " | " | " | | " | | " | | " | " |
| | | 227 | " | " | | " | | 0.4V | | 2.4V | | " | " | | " | | " | | " | | " | " | " | | " | | " | | " | " |
| | | 228 | " | " | | " | | " | | 0.4V | | " | 2.4V | | " | | " | | " | | " | " | " | | " | | " | | " | " |
| | | 229 | " | " | | " | | " | | " | | " | 0.4V | | 2.4V | | " | | " | | " | " | " | | " | | " | | " | " |
| | | 230 | " | " | | " | | " | | " | | " | " | | 0.4V | | 2.4V | | " | | " | " | " | | " | | " | | " | " |
| | | 231 | " | " | | " | | " | | " | | " | " | | " | | 0.4V | | 2.4V | | " | " | " | | " | | " | | " | " |
| | | 232 | " | " | | " | | " | | " | | " | " | | " | | " | | 0.4V | | 2.4V | " | " | | " | | " | | " | " |
| $I_{CCZ}$ | 3005 | 25 | 5.5V | 5.5V | | 5.5V | | 5.5V | | 5.5V | | " | GND | | GND | | GND | | GND | | GND | " | " | | 0.1 | | 10 | | | µA |
| | | 26 | GND | GND | | GND | | GND | | GND | | " | 5.5V | | 5.5V | | 5.5V | | 5.5V | | 5.5V | " | " | | 0.1 | | 10 | | | µA |
| $V_{OH6}$ | 3006 | 27 | 0.8V | 0.8V | | | | | | | | " | | | | | | | | -20µA | | 4.5V | 1Y1 | 4.4 | | 4.4 | | 4.4 | | V |
| | | 28 | " | | | 0.8V | | | | | | " | | | | | | -20µA | | | | " | 1Y2 | " | | " | | " | | " |
| | | 29 | " | | | | | 0.8V | | | | " | | | | -20µA | | | | | | " | 1Y3 | " | | " | | " | | " |
| | | 30 | " | | | | | | | 0.8V | | " | | -20µA | | | | | | | | " | 1Y4 | " | | " | | " | | " |
| | | 31 | | | | | | | | | -20µA | " | 0.8V | | | | | | | | 0.8V | " | 2Y1 | " | | " | | " | | " |
| | | 32 | | | | | | | -20µA | | | " | | | 0.8V | | | | | | " | " | 2Y2 | " | | " | | " | | " |
| | | 33 | | | | | -20µA | | | | | " | | | | | 0.8V | | | | " | " | 2Y3 | " | | " | | " | | " |
| | | 34 | | | -20µA | | | | | | | " | | | | | | | 0.8V | | " | " | 2Y4 | " | | " | | " | | " |
| $V_{OH7}$ | 3006 | 35 | 0.8V | 0.8V | | | | | | | | " | | | | | | -6.0mA | | -6.0mA | | 5.5V | 1Y1 | 3.98 | | 3.7 | | 3.98 | | " |
| | | 36 | " | | | 0.8V | | | | | | " | | | | | | | | | | " | 1Y2 | " | | " | | " | | " |
| | | 37 | " | | | | | 0.8V | | | | " | | | | -6.0mA | | | | | | " | 1Y3 | " | | " | | " | | " |
| | | 38 | " | | | | | | | 0.8V | | " | | -6.0mA | | | | | | | | " | 1Y4 | " | | " | | " | | " |
| | | 39 | | | | | | | | | -6.0mA | " | 0.8V | | | | | | | | 0.8V | " | 2Y1 | " | | " | | " | | " |
| | | 40 | | | | | | | -6.0mA | | | " | | | 0.8V | | | | | | " | " | 2Y2 | " | | " | | " | | " |
| | | 41 | | | | | -6.0mA | | | | | " | | | | | 0.8V | | | | " | " | 2Y3 | " | | " | | " | | " |
| | | 42 | | | -6.0mA | | | | | | | " | | | | | | | 0.8V | | " | " | 2Y4 | " | | " | | " | | " |
| $V_{OL6}$ | 3007 | 43 | 0.8V | 2.0V | | | | | | | | " | | | | | | | | 20µA | | 4.5V | 1Y1 | | 0.1 | | 0.1 | | 0.1 | " |
| | | 44 | " | | | 2.0V | | | | | | " | | | | | | 20µA | | | | " | 1Y2 | | " | | " | | " | " |
| | | 45 | " | | | | | 2.0V | | | | " | | | | 20µA | | | | | | " | 1Y3 | | " | | " | | " | " |
| | | 46 | " | | | | | | | 2.0V | | " | | 20µA | | | | | | | | " | 1Y4 | | " | | " | | " | " |
| | | 47 | | | | | | | | | 20µA | " | 2.0V | | | | | | | | 0.8V | " | 2Y1 | | " | | " | | " | " |
| | | 48 | | | | | | | 20µA | | | " | | | 2.0V | | | | | | " | " | 2Y2 | | " | | " | | " | " |
| | | 49 | | | | | 20µA | | | | | " | | | | | 2.0V | | | | " | " | 2Y3 | | " | | " | | " | " |
| | | 50 | | | 20µA | | | | | | | " | | | | | | | 2.0V | | " | " | 2Y4 | | " | | " | | " | " |

See footnotes at end of table.

TABLE III. Group A inspection for device type 53 – Continued.

| Symbol | MIL-STD-883 method | Cases R, S, and 2 | Terminal conditions 1/ | | | | | | | | | | | | | | | | | | | | Measured terminal | Test limits | | | | | | Unit |
|---|---|---|---|---|---|---|---|---|---|---|---|---|---|---|---|---|---|---|---|---|---|---|---|---|---|---|---|---|---|---|
| | | | 1 | 2 | 3 | 4 | 5 | 6 | 7 | 8 | 9 | 10 | 11 | 12 | 13 | 14 | 15 | 16 | 17 | 18 | 19 | 20 | | Subgroup 1 $T_C$ = +25°C | | Subgroup 2 $T_C$ = +125°C | | Subgroup 3 $T_C$ = -55°C | | |
| | | Test no. | $\overline{1G}$ | 1A1 | $\overline{2Y4}$ | 1A2 | $\overline{2Y3}$ | 1A3 | $\overline{2Y2}$ | 1A4 | $\overline{2Y1}$ | GND | 2A1 | $\overline{1Y4}$ | 2A2 | $\overline{1Y3}$ | 2A3 | $\overline{1Y2}$ | 2A4 | $\overline{1Y1}$ | $\overline{2G}$ | $V_{CC}$ | | Min | Max | Min | Max | Min | Max | |
| $V_{OL7}$ | 3007 | 51 | 0.8V | 2.0V | | | | | | | | GND | | | | | | | | 6.0mA | | 5.5V | $\overline{1Y1}$ | | 0.26 | | 0.4 | | 0.26 | µA |
| | | 52 | " | | | 2.0V | | | | | | " | | | | | | 6.0mA | | | | " | $\overline{1Y2}$ | | " | | " | | " | " |
| | | 53 | " | | | | | 2.0V | | | | " | | | | 6.0mA | | | | | | " | $\overline{1Y3}$ | | " | | " | | " | " |
| | | 54 | " | | | | | | | 2.0V | | " | | 6.0mA | | | | | | | | " | $\overline{1Y4}$ | | " | | " | | " | " |
| | | 55 | | | | | | | | | 6.0mA | " | 2.0V | | | | | | | | 0.8V | " | $\overline{2Y1}$ | | " | | " | | " | " |
| | | 56 | | | | | | | 6.0mA | | | " | | | 2.0V | | | | | | " | " | $\overline{2Y2}$ | | " | | " | | " | " |
| | | 57 | | | | | 6.0mA | | | | | " | | | | | 2.0V | | | | " | " | $\overline{2Y3}$ | | " | | " | | " | " |
| | | 58 | | | 6.0mA | | | | | | | " | | | | | | | 2.0V | | " | " | $\overline{2Y4}$ | | " | | " | | " | " |
| $I_{OZH}$ | | 59 | 9/ | 9/ | | | | | | | | GND | | | | | | | | 5.5V | | 5.5V | $\overline{1Y1}$ | | 0.2 | | 2.0 | | | " |
| | | 60 | " | | | 9/ | | | | | | " | | | | | | 5.5V | | | | " | $\overline{1Y2}$ | | " | | " | | | " |
| | | 61 | " | | | | | 9/ | | | | " | | | | 5.5V | | | | | | " | $\overline{1Y3}$ | | " | | " | | | " |
| | | 62 | " | | | | | | | 9/ | | " | | 5.5V | | | | | | | | " | $\overline{1Y4}$ | | " | | " | | | " |
| | | 63 | | | | | | | | | 5.5V | " | 9/ | | | | | | | | 9/ | " | $\overline{2Y1}$ | | " | | " | | | " |
| | | 64 | | | | | | | 5.5V | | | " | | | 9/ | | | | | | " | " | $\overline{2Y2}$ | | " | | " | | | " |
| | | 65 | | | | | 5.5V | | | | | " | | | | | 9/ | | | | " | " | $\overline{2Y3}$ | | " | | " | | | " |
| | | 66 | | | 5.5V | | | | | | | " | | | | | | | 9/ | | | " | $\overline{2Y4}$ | | " | | " | | | " |
| $I_{OZL}$ | | 67 | 9/ | 9/ | | | | | | | | " | | | | | | | | GND | | " | $\overline{1Y1}$ | | -0.2 | | -2.0 | | | " |
| | | 68 | " | | | 9/ | | | | | | " | | | | | | GND | | | | " | $\overline{1Y2}$ | | " | | " | | | " |
| | | 69 | " | | | | | 9/ | | | | " | | | | GND | | | | | | " | $\overline{1Y3}$ | | " | | " | | | " |
| | | 70 | " | | | | | | | 9/ | | " | | GND | | | | | | | | " | $\overline{1Y4}$ | | " | | " | | | " |
| | | 71 | | | | | | | | | GND | " | 9/ | | | | | | | | 9/ | " | $\overline{2Y1}$ | | " | | " | | | " |
| | | 72 | | | | | | | GND | | | " | | | 9/ | | | | | | " | " | $\overline{2Y2}$ | | " | | " | | | " |
| | | 73 | | | | | GND | | | | | " | | | | | 9/ | | | | " | " | $\overline{2Y3}$ | | " | | " | | | " |
| | | 74 | | | GND | | | | | | | " | | | | | | | 9/ | | " | " | $\overline{2Y4}$ | | " | | " | | | " |
| $I_{IH}$ | 3010 | 75 | 5.5V | GND | | GND | | GND | | GND | | " | GND | | GND | | GND | | GND | | GND | " | $\overline{1G}$ | | .05 | | 0.1 | | | " |
| | | 76 | GND | 5.5V | | GND | | " | | " | | " | " | | " | | " | | " | | " | " | 1A1 | | " | | " | | | " |
| | | 77 | " | GND | | 5.5V | | | | | | " | | | | | | | | | | " | 1A2 | | " | | " | | | " |
| | | 78 | " | " | | GND | | 5.5V | | " | | " | " | | " | | " | | " | | " | " | 1A3 | | " | | " | | | " |
| | | 79 | " | " | | " | | GND | | 5.5V | | " | | | | | | | | | | " | 1A4 | | " | | " | | | " |
| | | 80 | " | " | | " | | " | | GND | | " | 5.5V | | " | | " | | " | | " | " | 2A1 | | " | | " | | | " |
| | | 81 | " | " | | " | | " | | " | | " | GND | | " | | " | | " | | " | " | 2A2 | | " | | " | | | " |
| | | 82 | " | " | | " | | " | | " | | " | " | | 5.5V | | 5.5V | | " | | " | " | 2A3 | | " | | " | | | " |
| | | 83 | " | " | | " | | " | | " | | " | | | GND | | GND | | 5.5V | | " | " | 2A4 | | " | | " | | | " |
| | | 84 | " | " | | " | | " | | " | | " | | | GND | | GND | | GND | | 5.5V | " | 2G | | " | | " | | | " |
| $I_{IL}$ | 3009 | 85 | " | 5.5V | | 5.5V | | 5.5V | | 5.5V | | " | 5.5V | | 5.5V | | 5.5V | | 5.5V | | " | " | $\overline{1G}$ | | -.05 | | -0.1 | | | " |
| | | 86 | 5.5V | GND | | 5.5V | | " | | " | | " | " | | " | | " | | " | | " | " | 1A1 | | " | | " | | | " |
| | | 87 | " | 5.5V | | GND | | | | | | " | | | | | | | | | | " | 1A2 | | " | | " | | | " |
| | | 88 | " | " | | 5.5V | | GND | | | | " | | | | | | | | | | " | 1A3 | | " | | " | | | " |
| | | 89 | " | " | | " | | 5.5V | | GND | | " | | | | | | | | | | " | 1A4 | | " | | " | | | " |
| | | 90 | " | " | | " | | " | | 5.5V | | " | GND | | | | | | | | | " | 2A1 | | " | | " | | | " |
| | | 91 | " | " | | " | | " | | " | | " | 5.5V | | GND | | | | | | | " | 2A2 | | " | | " | | | " |
| | | 92 | " | " | | " | | " | | " | | " | " | | 5.5V | | GND | | | | | " | 2A3 | | " | | " | | | " |
| | | 93 | " | " | | " | | " | | " | | " | | | " | | 5.5V | | GND | | | " | 2A4 | | " | | " | | | " |
| | | 94 | " | " | | " | | " | | " | | " | | | " | | " | | 5.5V | | GND | " | 2G | | " | | " | | | " |
| $I_{OS4}$ | 3011 | 95 | GND | GND | | GND | | GND | | GND | | " | GND | | GND | | GND | | GND | GND | | 4V | $\overline{1Y1}$ | -10 | -135 | -10 | -135 | -10 | -135 | mA |
| | | 96 | " | " | | " | | " | | " | | " | " | | " | | " | GND | " | | | " | $\overline{1Y2}$ | " | " | " | " | " | " | " |
| | | 97 | " | " | | " | | " | | " | | " | " | | " | GND | " | | " | | | " | $\overline{1Y3}$ | " | " | " | " | " | " | " |
| | | 98 | " | " | | " | | " | | " | | " | " | GND | " | | " | | " | | | " | $\overline{1Y4}$ | " | " | " | " | " | " | " |
| | | 99 | | " | | " | | " | | " | GND | " | " | | " | | " | | " | | GND | " | $\overline{2Y1}$ | " | " | " | " | " | " | " |
| | | 100 | | " | | " | | " | GND | " | | " | " | | " | | " | | " | | " | " | $\overline{2Y2}$ | " | " | " | " | " | " | " |
| | | 101 | | " | | " | GND | " | | " | | " | " | | " | | " | | " | | " | " | $\overline{2Y3}$ | " | " | " | " | " | " | " |
| | | 102 | | " | GND | " | | " | | " | | " | " | | " | | " | | " | | " | " | $\overline{2Y4}$ | " | " | " | " | " | " | " |

See footnotes at end of table.

TABLE III. Group A inspection for device type 53 – Continued.

| Symbol | MIL-STD-883 method | Cases R, S, and 2 | Terminal conditions 1/ | | | | | | | | | | | | | | | | | | | | Measured terminal | Test limits | | | | | | Unit |
|---|---|---|---|---|---|---|---|---|---|---|---|---|---|---|---|---|---|---|---|---|---|---|---|---|---|---|---|---|---|---|
| | | | 1 | 2 | 3 | 4 | 5 | 6 | 7 | 8 | 9 | 10 | 11 | 12 | 13 | 14 | 15 | 16 | 17 | 18 | 19 | 20 | | Subgroup 4 $T_C$ = +25°C | | | | | | |
| | | Test no. | $\overline{1G}$ | 1A1 | $\overline{2Y4}$ | 1A2 | $\overline{2Y3}$ | 1A3 | $\overline{2Y2}$ | 1A4 | $\overline{2Y1}$ | GND | 2A1 | $\overline{1Y4}$ | 2A2 | $\overline{1Y3}$ | 2A3 | $\overline{1Y2}$ | 2A4 | $\overline{1Y1}$ | $\overline{2G}$ | $V_{CC}$ | | Min | Max | Min | Max | Min | Max | |
| $C_i$ | 3012 | 103 | 2/ | | | | | | | | | GND | | | | | | | | | | GND | $\overline{1G}$ | | 10 | | | | | pF |
| | | 104 | | 2/ | | | | | | | | " | | | | | | | | | | " | 1A1 | | " | | | | | " |
| | | 105 | | | | 2/ | | | | | | " | | | | | | | | | | " | 1A2 | | " | | | | | " |
| | | 106 | | | | | | 2/ | | | | " | | | | | | | | | | " | 1A3 | | " | | | | | " |
| | | 107 | | | | | | | | 2/ | | " | | | | | | | | | | " | 1A4 | | " | | | | | " |
| | | 108 | | | | | | | | | | " | 2/ | | | | | | | | | " | 2A1 | | " | | | | | " |
| | | 109 | | | | | | | | | | " | | | 2/ | | | | | | | " | 2A2 | | " | | | | | " |
| | | 110 | | | | | | | | | | " | | | | | 2/ | | | | | " | 2A3 | | " | | | | | " |
| | | 111 | | | | | | | | | | " | | | | | | | 2/ | | | " | 2A4 | | " | | | | | " |
| | | 112 | | | | | | | | | | " | | | | | | | | | 2/ | " | $\overline{2G}$ | | " | | | | | " |
| $C_o$ | 3012 | 113 | GND | | 2/ | | 2/ | | 2/ | | 2/ | " | | | | | | | | | 5.5V | 5.5V | $\overline{2Y}$'s | | 20 | | | | | " |
| | | 114 | 5.5V | | | | | | | | | " | | 2/ | | 2/ | | 2/ | | 2/ | GND | 5.5V | $\overline{1Y}$'s | | 20 | | | | | " |
| | | | | | | | | | | | | | | | | | | | | | | | | Subgroup 7 $T_C$ = +25°C | | Subgroup 8 $T_C$ = +125°C | | Subgroup 8 $T_C$ = -55°C | | |
| | | | | | | | | | | | | | | | | | | | | | | | | Min | Max | Min | Max | Min | Max | |
| Truth table | 3014 8/ | 115 | B | B | H | B | H | B | H | B | H | GND | B | H | B | H | B | H | B | H | B | 4.5V | 7/ | | | | | | | |
| | | 116 | B | A | L | A | L | A | L | A | L | GND | A | L | A | L | A | L | A | L | B | 4.5V | 7/ | | | | | | | |
| | | | | | | | | | | | | | | | | | | | | | | | | Subgroup 9 $T_C$ = +25°C | | Subgroup 10 $T_C$ = +125°C | | Subgroup 11 $T_C$ = -55°C | | |
| | | | | | | | | | | | | | | | | | | | | | | | | Min | Max | Min | Max | Min | Max | |
| $t_{PHL}$ | 3003 (Fig. 3) | 117 | GND | IN | | | | | | | | GND | | | | | | | | OUT | | 4.5V | 1A1 to $\overline{1Y1}$ | 8 | 22 | 8 | 29 | 8 | 22 | ns |
| | | 118 | " | | | IN | | | | | | " | | | | | | OUT | | | | " | 1A2 to $\overline{1Y2}$ | " | " | " | " | " | " | " |
| | | 119 | " | | | | | IN | | | | " | | | | OUT | | | | | | " | 1A3 to $\overline{1Y3}$ | " | " | " | " | " | " | " |
| | | 120 | " | | | | | | | IN | | " | | OUT | | | | | | | | " | 1A4 to $\overline{1Y4}$ | " | " | " | " | " | " | " |
| | | 121 | | | | | | | | | OUT | " | IN | | | | | | | | GND | " | 2A1 to $\overline{2Y1}$ | " | " | " | " | " | " | " |
| | | 122 | | | | | | | OUT | | | " | | | IN | | | | | | " | " | 2A2 to $\overline{2Y2}$ | " | " | " | " | " | " | " |
| | | 123 | | | | | OUT | | | | | " | | | | | IN | | | | " | " | 2A3 to $\overline{2Y3}$ | " | " | " | " | " | " | " |
| | | 124 | | | OUT | | | | | | | " | | | | | | | IN | | " | " | 2A4 to $\overline{2Y4}$ | " | " | " | " | " | " | " |
| $t_{PLH}$ | 3003 (Fig. 3) | 125 | GND | IN | | | | | | | | " | | | | | | | | OUT | | " | 1A1 to $\overline{1Y1}$ | " | " | " | " | " | " | " |
| | | 126 | " | | | IN | | | | | | " | | | | OUT | | | | | | " | 1A2 to $\overline{1Y2}$ | " | " | " | " | " | " | " |
| | | 127 | " | | | | | IN | | | | " | | | | | | OUT | | | | " | 1A3 to $\overline{1Y3}$ | " | " | " | " | " | " | " |
| | | 128 | " | | | | | | | IN | | " | | OUT | | | | | | | | " | 1A4 to $\overline{1Y4}$ | " | " | " | " | " | " | " |
| | | 129 | | | | | | | | | OUT | " | IN | | | | | | | | GND | " | 2A1 to $\overline{2Y1}$ | " | " | " | " | " | " | " |
| | | 130 | | | | | | | OUT | | | " | | | IN | | | | | | " | " | 2A2 to $\overline{2Y2}$ | " | " | " | " | " | " | " |
| | | 131 | | | | | OUT | | | | | " | | | | | IN | | | | " | " | 2A3 to $\overline{2Y3}$ | " | " | " | " | " | " | " |
| | | 132 | | | OUT | | | | | | | " | | | | | | | IN | | " | " | 2A4 to $\overline{2Y4}$ | " | " | " | " | " | " | " |
| $t_{PZL}$ | 3003 (Fig. 3) | 133 | IN | 4.5V | | | | | | | | " | | | | | | | | OUT | | " | $\overline{1G}$ to $\overline{1Y1}$ | " | 31 | " | 41 | " | 31 | " |
| | | 134 | " | | | 4.5V | | | | | | " | | | | | | OUT | | | | " | $\overline{1G}$ to $\overline{1Y2}$ | " | " | " | " | " | " | " |
| | | 135 | " | | | | | 4.5V | | | | " | | | | OUT | | | | | | " | $\overline{1G}$ to $\overline{1Y3}$ | " | " | " | " | " | " | " |
| | | 136 | " | | | | | | | 4.5V | | " | | OUT | | | | | | | | " | $\overline{1G}$ to $\overline{1Y4}$ | " | " | " | " | " | " | " |
| | | 137 | | | | | | | | | OUT | " | 4.5V | | | | | | | | IN | " | $\overline{2G}$ to $\overline{2Y1}$ | " | " | " | " | " | " | " |
| | | 138 | | | | | | | OUT | | | " | | | 4.5V | | | | | | " | " | $\overline{2G}$ to $\overline{2Y2}$ | " | " | " | " | " | " | " |
| | | 139 | | | | | OUT | | | | | " | | | | | 4.5V | | | | " | " | $\overline{2G}$ to $\overline{2Y3}$ | " | " | " | " | " | " | " |
| | | 140 | | | OUT | | | | | | | " | | | | | | | 4.5V | | " | " | $\overline{2G}$ to $\overline{2Y4}$ | " | " | " | " | " | " | " |
| $t_{PZH}$ | 3003 (Fig. 3) | 141 | IN | GND | | | | | | | | " | | | | | | | | OUT | | " | $\overline{1G}$ to $\overline{1Y1}$ | " | " | " | " | " | " | " |
| | | 142 | " | | | GND | | | | | | " | | | | | | OUT | | | | " | $\overline{1G}$ to $\overline{1Y2}$ | " | " | " | " | " | " | " |
| | | 143 | " | | | | | GND | | | | " | | | | OUT | | | | | | " | $\overline{1G}$ to $\overline{1Y3}$ | " | " | " | " | " | " | " |
| | | 144 | " | | | | | | | GND | | " | | OUT | | | | | | | | " | $\overline{1G}$ to $\overline{1Y4}$ | " | " | " | " | " | " | " |
| | | 145 | | | | | | | | | OUT | " | GND | | | | | | | | IN | " | $\overline{2G}$ to $\overline{2Y1}$ | " | " | " | " | " | " | " |
| | | 146 | | | | | | | OUT | | | " | | | GND | | | | | | " | " | $\overline{2G}$ to $\overline{2Y2}$ | " | " | " | " | " | " | " |
| | | 147 | | | | | OUT | | | | | " | | | | | GND | | | | " | " | $\overline{2G}$ to $\overline{2Y3}$ | " | " | " | " | " | " | " |
| | | 148 | | | OUT | | | | | | | " | | | | | | | GND | | " | " | $\overline{2G}$ to $\overline{2Y4}$ | " | " | " | " | " | " | " |
| $t_{PLZ}$ | 3003 (Fig. 3) | 149 | IN | 4.5V | | | | | | | | " | | | | | | | | OUT | | " | $\overline{1G}$ to $\overline{1Y1}$ | " | " | " | " | " | " | " |
| | | 150 | " | | | 4.5V | | | | | | " | | | | | | OUT | | | | " | $\overline{1G}$ to $\overline{1Y2}$ | " | " | " | " | " | " | " |
| | | 151 | " | | | | | 4.5V | | | | " | | | | OUT | | | | | | " | $\overline{1G}$ to $\overline{1Y3}$ | " | " | " | " | " | " | " |
| | | 152 | " | | | | | | | 4.5V | | " | | OUT | | | | | | | | " | $\overline{1G}$ to $\overline{1Y4}$ | " | " | " | " | " | " | " |
| | | 153 | | | | | | | | | OUT | " | 4.5V | | | | | | | | IN | " | $\overline{2G}$ to $\overline{2Y1}$ | " | " | " | " | " | " | " |
| | | 154 | | | | | | | OUT | | | " | | | 4.5V | | | | | | " | " | $\overline{2G}$ to $\overline{2Y2}$ | " | " | " | " | " | " | " |
| | | 155 | | | | | OUT | | | | | " | | | | | 4.5V | | | | " | " | $\overline{2G}$ to $\overline{2Y3}$ | " | " | " | " | " | " | " |
| | | 156 | | | OUT | | | | | | | " | | | | | | | 4.5V | | " | " | $\overline{2G}$ to $\overline{2Y4}$ | " | " | " | " | " | " | " |

See footnotes at end of table.

TABLE III. Group A inspection for device type 53 – Continued.

| Symbol | MIL-STD-883 method | Cases R, S, and 2 | Terminal conditions 1/ | | | | | | | | | | | | | | | | | | | | Measured terminal | Test limits | | | | | | Unit |
|---|---|---|---|---|---|---|---|---|---|---|---|---|---|---|---|---|---|---|---|---|---|---|---|---|---|---|---|---|---|---|
| | | | 1 | 2 | 3 | 4 | 5 | 6 | 7 | 8 | 9 | 10 | 11 | 12 | 13 | 14 | 15 | 16 | 17 | 18 | 19 | 20 | | Subgroup 9 $T_C$ = +25°C | | Subgroup 10 $T_C$ = +125°C | | Subgroup 11 $T_C$ = -55°C | | |
| | | Test no. | $\overline{1G}$ | 1A1 | $\overline{2Y4}$ | 1A2 | $\overline{2Y3}$ | 1A3 | $\overline{2Y2}$ | 1A4 | $\overline{2Y1}$ | GND | 2A1 | $\overline{1Y4}$ | 2A2 | $\overline{1Y3}$ | 2A3 | $\overline{1Y2}$ | 2A4 | $\overline{1Y1}$ | $\overline{2G}$ | $V_{CC}$ | | Min | Max | Min | Max | Min | Max | |
| $t_{PHZ}$ | 3003 (Fig. 3) | 157 | IN | GND | | GND | | GND | | GND | | GND | | | | | | OUT | | OUT | | 4.5V | $\overline{1G}$ to $\overline{1Y1}$ | 8 | 31 | 8 | 41 | 8 | 31 | ns |
| | | 158 | " | | | | | | | | | " | | | | | | | | | | " | $\overline{1G}$ to $\overline{1Y2}$ | " | " | " | " | " | " | " |
| | | 159 | " | | | | | | | | | " | | | | OUT | | | | | | " | $\overline{1G}$ to $\overline{1Y3}$ | " | " | " | " | " | " | " |
| | | 160 | " | | | | | | | | | " | | OUT | | | | | | | | " | $\overline{1G}$ to $\overline{1Y4}$ | " | " | " | " | " | " | " |
| | | 161 | | | | | | | | | OUT | " | GND | | | | | | | | IN | " | $\overline{2G}$ to $\overline{2Y1}$ | " | " | " | " | " | " | " |
| | | 162 | | | | | | | OUT | | | " | | | GND | | | | | | " | " | $\overline{2G}$ to $\overline{2Y2}$ | " | " | " | " | " | " | " |
| | | 163 | | | | | OUT | | | | | " | | | | | GND | | | | " | " | $\overline{2G}$ to $\overline{2Y3}$ | " | " | " | " | " | " | " |
| | | 164 | | | OUT | | | | | | | " | | | | | | | GND | | " | " | $\overline{2G}$ to $\overline{2Y4}$ | " | " | " | " | " | " | " |
| $t_{THL}$ | 3004 (Fig. 3) | 165 | GND | IN | | IN | | IN | | IN | | " | | | | | | OUT | | OUT | | " | $\overline{1Y1}$ | 2 | 12 | 2 | 16 | 2 | 12 | " |
| | | 166 | " | | | | | | | | | " | | | | | | | | | | " | $\overline{1Y2}$ | " | " | " | " | " | " | " |
| | | 167 | " | | | | | | | | | " | | | | OUT | | | | | | " | $\overline{1Y3}$ | " | " | " | " | " | " | " |
| | | 168 | " | | | | | | | | | " | | OUT | | | | | | | | " | $\overline{1Y4}$ | " | " | " | " | " | " | " |
| | | 169 | | | | | | | | | OUT | " | IN | | | | | | | | GND | " | $\overline{2Y1}$ | " | " | " | " | " | " | " |
| | | 170 | | | | | | | OUT | | | " | | | IN | | | | | | " | " | $\overline{2Y2}$ | " | " | " | " | " | " | " |
| | | 171 | | | | | OUT | | | | | " | | | | | IN | | | | " | " | $\overline{2Y3}$ | " | " | " | " | " | " | " |
| | | 172 | | | OUT | | | | | | | " | | | | | | | IN | | " | " | $\overline{2Y4}$ | " | " | " | " | " | " | " |
| $t_{TLH}$ | 3004 (Fig. 3) | 173 | GND | IN | | IN | | IN | | IN | | GND | | | | | | OUT | | OUT | | 4.5V | $\overline{1Y1}$ | 2 | 12 | 2 | 16 | 2 | 12 | ns |
| | | 174 | " | | | | | | | | | " | | | | | | | | | | " | $\overline{1Y2}$ | " | " | " | " | " | " | " |
| | | 175 | " | | | | | | | | | " | | | | OUT | | | | | | " | $\overline{1Y3}$ | " | " | " | " | " | " | " |
| | | 176 | " | | | | | | | | | " | | OUT | | | | | | | | " | $\overline{1Y4}$ | " | " | " | " | " | " | " |
| | | 177 | | | | | | | | | OUT | " | IN | | | | | | | | GND | " | $\overline{2Y1}$ | " | " | " | " | " | " | " |
| | | 178 | | | | | | | OUT | | | " | | | IN | | | | | | " | " | $\overline{2Y2}$ | " | " | " | " | " | " | " |
| | | 179 | | | | | OUT | | | | | " | | | | | IN | | | | " | " | $\overline{2Y3}$ | " | " | " | " | " | " | " |
| | | 180 | | | OUT | | | | | | | " | | | | | | | IN | | " | " | $\overline{2Y4}$ | " | " | " | " | " | " | " |

See footnotes at end of table.

TABLE III. Group A inspection for device type 54.

| Symbol | MIL-STD-883 method | Cases R, S, and 2 | Terminal conditions 1/ | | | | | | | | | | | | | | | | | | | | Measured terminal | Test limits | | | | | | Unit |
|---|---|---|---|---|---|---|---|---|---|---|---|---|---|---|---|---|---|---|---|---|---|---|---|---|---|---|---|---|---|---|
| | | | 1 | 2 | 3 | 4 | 5 | 6 | 7 | 8 | 9 | 10 | 11 | 12 | 13 | 14 | 15 | 16 | 17 | 18 | 19 | 20 | | Subgroup 1 $T_C$ = +25°C | | Subgroup 2 $T_C$ = +125°C | | Subgroup 3 $T_C$ = -55°C | | |
| | | Test no. | $\overline{1G}$ | 1A1 | 2Y4 | 1A2 | 2Y3 | 1A3 | 2Y2 | 1A4 | 2Y1 | GND | 2A1 | 1Y4 | 2A2 | 1Y3 | 2A3 | 1Y2 | 2A4 | 1Y1 | 2G | $V_{CC}$ | | Min | Max | Min | Max | Min | Max | |
| $V_{IC}$ (pos) | | 1 | 1mA | | | | | | | | | OPEN | | | | | | | | | | GND | $\overline{1G}$ | 1/ | 1.5 | | | | | V |
| | | 2 | | 1mA | | | | | | | | " | | | | | | | | | | " | 1A1 | " | " | | | | | " |
| | | 3 | | | | 1mA | | | | | | " | | | | | | | | | | " | 1A2 | " | " | | | | | " |
| | | 4 | | | | | | 1mA | | | | " | | | | | | | | | | " | 1A3 | " | " | | | | | " |
| | | 5 | | | | | | | | 1mA | | " | | | | | | | | | | " | 1A4 | " | " | | | | | " |
| | | 6 | | | | | | | | | | " | 1mA | | | | | | | | | " | 2A1 | " | " | | | | | " |
| | | 7 | | | | | | | | | | " | | | 1mA | | | | | | | " | 2A2 | " | " | | | | | " |
| | | 8 | | | | | | | | | | " | | | | | 1mA | | | | | " | 2A3 | " | " | | | | | " |
| | | 9 | | | | | | | | | | " | | | | | | | 1mA | | | " | 2A4 | " | " | | | | | " |
| | | 10 | | | | | | | | | | " | | | | | | | | | 1mA | " | 2G | " | " | | | | | " |
| $V_{IC}$ (neg) | | 11 | -1mA | | | | | | | | | GND | | | | | | | | | | OPEN | $\overline{1G}$ | | -1.5 | | | | | " |
| | | 12 | | -1mA | | | | | | | | " | | | | | | | | | | " | 1A1 | | " | | | | | " |
| | | 13 | | | | -1mA | | | | | | " | | | | | | | | | | " | 1A2 | | " | | | | | " |
| | | 14 | | | | | | -1mA | | | | " | | | | | | | | | | " | 1A3 | | " | | | | | " |
| | | 15 | | | | | | | | -1mA | | " | | | | | | | | | | " | 1A4 | | " | | | | | " |
| | | 16 | | | | | | | | | | " | -1mA | | | | | | | | | " | 2A1 | | " | | | | | " |
| | | 17 | | | | | | | | | | " | | | -1mA | | | | | | | " | 2A2 | | " | | | | | " |
| | | 18 | | | | | | | | | | " | | | | | -1mA | | | | | " | 2A3 | | " | | | | | " |
| | | 19 | | | | | | | | | | " | | | | | | | -1mA | | | " | 2A4 | | " | | | | | " |
| | | 20 | | | | | | | | | | " | | | | | | | | | -1mA | " | 2G | | " | | | | | " |
| $I_{CCH}$ | 3005 | 21 | GND | 5.5V | | 5.5V | | 5.5V | | 5.5V | | " | 5.5V | | 5.5V | | 5.5V | | 5.5V | | 5.5V | 5.5V | $V_{CC}$ | | 0.2 | | 20 | | | µA |
| $I_{CCL}$ | 3005 | 22 | GND | GND | | GND | | GND | | GND | | " | GND | | GND | | GND | | GND | | " | " | " | | 0.2 | | 20 | | | µA |
| $I_{CC}\Delta$ | | 23 | 0.8V | 0.8V | | 0.8V | | 0.8V | | 0.8V | | " | 2.4V | | 0.8V | | 0.8V | | 0.8V | | 2.4V | " | " | | .490 | | 1.50 | | | mA |
| | | 24 | 0.8V | 0.8V | | 0.8V | | 0.8V | | 0.8V | | " | 0.8V | | 0.8V | | 0.8V | | 0.8V | | 2.4V | " | " | | " | | " | | | " |
| | | 25 | 2.4V | 0.8V | | 0.8V | | 0.8V | | 0.8V | | " | 0.8V | | 0.8V | | 0.8V | | 0.8V | | 0.8V | " | " | | " | | " | | | " |
| $I_{CCZ}$ | 3005 | 26 | 5.5V | 5.5V | | 5.5V | | 5.5V | | 5.5V | | " | GND | | GND | | GND | | GND | | 5.5V | " | " | | 0.1 | | 10 | | | " |
| | | 27 | GND | GND | | GND | | GND | | GND | | " | 5.5V | | 5.5V | | 5.5V | | 5.5V | | GND | " | " | | 0.1 | | 10 | | | " |
| $V_{OH6}$ | 3006 | 28 | 0.8V | 2.0V | | | | | | | | " | | | | | | | | -20µA | | 4.5V | 1Y1 | 4.4 | | 4.4 | | 4.4 | | V |
| | | 29 | " | | | 2.0V | | | | | | " | | | | | | -20µA | | | | " | 1Y2 | " | | " | | " | | " |
| | | 30 | " | | | | | 2.0V | | | | " | | | | -20µA | | | | | | " | 1Y3 | " | | " | | " | | " |
| | | 31 | " | | | | | | | 2.0V | | " | | -20µA | | | | | | | | " | 1Y4 | " | | " | | " | | " |
| | | 32 | | | | | | | | | -20µA | " | 2.0V | | | | | | | | 2.0V | " | 2Y1 | " | | " | | " | | " |
| | | 33 | | | | | | | -20µA | | | " | | | 2.0V | | | | | | " | " | 2Y2 | " | | " | | " | | " |
| | | 34 | | | | | -20µA | | | | | " | | | | | 2.0V | | | | " | " | 2Y3 | " | | " | | " | | " |
| | | 35 | | | -20µA | | | | | | | " | | | | | | | 2.0V | | " | " | 2Y4 | " | | " | | " | | " |
| $V_{OH7}$ | 3006 | 36 | 0.8V | 2.0V | | | | | | | | " | | | | | | | | -6.0mA | | 5.5V | 1Y1 | 3.98 | | 3.7 | | 3.98 | | " |
| | | 37 | " | | | 2.0V | | | | | | " | | | | | | -6.0mA | | | | " | 1Y2 | " | | " | | " | | " |
| | | 38 | " | | | | | 2.0V | | | | " | | | | -6.0mA | | | | | | " | 1Y3 | " | | " | | " | | " |
| | | 39 | " | | | | | | | 2.0V | | " | | -6.0mA | | | | | | | | " | 1Y4 | " | | " | | " | | " |
| | | 40 | | | | | | | | | -6.0mA | " | 2.0V | | | | | | | | 2.0V | " | 2Y1 | " | | " | | " | | " |
| | | 41 | | | | | | | -6.0mA | | | " | | | 2.0V | | | | | | " | " | 2Y2 | " | | " | | " | | " |
| | | 42 | | | | | -6.0mA | | | | | " | | | | | 2.0V | | | | " | " | 2Y3 | " | | " | | " | | " |
| | | 43 | | | -6.0mA | | | | | | | " | | | | | | | 2.0V | | " | " | 2Y4 | " | | " | | " | | " |
| $V_{OL6}$ | 3007 | 44 | 0.8V | 0.8V | | | | | | | | " | | | | | | | | 20µA | | 4.5V | 1Y1 | | 0.1 | | 0.1 | | 0.1 | " |
| | | 45 | " | | | 0.8V | | | | | | " | | | | | | 20µA | | | | " | 1Y2 | | " | | " | | " | " |
| | | 46 | " | | | | | 0.8V | | | | " | | | | 20µA | | | | | | " | 1Y3 | | " | | " | | " | " |
| | | 47 | " | | | | | | | 0.8V | | " | | 20µA | | | | | | | | " | 1Y4 | | " | | " | | " | " |
| | | 48 | | | | | | | | | 20µA | " | 0.8V | | | | | | | | 2.0V | " | 2Y1 | | " | | " | | " | " |
| | | 49 | | | | | | | 20µA | | | " | | | 0.8V | | | | | | " | " | 2Y2 | | " | | " | | " | " |
| | | 50 | | | | | 20µA | | | | | " | | | | | 0.8V | | | | " | " | 2Y3 | | " | | " | | " | " |
| | | 51 | | | 20µA | | | | | | | " | | | | | | | 0.8V | | " | " | 2Y4 | | " | | " | | " | " |
| $V_{OL7}$ | 3007 | 52 | 0.8V | 0.8V | | | | | | | | " | | | | | | | | 6.0mA | | 5.5V | 1Y1 | | 0.26 | | 0.4 | | 0.26 | " |
| | | 53 | " | | | 0.8V | | | | | | " | | | | | | 6.0mA | | | | " | 1Y2 | | " | | " | | " | " |
| | | 54 | " | | | | | 0.8V | | | | " | | | | 6.0mA | | | | | | " | 1Y3 | | " | | " | | " | " |
| | | 55 | " | | | | | | | 0.8V | | " | | 6.0mA | | | | | | | | " | 1Y4 | | " | | " | | " | " |
| | | 56 | | | | | | | | | 6.0mA | " | 0.8V | | | | | | | | 2.0V | " | 2Y1 | | " | | " | | " | " |
| | | 57 | | | | | | | 6.0mA | | | " | | | 0.8V | | | | | | " | " | 2Y2 | | " | | " | | " | " |
| | | 58 | | | | | 6.0mA | | | | | " | | | | | 0.8V | | | | " | " | 2Y3 | | " | | " | | " | " |
| | | 59 | | | 6.0mA | | | | | | | " | | | | | | | 0.8V | | " | " | 2Y4 | | " | | " | | " | " |

See footnotes at end of table.

TABLE III. Group A inspection for device type 54 – Continued.

| Symbol | MIL-STD-883 method | Cases R, S, and 2 | Terminal conditions 1/ | | | | | | | | | | | | | | | | | | | | Measured terminal | Test limits | | | | | | Unit |
|---|---|---|---|---|---|---|---|---|---|---|---|---|---|---|---|---|---|---|---|---|---|---|---|---|---|---|---|---|---|---|
| | | | 1 | 2 | 3 | 4 | 5 | 6 | 7 | 8 | 9 | 10 | 11 | 12 | 13 | 14 | 15 | 16 | 17 | 18 | 19 | 20 | | Subgroup 1 $T_C$ = +25°C | | Subgroup 2 $T_C$ = +125°C | | Subgroup 3 $T_C$ = -55°C | | |
| | | Test no. | $\overline{1G}$ | 1A1 | 2Y4 | 1A2 | 2Y3 | 1A3 | 2Y2 | 1A4 | 2Y1 | GND | 2A1 | 1Y4 | 2A2 | 1Y3 | 2A3 | 1Y2 | 2A4 | 1Y1 | 2G | $V_{CC}$ | | Min | Max | Min | Max | Min | Max | |
| $I_{OZH}$ | | 60 | 9/ | 9/ | | | | | | | | GND | | | | | | | | 5.5V | | 5.5V | 1Y1 | | 0.2 | | 2.0 | | | µA |
| | | 61 | " | | | 9/ | | | | | | " | | | | | | 5.5V | | | | " | 1Y2 | | " | | " | | | " |
| | | 62 | " | | | | | 9/ | | | | " | | | | 5.5V | | | | | | " | 1Y3 | | " | | " | | | " |
| | | 63 | " | | | | | | | 9/ | | " | | 5.5V | | | | | | | | " | 1Y4 | | " | | " | | | " |
| | | 64 | | | | | | | | | 5.5V | " | 9/ | | | | | | | | 9/ | " | 2Y1 | | " | | " | | | " |
| | | 65 | | | | | | | 5.5V | | | " | | | 9/ | | | | | | " | " | 2Y2 | | " | | " | | | " |
| | | 66 | | | | | 5.5V | | | | | " | | | | | 9/ | | | | " | " | 2Y3 | | " | | " | | | " |
| | | 67 | | | 5.5V | | | | | | | " | | | | | | | 9/ | | " | " | 2Y4 | | " | | " | | | " |
| $I_{OZL}$ | | 68 | 9/ | 9/ | | | | | | | | " | | | | | | | | GND | | " | 1Y1 | | -0.2 | | -2.0 | | | " |
| | | 69 | " | | | 9/ | | | | | | " | | | | | | GND | | | | " | 1Y2 | | " | | " | | | " |
| | | 70 | " | | | | | 9/ | | | | " | | | | GND | | | | | | " | 1Y3 | | " | | " | | | " |
| | | 71 | " | | | | | | | 9/ | | " | | GND | | | | | | | | " | 1Y4 | | " | | " | | | " |
| | | 72 | | | | | | | | | GND | " | 9/ | | | | | | | | 9/ | " | 2Y1 | | " | | " | | | " |
| | | 73 | | | | | | | GND | | | " | | | 9/ | | | | | | " | " | 2Y2 | | " | | " | | | " |
| | | 74 | | | | | GND | | | | | " | | | | | 9/ | | | | " | " | 2Y3 | | " | | " | | | " |
| | | 75 | | | GND | | | | | | | " | | | | | | | 9/ | | " | " | 2Y4 | | " | | " | | | " |
| $I_{IH}$ | 3010 | 76 | 5.5V | GND | | GND | | GND | | GND | | " | GND | | GND | | GND | | GND | | GND | " | $\overline{TG}$ | | .05 | | 0.1 | | | " |
| | | 77 | GND | 5.5V | | GND | | " | | " | | " | " | | " | | " | | " | | " | " | 1A1 | | " | | " | | | " |
| | | 78 | " | GND | | 5.5V | | " | | " | | " | " | | " | | " | | " | | " | " | 1A2 | | " | | " | | | " |
| | | 79 | " | " | | GND | | 5.5V | | " | | " | " | | " | | " | | " | | " | " | 1A3 | | " | | " | | | " |
| | | 80 | " | " | | " | | GND | | 5.5V | | " | " | | " | | " | | " | | " | " | 1A4 | | " | | " | | | " |
| | | 81 | " | " | | " | | " | | GND | | " | 5.5V | | " | | " | | " | | " | " | 2A1 | | " | | " | | | " |
| | | 82 | " | " | | " | | " | | " | | " | GND | | 5.5V | | " | | " | | " | " | 2A2 | | " | | " | | | " |
| | | 83 | " | " | | " | | " | | " | | " | " | | GND | | 5.5V | | " | | " | " | 2A3 | | " | | " | | | " |
| | | 84 | " | " | | " | | " | | " | | " | " | | " | | GND | | 5.5V | | " | " | 2A4 | | " | | " | | | " |
| | | 85 | " | " | | " | | " | | " | | " | " | | " | | GND | | GND | | 5.5V | " | 2G | | " | | " | | | " |
| $I_{IL}$ | 3009 | 86 | " | 5.5V | | 5.5V | | 5.5V | | 5.5V | | " | 5.5V | | 5.5V | | 5.5V | | 5.5V | | " | " | $\overline{TG}$ | | -.05 | | -0.1 | | | " |
| | | 87 | 5.5V | GND | | 5.5V | | " | | " | | " | " | | " | | " | | " | | " | " | 1A1 | | " | | " | | | " |
| | | 88 | " | 5.5V | | GND | | " | | " | | " | " | | " | | " | | " | | " | " | 1A2 | | " | | " | | | " |
| | | 89 | " | " | | 5.5V | | GND | | " | | " | " | | " | | " | | " | | " | " | 1A3 | | " | | " | | | " |
| | | 90 | " | " | | " | | 5.5V | | GND | | " | " | | " | | " | | " | | " | " | 1A4 | | " | | " | | | " |
| | | 91 | " | " | | " | | " | | 5.5V | | " | GND | | " | | " | | " | | " | " | 2A1 | | " | | " | | | " |
| | | 92 | " | " | | " | | " | | " | | " | 5.5V | | GND | | " | | " | | " | " | 2A2 | | " | | " | | | " |
| | | 93 | " | " | | " | | " | | " | | " | " | | 5.5V | | GND | | " | | " | " | 2A3 | | " | | " | | | " |
| | | 94 | " | " | | " | | " | | " | | " | " | | " | | 5.5V | | GND | | " | " | 2A4 | | " | | " | | | " |
| | | 95 | " | " | | " | | " | | " | | " | " | | " | | 5.5V | | 5.5V | | GND | " | 2G | | " | | " | | | " |
| $I_{OS4}$ | 3011 | 96 | GND | 4V | | 4V | | 4V | | 4V | | " | 4V | | 4V | | 4V | | 4V | GND | | 4V | 1Y1 | -10 | -135 | -10 | -135 | -10 | -135 | mA |
| | | 97 | " | " | | " | | " | | " | | " | " | | " | | " | GND | " | | | " | 1Y2 | " | " | " | " | " | " | " |
| | | 98 | " | " | | " | | " | | " | | " | " | | " | GND | " | | " | | | " | 1Y3 | " | " | " | " | " | " | " |
| | | 99 | " | " | | " | | " | | " | | " | " | GND | " | | " | | " | | | " | 1Y4 | " | " | " | " | " | " | " |
| | | 100 | | " | | " | | " | | " | GND | " | " | | " | | " | | " | | 4V | " | 2Y1 | " | " | " | " | " | " | " |
| | | 101 | | " | | " | | " | GND | " | | " | " | | " | | " | | " | | " | " | 2Y2 | " | " | " | " | " | " | " |
| | | 102 | | " | | " | GND | " | | " | | " | " | | " | | " | | " | | " | " | 2Y3 | " | " | " | " | " | " | " |
| | | 103 | | " | GND | " | | " | | " | | " | " | | " | | " | | " | | " | " | 2Y4 | " | " | " | " | " | " | " |
| | | | | | | | | | | | | | | | | | | | | | | | | Subgroup 4 $T_C$ = +25°C | | | | | | |
| | | | | | | | | | | | | | | | | | | | | | | | | Min | Max | | | | | |
| $C_i$ | 3012 | 104 | 2/ | | | | | | | | | GND | | | | | | | | | | GND | $\overline{TG}$ | | 10 | | | | | pF |
| | | 105 | | 2/ | | | | | | | | " | | | | | | | | | | " | 1A1 | | " | | | | | " |
| | | 106 | | | | 2/ | | | | | | " | | | | | | | | | | " | 1A2 | | " | | | | | " |
| | | 107 | | | | | | 2/ | | | | " | | | | | | | | | | " | 1A3 | | " | | | | | " |
| | | 108 | | | | | | | | 2/ | | " | | | | | | | | | | " | 1A4 | | " | | | | | " |
| | | 109 | | | | | | | | | | " | 2/ | | | | | | | | | " | 2A1 | | " | | | | | " |
| | | 110 | | | | | | | | | | " | | | 2/ | | | | | | | " | 2A2 | | " | | | | | " |
| | | 111 | | | | | | | | | | " | | | | | 2/ | | | | | " | 2A3 | | " | | | | | " |
| | | 112 | | | | | | | | | | " | | | | | | | 2/ | | | " | 2A4 | | " | | | | | " |
| | | 113 | | | | | | | | | | " | | | | | | | | | 2/ | " | 2G | | " | | | | | " |
| $C_o$ | 3012 | 114 | 5.5V | | | | | | | | | " | | 2/ | | 2/ | | 2/ | | 2/ | 5.5V | 5.5V | 1Y's | | 20 | | | | | " |
| | | 115 | GND | | 2/ | | 2/ | | 2/ | | 2/ | " | | | | | | | | | GND | 5.5V | 2Y's | | 20 | | | | | " |

See footnotes at end of table.

TABLE III. Group A inspection for device type 54 – Continued.

| Symbol | MIL-STD-883 method | Cases R, S, and 2 | Terminal conditions 1/ | | | | | | | | | | | | | | | | | | | | Measured terminal | Test limits | | | | | | Unit |
|---|---|---|---|---|---|---|---|---|---|---|---|---|---|---|---|---|---|---|---|---|---|---|---|---|---|---|---|---|---|---|
| | | | 1 | 2 | 3 | 4 | 5 | 6 | 7 | 8 | 9 | 10 | 11 | 12 | 13 | 14 | 15 | 16 | 17 | 18 | 19 | 20 | | Subgroup 7 $T_C$ = +25°C | | Subgroup 8 $T_C$ = +125°C | | Subgroup 8 $T_C$ = -55°C | | |
| | | Test no. | $\overline{1G}$ | 1A1 | 2Y4 | 1A2 | 2Y3 | 1A3 | 2Y2 | 1A4 | 2Y1 | GND | 2A1 | 1Y4 | 2A2 | 1Y3 | 2A3 | 1Y2 | 2A4 | 1Y1 | 2G | $V_{CC}$ | | Min | Max | Min | Max | Min | Max | |
| Truth table | 3014 8/ | 116 | B | B | L | B | L | B | L | B | L | GND | B | L | B | L | B | L | B | L | A | 4.5V | 7/ | | | | | | | |
| | | 117 | B | A | H | A | H | A | H | A | H | GND | A | H | A | H | A | H | A | H | A | 4.5V | 7/ | | | | | | | |
| | | | | | | | | | | | | | | | | | | | | | | | | Subgroup 9 $T_C$ = +25°C | | Subgroup 10 $T_C$ = +125°C | | Subgroup 11 $T_C$ = -55°C | | |
| | | | | | | | | | | | | | | | | | | | | | | | | Min | Max | Min | Max | Min | Max | |
| $t_{PHL}$ | 3003 (Fig. 3) | 118 | GND | IN | | IN | | IN | | IN | | GND | | OUT | | OUT | | OUT | | OUT | | 4.5V | 1A1 to 1Y1 | 8 | 23 | 8 | 30 | 8 | 23 | ns |
| | | 119 | " | | | | | | | | | " | | | | | | | | | | " | 1A2 to 1Y2 | " | " | " | " | " | " | " |
| | | 120 | " | | | | | | | | | " | | | | OUT | | | | | | " | 1A3 to 1Y3 | " | " | " | " | " | " | " |
| | | 121 | " | | | | | | | IN | | " | | | | | | | | | | " | 1A4 to 1Y4 | " | " | " | " | " | " | " |
| | | 122 | | | | | | | | | OUT | " | IN | | | | | | | | 4.5V | " | 2A1 to 2Y1 | " | " | " | " | " | " | " |
| | | 123 | | | | | | | OUT | | | " | | | IN | | | | | | " | " | 2A2 to 2Y2 | " | " | " | " | " | " | " |
| | | 124 | | | | | OUT | | | | | " | | | | | IN | | | | " | " | 2A3 to 2Y3 | " | " | " | " | " | " | " |
| | | 125 | | | OUT | | | | | | | " | | | | | | | IN | | " | " | 2A4 to 2Y4 | " | " | " | " | " | " | " |
| $t_{PLH}$ | 3003 (Fig. 3) | 126 | GND | IN | | IN | | IN | | IN | | " | | OUT | | OUT | | OUT | | OUT | | " | 1A1 to 1Y1 | " | " | " | " | " | " | " |
| | | 127 | " | | | | | | | | | " | | | | | | | | | | " | 1A2 to 1Y2 | " | " | " | " | " | " | " |
| | | 128 | " | | | | | | | | | " | | | | OUT | | | | | | " | 1A3 to 1Y3 | " | " | " | " | " | " | " |
| | | 129 | " | | | | | | | IN | | " | | | | | | | | | | " | 1A4 to 1Y4 | " | " | " | " | " | " | " |
| | | 130 | | | | | | | | | OUT | " | IN | | | | | | | | 4.5V | " | 2A1 to 2Y1 | " | " | " | " | " | " | " |
| | | 131 | | | | | | | OUT | | | " | | | IN | | | | | | " | " | 2A2 to 2Y2 | " | " | " | " | " | " | " |
| | | 132 | | | | | OUT | | | | | " | | | | | IN | | | | " | " | 2A3 to 2Y3 | " | " | " | " | " | " | " |
| | | 133 | | | OUT | | | | | | | " | | | | | | | IN | | " | " | 2A4 to 2Y4 | " | " | " | " | " | " | " |
| $t_{PZH}$ | 3003 (Fig. 3) | 134 | IN | 4.5V | | 4.5V | | 4.5V | | 4.5V | | " | | OUT | | OUT | | OUT | | OUT | | " | $\overline{1G}$ to 1Y1 | " | 33 | " | 44 | " | 33 | " |
| | | 135 | " | | | | | | | | | " | | | | | | | | | | " | $\overline{1G}$ to 1Y2 | " | " | " | " | " | " | " |
| | | 136 | " | | | | | | | | | " | | | | OUT | | | | | | " | $\overline{1G}$ to 1Y3 | " | " | " | " | " | " | " |
| | | 137 | " | | | | | | | 4.5V | | " | | OUT | | | | | | | | " | $\overline{1G}$ to 1Y4 | " | " | " | " | " | " | " |
| | | 138 | | | | | | | | | OUT | " | 4.5V | | | | | | | | IN | " | 2G to 2Y1 | " | " | " | " | " | " | " |
| | | 139 | | | | | | | OUT | | | " | | | 4.5V | | | | | | " | " | 2G to 2Y2 | " | " | " | " | " | " | " |
| | | 140 | | | | | OUT | | | | | " | | | | | 4.5V | | | | " | " | 2G to 2Y3 | " | " | " | " | " | " | " |
| | | 141 | | | OUT | | | | | | | " | | | | | | | 4.5V | | " | " | 2G to 2Y4 | " | " | " | " | " | " | " |
| $t_{PZL}$ | 3003 (Fig. 3) | 142 | IN | GND | | GND | | GND | | GND | | GND | | OUT | | OUT | | OUT | | OUT | | 4.5V | $\overline{1G}$ to 1Y1 | 8 | 33 | 8 | 44 | 8 | 33 | ns |
| | | 143 | " | | | | | | | | | " | | | | | | | | | | " | $\overline{1G}$ to 1Y2 | " | " | " | " | " | " | " |
| | | 144 | " | | | | | | | | | " | | | | OUT | | | | | | " | $\overline{1G}$ to 1Y3 | " | " | " | " | " | " | " |
| | | 145 | " | | | | | | | GND | | " | | OUT | | | | | | | | " | $\overline{1G}$ to 1Y4 | " | " | " | " | " | " | " |
| | | 146 | | | | | | | | | OUT | " | GND | | | | | | | | IN | " | 2G to 2Y1 | " | " | " | " | " | " | " |
| | | 147 | | | | | | | OUT | | | " | | | GND | | | | | | " | " | 2G to 2Y2 | " | " | " | " | " | " | " |
| | | 148 | | | | | OUT | | | | | " | | | | | GND | | | | " | " | 2G to 2Y3 | " | " | " | " | " | " | " |
| | | 149 | | | OUT | | | | | | | " | | | | | | | GND | | " | " | 2G to 2Y4 | " | " | " | " | " | " | " |
| $t_{PHZ}$ | 3003 (Fig. 3) | 150 | IN | 4.5V | | 4.5V | | 4.5V | | 4.5V | | " | | OUT | | OUT | | OUT | | OUT | | " | $\overline{1G}$ to 1Y1 | " | " | " | " | " | " | " |
| | | 151 | " | | | | | | | | | " | | | | | | | | | | " | $\overline{1G}$ to 1Y2 | " | " | " | " | " | " | " |
| | | 152 | " | | | | | | | | | " | | | | OUT | | | | | | " | $\overline{1G}$ to 1Y3 | " | " | " | " | " | " | " |
| | | 153 | " | | | | | | | 4.5V | | " | | OUT | | | | | | | | " | $\overline{1G}$ to 1Y4 | " | " | " | " | " | " | " |
| | | 154 | | | | | | | | | OUT | " | 4.5V | | | | | | | | IN | " | 2G to 2Y1 | " | " | " | " | " | " | " |
| | | 155 | | | | | | | OUT | | | " | | | 4.5V | | | | | | " | " | 2G to 2Y2 | " | " | " | " | " | " | " |
| | | 156 | | | | | OUT | | | | | " | | | | | 4.5V | | | | " | " | 2G to 2Y3 | " | " | " | " | " | " | " |
| | | 157 | | | OUT | | | | | | | " | | | | | | | 4.5V | | " | " | 2G to 2Y4 | " | " | " | " | " | " | " |
| $t_{PLZ}$ | 3003 (Fig. 3) | 158 | IN | GND | | GND | | GND | | GND | | " | | OUT | | OUT | | OUT | | OUT | | " | $\overline{1G}$ to 1Y1 | " | " | " | " | " | " | " |
| | | 159 | " | | | | | | | | | " | | | | | | | | | | " | $\overline{1G}$ to 1Y2 | " | " | " | " | " | " | " |
| | | 160 | " | | | | | | | | | " | | | | OUT | | | | | | " | $\overline{1G}$ to 1Y3 | " | " | " | " | " | " | " |
| | | 161 | " | | | | | | | GND | | " | | OUT | | | | | | | | " | $\overline{1G}$ to 1Y4 | " | " | " | " | " | " | " |
| | | 162 | | | | | | | | | OUT | " | GND | | | | | | | | IN | " | 2G to 2Y1 | " | " | " | " | " | " | " |
| | | 163 | | | | | | | OUT | | | " | | | GND | | | | | | " | " | 2G to 2Y2 | " | " | " | " | " | " | " |
| | | 164 | | | | | OUT | | | | | " | | | | | GND | | | | " | " | 2G to 2Y3 | " | " | " | " | " | " | " |
| | | 165 | | | OUT | | | | | | | " | | | | | | | GND | | " | " | 2G to 2Y4 | " | " | " | " | " | " | " |
| $t_{TLH}$ | 3004 (Fig. 3) | 166 | GND | IN | | IN | | IN | | IN | | " | | OUT | | OUT | | OUT | | OUT | | " | 1Y1 | 2 | 12 | 2 | 16 | 2 | 12 | " |
| | | 167 | " | | | | | | | | | " | | | | | | | | | | " | 1Y2 | " | " | " | " | " | " | " |
| | | 168 | " | | | | | | | | | " | | | | OUT | | | | | | " | 1Y3 | " | " | " | " | " | " | " |
| | | 169 | " | | | | | | | IN | | " | | OUT | | | | | | | | " | 1Y4 | " | " | " | " | " | " | " |
| | | 170 | | | | | | | | | OUT | " | IN | | | | | | | | 4.5V | " | 2Y1 | " | " | " | " | " | " | " |
| | | 171 | | | | | | | OUT | | | " | | | IN | | | | | | " | " | 2Y2 | " | " | " | " | " | " | " |
| | | 172 | | | | | OUT | | | | | " | | | | | IN | | | | " | " | 2Y3 | " | " | " | " | " | " | " |
| | | 173 | | | OUT | | | | | | | " | | | | | | | IN | | " | " | 2Y4 | " | " | " | " | " | " | " |

See footnotes at end of table.

TABLE III. Group A inspection for device type 54 – Continued.

| Symbol | MIL-STD-883 method | Cases R, S, and 2 | Terminal conditions 1/ | | | | | | | | | | | | | | | | | | | Measured terminal | Test limits | | | | | | Unit |
|---|---|---|---|---|---|---|---|---|---|---|---|---|---|---|---|---|---|---|---|---|---|---|---|---|---|---|---|---|---|
| | | | 1 | 2 | 3 | 4 | 5 | 6 | 7 | 8 | 9 | 10 | 11 | 12 | 13 | 14 | 15 | 16 | 17 | 18 | 19 | 20 | | Subgroup 9 $T_C$ = +25°C | | Subgroup 10 $T_C$ = +125°C | | Subgroup 11 $T_C$ = -55°C | | |
| | | Test no. | $\overline{1G}$ | 1A1 | 2Y4 | 1A2 | 2Y3 | 1A3 | 2Y2 | 1A4 | 2Y1 | GND | 2A1 | 1Y4 | 2A2 | 1Y3 | 2A3 | 1Y2 | 2A4 | 1Y1 | 2G | $V_{CC}$ | | Min | Max | Min | Max | Min | Max | |
| $t_{THL}$ | 3004 (Fig. 3) | 174 | GND | IN | | IN | | | | | | GND | | | | | | OUT | | OUT | | 4.5V | 1Y1 | 2 | 12 | 2 | 16 | 2 | 12 | ns |
| | | 175 | " | | | | | IN | | | | " | | | | OUT | | | | | | " | 1Y2 | " | " | " | " | " | " | " |
| | | 176 | " | | | | | | | IN | | " | | OUT | | | | | | | | " | 1Y3 | " | " | " | " | " | " | " |
| | | 177 | " | | | | | | OUT | | OUT | " | IN | | | | | | | | 4.5V | " | 1Y4 | " | " | " | " | " | " | " |
| | | 178 | | | | | | | | | | " | | | IN | | | | | | " | " | 2Y1 | " | " | " | " | " | " | " |
| | | 179 | | | | | OUT | | | | | " | | | | | IN | | | | " | " | 2Y2 | " | " | " | " | " | " | " |
| | | 180 | | | | | | | | | | " | | | | | | | IN | | " | " | 2Y3 | " | " | " | " | " | " | " |
| | | 181 | | | OUT | | | | | | | " | | | | | | | | | " | " | 2Y4 | " | " | " | " | " | " | " |

See footnotes at end of table.

TABLE III. Group A inspection for device type 55.

| Symbol | MIL-STD-883 method | Cases R, S, and 2 | Terminal conditions 1/ | | | | | | | | | | | | | | | | | | | | Measured terminal | Test limits | | | | | | Unit |
|---|---|---|---|---|---|---|---|---|---|---|---|---|---|---|---|---|---|---|---|---|---|---|---|---|---|---|---|---|---|---|
| | | | 1 | 2 | 3 | 4 | 5 | 6 | 7 | 8 | 9 | 10 | 11 | 12 | 13 | 14 | 15 | 16 | 17 | 18 | 19 | 20 | | Subgroup 1 $T_C$ = +25°C | | Subgroup 2 $T_C$ = +125°C | | Subgroup 3 $T_C$ = -55°C | | |
| | | Test no. | $\overline{1G}$ | 1A1 | 2Y4 | 1A2 | 2Y3 | 1A3 | 2Y2 | 1A4 | 2Y1 | GND | 2A1 | 1Y4 | 2A2 | 1Y3 | 2A3 | 1Y2 | 2A4 | 1Y1 | $\overline{2G}$ | $V_{CC}$ | | Min | Max | Min | Max | Min | Max | |
| $V_{IC}$ (pos) | | 1 | 1mA | | | | | | | | | OPEN | | | | | | | | | | GND | $\overline{1G}$ | 1/ | 1.5 | | | | | V |
| | | 2 | | 1mA | | | | | | | | " | | | | | | | | | | " | 1A1 | " | " | | | | | " |
| | | 3 | | | | 1mA | | | | | | " | | | | | | | | | | " | 1A2 | " | " | | | | | " |
| | | 4 | | | | | | 1mA | | | | " | | | | | | | | | | " | 1A3 | " | " | | | | | " |
| | | 5 | | | | | | | | 1mA | | " | | | | | | | | | | " | 1A4 | " | " | | | | | " |
| | | 6 | | | | | | | | | | " | 1mA | | | | | | | | | " | 2A1 | " | " | | | | | " |
| | | 7 | | | | | | | | | | " | | | 1mA | | | | | | | " | 2A2 | " | " | | | | | " |
| | | 8 | | | | | | | | | | " | | | | | 1mA | | | | | " | 2A3 | " | " | | | | | " |
| | | 9 | | | | | | | | | | " | | | | | | | 1mA | | | " | 2A4 | " | " | | | | | " |
| | | 10 | | | | | | | | | | " | | | | | | | | | 1mA | " | $\overline{2G}$ | " | " | | | | | " |
| $V_{IC}$ (neg) | | 11 | -1mA | | | | | | | | | GND | | | | | | | | | | OPEN | $\overline{1G}$ | | -1.5 | | | | | " |
| | | 12 | | -1mA | | | | | | | | " | | | | | | | | | | " | 1A1 | | " | | | | | " |
| | | 13 | | | | -1mA | | | | | | " | | | | | | | | | | " | 1A2 | | " | | | | | " |
| | | 14 | | | | | | -1mA | | | | " | | | | | | | | | | " | 1A3 | | " | | | | | " |
| | | 15 | | | | | | | | -1mA | | " | | | | | | | | | | " | 1A4 | | " | | | | | " |
| | | 16 | | | | | | | | | | " | -1mA | | | | | | | | | " | 2A1 | | " | | | | | " |
| | | 17 | | | | | | | | | | " | | | -1mA | | | | | | | " | 2A2 | | " | | | | | " |
| | | 18 | | | | | | | | | | " | | | | | -1mA | | | | | " | 2A3 | | " | | | | | " |
| | | 19 | | | | | | | | | | " | | | | | | | -1mA | | | " | 2A4 | | " | | | | | " |
| | | 20 | | | | | | | | | | " | | | | | | | | | -1mA | " | $\overline{2G}$ | | " | | | | | " |
| $I_{CCH}$ | 3005 | 21 | GND | 5.5V | | 5.5V | | 5.5V | | 5.5V | | " | 5.5V | | 5.5V | | 5.5V | | 5.5V | | GND | 5.5V | $V_{CC}$ | | 0.2 | | 20 | | | μA |
| $I_{CCL}$ | 3005 | 22 | GND | GND | | GND | | GND | | GND | | " | GND | | GND | | GND | | GND | | " | " | " | | 0.2 | | 20 | | | μA |
| $I_{CC}\Delta$ | 3011 | 223 | 2.4V | 0.4V | | 0.4V | | 0.4V | | 0.4V | | GND | 0.4V | | 0.4V | | 0.4V | | 0.4V | | " | " | " | | 3.0 | | 3.0 | | 3.0 | mA |
| | | 224 | GND | 2.4V | | " | | " | | " | | " | " | | " | | " | | " | | " | " | " | | " | | " | | " | | " |
| | | 225 | " | 0.4V | | 2.4V | | " | | " | | " | " | | " | | " | | " | | " | " | " | | " | | " | | " | | " |
| | | 226 | " | " | | 0.4V | | 2.4V | | " | | " | " | | " | | " | | " | | " | " | " | | " | | " | | " | | " |
| | | 227 | " | " | | " | | 0.4V | | 2.4V | | " | " | | " | | " | | " | | " | " | " | | " | | " | | " | | " |
| | | 228 | " | " | | " | | " | | 0.4V | | " | 2.4V | | " | | " | | " | | " | " | " | | " | | " | | " | | " |
| | | 229 | " | " | | " | | " | | " | | " | 0.4V | | 2.4V | | " | | " | | " | " | " | | " | | " | | " | | " |
| | | 230 | " | " | | " | | " | | " | | " | " | | 0.4V | | 2.4V | | " | | " | " | " | | " | | " | | " | | " |
| | | 231 | " | " | | " | | " | | " | | " | " | | " | | 0.4V | | 2.4V | | " | " | " | | " | | " | | " | | " |
| | | 232 | " | " | | " | | " | | " | | " | " | | " | | " | | 0.4V | | 2.4V | " | " | | " | | " | | " | | " |
| $I_{CCZ}$ | 3005 | 25 | 5.5V | 5.5V | | 5.5V | | 5.5V | | 5.5V | | " | GND | | GND | | GND | | GND | | GND | " | " | | 0.1 | | 10 | | | μA |
| | | 26 | GND | GND | | GND | | GND | | GND | | " | 5.5V | | 5.5V | | 5.5V | | 5.5V | | 5.5V | " | " | | 0.1 | | 10 | | | " |
| $V_{OH6}$ | 3006 | 27 | 0.8V | 2.0V | | | | | | | | " | | | | | | | | -20μA | | 4.5V | 1Y1 | 4.4 | | 4.4 | | 4.4 | | V |
| | | 28 | " | | | 2.0V | | | | | | " | | | | | | -20μA | | | | " | 1Y2 | " | | " | | " | | " |
| | | 29 | " | | | | | 2.0V | | | | " | | | | -20μA | | | | | | " | 1Y3 | " | | " | | " | | " |
| | | 30 | " | | | | | | | 2.0V | | " | | -20μA | | | | | | | | " | 1Y4 | " | | " | | " | | " |
| | | 31 | | | | | | | | | -20μA | " | 2.0V | | | | | | | | 0.8V | " | 2Y1 | " | | " | | " | | " |
| | | 32 | | | | | | | -20μA | | | " | | | 2.0V | | | | | | " | " | 2Y2 | " | | " | | " | | " |
| | | 33 | | | | | -20μA | | | | | " | | | | | 2.0V | | | | " | " | 2Y3 | " | | " | | " | | " |
| | | 34 | | | -20μA | | | | | | | " | | | | | | | 2.0V | | " | " | 2Y4 | " | | " | | " | | " |
| $V_{OH7}$ | 3006 | 35 | 0.8V | 2.0V | | | | | | | | " | | | | | | | | -6.0mA | | 5.5V | 1Y1 | 3.98 | | 3.7 | | 3.98 | | " |
| | | 36 | " | | | 2.0V | | | | | | " | | | | | | -6.0mA | | | | " | 1Y2 | " | | " | | " | | " |
| | | 37 | " | | | | | 2.0V | | | | " | | | | -6.0mA | | | | | | " | 1Y3 | " | | " | | " | | " |
| | | 38 | " | | | | | | | 2.0V | | " | | -6.0mA | | | | | | | | " | 1Y4 | " | | " | | " | | " |
| | | 39 | | | | | | | | | -6.0mA | " | 2.0V | | | | | | | | 0.8V | " | 2Y1 | " | | " | | " | | " |
| | | 40 | | | | | | | -6.0mA | | | " | | | 2.0V | | | | | | " | " | 2Y2 | " | | " | | " | | " |
| | | 41 | | | | | -6.0mA | | | | | " | | | | | 2.0V | | | | " | " | 2Y3 | " | | " | | " | | " |
| | | 42 | | | -6.0mA | | | | | | | " | | | | | | | 2.0V | | " | " | 2Y4 | " | | " | | " | | " |
| $V_{OL6}$ | 3007 | 43 | 0.8V | 0.8V | | | | | | | | " | | | | | | | | 20μA | | 4.5V | 1Y1 | | 0.1 | | 0.1 | | 0.1 | " |
| | | 44 | " | | | 0.8V | | | | | | " | | | | | | 20μA | | | | " | 1Y2 | | " | | " | | " | " |
| | | 45 | " | | | | | 0.8V | | | | " | | | | 20μA | | | | | | " | 1Y3 | | " | | " | | " | " |
| | | 46 | " | | | | | | | 0.8V | | " | | 20μA | | | | | | | | " | 1Y4 | | " | | " | | " | " |
| | | 47 | | | | | | | | | 20μA | " | 0.8V | | | | | | | | 0.8V | " | 2Y1 | | " | | " | | " | " |
| | | 48 | | | | | | | 20μA | | | " | | | 0.8V | | | | | | " | " | 2Y2 | | " | | " | | " | " |
| | | 49 | | | | | 20μA | | | | | " | | | | | 0.8V | | | | " | " | 2Y3 | | " | | " | | " | " |
| | | 50 | | | 20μA | | | | | | | " | | | | | | | 0.8V | | " | " | 2Y4 | | " | | " | | " | " |
| $V_{OL7}$ | 3007 | 51 | 0.8V | 0.8V | | | | | | | | " | | | | | | | | 6.0mA | | 5.5V | 1Y1 | | 0.26 | | 0.4 | | 0.26 | " |
| | | 52 | " | | | 0.8V | | | | | | " | | | | | | 6.0mA | | | | " | 1Y2 | | " | | " | | " | " |
| | | 53 | " | | | | | 0.8V | | | | " | | | | 6.0mA | | | | | | " | 1Y3 | | " | | " | | " | " |
| | | 54 | " | | | | | | | 0.8V | | " | | 6.0mA | | | | | | | | " | 1Y4 | | " | | " | | " | " |
| | | 55 | | | | | | | | | 6.0mA | " | 0.8V | | | | | | | | 0.8V | " | 2Y1 | | " | | " | | " | " |
| | | 56 | | | | | | | 6.0mA | | | " | | | 0.8V | | | | | | " | " | 2Y2 | | " | | " | | " | " |
| | | 57 | | | | | 6.0mA | | | | | " | | | | | 0.8V | | | | " | " | 2Y3 | | " | | " | | " | " |
| | | 58 | | | 6.0mA | | | | | | | " | | | | | | | 0.8V | | " | " | 2Y4 | | " | | " | | " | " |

See footnotes at end of table.

TABLE III. Group A inspection for device type 55 – Continued.

| Symbol | MIL-STD-883 method | Cases R, S, and 2 | Terminal conditions 1/ | | | | | | | | | | | | | | | | | | | | Measured terminal | Test limits | | | | | | Unit |
|---|---|---|---|---|---|---|---|---|---|---|---|---|---|---|---|---|---|---|---|---|---|---|---|---|---|---|---|---|---|---|
| | | | 1 | 2 | 3 | 4 | 5 | 6 | 7 | 8 | 9 | 10 | 11 | 12 | 13 | 14 | 15 | 16 | 17 | 18 | 19 | 20 | | Subgroup 1 $T_C$ = +25°C | | Subgroup 2 $T_C$ = +125°C | | Subgroup 3 $T_C$ = -55°C | | |
| | | Test no. | $\overline{1G}$ | 1A1 | 2Y4 | 1A2 | 2Y3 | 1A3 | 2Y2 | 1A4 | 2Y1 | GND | 2A1 | 1Y4 | 2A2 | 1Y3 | 2A3 | 1Y2 | 2A4 | 1Y1 | $\overline{2G}$ | $V_{CC}$ | | Min | Max | Min | Max | Min | Max | |
| $I_{OZH}$ | | 59 | 9/ | 9/ | | | | | | | | GND | | | | | | | | 5.5V | | 5.5V | 1Y1 | | 0.2 | | 2.0 | | | µA |
| | | 60 | " | | | 9/ | | | | | | " | | | | | | 5.5V | | | | " | 1Y2 | | " | | " | | | " |
| | | 61 | " | | | | | 9/ | | | | " | | | | 5.5V | | | | | | " | 1Y3 | | " | | " | | | " |
| | | 62 | " | | | | | | | 9/ | | " | | 5.5V | | | | | | | | " | 1Y4 | | " | | " | | | " |
| | | 63 | | | | | | | | | 5.5V | " | 9/ | | | | | | | | 9/ | " | 2Y1 | | " | | " | | | " |
| | | 64 | | | | | | | 5.5V | | | " | | | 9/ | | | | | | " | " | 2Y2 | | " | | " | | | " |
| | | 65 | | | | | 5.5V | | | | | " | | | | | 9/ | | | | | " | 2Y3 | | " | | " | | | " |
| | | 66 | | | 5.5V | | | | | | | " | | | | | | | 9/ | | " | " | 2Y4 | | " | | " | | | " |
| $I_{OZL}$ | | 67 | 9/ | 9/ | | | | | | | | " | | | | | | | | GND | | " | 1Y1 | | -0.2 | | -2.0 | | | " |
| | | 68 | " | | | 9/ | | | | | | " | | | | | | GND | | | | " | 1Y2 | | " | | " | | | " |
| | | 69 | " | | | | | 9/ | | | | " | | | | GND | | | | | | " | 1Y3 | | " | | " | | | " |
| | | 70 | " | | | | | | | 9/ | | " | | GND | | | | | | | | " | 1Y4 | | " | | " | | | " |
| | | 71 | | | | | | | | | GND | " | 9/ | | | | | | | | 9/ | " | 2Y1 | | " | | " | | | " |
| | | 72 | | | | | | | GND | | | " | | | 9/ | | | | | | " | " | 2Y2 | | " | | " | | | " |
| | | 73 | | | | | GND | | | | | " | | | | | 9/ | | | | | " | 2Y3 | | " | | " | | | " |
| | | 74 | | | GND | | | | | | | " | | | | | | | 9/ | | " | " | 2Y4 | | " | | " | | | " |
| $I_{IH}$ | 3010 | 75 | 5.5V | GND | | GND | | GND | | GND | | " | GND | | GND | | GND | | GND | | GND | " | $\overline{1G}$ | | .05 | | 0.1 | | | " |
| | | 76 | GND | 5.5V | | GND | | " | | " | | " | " | | " | | " | | " | | " | " | 1A1 | | " | | " | | | " |
| | | 77 | " | GND | | 5.5V | | | | | | " | | | | | | | | | | " | 1A2 | | " | | " | | | " |
| | | 78 | " | " | | GND | | 5.5V | | " | | " | " | | " | | " | | " | | " | " | 1A3 | | " | | " | | | " |
| | | 79 | " | " | | " | | GND | | 5.5V | | " | " | | " | | " | | " | | " | " | 1A4 | | " | | " | | | " |
| | | 80 | " | " | | " | | " | | GND | | " | 5.5V | | " | | " | | " | | " | " | 2A1 | | " | | " | | | " |
| | | 81 | " | " | | " | | " | | " | | " | GND | | 5.5V | | " | | " | | " | " | 2A2 | | " | | " | | | " |
| | | 82 | " | " | | " | | " | | " | | " | " | | GND | | 5.5V | | " | | " | " | 2A3 | | " | | " | | | " |
| | | 83 | " | " | | " | | " | | " | | " | " | | " | | GND | | 5.5V | | " | " | 2A4 | | " | | " | | | " |
| | | 84 | " | " | | " | | " | | " | | " | " | | " | | GND | | GND | | 5.5V | " | $\overline{2G}$ | | " | | " | | | " |
| $I_{IL}$ | 3009 | 85 | " | 5.5V | | 5.5V | | 5.5V | | 5.5V | | " | 5.5V | | 5.5V | | 5.5V | | 5.5V | | " | " | $\overline{1G}$ | | -.05 | | -0.1 | | | " |
| | | 86 | 5.5V | GND | | 5.5V | | " | | " | | " | " | | " | | " | | " | | " | " | 1A1 | | " | | " | | | " |
| | | 87 | " | 5.5V | | GND | | " | | | | " | | | " | | " | | " | | " | " | 1A2 | | " | | " | | | " |
| | | 88 | " | " | | 5.5V | | GND | | " | | " | " | | " | | " | | " | | " | " | 1A3 | | " | | " | | | " |
| | | 89 | " | " | | " | | 5.5V | | GND | | " | " | | " | | " | | " | | " | " | 1A4 | | " | | " | | | " |
| | | 90 | " | " | | " | | " | | 5.5V | | " | GND | | " | | " | | " | | " | " | 2A1 | | " | | " | | | " |
| | | 91 | " | " | | " | | " | | " | | " | 5.5V | | GND | | " | | " | | " | " | 2A2 | | " | | " | | | " |
| | | 92 | " | " | | " | | " | | " | | " | " | | 5.5V | | GND | | " | | " | " | 2A3 | | " | | " | | | " |
| | | 93 | " | " | | " | | " | | " | | " | " | | " | | 5.5V | | GND | | " | " | 2A4 | | " | | " | | | " |
| | | 94 | " | " | | " | | " | | " | | " | " | | " | | 5.5V | | 5.5V | | GND | " | $\overline{2G}$ | | " | | " | | | " |
| $I_{OS4}$ | 3011 | 95 | GND | 4V | | 4V | | 4V | | 4V | | " | 4V | | 4V | | 4V | | 4V | GND | | 4V | 1Y1 | -10 | -135 | -10 | -135 | -10 | -135 | mA |
| | | 96 | " | " | | " | | " | | " | | " | " | | " | | " | GND | " | | | " | 1Y2 | " | " | " | " | " | " | " |
| | | 97 | " | " | | " | | " | | " | | " | " | | " | GND | " | | " | | | " | 1Y3 | " | " | " | " | " | " | " |
| | | 98 | " | " | | " | | " | | " | | " | " | GND | " | | " | | " | | | " | 1Y4 | " | " | " | " | " | " | " |
| | | 99 | | " | | " | | " | | " | GND | " | " | | " | | " | | " | | GND | " | 2Y1 | " | " | " | " | " | " | " |
| | | 100 | | " | | " | | " | GND | " | | " | " | | " | | " | | " | | " | " | 2Y2 | " | " | " | " | " | " | " |
| | | 101 | | " | | " | GND | " | | " | | " | " | | " | | " | | " | | " | " | 2Y3 | " | " | " | " | " | " | " |
| | | 102 | | | GND | " | | " | | " | | " | " | | " | | " | | " | | " | " | 2Y4 | " | " | " | " | " | " | " |
| | | | | | | | | | | | | | | | | | | | | | | | | Subgroup 4 $T_C$ = +25°C | | | | | | |
| | | | | | | | | | | | | | | | | | | | | | | | | Min | Max | | | | | |
| $C_i$ | 3012 | 103 | 2/ | | | | | | | | | GND | | | | | | | | | | GND | $\overline{1G}$ | | 10 | | | | | pF |
| | | 104 | | 2/ | | | | | | | | " | | | | | | | | | | " | 1A1 | | " | | | | | " |
| | | 105 | | | | 2/ | | | | | | " | | | | | | | | | | " | 1A2 | | " | | | | | " |
| | | 106 | | | | | | 2/ | | | | " | | | | | | | | | | " | 1A3 | | " | | | | | " |
| | | 107 | | | | | | | | 2/ | | " | | | | | | | | | | " | 1A4 | | " | | | | | " |
| | | 108 | | | | | | | | | | " | 2/ | | | | | | | | | " | 2A1 | | " | | | | | " |
| | | 109 | | | | | | | | | | " | | | 2/ | | | | | | | " | 2A2 | | " | | | | | " |
| | | 110 | | | | | | | | | | " | | | | | 2/ | | | | | " | 2A3 | | " | | | | | " |
| | | 111 | | | | | | | | | | " | | | | | | | 2/ | | | " | 2A4 | | " | | | | | " |
| | | 112 | | | | | | | | | | " | | | | | | | | | 2/ | " | $\overline{2G}$ | | " | | | | | " |
| $C_o$ | 3012 | 113 | 5.5V | | | | | | | | | " | | 2/ | | 2/ | | 2/ | | 2/ | GND | 5.5V | 1Y's | | 20 | | | | | " |
| | | 114 | GND | | 2/ | | 2/ | | 2/ | | 2/ | " | | | | | | | | | 5.5V | 5.5V | 2Y's | | 20 | | | | | " |

See footnotes at end of table.

TABLE III. Group A inspection for device type 55 – Continued.

| Symbol | MIL-STD-883 method | Cases R, S, and 2 | Terminal conditions 1/ | | | | | | | | | | | | | | | | | | | | Measured terminal | Test limits | | | | | | Unit |
|---|---|---|---|---|---|---|---|---|---|---|---|---|---|---|---|---|---|---|---|---|---|---|---|---|---|---|---|---|---|---|
| | | | 1 | 2 | 3 | 4 | 5 | 6 | 7 | 8 | 9 | 10 | 11 | 12 | 13 | 14 | 15 | 16 | 17 | 18 | 19 | 20 | | Subgroup 7 $T_C$ = +25°C | | Subgroup 8 $T_C$ = +125°C | | Subgroup 8 $T_C$ = -55°C | | |
| | | Test no. | $\overline{1G}$ | 1A1 | 2Y4 | 1A2 | 2Y3 | 1A3 | 2Y2 | 1A4 | 2Y1 | GND | 2A1 | 1Y4 | 2A2 | 1Y3 | 2A3 | 1Y2 | 2A4 | 1Y1 | $\overline{2G}$ | $V_{CC}$ | | Min | Max | Min | Max | Min | Max | |
| Truth table | 3014 8/ | 115 | B | B | L | B | L | B | L | B | L | GND | B | L | B | L | B | L | B | L | B | 4.5V | 7/ | | | | | | | |
| | | 116 | B | A | H | A | H | A | H | A | H | GND | A | H | A | H | A | H | A | H | B | 4.5V | 7/ | | | | | | | |
| | | | | | | | | | | | | | | | | | | | | | | | | Subgroup 9 $T_C$ = +25°C | | Subgroup 10 $T_C$ = +125°C | | Subgroup 11 $T_C$ = -55°C | | |
| | | | | | | | | | | | | | | | | | | | | | | | | Min | Max | Min | Max | Min | Max | |
| $t_{PHL}$ | 3003 (Fig. 3) | 117 | GND | IN | | | | | | | | GND | | | | | | | | OUT | | 4.5V | 1A1 to 1Y1 | 8 | 25 | 8 | 33 | 8 | 25 | ns |
| | | 118 | " | | | IN | | | | | | " | | | | | | OUT | | | | " | 1A2 to 1Y2 | " | " | " | " | " | " | " |
| | | 119 | " | | | | | IN | | | | " | | | | OUT | | | | | | " | 1A3 to 1Y3 | " | " | " | " | " | " | " |
| | | 120 | " | | | | | | | IN | | " | | OUT | | | | | | | | " | 1A4 to 1Y4 | " | " | " | " | " | " | " |
| | | 121 | | | | | | | | | OUT | " | IN | | | | | | | | GND | " | 2A1 to 2Y1 | " | " | " | " | " | " | " |
| | | 122 | | | | | | | OUT | | | " | | | IN | | | | | | " | " | 2A2 to 2Y2 | " | " | " | " | " | " | " |
| | | 123 | | | | | OUT | | | | | " | | | | | IN | | | | " | " | 2A3 to 2Y3 | " | " | " | " | " | " | " |
| | | 124 | | | OUT | | | | | | | " | | | | | | | IN | | " | " | 2A4 to 2Y4 | " | " | " | " | " | " | " |
| $t_{PLH}$ | 3003 (Fig. 3) | 125 | GND | IN | | | | | | | | " | | | | | | | | OUT | | " | 1A1 to 1Y1 | " | " | " | " | " | " | " |
| | | 126 | " | | | IN | | | | | | " | | | | | | OUT | | | | " | 1A2 to 1Y2 | " | " | " | " | " | " | " |
| | | 127 | " | | | | | IN | | | | " | | | | OUT | | | | | | " | 1A3 to 1Y3 | " | " | " | " | " | " | " |
| | | 128 | " | | | | | | | IN | | " | | OUT | | | | | | | | " | 1A4 to 1Y4 | " | " | " | " | " | " | " |
| | | 129 | | | | | | | | | OUT | " | IN | | | | | | | | GND | " | 2A1 to 2Y1 | " | " | " | " | " | " | " |
| | | 130 | | | | | | | OUT | | | " | | | IN | | | | | | " | " | 2A2 to 2Y2 | " | " | " | " | " | " | " |
| | | 131 | | | | | OUT | | | | | " | | | | | IN | | | | " | " | 2A3 to 2Y3 | " | " | " | " | " | " | " |
| | | 132 | | | OUT | | | | | | | " | | | | | | | IN | | " | " | 2A4 to 2Y4 | " | " | " | " | " | " | " |
| $t_{PZL}$ | 3003 (Fig. 3) | 133 | IN | GND | | | | | | | | " | | | | | | | | OUT | | " | $\overline{1G}$ to 1Y1 | " | 31 | " | 41 | " | 31 | " |
| | | 134 | " | | | GND | | | | | | " | | | | | | OUT | | | | " | $\overline{1G}$ to 1Y2 | " | " | " | " | " | " | " |
| | | 135 | " | | | | | GND | | | | " | | | | OUT | | | | | | " | $\overline{1G}$ to 1Y3 | " | " | " | " | " | " | " |
| | | 136 | " | | | | | | | GND | | " | | OUT | | | | | | | | " | $\overline{1G}$ to 1Y4 | " | " | " | " | " | " | " |
| | | 137 | | | | | | | | | OUT | " | GND | | | | | | | | IN | " | $\overline{2G}$ to 2Y1 | " | " | " | " | " | " | " |
| | | 138 | | | | | | | OUT | | | " | | | GND | | | | | | " | " | $\overline{2G}$ to 2Y2 | " | " | " | " | " | " | " |
| | | 139 | | | | | OUT | | | | | " | | | | | GND | | | | " | " | $\overline{2G}$ to 2Y3 | " | " | " | " | " | " | " |
| | | 140 | | | OUT | | | | | | | " | | | | | | | GND | | " | " | $\overline{2G}$ to 2Y4 | " | " | " | " | " | " | " |
| $t_{PZH}$ | 3003 (Fig. 3) | 141 | IN | 4.5V | | | | | | | | GND | | | | | | | | OUT | | 4.5V | $\overline{1G}$ to 1Y1 | 8 | 31 | 8 | 41 | 8 | 31 | ns |
| | | 142 | " | | | 4.5V | | | | | | " | | | | | | OUT | | | | " | $\overline{1G}$ to 1Y2 | " | " | " | " | " | " | " |
| | | 143 | " | | | | | 4.5V | | | | " | | | | OUT | | | | | | " | $\overline{1G}$ to 1Y3 | " | " | " | " | " | " | " |
| | | 144 | " | | | | | | | 4.5V | | " | | OUT | | | | | | | | " | $\overline{1G}$ to 1Y4 | " | " | " | " | " | " | " |
| | | 145 | | | | | | | | | OUT | " | 4.5V | | | | | | | | IN | " | $\overline{2G}$ to 2Y1 | " | " | " | " | " | " | " |
| | | 146 | | | | | | | OUT | | | " | | | 4.5V | | | | | | " | " | $\overline{2G}$ to 2Y2 | " | " | " | " | " | " | " |
| | | 147 | | | | | OUT | | | | | " | | | | | 4.5V | | | | " | " | $\overline{2G}$ to 2Y3 | " | " | " | " | " | " | " |
| | | 148 | | | OUT | | | | | | | " | | | | | | | 4.5V | | " | " | $\overline{2G}$ to 2Y4 | " | " | " | " | " | " | " |
| $t_{PLZ}$ | 3003 (Fig. 3) | 149 | IN | GND | | | | | | | | " | | | | | | | | OUT | | " | $\overline{1G}$ to 1Y1 | " | " | " | " | " | " | " |
| | | 150 | " | | | GND | | | | | | " | | | | | | OUT | | | | " | $\overline{1G}$ to 1Y2 | " | " | " | " | " | " | " |
| | | 151 | " | | | | | GND | | | | " | | | | OUT | | | | | | " | $\overline{1G}$ to 1Y3 | " | " | " | " | " | " | " |
| | | 152 | " | | | | | | | GND | | " | | OUT | | | | | | | | " | $\overline{1G}$ to 1Y4 | " | " | " | " | " | " | " |
| | | 153 | | | | | | | | | OUT | " | GND | | | | | | | | IN | " | $\overline{2G}$ to 2Y1 | " | " | " | " | " | " | " |
| | | 154 | | | | | | | OUT | | | " | | | GND | | | | | | " | " | $\overline{2G}$ to 2Y2 | " | " | " | " | " | " | " |
| | | 155 | | | | | OUT | | | | | " | | | | | GND | | | | " | " | $\overline{2G}$ to 2Y3 | " | " | " | " | " | " | " |
| | | 156 | | | OUT | | | | | | | " | | | | | | | GND | | " | " | $\overline{2G}$ to 2Y4 | " | " | " | " | " | " | " |
| $t_{PHZ}$ | 3003 (Fig. 3) | 157 | IN | 4.5V | | | | | | | | " | | | | | | | | OUT | | " | $\overline{1G}$ to 1Y1 | " | " | " | " | " | " | " |
| | | 158 | " | | | 4.5V | | | | | | " | | | | | | OUT | | | | " | $\overline{1G}$ to 1Y2 | " | " | " | " | " | " | " |
| | | 159 | " | | | | | 4.5V | | | | " | | | | OUT | | | | | | " | 1G to 1Y3 | " | " | " | " | " | " | " |
| | | 160 | " | | | | | | | 4.5V | | " | | OUT | | | | | | | | " | $\overline{1G}$ to 1Y4 | " | " | " | " | " | " | " |
| | | 161 | | | | | | | | | OUT | " | 4.5V | | | | | | | | IN | " | $\overline{2G}$ to 2Y1 | " | " | " | " | " | " | " |
| | | 162 | | | | | | | OUT | | | " | | | 4.5V | | | | | | " | " | $\overline{2G}$ to 2Y2 | " | " | " | " | " | " | " |
| | | 163 | | | | | OUT | | | | | " | | | | | 4.5V | | | | " | " | $\overline{2G}$ to 2Y3 | " | " | " | " | " | " | " |
| | | 164 | | | OUT | | | | | | | " | | | | | | | 4.5V | | " | " | $\overline{2G}$ to 2Y4 | " | " | " | " | " | " | " |

See footnotes at end of table.

TABLE III. Group A inspection for device type 55 – Continued.

| Symbol | MIL-STD-883 method | Cases R, S, and 2 | Terminal conditions 1/ | | | | | | | | | | | | | | | | | | | | Measured terminal | Test limits | | | | | | Unit |
|---|---|---|---|---|---|---|---|---|---|---|---|---|---|---|---|---|---|---|---|---|---|---|---|---|---|---|---|---|---|---|
| | | | 1 | 2 | 3 | 4 | 5 | 6 | 7 | 8 | 9 | 10 | 11 | 12 | 13 | 14 | 15 | 16 | 17 | 18 | 19 | 20 | | Subgroup 9 $T_C$ = +25°C | | Subgroup 10 $T_C$ = +125°C | | Subgroup 11 $T_C$ = -55°C | | |
| | | Test no. | $\overline{1G}$ | 1A1 | 2Y4 | 1A2 | 2Y3 | 1A3 | 2Y2 | 1A4 | 2Y1 | GND | 2A1 | 1Y4 | 2A2 | 1Y3 | 2A3 | 1Y2 | 2A4 | 1Y1 | $\overline{2G}$ | $V_{CC}$ | | Min | Max | Min | Max | Min | Max | |
| $t_{TLH}$ | 3004 (Fig. 3) | 165 | GND | IN | | | | | | | | GND | | | | | | | | OUT | | 4.5V | 1Y1 | 2 | 12 | 2 | 16 | 2 | 12 | ns |
| | | 166 | " | | | IN | | | | | | " | | | | | | OUT | | | | " | 1Y2 | " | " | " | " | " | " | " |
| | | 167 | " | | | | | IN | | | | " | | | | OUT | | | | | | " | 1Y3 | " | " | " | " | " | " | " |
| | | 168 | " | | | | | | | IN | | " | | OUT | | | | | | | | " | 1Y4 | " | " | " | " | " | " | " |
| | | 169 | | | | | | | | | OUT | " | IN | | | | | | | | GND | " | 2Y1 | " | " | " | " | " | " | " |
| | | 170 | | | | | | | OUT | | | " | | | IN | | | | | | " | " | 2Y2 | " | " | " | " | " | " | " |
| | | 171 | | | | | OUT | | | | | " | | | | | IN | | | | " | " | 2Y3 | " | " | " | " | " | " | " |
| | | 172 | | | OUT | | | | | | | " | | | | | | | IN | | " | " | 2Y4 | " | " | " | " | " | " | " |
| $t_{THL}$ | 3004 (Fig. 3) | 173 | GND | IN | | | | | | | | " | | | | | | | | OUT | | " | 1Y1 | " | " | " | " | " | " | " |
| | | 174 | " | | | IN | | | | | | " | | | | | | OUT | | | | " | 1Y2 | " | " | " | " | " | " | " |
| | | 175 | " | | | | | IN | | | | " | | | | OUT | | | | | | " | 1Y3 | " | " | " | " | " | " | " |
| | | 176 | " | | | | | | | IN | | " | | OUT | | | | | | | | " | 1Y4 | " | " | " | " | " | " | " |
| | | 177 | | | | | | | | | OUT | " | IN | | | | | | | | GND | " | 2Y1 | " | " | " | " | " | " | " |
| | | 178 | | | | | | | OUT | | | " | | | IN | | | | | | " | " | 2Y2 | " | " | " | " | " | " | " |
| | | 179 | | | | | OUT | | | | | " | | | | | IN | | | | " | " | 2Y3 | " | " | " | " | " | " | " |
| | | 180 | | | OUT | | | | | | | " | | | | | | | IN | | " | " | 2Y4 | " | " | " | " | " | " | " |

See footnotes at end of table.

TABLE III. Group A inspection for device type 60.

| Symbol | MIL-STD-883 method | Cases R, S, and 2 | Terminal conditions 1/ | | | | | | | | | | | | | | | | | | | | Measured terminal | Test limits | | | | | | Unit |
|---|---|---|---|---|---|---|---|---|---|---|---|---|---|---|---|---|---|---|---|---|---|---|---|---|---|---|---|---|---|---|
| | | | 1 | 2 | 3 | 4 | 5 | 6 | 7 | 8 | 9 | 10 | 11 | 12 | 13 | 14 | 15 | 16 | 17 | 18 | 19 | 20 | | Subgroup 1 $T_C$ = +25°C | | Subgroup 2 $T_C$ = +125°C | | Subgroup 3 $T_C$ = -55°C | | |
| | | Test no. | $\overline{1G}$ | 1A | 2A | 3A | 4A | 5A | 6A | 7A | 8A | GND | $\overline{8Y}$ | $\overline{7Y}$ | $\overline{6Y}$ | $\overline{5Y}$ | $\overline{4Y}$ | $\overline{3Y}$ | $\overline{2Y}$ | $\overline{1Y}$ | $\overline{2G}$ | $V_{CC}$ | | Min | Max | Min | Max | Min | Max | |
| $V_{IC}$ (pos) | | 1 | 1mA | | | | | | | | | OPEN | | | | | | | | | | GND | $\overline{1G}$ | 1/ | 1.5 | | | | | V |
| | | 2 | | 1mA | | | | | | | | " | | | | | | | | | | " | 1A | " | " | | | | | " |
| | | 3 | | | 1mA | | | | | | | " | | | | | | | | | | " | 2A | " | " | | | | | " |
| | | 4 | | | | 1mA | | | | | | " | | | | | | | | | | " | 3A | " | " | | | | | " |
| | | 5 | | | | | 1mA | | | | | " | | | | | | | | | | " | 4A | " | " | | | | | " |
| | | 6 | | | | | | 1mA | | | | " | | | | | | | | | | " | 5A | " | " | | | | | " |
| | | 7 | | | | | | | 1mA | | | " | | | | | | | | | | " | 6A | " | " | | | | | " |
| | | 8 | | | | | | | | 1mA | | " | | | | | | | | | | " | 7A | " | " | | | | | " |
| | | 9 | | | | | | | | | 1mA | " | | | | | | | | | | " | $\overline{8A}$ | " | " | | | | | " |
| | | 10 | | | | | | | | | | " | | | | | | | | | 1mA | " | $\overline{2G}$ | " | " | | | | | " |
| $V_{IC}$ (neg) | | 11 | -1mA | | | | | | | | | GND | | | | | | | | | | OPEN | $\overline{1G}$ | | -1.5 | | | | | " |
| | | 12 | | -1mA | | | | | | | | " | | | | | | | | | | " | 1A | | " | | | | | " |
| | | 13 | | | -1mA | | | | | | | " | | | | | | | | | | " | 2A | | " | | | | | " |
| | | 14 | | | | -1mA | | | | | | " | | | | | | | | | | " | 3A | | " | | | | | " |
| | | 15 | | | | | -1mA | | | | | " | | | | | | | | | | " | 4A | | " | | | | | " |
| | | 16 | | | | | | -1mA | | | | " | | | | | | | | | | " | 5A | | " | | | | | " |
| | | 17 | | | | | | | -1mA | | | " | | | | | | | | | | " | 6A | | " | | | | | " |
| | | 18 | | | | | | | | -1mA | | " | | | | | | | | | | " | 7A | | " | | | | | " |
| | | 19 | | | | | | | | | -1mA | " | | | | | | | | | | " | 8A | | " | | | | | " |
| | | 20 | | | | | | | | | | " | | | | | | | | | -1mA | " | $\overline{2G}$ | | " | | | | | " |
| $I_{CC}$ | 3005 | 21 | GND | GND | GND | GND | GND | GND | GND | GND | GND | " | | | | | | | | | GND | 5.5V | $V_{CC}$ | | 0.2 | | 20 | | | µA |
| $I_{CC}$ | 3005 | 22 | GND | 5.5V | 5.5V | 5.5V | 5.5V | 5.5V | 5.5V | 5.5V | 5.5V | " | | | | | | | | | GND | " | " | | 0.2 | | 20 | | | µA |
| $I_{CC}\Delta$ | | 223 | 2.4V | 0.4V | 0.4V | 0.4V | 0.4V | 0.4V | 0.4V | 0.4V | 0.4V | " | | | | | | | | | " | " | " | | 3.0 | | 3.0 | | 3.0 | mA |
| | | 224 | GND | 2.4V | " | " | " | " | " | " | " | " | | | | | | | | | " | " | " | | " | | " | | " | " |
| | | 225 | " | 0.4V | 2.4V | " | " | " | " | " | " | " | | | | | | | | | " | " | " | | " | | " | | " | " |
| | | 226 | " | " | 0.4V | 2.4V | " | " | " | " | " | " | | | | | | | | | " | " | " | | " | | " | | " | " |
| | | 227 | " | " | " | 0.4V | 2.4V | " | " | " | " | " | | | | | | | | | " | " | " | | " | | " | | " | " |
| | | 228 | " | " | " | " | 0.4V | 2.4V | " | " | " | " | | | | | | | | | " | " | " | | " | | " | | " | " |
| | | 229 | " | " | " | " | " | 0.4V | 2.4V | " | " | " | | | | | | | | | " | " | " | | " | | " | | " | " |
| | | 230 | " | " | " | " | " | " | 0.4V | 2.4V | " | " | | | | | | | | | " | " | " | | " | | " | | " | " |
| | | 231 | " | " | " | " | " | " | " | 0.4V | 2.4V | " | | | | | | | | | " | " | " | | " | | " | | " | " |
| | | 232 | " | " | " | " | " | " | " | " | 0.4V | " | | | | | | | | | 2.4V | " | " | | " | | " | | " | " |
| $I_{CCZ}$ | | 25 | 5.5V | 5.5V | 5.5V | 5.5V | 5.5V | GND | GND | GND | GND | " | | | | | | | | | GND | " | " | | 0.1 | | 10 | | | µA |
| | | 26 | GND | GND | GND | GND | GND | 5.5V | 5.5V | 5.5V | 5.5V | " | | | | | | | | | 5.5V | " | " | | 0.1 | | 10 | | | µA |
| $V_{OH6}$ | 3006 | 27 | 0.8V | 0.8V | | | | | | | | " | | | | | | | | -20µA | 0.8V | 4.5V | $\overline{1Y}$ | 4.4 | | 4.4 | | 4.4 | | V |
| | | 28 | " | | 0.8V | | | | | | | " | | | | | | | -20µA | | " | " | $\overline{2Y}$ | " | | " | | " | | " |
| | | 29 | " | | | 0.8V | | | | | | " | | | | | | -20µA | | | " | " | $\overline{3Y}$ | " | | " | | " | | " |
| | | 30 | " | | | | 0.8V | | | | | " | | | | | -20µA | | | | " | " | $\overline{4Y}$ | " | | " | | " | | " |
| | | 31 | " | | | | | 0.8V | | | | " | | | | -20µA | | | | | " | " | $\overline{5Y}$ | " | | " | | " | | " |
| | | 32 | " | | | | | | 0.8V | | | " | | | -20µA | | | | | | " | " | $\overline{6Y}$ | " | | " | | " | | " |
| | | 33 | " | | | | | | | 0.8V | | " | | -20µA | | | | | | | " | " | $\overline{7Y}$ | " | | " | | " | | " |
| | | 34 | " | | | | | | | | 0.8V | " | -20µA | | | | | | | | " | " | $\overline{8Y}$ | " | | " | | " | | " |
| $V_{OH7}$ | 3006 | 35 | 0.8V | 0.8V | | | | | | | | " | | | | | | | | -6.0mA | " | 5.5V | $\overline{1Y}$ | 3.98 | | 3.7 | | 3.98 | | " |
| | | 36 | " | | 0.8V | | | | | | | " | | | | | | | -6.0mA | | " | " | $\overline{2Y}$ | " | | " | | " | | " |
| | | 37 | " | | | 0.8V | | | | | | " | | | | | | -6.0mA | | | " | " | $\overline{3Y}$ | " | | " | | " | | " |
| | | 38 | " | | | | 0.8V | | | | | " | | | | | -6.0mA | | | | " | " | $\overline{4Y}$ | " | | " | | " | | " |
| | | 39 | " | | | | | 0.8V | | | | " | | | | -6.0mA | | | | | " | " | $\overline{5Y}$ | " | | " | | " | | " |
| | | 40 | " | | | | | | 0.8V | | | " | | | -6.0mA | | | | | | " | " | $\overline{6Y}$ | " | | " | | " | | " |
| | | 41 | " | | | | | | | 0.8V | | " | | -6.0mA | | | | | | | " | " | $\overline{7Y}$ | " | | " | | " | | " |
| | | 42 | " | | | | | | | | 0.8V | " | -6.0mA | | | | | | | | " | " | 8Y | " | | " | | " | | " |
| $V_{OL6}$ | 3007 | 43 | 0.8V | 2.0V | | | | | | | | " | | | | | | | | 20µA | " | 4.5V | $\overline{1Y}$ | | 0.1 | | 0.1 | | 0.1 | " |
| | | 44 | " | | 2.0V | | | | | | | " | | | | | | | 20µA | | " | " | $\overline{2Y}$ | | " | | " | | " | " |
| | | 45 | " | | | 2.0V | | | | | | " | | | | | | 20µA | | | " | " | $\overline{3Y}$ | | " | | " | | " | " |
| | | 46 | " | | | | 2.0V | | | | | " | | | | | 20µA | | | | " | " | $\overline{4Y}$ | | " | | " | | " | " |
| | | 47 | " | | | | | 2.0V | | | | " | | | | 20µA | | | | | " | " | $\overline{5Y}$ | | " | | " | | " | " |
| | | 48 | " | | | | | | 2.0V | | | " | | | 20µA | | | | | | " | " | $\overline{6Y}$ | | " | | " | | " | " |
| | | 49 | " | | | | | | | 2.0V | | " | | 20µA | | | | | | | " | " | $\overline{7Y}$ | | " | | " | | " | " |
| | | 50 | " | | | | | | | | 2.0V | " | 20µA | | | | | | | | " | " | $\overline{8Y}$ | | " | | " | | " | " |

See footnotes at end of table.

TABLE III. Group A inspection for device type 60 – Continued.

| Symbol | MIL-STD-883 method | Cases R, S, and 2 | Terminal conditions 1/ | | | | | | | | | | | | | | | | | | | | Measured terminal | Test limits | | | | | | Unit |
|---|---|---|---|---|---|---|---|---|---|---|---|---|---|---|---|---|---|---|---|---|---|---|---|---|---|---|---|---|---|---|
| | | | 1 | 2 | 3 | 4 | 5 | 6 | 7 | 8 | 9 | 10 | 11 | 12 | 13 | 14 | 15 | 16 | 17 | 18 | 19 | 20 | | Subgroup 1 $T_C$ = +25°C | | Subgroup 2 $T_C$ = +125°C | | Subgroup 3 $T_C$ = -55°C | | |
| | | Test no. | $\overline{1G}$ | 1A | 2A | 3A | 4A | 5A | 6A | 7A | 8A | GND | $\overline{8Y}$ | $\overline{7Y}$ | $\overline{6Y}$ | $\overline{5Y}$ | $\overline{4Y}$ | $\overline{3Y}$ | $\overline{2Y}$ | $\overline{1Y}$ | $\overline{2G}$ | $V_{CC}$ | | Min | Max | Min | Max | Min | Max | |
| $V_{OL7}$ | 3007 | 51 | 0.8V | 2.0V | | | | | | | | GND | | | | | | | | 6.0mA | 0.8V | 5.5V | $\overline{1Y}$ | | 0.26 | | 0.4 | | 0.26 | V |
| | | 52 | " | | 2.0V | | | | | | | " | | | | | | | 6.0mA | | " | " | $\overline{2Y}$ | | " | | " | | " | " |
| | | 53 | " | | | 2.0V | | | | | | " | | | | | | 6.0mA | | | " | " | $\overline{3Y}$ | | " | | " | | " | " |
| | | 54 | " | | | | 2.0V | | | | | " | | | | | 6.0mA | | | | " | " | $\overline{4Y}$ | | " | | " | | " | " |
| | | 55 | " | | | | | 2.0V | | | | " | | | | 6.0mA | | | | | " | " | $\overline{5Y}$ | | " | | " | | " | " |
| | | 56 | " | | | | | | 2.0V | | | " | | | 6.0mA | | | | | | " | " | $\overline{6Y}$ | | " | | " | | " | " |
| | | 57 | " | | | | | | | 2.0V | | " | | 6.0mA | | | | | | | " | " | $\overline{7Y}$ | | " | | " | | " | " |
| | | 58 | " | | | | | | | | 2.0V | " | 6.0mA | | | | | | | | " | " | 8Y | | " | | " | | " | " |
| $I_{OZH}$ | | 59 | 0.8V | 9/ | | | | | | | | GND | | | | | | | | 5.5V | 9/ | 5.5V | $\overline{1Y}$ | | 0.2 | | 2.0 | | | µA |
| | | 60 | " | | 9/ | | | | | | | " | | | | | | | 5.5V | | " | " | $\overline{2Y}$ | | " | | " | | | " |
| | | 61 | " | | | 9/ | | | | | | " | | | | | | 5.5V | | | " | " | $\overline{3Y}$ | | " | | " | | | " |
| | | 62 | " | | | | 9/ | | | | | " | | | | | | | | | " | " | $\overline{4Y}$ | | " | | " | | | " |
| | | 63 | " | | | | | 9/ | | | | " | | | | 5.5V | | | | | " | " | $\overline{5Y}$ | | " | | " | | | " |
| | | 64 | " | | | | | | 9/ | | | " | | | 5.5V | | | | | | " | " | $\overline{6Y}$ | | " | | " | | | " |
| | | 65 | " | | | | | | | 9/ | | " | | 5.5V | | | | | | | " | " | $\overline{7Y}$ | | " | | " | | | " |
| | | 66 | " | | | | | | | | 9/ | " | 5.5V | | | | | | | | " | " | 8Y | | " | | " | | | " |
| $I_{OZL}$ | | 67 | 9/ | 9/ | | | | | | | | " | | | | | | | | GND | 0.8V | " | $\overline{1Y}$ | | -0.2 | | -2.0 | | | " |
| | | 68 | " | | 9/ | | | | | | | " | | | | | | | GND | | " | " | $\overline{2Y}$ | | " | | " | | | " |
| | | 69 | " | | | 9/ | | | | | | " | | | | | | GND | | | " | " | $\overline{3Y}$ | | " | | " | | | " |
| | | 70 | " | | | | 9/ | | | | | " | | | | | GND | | | | " | " | $\overline{4Y}$ | | " | | " | | | " |
| | | 71 | " | | | | | 9/ | | | | " | | | | GND | | | | | " | " | $\overline{5Y}$ | | " | | " | | | " |
| | | 72 | " | | | | | | 9/ | | | " | | | GND | | | | | | " | " | $\overline{6Y}$ | | " | | " | | | " |
| | | 73 | " | | | | | | | 9/ | | " | | GND | | | | | | | " | " | $\overline{7Y}$ | | " | | " | | | " |
| | | 74 | " | | | | | | | | 9/ | " | GND | | | | | | | | " | " | 8Y | | " | | " | | | " |
| $I_{IH}$ | 3010 | 75 | 5.5V | GND | GND | GND | GND | GND | GND | GND | GND | " | | | | | | | | | GND | " | $\overline{1G}$ | | .05 | | 0.1 | | | " |
| | | 76 | GND | 5.5V | GND | " | " | " | " | " | " | " | | | | | | | | | " | " | 1A | | " | | " | | | " |
| | | 77 | " | GND | 5.5V | " | " | " | " | " | " | " | | | | | | | | | " | " | 2A | | " | | " | | | " |
| | | 78 | " | " | GND | 5.5V | " | " | " | " | " | " | | | | | | | | | " | " | 3A | | " | | " | | | " |
| | | 79 | " | " | " | GND | 5.5V | " | " | " | " | " | | | | | | | | | " | " | 4A | | " | | " | | | " |
| | | 80 | " | " | " | " | GND | 5.5V | " | " | " | " | | | | | | | | | " | " | 5A | | " | | " | | | " |
| | | 81 | " | " | " | " | " | GND | 5.5V | " | " | " | | | | | | | | | " | " | 6A | | " | | " | | | " |
| | | 82 | " | " | " | " | " | " | GND | 5.5V | " | " | | | | | | | | | " | " | 7A | | " | | " | | | " |
| | | 83 | " | " | " | " | " | " | " | GND | 5.5V | " | | | | | | | | | " | " | 8A | | " | | " | | | " |
| | | 84 | " | " | " | " | " | " | " | GND | GND | " | | | | | | | | | 5.5V | " | 2G | | " | | " | | | " |
| $I_{IL}$ | 3009 | 85 | GND | 5.5V | 5.5V | 5.5V | 5.5V | 5.5V | 5.5V | 5.5V | 5.5V | " | | | | | | | | | " | " | $\overline{1G}$ | | -.05 | | -0.1 | | | " |
| | | 86 | 5.5V | GND | 5.5V | " | " | " | " | " | " | " | | | | | | | | | " | " | 1A | | " | | " | | | " |
| | | 87 | " | 5.5V | GND | " | " | " | " | " | " | " | | | | | | | | | " | " | 2A | | " | | " | | | " |
| | | 88 | " | " | 5.5V | GND | " | " | " | " | " | " | | | | | | | | | " | " | 3A | | " | | " | | | " |
| | | 89 | " | " | " | 5.5V | GND | " | " | " | " | " | | | | | | | | | " | " | 4A | | " | | " | | | " |
| | | 90 | " | " | " | " | 5.5V | GND | " | " | " | " | | | | | | | | | " | " | 5A | | " | | " | | | " |
| | | 91 | " | " | " | " | " | 5.5V | GND | " | " | " | | | | | | | | | " | " | 6A | | " | | " | | | " |
| | | 92 | " | " | " | " | " | " | 5.5V | GND | " | " | | | | | | | | | " | " | 7A | | " | | " | | | " |
| | | 93 | " | " | " | " | " | " | " | 5.5V | GND | " | | | | | | | | | " | " | 8A | | " | | " | | | " |
| | | 94 | " | " | " | " | " | " | " | 5.5V | 5.5V | " | | | | | | | | | GND | " | 2G | | " | | " | | | " |
| $I_{OS4}$ | 3011 | 95 | GND | GND | | | | | | | | GND | | | | | | | | GND | GND | 4V | $\overline{1Y}$ | -10 | -135 | -10 | -135 | -10 | -135 | mA |
| | | 96 | " | | GND | | | | | | | " | | | | | | | GND | | " | " | $\overline{2Y}$ | " | " | " | " | " | " | " |
| | | 97 | " | | | GND | | | | | | " | | | | | | GND | | | " | " | $\overline{3Y}$ | " | " | " | " | " | " | " |
| | | 98 | " | | | | GND | | | | | " | | | | | GND | | | | " | " | $\overline{4Y}$ | " | " | " | " | " | " | " |
| | | 99 | " | | | | | GND | | | | " | | | | GND | | | | | " | " | $\overline{5Y}$ | " | " | " | " | " | " | " |
| | | 100 | " | | | | | | GND | | | " | | | GND | | | | | | " | " | $\overline{6Y}$ | " | " | " | " | " | " | " |
| | | 101 | " | | | | | | | GND | | " | | GND | | | | | | | " | " | $\overline{7Y}$ | " | " | " | " | " | " | " |
| | | 102 | " | | | | | | | | GND | " | GND | | | | | | | | " | " | 8Y | " | " | " | " | " | " | " |

See footnotes at end of table.

TABLE III. Group A inspection for device type 60 – Continued.

| Symbol | MIL-STD-883 method | Cases R, S, and 2 | Terminal conditions 1/ | | | | | | | | | | | | | | | | | | | | Measured terminal | Test limits | | | | | | Unit |
|---|---|---|---|---|---|---|---|---|---|---|---|---|---|---|---|---|---|---|---|---|---|---|---|---|---|---|---|---|---|---|
| | | | 1 | 2 | 3 | 4 | 5 | 6 | 7 | 8 | 9 | 10 | 11 | 12 | 13 | 14 | 15 | 16 | 17 | 18 | 19 | 20 | | Subgroup 4 $T_C$ = +25°C | | | | | | |
| | | Test no. | $\overline{1G}$ | 1A | 2A | 3A | 4A | 5A | 6A | 7A | 8A | GND | $\overline{8Y}$ | $\overline{7Y}$ | $\overline{6Y}$ | $\overline{5Y}$ | $\overline{4Y}$ | $\overline{3Y}$ | $\overline{2Y}$ | $\overline{1Y}$ | $\overline{2G}$ | $V_{CC}$ | | Min | Max | Min | Max | Min | Max | |
| $C_i$ | 3012 | 103 | 2/ | | | | | | | | | GND | | | | | | | | | | GND | $\overline{1G}$ | | 10 | | | | | pF |
| | | 104 | | 2/ | | | | | | | | " | | | | | | | | | | " | 1A | | " | | | | | " |
| | | 105 | | | 2/ | | | | | | | " | | | | | | | | | | " | 2A | | " | | | | | " |
| | | 106 | | | | 2/ | | | | | | " | | | | | | | | | | " | 3A | | " | | | | | " |
| | | 107 | | | | | 2/ | | | | | " | | | | | | | | | | " | 4A | | " | | | | | " |
| | | 108 | | | | | | 2/ | | | | " | | | | | | | | | | " | 5A | | " | | | | | " |
| | | 109 | | | | | | | 2/ | | | " | | | | | | | | | | " | 6A | | " | | | | | " |
| | | 110 | | | | | | | | 2/ | | " | | | | | | | | | | " | 7A | | " | | | | | " |
| | | 111 | | | | | | | | | 2/ | " | | | | | | | | | | " | $\overline{8A}$ | | " | | | | | " |
| | | 112 | | | | | | | | | | " | | | | | | | | | 2/ | " | $\overline{2G}$ | | " | | | | | " |
| $C_o$ | 3012 | 113 | GND | | | | | | | | | " | | | | | 2/ | 2/ | 2/ | 2/ | 5.5V | 5.5V | $\overline{Y}$'s | | 20 | | | | | " |
| | | 114 | 5.5V | | | | | | | | | " | 2/ | 2/ | 2/ | 2/ | | | | | GND | 5.5V | Y's | | 20 | | | | | " |
| | | | | | | | | | | | | | | | | | | | | | | | | Subgroup 7 $T_C$ = +25°C | | Subgroup 8 $T_C$ = +125°C | | Subgroup 8 $T_C$ = -55°C | | |
| | | | | | | | | | | | | | | | | | | | | | | | | Min | Max | Min | Max | Min | Max | |
| Truth table | 8/ | 115 | B | B | B | B | B | B | B | B | B | GND | H | H | H | H | H | H | H | H | B | 4.5V | 7/ | | | | | | | |
| | | 116 | B | A | A | A | A | A | A | A | A | GND | L | L | L | L | L | L | L | L | B | 4.5V | 7/ | | | | | | | |
| | | | | | | | | | | | | | | | | | | | | | | | | Subgroup 9 $T_C$ = +25°C | | Subgroup 10 $T_C$ =+125°C | | Subgroup 11 $T_C$ = -55°C | | |
| | | | | | | | | | | | | | | | | | | | | | | | | Min | Max | Min | Max | Min | Max | |
| $t_{PHL}$ | 3003 (Fig. 3) | 117 | GND | IN | | | | | | | | GND | | | | | | | | OUT | GND | 4.5V | 1A to $\overline{1Y}$ | 10 | 26 | 10 | 35 | 10 | 26 | ns |
| | | 118 | " | | IN | | | | | | | " | | | | | | | OUT | | " | " | 2A to $\overline{2Y}$ | " | " | " | " | " | " | " |
| | | 119 | " | | | IN | | | | | | " | | | | | | OUT | | | " | " | 3A to $\overline{3Y}$ | " | " | " | " | " | " | " |
| | | 120 | " | | | | IN | | | | | " | | | | | OUT | | | | " | " | 4A to $\overline{4Y}$ | " | " | " | " | " | " | " |
| | | 121 | " | | | | | IN | | | | " | | | | OUT | | | | | " | " | 5A to $\overline{5Y}$ | " | " | " | " | " | " | " |
| | | 122 | " | | | | | | IN | | | " | | | OUT | | | | | | " | " | 6A to $\overline{6Y}$ | " | " | " | " | " | " | " |
| | | 123 | " | | | | | | | IN | | " | | OUT | | | | | | | " | " | 7A to $\overline{7Y}$ | " | " | " | " | " | " | " |
| | | 124 | " | | | | | | | | IN | " | OUT | | | | | | | | " | " | 8A to $\overline{8Y}$ | " | " | " | " | " | " | " |
| $t_{PLH}$ | 3003 (Fig. 3) | 125 | " | IN | | | | | | | | " | | | | | | | | OUT | " | " | 1A to $\overline{1Y}$ | " | " | " | " | " | " | " |
| | | 126 | " | | IN | | | | | | | " | | | | | | | OUT | | " | " | 2A to $\overline{2Y}$ | " | " | " | " | " | " | " |
| | | 127 | " | | | IN | | | | | | " | | | | | | OUT | | | " | " | 3A to $\overline{3Y}$ | " | " | " | " | " | " | " |
| | | 128 | " | | | | IN | | | | | " | | | | | OUT | | | | " | " | 4A to $\overline{4Y}$ | " | " | " | " | " | " | " |
| | | 129 | " | | | | | IN | | | | " | | | | OUT | | | | | " | " | 5A to $\overline{5Y}$ | " | " | " | " | " | " | " |
| | | 130 | " | | | | | | IN | | | " | | | OUT | | | | | | " | " | 6A to $\overline{6Y}$ | " | " | " | " | " | " | " |
| | | 131 | " | | | | | | | IN | | " | | OUT | | | | | | | " | " | 7A to $\overline{7Y}$ | " | " | " | " | " | " | " |
| | | 132 | " | | | | | | | | IN | " | OUT | | | | | | | | " | " | 8A to $\overline{8Y}$ | " | " | " | " | " | " | " |
| $t_{PZH}$ | 3003 (Fig. 3) | 133 | IN | GND | | | | | | | | " | | | | | | | OUT | OUT | " | " | $\overline{1G}$ to $\overline{1Y}$ | " | 40 | " | 53 | 7 | 40 | " |
| | | 134 | " | | GND | | | | | | | " | | | | | | | | | " | " | $\overline{1G}$ to $\overline{2Y}$ | " | " | " | " | " | " | " |
| | | 135 | " | | | GND | | | | | | " | | | | | | OUT | | | " | " | $\overline{1G}$ to $\overline{3Y}$ | " | " | " | " | " | " | " |
| | | 136 | " | | | | GND | | | | | " | | | | | OUT | | | | " | " | $\overline{1G}$ to $\overline{4Y}$ | " | " | " | " | " | " | " |
| | | 137 | " | | | | | GND | | | | " | | | | OUT | | | | | " | " | $\overline{1G}$ to $\overline{5Y}$ | " | " | " | " | " | " | " |
| | | 138 | " | | | | | | GND | | | " | | | OUT | | | | | | " | " | $\overline{1G}$ to $\overline{6Y}$ | " | " | " | " | " | " | " |
| | | 139 | " | | | | | | | GND | | " | | OUT | | | | | | | " | " | $\overline{1G}$ to $\overline{7Y}$ | " | " | " | " | " | " | " |
| | | 140 | " | | | | | | | | GND | " | OUT | | | | | | | | " | " | $\overline{1G}$ to $\overline{8Y}$ | " | " | " | " | " | " | " |
| | 3003 (Fig. 3) | 141 | GND | GND | | | | | | | | GND | | | | | | | OUT | OUT | IN | " | $\overline{2G}$ to $\overline{1Y}$ | " | " | " | 53 | 7 | " | " |
| | | 142 | " | | GND | | | | | | | " | | | | | | | | | " | " | $\overline{2G}$ to $\overline{2Y}$ | " | " | " | " | " | " | " |
| | | 143 | " | | | GND | | | | | | " | | | | | | OUT | | | " | " | $\overline{2G}$ to $\overline{3Y}$ | " | " | " | " | " | " | " |
| | | 144 | " | | | | GND | | | | | " | | | | | OUT | | | | " | " | $\overline{2G}$ to $\overline{4Y}$ | " | " | " | " | " | " | " |
| | | 145 | " | | | | | GND | | | | " | | | | OUT | | | | | " | " | $\overline{2G}$ to $\overline{5Y}$ | " | " | " | " | " | " | " |
| | | 146 | " | | | | | | GND | | | " | | | OUT | | | | | | " | " | $\overline{2G}$ to $\overline{6Y}$ | " | " | " | " | " | " | " |
| | | 147 | " | | | | | | | GND | | " | | OUT | | | | | | | " | " | $\overline{2G}$ to $\overline{7Y}$ | " | " | " | " | " | " | " |
| | | 148 | " | | | | | | | | GND | " | OUT | | | | | | | | " | " | $\overline{2G}$ to $\overline{8Y}$ | " | " | " | " | " | " | " |
| $t_{PZL}$ | 3003 (Fig. 3) | 149 | IN | 4.5V | | | | | | | | " | | | | | | | OUT | OUT | GND | " | $\overline{1G}$ to $\overline{1Y}$ | " | " | " | " | " | " | " |
| | | 150 | " | | 4.5V | | | | | | | " | | | | | | | | | " | " | $\overline{1G}$ to $\overline{2Y}$ | " | " | " | " | " | " | " |
| | | 151 | " | | | 4.5V | | | | | | " | | | | | | OUT | | | " | " | $\overline{1G}$ to $\overline{3Y}$ | " | " | " | " | " | " | " |
| | | 152 | " | | | | 4.5V | | | | | " | | | | | OUT | | | | " | " | $\overline{1G}$ to $\overline{4Y}$ | " | " | " | " | " | " | " |
| | | 153 | " | | | | | 4.5V | | | | " | | | | OUT | | | | | " | " | $\overline{1G}$ to $\overline{5Y}$ | " | " | " | " | " | " | " |
| | | 154 | " | | | | | | 4.5V | | | " | | | OUT | | | | | | " | " | $\overline{1G}$ to $\overline{6Y}$ | " | " | " | " | " | " | " |
| | | 155 | " | | | | | | | 4.5V | | " | | OUT | | | | | | | " | " | $\overline{1G}$ to $\overline{7Y}$ | " | " | " | " | " | " | " |
| | | 156 | " | | | | | | | | 4.5V | " | OUT | | | | | | | | " | " | $\overline{1G}$ to $\overline{8Y}$ | " | " | " | " | " | " | " |

See footnotes at end of table.

TABLE III. Group A inspection for device type 60 – Continued.

| Symbol | MIL-STD-883 method | Cases R, S, and 2 | Terminal conditions 1/ | | | | | | | | | | | | | | | | | | | | Measured terminal | Test limits | | | | | | Unit |
|---|---|---|---|---|---|---|---|---|---|---|---|---|---|---|---|---|---|---|---|---|---|---|---|---|---|---|---|---|---|---|
| | | | 1 | 2 | 3 | 4 | 5 | 6 | 7 | 8 | 9 | 10 | 11 | 12 | 13 | 14 | 15 | 16 | 17 | 18 | 19 | 20 | | Subgroup 9 $T_C$ = +25°C | | Subgroup 10 $T_C$ = +125°C | | Subgroup 11 $T_C$ = -55°C | | |
| | | Test no. | $\overline{1G}$ | 1A | 2A | 3A | 4A | 5A | 6A | 7A | 8A | GND | $\overline{8Y}$ | $\overline{7Y}$ | $\overline{6Y}$ | $\overline{5Y}$ | $\overline{4Y}$ | $\overline{3Y}$ | $\overline{2Y}$ | $\overline{1Y}$ | $\overline{2G}$ | $V_{CC}$ | | Min | Max | Min | Max | Min | Max | |
| $t_{PZL}$ | 3003 (Fig. 3) | 157 | GND | 4.5V | 4.5V | 4.5V | 4.5V | 4.5V | 4.5V | 4.5V | 4.5V | GND | OUT | OUT | OUT | OUT | OUT | OUT | OUT | OUT | IN | 4.5V | $\overline{2G}$ to $\overline{1Y}$ | 10 | 40 | 10 | 53 | 7 | 40 | ns |
| | | 158 | " | | | | | | | | | " | | | | | | | | | " | " | $\overline{2G}$ to $\overline{2Y}$ | " | " | " | " | " | " | " |
| | | 159 | " | | | | | | | | | " | | | | | | | | | " | " | $\overline{2G}$ to $\overline{3Y}$ | " | " | " | " | " | " | " |
| | | 160 | " | | | | | | | | | " | | | | | | | | | " | " | $\overline{2G}$ to $\overline{4Y}$ | " | " | " | " | " | " | " |
| | | 161 | " | | | | | | | | | " | | | | | | | | | " | " | $\overline{2G}$ to $\overline{5Y}$ | " | " | " | " | " | " | " |
| | | 162 | " | | | | | | | | | " | | | | | | | | | " | " | $\overline{2G}$ to $\overline{6Y}$ | " | " | " | " | " | " | " |
| | | 163 | " | | | | | | | | | " | | | | | | | | | " | " | $\overline{2G}$ to $\overline{7Y}$ | " | " | " | " | " | " | " |
| | | 164 | " | | | | | | | | | " | | | | | | | | | " | " | $\overline{2G}$ to $\overline{8Y}$ | " | " | " | " | " | " | " |
| $t_{PLZ}$ | 3003 (Fig. 3) | 165 | IN | 4.5V | 4.5V | 4.5V | 4.5V | 4.5V | 4.5V | 4.5V | 4.5V | GND | OUT | OUT | OUT | OUT | OUT | OUT | OUT | OUT | GND | 4.5V | $\overline{1G}$ to $\overline{1Y}$ | 10 | 31 | 10 | 41 | 10 | 31 | ns |
| | | 166 | " | | | | | | | | | " | | | | | | | | | " | " | $\overline{1G}$ to $\overline{2Y}$ | " | " | " | " | " | " | " |
| | | 167 | " | | | | | | | | | " | | | | | | | | | " | " | $\overline{1G}$ to $\overline{3Y}$ | " | " | " | " | " | " | " |
| | | 168 | " | | | | | | | | | " | | | | | | | | | " | " | $\overline{1G}$ to $\overline{4Y}$ | " | " | " | " | " | " | " |
| | | 169 | " | | | | | | | | | " | | | | | | | | | " | " | $\overline{1G}$ to $\overline{5Y}$ | " | " | " | " | " | " | " |
| | | 170 | " | | | | | | | | | " | | | | | | | | | " | " | $\overline{1G}$ to $\overline{6Y}$ | " | " | " | " | " | " | " |
| | | 171 | " | | | | | | | | | " | | | | | | | | | " | " | $\overline{1G}$ to $\overline{7Y}$ | " | " | " | " | " | " | " |
| | | 172 | " | | | | | | | | | " | | | | | | | | | " | " | $\overline{1G}$ to $\overline{8Y}$ | " | " | " | " | " | " | " |
| | | 173 | GND | 4.5V | 4.5V | 4.5V | 4.5V | 4.5V | 4.5V | 4.5V | 4.5V | " | OUT | OUT | OUT | OUT | OUT | OUT | OUT | OUT | IN | " | $\overline{2G}$ to $\overline{1Y}$ | " | " | " | " | " | " | " |
| | | 174 | " | | | | | | | | | " | | | | | | | | | " | " | $\overline{2G}$ to $\overline{2Y}$ | " | " | " | " | " | " | " |
| | | 175 | " | | | | | | | | | " | | | | | | | | | " | " | $\overline{2G}$ to $\overline{3Y}$ | " | " | " | " | " | " | " |
| | | 176 | " | | | | | | | | | " | | | | | | | | | " | " | $\overline{2G}$ to $\overline{4Y}$ | " | " | " | " | " | " | " |
| | | 177 | " | | | | | | | | | " | | | | | | | | | " | " | $\overline{2G}$ to $\overline{5Y}$ | " | " | " | " | " | " | " |
| | | 178 | " | | | | | | | | | " | | | | | | | | | " | " | $\overline{2G}$ to $\overline{6Y}$ | " | " | " | " | " | " | " |
| | | 179 | " | | | | | | | | | " | | | | | | | | | " | " | $\overline{2G}$ to $\overline{7Y}$ | " | " | " | " | " | " | " |
| | | 180 | " | | | | | | | | | " | | | | | | | | | " | " | $\overline{2G}$ to $\overline{8Y}$ | " | " | " | " | " | " | " |
| $t_{PHZ}$ | 3003 (Fig. 3) | 181 | IN | GND | GND | GND | GND | GND | GND | GND | GND | " | OUT | OUT | OUT | OUT | OUT | OUT | OUT | OUT | GND | " | $\overline{1G}$ to $\overline{1Y}$ | " | " | " | " | " | " | " |
| | | 182 | " | | | | | | | | | " | | | | | | | | | " | " | $\overline{1G}$ to $\overline{2Y}$ | " | " | " | " | " | " | " |
| | | 183 | " | | | | | | | | | " | | | | | | | | | " | " | $\overline{1G}$ to $\overline{3Y}$ | " | " | " | " | " | " | " |
| | | 184 | " | | | | | | | | | " | | | | | | | | | " | " | $\overline{1G}$ to $\overline{4Y}$ | " | " | " | " | " | " | " |
| | | 185 | " | | | | | | | | | " | | | | | | | | | " | " | $\overline{1G}$ to $\overline{5Y}$ | " | " | " | " | " | " | " |
| | | 186 | " | | | | | | | | | " | | | | | | | | | " | " | $\overline{1G}$ to $\overline{6Y}$ | " | " | " | " | " | " | " |
| | | 187 | " | | | | | | | | | " | | | | | | | | | " | " | $\overline{1G}$ to $\overline{7Y}$ | " | " | " | " | " | " | " |
| | | 188 | " | | | | | | | | | " | | | | | | | | | " | " | $\overline{1G}$ to $\overline{8Y}$ | " | " | " | " | " | " | " |
| | 3003 (Fig. 3) | 189 | GND | GND | GND | GND | GND | GND | GND | GND | GND | " | OUT | OUT | OUT | OUT | OUT | OUT | OUT | OUT | IN | " | $\overline{2G}$ to $\overline{1Y}$ | " | " | " | " | " | " | " |
| | | 190 | " | | | | | | | | | " | | | | | | | | | " | " | $\overline{2G}$ to $\overline{2Y}$ | " | " | " | " | " | " | " |
| | | 191 | " | | | | | | | | | " | | | | | | | | | " | " | $\overline{2G}$ to $\overline{3Y}$ | " | " | " | " | " | " | " |
| | | 192 | " | | | | | | | | | " | | | | | | | | | " | " | $\overline{2G}$ to $\overline{4Y}$ | " | " | " | " | " | " | " |
| | | 193 | " | | | | | | | | | " | | | | | | | | | " | " | $\overline{2G}$ to $\overline{5Y}$ | " | " | " | " | " | " | " |
| | | 194 | " | | | | | | | | | " | | | | | | | | | " | " | $\overline{2G}$ to $\overline{6Y}$ | " | " | " | " | " | " | " |
| | | 195 | " | | | | | | | | | " | | | | | | | | | " | " | $\overline{2G}$ to $\overline{7Y}$ | " | " | " | " | " | " | " |
| | | 196 | " | | | | | | | | | " | | | | | | | | | " | " | $\overline{2G}$ to $\overline{8Y}$ | " | " | " | " | " | " | " |
| $t_{TLH}$ | 3004 (Fig. 3) | 197 | GND | IN | IN | IN | IN | IN | IN | IN | IN | " | OUT | OUT | OUT | OUT | OUT | OUT | OUT | OUT | GND | " | $\overline{1Y}$ | 2 | 12 | 2 | 16 | 2 | 12 | " |
| | | 198 | " | | | | | | | | | " | | | | | | | | | " | " | $\overline{2Y}$ | " | " | " | " | " | " | " |
| | | 199 | " | | | | | | | | | " | | | | | | | | | " | " | $\overline{3Y}$ | " | " | " | " | " | " | " |
| | | 200 | " | | | | | | | | | " | | | | | | | | | " | " | $\overline{4Y}$ | " | " | " | " | " | " | " |
| | | 201 | " | | | | | | | | | " | | | | | | | | | " | " | $\overline{5Y}$ | " | " | " | " | " | " | " |
| | | 202 | " | | | | | | | | | " | | | | | | | | | " | " | $\overline{6Y}$ | " | " | " | " | " | " | " |
| | | 203 | " | | | | | | | | | " | | | | | | | | | " | " | $\overline{7Y}$ | " | " | " | " | " | " | " |
| | | 204 | " | | | | | | | | | " | | | | | | | | | " | " | $\overline{8Y}$ | " | " | " | " | " | " | " |
| $t_{THL}$ | 3004 (Fig. 3) | 205 | GND | IN | IN | IN | IN | IN | IN | IN | IN | " | OUT | OUT | OUT | OUT | OUT | OUT | OUT | OUT | " | " | $\overline{1Y}$ | " | " | " | " | " | " | " |
| | | 206 | " | | | | | | | | | " | | | | | | | | | " | " | $\overline{2Y}$ | " | " | " | " | " | " | " |
| | | 207 | " | | | | | | | | | " | | | | | | | | | " | " | $\overline{3Y}$ | " | " | " | " | " | " | " |
| | | 208 | " | | | | | | | | | " | | | | | | | | | " | " | $\overline{4Y}$ | " | " | " | " | " | " | " |
| | | 209 | " | | | | | | | | | " | | | | | | | | | " | " | $\overline{5Y}$ | " | " | " | " | " | " | " |
| | | 210 | " | | | | | | | | | " | | | | | | | | | " | " | $\overline{6Y}$ | " | " | " | " | " | " | " |
| | | 211 | " | | | | | | | | | " | | | | | | | | | " | " | $\overline{7Y}$ | " | " | " | " | " | " | " |
| | | 212 | " | | | | | | | | | " | | | | | | | | | " | " | $\overline{8Y}$ | " | " | " | " | " | " | " |

See footnotes at end of table.

TABLE III. Group A inspection for device type 61.

| Symbol | MIL-STD-883 method | Cases R, S, and 2 | Terminal conditions 1/ | | | | | | | | | | | | | | | | | | | | Measured terminal | Test limits | | | | | | Unit |
|---|---|---|---|---|---|---|---|---|---|---|---|---|---|---|---|---|---|---|---|---|---|---|---|---|---|---|---|---|---|---|
| | | | 1 | 2 | 3 | 4 | 5 | 6 | 7 | 8 | 9 | 10 | 11 | 12 | 13 | 14 | 15 | 16 | 17 | 18 | 19 | 20 | | Subgroup 1 $T_C$ = +25°C | | Subgroup 2 $T_C$ = +125°C | | Subgroup 3 $T_C$ = -55°C | | |
| | | Test no. | $\overline{1G}$ | 1A | 2A | 3A | 4A | 5A | 6A | 7A | 8A | GND | 8Y | 7Y | 6Y | 5Y | 4Y | 3Y | 2Y | 1Y | $\overline{2G}$ | $V_{CC}$ | | Min | Max | Min | Max | Min | Max | |
| $V_{IC}$ (pos) | | 1 | 1mA | | | | | | | | | OPEN | | | | | | | | | | GND | $\overline{1G}$ | 1/ | 1.5 | | | | | V |
| | | 2 | | 1mA | | | | | | | | " | | | | | | | | | | " | 1A | " | " | | | | | " |
| | | 3 | | | 1mA | | | | | | | " | | | | | | | | | | " | 2A | " | " | | | | | " |
| | | 4 | | | | 1mA | | | | | | " | | | | | | | | | | " | 3A | " | " | | | | | " |
| | | 5 | | | | | 1mA | | | | | " | | | | | | | | | | " | 4A | " | " | | | | | " |
| | | 6 | | | | | | 1mA | | | | " | | | | | | | | | | " | 5A | " | " | | | | | " |
| | | 7 | | | | | | | 1mA | | | " | | | | | | | | | | " | 6A | " | " | | | | | " |
| | | 8 | | | | | | | | 1mA | | " | | | | | | | | | | " | 7A | " | " | | | | | " |
| | | 9 | | | | | | | | | 1mA | " | | | | | | | | | | " | 8A | " | " | | | | | " |
| | | 10 | | | | | | | | | | " | | | | | | | | | 1mA | " | $\overline{2G}$ | " | " | | | | | " |
| $V_{IC}$ (neg) | | 11 | -1mA | | | | | | | | | GND | | | | | | | | | | OPEN | $\overline{1G}$ | | -1.5 | | | | | " |
| | | 12 | | -1mA | | | | | | | | " | | | | | | | | | | " | 1A | | " | | | | | " |
| | | 13 | | | -1mA | | | | | | | " | | | | | | | | | | " | 2A | | " | | | | | " |
| | | 14 | | | | -1mA | | | | | | " | | | | | | | | | | " | 3A | | " | | | | | " |
| | | 15 | | | | | -1mA | | | | | " | | | | | | | | | | " | 4A | | " | | | | | " |
| | | 16 | | | | | | -1mA | | | | " | | | | | | | | | | " | 5A | | " | | | | | " |
| | | 17 | | | | | | | -1mA | | | " | | | | | | | | | | " | 6A | | " | | | | | " |
| | | 18 | | | | | | | | -1mA | | " | | | | | | | | | | " | 7A | | " | | | | | " |
| | | 19 | | | | | | | | | -1mA | " | | | | | | | | | | " | 8A | | " | | | | | " |
| | | 20 | | | | | | | | | | " | | | | | | | | | -1mA | " | $\overline{2G}$ | | " | | | | | " |
| $I_{CCH}$ | 3005 | 21 | GND | 5.5V | 5.5V | 5.5V | 5.5V | 5.5V | 5.5V | 5.5V | 5.5V | " | | | | | | | | | GND | 5.5V | $V_{CC}$ | | 0.2 | | 20 | | | μA |
| $I_{CCL}$ | 3005 | 22 | GND | GND | GND | GND | GND | GND | GND | GND | GND | " | | | | | | | | | " | " | " | | 0.2 | | 20 | | | μA |
| $I_{CC}\Delta$ | | 223 | 2.4V | 0.4V | 0.4V | 0.4V | 0.4V | 0.4V | 0.4V | 0.4V | 0.4V | " | | | | | | | | | " | " | " | | 3.0 | | 3.0 | | 3.0 | mA |
| | | 224 | GND | 2.4V | " | " | " | " | " | " | " | " | | | | | | | | | " | " | " | | " | | " | | " | " |
| | | 225 | " | 0.4V | 2.4V | " | " | " | " | " | " | " | | | | | | | | | " | " | " | | " | | " | | " | " |
| | | 226 | " | " | 0.4V | 2.4V | " | " | " | " | " | " | | | | | | | | | " | " | " | | " | | " | | " | " |
| | | 227 | " | " | " | 0.4V | 2.4V | " | " | " | " | " | | | | | | | | | " | " | " | | " | | " | | " | " |
| | | 228 | " | " | " | " | 0.4V | 2.4V | " | " | " | " | | | | | | | | | " | " | " | | " | | " | | " | " |
| | | 229 | " | " | " | " | " | 0.4V | 2.4V | " | " | " | | | | | | | | | " | " | " | | " | | " | | " | " |
| | | 230 | " | " | " | " | " | " | 0.4V | 2.4V | " | " | | | | | | | | | " | " | " | | " | | " | | " | " |
| | | 231 | " | " | " | " | " | " | " | 0.4V | 2.4V | " | | | | | | | | | " | " | " | | " | | " | | " | " |
| | | 232 | " | " | " | " | " | " | " | " | 0.4V | " | | | | | | | | | 2.4V | " | " | | " | | " | | " | " |
| $I_{CCZ}$ | | 25 | 5.5V | GND | GND | GND | GND | 5.5V | 5.5V | 5.5V | 5.5V | " | | | | | | | | | GND | " | " | | 0.1 | | 10 | | | μA |
| | | 26 | GND | 5.5V | 5.5V | 5.5V | 5.5V | GND | GND | GND | GND | " | | | | | | | | | 5.5V | " | " | | 0.1 | | 10 | | | μA |
| $V_{OH6}$ | 3006 | 27 | 0.8V | 2.0V | | | | | | | | " | | | | | | | | -20μA | 0.8V | 4.5V | 1Y | 4.4 | | 4.4 | | 4.4 | | V |
| | | 28 | " | | 2.0V | | | | | | | " | | | | | | | -20μA | | " | " | 2Y | " | | " | | " | | " |
| | | 29 | " | | | 2.0V | | | | | | " | | | | | | -20μA | | | " | " | 3Y | " | | " | | " | | " |
| | | 30 | " | | | | 2.0V | | | | | " | | | | | -20μA | | | | " | " | 4Y | " | | " | | " | | " |
| | | 31 | " | | | | | 2.0V | | | | " | | | | -20μA | | | | | " | " | 5Y | " | | " | | " | | " |
| | | 32 | " | | | | | | 2.0V | | | " | | | -20μA | | | | | | " | " | 6Y | " | | " | | " | | " |
| | | 33 | " | | | | | | | 2.0V | | " | | -20μA | | | | | | | " | " | 7Y | " | | " | | " | | " |
| | | 34 | " | | | | | | | | 2.0V | " | -20μA | | | | | | | | " | " | 8Y | " | | " | | " | | " |
| $V_{OH7}$ | 3006 | 35 | 0.8V | 2.0V | | | | | | | | " | | | | | | | | -6.0mA | " | 5.5V | 1Y | 3.98 | | 3.7 | | 3.98 | | " |
| | | 36 | " | | 2.0V | | | | | | | " | | | | | | | -6.0mA | | " | " | 2Y | " | | " | | " | | " |
| | | 37 | " | | | 2.0V | | | | | | " | | | | | | -6.0mA | | | " | " | 3Y | " | | " | | " | | " |
| | | 38 | " | | | | 2.0V | | | | | " | | | | | -6.0mA | | | | " | " | 4Y | " | | " | | " | | " |
| | | 39 | " | | | | | 2.0V | | | | " | | | | -6.0mA | | | | | " | " | 5Y | " | | " | | " | | " |
| | | 40 | " | | | | | | 2.0V | | | " | | | -6.0mA | | | | | | " | " | 6Y | " | | " | | " | | " |
| | | 41 | " | | | | | | | 2.0V | | " | | -6.0mA | | | | | | | " | " | 7Y | " | | " | | " | | " |
| | | 42 | " | | | | | | | | 2.0V | " | -6.0mA | | | | | | | | " | " | 8Y | " | | " | | " | | " |
| $V_{OL6}$ | 3007 | 43 | " | 0.8V | | | | | | | | " | | | | | | | | 20μA | " | 4.5V | 1Y | | 0.1 | | 0.1 | | 0.1 | " |
| | | 44 | " | | 0.8V | | | | | | | " | | | | | | | 20μA | | " | " | 2Y | | " | | " | | " | " |
| | | 45 | " | | | 0.8V | | | | | | " | | | | | | 20μA | | | " | " | 3Y | | " | | " | | " | " |
| | | 46 | " | | | | 0.8V | | | | | " | | | | | 20μA | | | | " | " | 4Y | | " | | " | | " | " |
| | | 47 | " | | | | | 0.8V | | | | " | | | | 20μA | | | | | " | " | 5Y | | " | | " | | " | " |
| | | 48 | " | | | | | | 0.8V | | | " | | | 20μA | | | | | | " | " | 6Y | | " | | " | | " | " |
| | | 49 | " | | | | | | | 0.8V | | " | | 20μA | | | | | | | " | " | 7Y | | " | | " | | " | " |
| | | 50 | " | | | | | | | | 0.8V | " | 20μA | | | | | | | | " | " | 8Y | | " | | " | | " | " |
| $V_{OL7}$ | 3007 | 51 | " | 0.8V | | | | | | | | " | | | | | | | | 6.0mA | " | 5.5V | 1Y | | 0.26 | | 0.4 | | 0.26 | " |
| | | 52 | " | | 0.8V | | | | | | | " | | | | | | | 6.0mA | | " | " | 2Y | | " | | " | | " | " |
| | | 53 | " | | | 0.8V | | | | | | " | | | | | | 6.0mA | | | " | " | 3Y | | " | | " | | " | " |
| | | 54 | " | | | | 0.8V | | | | | " | | | | | 6.0mA | | | | " | " | 4Y | | " | | " | | " | " |
| | | 55 | " | | | | | 0.8V | | | | " | | | | 6.0mA | | | | | " | " | 5Y | | " | | " | | " | " |
| | | 56 | " | | | | | | 0.8V | | | " | | | 6.0mA | | | | | | " | " | 6Y | | " | | " | | " | " |
| | | 57 | " | | | | | | | 0.8V | | " | | 6.0mA | | | | | | | " | " | 7Y | | " | | " | | " | " |
| | | 58 | " | | | | | | | | 0.8V | " | 6.0mA | | | | | | | | " | " | 8Y | | " | | " | | " | " |

See footnotes at end of table.

TABLE III. Group A inspection for device type 61 – Continued.

| Symbol | MIL-STD-883 method | Cases R, S and 2 | Terminal conditions 1/ | | | | | | | | | | | | | | | | | | | | Measured terminal | Test limits | | | | | | Unit |
|---|---|---|---|---|---|---|---|---|---|---|---|---|---|---|---|---|---|---|---|---|---|---|---|---|---|---|---|---|---|---|
| | | | 1 | 2 | 3 | 4 | 5 | 6 | 7 | 8 | 9 | 10 | 11 | 12 | 13 | 14 | 15 | 16 | 17 | 18 | 19 | 20 | | Subgroup 1 $T_C$ = +25°C | | Subgroup 2 $T_C$ = +125°C | | Subgroup 3 $T_C$ = -55°C | | |
| | | Test no. | $\overline{1G}$ | 1A | 2A | 3A | 4A | 5A | 6A | 7A | 8A | GND | 8Y | 7Y | 6Y | 5Y | 4Y | 3Y | 2Y | 1Y | $\overline{2G}$ | $V_{CC}$ | | Min | Max | Min | Max | Min | Max | |
| $I_{OZH}$ | | 59 | 0.8V | 9/ | | | | | | | | GND | | | | | | | | | 9/ | 5.5V | 1Y | | 0.2 | | 2.0 | | | µA |
| | | 60 | " | | 9/ | | | | | | | " | | | | | | | 5.5V | 5.5V | " | " | 2Y | | " | | " | | | " |
| | | 61 | " | | | 9/ | | | | | | " | | | | | | 5.5V | | | " | " | 3Y | | " | | " | | | " |
| | | 62 | " | | | | 9/ | | | | | " | | | | | 5.5V | | | | " | " | 4Y | | " | | " | | | " |
| | | 63 | " | | | | | 9/ | | | | " | | | | 5.5V | | | | | " | " | 5Y | | " | | " | | | " |
| | | 64 | " | | | | | | 9/ | | | " | | | 5.5V | | | | | | " | " | 6Y | | " | | " | | | " |
| | | 65 | " | | | | | | | 9/ | | " | | 5.5V | | | | | | | " | " | 7Y | | " | | " | | | " |
| | | 66 | " | | | | | | | | 9/ | " | 5.5V | | | | | | | | " | " | 8Y | | " | | " | | | " |
| $I_{OZL}$ | | 67 | 9/ | 9/ | | | | | | | | " | | | | | | | | GND | 0.8V | " | 1Y | | -0.2 | | -2.0 | | | " |
| | | 68 | " | | 9/ | | | | | | | " | | | | | | | GND | | " | " | 2Y | | " | | " | | | " |
| | | 69 | " | | | 9/ | | | | | | " | | | | | | GND | | | " | " | 3Y | | " | | " | | | " |
| | | 70 | " | | | | 9/ | | | | | " | | | | | GND | | | | " | " | 4Y | | " | | " | | | " |
| | | 71 | " | | | | | 9/ | | | | " | | | | GND | | | | | " | " | 5Y | | " | | " | | | " |
| | | 72 | " | | | | | | 9/ | | | " | | | GND | | | | | | " | " | 6Y | | " | | " | | | " |
| | | 73 | " | | | | | | | 9/ | | " | | GND | | | | | | | " | " | 7Y | | " | | " | | | " |
| | | 74 | " | | | | | | | | 9/ | " | GND | | | | | | | | " | " | 8Y | | " | | " | | | " |
| $I_{IH}$ | 3010 | 75 | 5.5V | GND | GND | GND | GND | GND | GND | GND | GND | " | | | | | | | | | GND | " | $\overline{1G}$ | | .05 | | 0.1 | | | " |
| | | 76 | GND | 5.5V | GND | " | " | " | " | " | " | " | | | | | | | | | " | " | 1A | | " | | " | | | " |
| | | 77 | " | GND | 5.5V | " | " | " | " | " | " | " | | | | | | | | | " | " | 2A | | " | | " | | | " |
| | | 78 | " | " | GND | 5.5V | " | " | " | " | " | " | | | | | | | | | " | " | 3A | | " | | " | | | " |
| | | 79 | " | " | " | GND | 5.5V | " | " | " | " | " | | | | | | | | | " | " | 4A | | " | | " | | | " |
| | | 80 | " | " | " | " | GND | 5.5V | " | " | " | " | | | | | | | | | " | " | 5A | | " | | " | | | " |
| | | 81 | " | " | " | " | " | GND | 5.5V | " | " | " | | | | | | | | | " | " | 6A | | " | | " | | | " |
| | | 82 | " | " | " | " | " | " | GND | 5.5V | " | " | | | | | | | | | " | " | 7A | | " | | " | | | " |
| | | 83 | " | " | " | " | " | " | " | GND | 5.5V | " | | | | | | | | | " | " | 8A | | " | | " | | | " |
| | | 84 | " | " | " | " | " | " | " | GND | GND | " | | | | | | | | | 5.5V | " | $\overline{2G}$ | | " | | " | | | " |
| $I_{IL}$ | 3009 | 85 | GND | 5.5V | 5.5V | 5.5V | 5.5V | 5.5V | 5.5V | 5.5V | 5.5V | " | | | | | | | | | " | " | $\overline{1G}$ | | -.05 | | -0.1 | | | " |
| | | 86 | 5.5V | GND | 5.5V | " | " | " | " | " | " | " | | | | | | | | | " | " | 1A | | " | | " | | | " |
| | | 87 | " | 5.5V | GND | " | " | " | " | " | " | " | | | | | | | | | " | " | 2A | | " | | " | | | " |
| | | 88 | " | " | 5.5V | GND | " | " | " | " | " | " | | | | | | | | | " | " | 3A | | " | | " | | | " |
| | | 89 | " | " | " | 5.5V | GND | " | " | " | " | " | | | | | | | | | " | " | 4A | | " | | " | | | " |
| | | 90 | " | " | " | " | 5.5V | GND | " | " | " | " | | | | | | | | | " | " | 5A | | " | | " | | | " |
| | | 91 | " | " | " | " | " | 5.5V | GND | " | " | " | | | | | | | | | " | " | 6A | | " | | " | | | " |
| | | 92 | " | " | " | " | " | " | 5.5V | GND | " | " | | | | | | | | | " | " | 7A | | " | | " | | | " |
| | | 93 | " | " | " | " | " | " | " | 5.5V | GND | " | | | | | | | | | " | " | 8A | | " | | " | | | " |
| | | 94 | " | " | " | " | " | " | " | 5.5V | 5.5V | " | | | | | | | | | GND | " | $\overline{2G}$ | | " | | " | | | " |
| $I_{OS4}$ | 3011 | 95 | GND | 4V | | | | | | | | GND | | | | | | | | GND | GND | 4V | 1Y | -10 | -135 | -10 | -135 | -10 | -135 | mA |
| | | 96 | " | | 4V | | | | | | | " | | | | | | | GND | | " | " | 2Y | " | " | " | " | " | " | " |
| | | 97 | " | | | 4V | | | | | | " | | | | | | GND | | | " | " | 3Y | " | " | " | " | " | " | " |
| | | 98 | " | | | | 4V | | | | | " | | | | | GND | | | | " | " | 4Y | " | " | " | " | " | " | " |
| | | 99 | " | | | | | 4V | | | | " | | | | GND | | | | | " | " | 5Y | " | " | " | " | " | " | " |
| | | 100 | " | | | | | | 4V | | | " | | | GND | | | | | | " | " | 6Y | " | " | " | " | " | " | " |
| | | 101 | " | | | | | | | 4V | | " | | GND | | | | | | | " | " | 7Y | " | " | " | " | " | " | " |
| | | 102 | " | | | | | | | | 4V | " | GND | | | | | | | | " | " | 8Y | " | " | " | " | " | " | " |
| | | | | | | | | | | | | | | | | | | | | | | | | Subgroup 4 $T_C$ = +25°C | | | | | | |
| | | | | | | | | | | | | | | | | | | | | | | | | Min | Max | | | | | |
| $C_i$ | 3012 | 103 | 2/ | | | | | | | | | GND | | | | | | | | | | GND | $\overline{1G}$ | | 10 | | | | | pF |
| | | 104 | | 2/ | | | | | | | | " | | | | | | | | | | " | 1A | | " | | | | | " |
| | | 105 | | | 2/ | | | | | | | " | | | | | | | | | | " | 2A | | " | | | | | " |
| | | 106 | | | | 2/ | | | | | | " | | | | | | | | | | " | 3A | | " | | | | | " |
| | | 107 | | | | | 2/ | | | | | " | | | | | | | | | | " | 4A | | " | | | | | " |
| | | 108 | | | | | | 2/ | | | | " | | | | | | | | | | " | 5A | | " | | | | | " |
| | | 109 | | | | | | | 2/ | | | " | | | | | | | | | | " | 6A | | " | | | | | " |
| | | 110 | | | | | | | | 2/ | | " | | | | | | | | | | " | 7A | | " | | | | | " |
| | | 111 | | | | | | | | | 2/ | " | | | | | | | | | | " | 8A | | " | | | | | " |
| | | 112 | | | | | | | | | | " | | | | | | | | | 2/ | " | $\overline{2G}$ | | " | | | | | " |
| $C_o$ | 3012 | 113 | GND | | | | | | | | | " | | | | | 2/ | 2/ | 2/ | 2/ | 5.5V | 5.5V | Y's | | 20 | | | | | " |
| | | 114 | 5.5V | | | | | | | | | " | 2/ | 2/ | 2/ | 2/ | | | | | GND | 5.5V | Y's | | 20 | | | | | " |

See footnotes at end of table.

TABLE III. Group A inspection for device type 61 – Continued.

| Symbol | MIL-STD-883 method | Cases R, S, and 2 | Terminal conditions 1/ | | | | | | | | | | | | | | | | | | | | Measured terminal | Test limits | | | | | | Unit |
|---|---|---|---|---|---|---|---|---|---|---|---|---|---|---|---|---|---|---|---|---|---|---|---|---|---|---|---|---|---|---|
| | | | 1 | 2 | 3 | 4 | 5 | 6 | 7 | 8 | 9 | 10 | 11 | 12 | 13 | 14 | 15 | 16 | 17 | 18 | 19 | 20 | | Subgroup 7 $T_C$ = +25°C | | Subgroup 8 $T_C$ = +125°C | | Subgroup 8 $T_C$ = -55°C | | |
| | | Test no. | $\overline{1G}$ | 1A | 2A | 3A | 4A | 5A | 6A | 7A | 8A | GND | 8Y | 7Y | 6Y | 5Y | 4Y | 3Y | 2Y | 1Y | $\overline{2G}$ | $V_{CC}$ | | Min | Max | Min | Max | Min | Max | |
| Truth table | 8/ | 115 | B | A | A | A | A | A | A | A | A | GND | H | H | H | H | H | H | H | H | B | 4.5V | 7/ | | | | | | | |
| | | 116 | B | B | B | B | B | B | B | B | B | GND | L | L | L | L | L | L | L | L | B | 4.5V | 7/ | | | | | | | |
| | | | | | | | | | | | | | | | | | | | | | | | | Subgroup 9 $T_C$ = +25°C | | Subgroup 10 $T_C$ = +125°C | | Subgroup 11 $T_C$ = -55°C | | |
| | | | | | | | | | | | | | | | | | | | | | | | | Min | Max | Min | Max | Min | Max | |
| $t_{PHL}$ | 3003 (Fig. 3) | 117 | GND | IN | | | | | | | | GND | | | | | | | | OUT | GND | 4.5V | 1A to 1Y | 10 | 26 | 10 | 35 | 10 | 26 | ns |
| | | 118 | " | | IN | | | | | | | " | | | | | | | OUT | | " | " | 2A to 2Y | " | " | " | " | " | " | " |
| | | 119 | " | | | IN | | | | | | " | | | | | | OUT | | | " | " | 3A to 3Y | " | " | " | " | " | " | " |
| | | 120 | " | | | | IN | | | | | " | | | | | OUT | | | | " | " | 4A to 4Y | " | " | " | " | " | " | " |
| | | 121 | " | | | | | IN | | | | " | | | | OUT | | | | | " | " | 5A to 5Y | " | " | " | " | " | " | " |
| | | 122 | " | | | | | | IN | | | " | | | OUT | | | | | | " | " | 6A to 6Y | " | " | " | " | " | " | " |
| | | 123 | " | | | | | | | IN | | " | | OUT | | | | | | | " | " | 7A to 7Y | " | " | " | " | " | " | " |
| | | 124 | " | | | | | | | | IN | " | OUT | | | | | | | | " | " | 8A to 8Y | " | " | " | " | " | " | " |
| $t_{PLH}$ | 3003 (Fig. 3) | 125 | " | IN | | | | | | | | " | | | | | | | | OUT | " | " | 1A to 1Y | " | " | " | " | " | " | " |
| | | 126 | " | | IN | | | | | | | " | | | | | | | OUT | | " | " | 2A to 2Y | " | " | " | " | " | " | " |
| | | 127 | " | | | IN | | | | | | " | | | | | | OUT | | | " | " | 3A to 3Y | " | " | " | " | " | " | " |
| | | 128 | " | | | | IN | | | | | " | | | | | OUT | | | | " | " | 4A to 4Y | " | " | " | " | " | " | " |
| | | 129 | " | | | | | IN | | | | " | | | | OUT | | | | | " | " | 5A to 5Y | " | " | " | " | " | " | " |
| | | 130 | " | | | | | | IN | | | " | | | OUT | | | | | | " | " | 6A to 6Y | " | " | " | " | " | " | " |
| | | 131 | " | | | | | | | IN | | " | | OUT | | | | | | | " | " | 7A to 7Y | " | " | " | " | " | " | " |
| | | 132 | " | | | | | | | | IN | " | OUT | | | | | | | | " | " | 8A to 8Y | " | " | " | " | " | " | " |
| $t_{PZH}$ | 3003 (Fig. 3) | 133 | IN | 4.5V | | | | | | | | " | | | | | | | | OUT | " | " | $\overline{1G}$ to 1Y | " | 40 | " | 53 | 7 | 40 | " |
| | | 134 | " | | 4.5V | | | | | | | " | | | | | | | OUT | | " | " | $\overline{1G}$ to 2Y | " | " | " | " | " | " | " |
| | | 135 | " | | | 4.5V | | | | | | " | | | | | | OUT | | | " | " | $\overline{1G}$ to 3Y | " | " | " | " | " | " | " |
| | | 136 | " | | | | 4.5V | | | | | " | | | | | OUT | | | | " | " | $\overline{1G}$ to 4Y | " | " | " | " | " | " | " |
| | | 137 | " | | | | | 4.5V | | | | " | | | | OUT | | | | | " | " | $\overline{1G}$ to 5Y | " | " | " | " | " | " | " |
| | | 138 | " | | | | | | 4.5V | | | " | | | OUT | | | | | | " | " | $\overline{1G}$ to 6Y | " | " | " | " | " | " | " |
| | | 139 | " | | | | | | | 4.5V | | " | | OUT | | | | | | | " | " | 1G to 7Y | " | " | " | " | " | " | " |
| | | 140 | " | | | | | | | | 4.5V | " | OUT | | | | | | | | " | " | $\overline{1G}$ to 8Y | " | " | " | " | " | " | " |
| | 3003 (Fig. 3) | 141 | GND | 4.5V | | | | | | | | GND | | | | | | | | OUT | IN | " | $\overline{2G}$ to 1Y | " | " | " | 53 | " | " | " |
| | | 142 | " | | 4.5V | | | | | | | " | | | | | | | OUT | | " | " | $\overline{2G}$ to 2Y | " | " | " | " | " | " | " |
| | | 143 | " | | | 4.5V | | | | | | " | | | | | | OUT | | | " | " | $\overline{2G}$ to 3Y | " | " | " | " | " | " | " |
| | | 144 | " | | | | 4.5V | | | | | " | | | | | OUT | | | | " | " | $\overline{2G}$ to 4Y | " | " | " | " | " | " | " |
| | | 145 | " | | | | | 4.5V | | | | " | | | | OUT | | | | | " | " | $\overline{2G}$ to 5Y | " | " | " | " | " | " | " |
| | | 146 | " | | | | | | 4.5V | | | " | | | OUT | | | | | | " | " | $\overline{2G}$ to 6Y | " | " | " | " | " | " | " |
| | | 147 | " | | | | | | | 4.5V | | " | | OUT | | | | | | | " | " | $\overline{2G}$ to 7Y | " | " | " | " | " | " | " |
| | | 148 | " | | | | | | | | 4.5V | " | OUT | | | | | | | | " | " | $\overline{2G}$ to 8Y | " | " | " | " | " | " | " |
| $t_{PZL}$ | 3003 (Fig. 3) | 149 | IN | GND | | | | | | | | " | | | | | | | | OUT | GND | " | $\overline{1G}$ to 1Y | " | " | " | " | " | " | " |
| | | 150 | " | | GND | | | | | | | " | | | | | | | OUT | | " | " | $\overline{1G}$ to 2Y | " | " | " | " | " | " | " |
| | | 151 | " | | | GND | | | | | | " | | | | | | OUT | | | " | " | $\overline{1G}$ to 3Y | " | " | " | " | " | " | " |
| | | 152 | " | | | | GND | | | | | " | | | | | OUT | | | | " | " | $\overline{1G}$ to 4Y | " | " | " | " | " | " | " |
| | | 153 | " | | | | | GND | | | | " | | | | OUT | | | | | " | " | $\overline{1G}$ to 5Y | " | " | " | " | " | " | " |
| | | 154 | " | | | | | | GND | | | " | | | OUT | | | | | | " | " | $\overline{1G}$ to 6Y | " | " | " | " | " | " | " |
| | | 155 | " | | | | | | | GND | | " | | OUT | | | | | | | " | " | $\overline{1G}$ to 7Y | " | " | " | " | " | " | " |
| | | 156 | " | | | | | | | | GND | " | OUT | | | | | | | | " | " | $\overline{1G}$ to 8Y | " | " | " | " | " | " | " |
| | | 157 | GND | GND | | | | | | | | " | | | | | | | | OUT | IN | " | $\overline{2G}$ to 1Y | " | " | " | " | " | " | " |
| | | 158 | " | | GND | | | | | | | " | | | | | | | OUT | | " | " | $\overline{2G}$ to 2Y | " | " | " | " | " | " | " |
| | | 159 | " | | | GND | | | | | | " | | | | | | OUT | | | " | " | $\overline{2G}$ to 3Y | " | " | " | " | " | " | " |
| | | 160 | " | | | | GND | | | | | " | | | | | OUT | | | | " | " | $\overline{2G}$ to 4Y | " | " | " | " | " | " | " |
| | | 161 | " | | | | | GND | | | | " | | | | OUT | | | | | " | " | $\overline{2G}$ to 5Y | " | " | " | " | " | " | " |
| | | 162 | " | | | | | | GND | | | " | | | OUT | | | | | | " | " | $\overline{2G}$ to 6Y | " | " | " | " | " | " | " |
| | | 163 | " | | | | | | | GND | | " | | OUT | | | | | | | " | " | $\overline{2G}$ to 7Y | " | " | " | " | " | " | " |
| | | 164 | " | | | | | | | | GND | " | OUT | | | | | | | | " | " | $\overline{2G}$ to 8Y | " | " | " | " | " | " | " |

See footnotes at end of table.

TABLE III. Group A inspection for device type 61 – Continued.

| Symbol | MIL-STD-883 method | Cases R, S, and 2 | Terminal conditions 1/ | | | | | | | | | | | | | | | | | | | | Measured terminal | Test limits | | | | | | Unit |
|---|---|---|---|---|---|---|---|---|---|---|---|---|---|---|---|---|---|---|---|---|---|---|---|---|---|---|---|---|---|---|
| | | | 1 | 2 | 3 | 4 | 5 | 6 | 7 | 8 | 9 | 10 | 11 | 12 | 13 | 14 | 15 | 16 | 17 | 18 | 19 | 20 | | Subgroup 9 $T_C$ = +25°C | | Subgroup 10 $T_C$ = +125°C | | Subgroup 11 $T_C$ = -55°C | | |
| | | Test no. | $\overline{1G}$ | 1A | 2A | 3A | 4A | 5A | 6A | 7A | 8A | GND | 8Y | 7Y | 6Y | 5Y | 4Y | 3Y | 2Y | 1Y | $\overline{2G}$ | $V_{CC}$ | | Min | Max | Min | Max | Min | Max | |
| $t_{PLZ}$ | 3003 (Fig. 3) | 165 | IN | GND | | | | | | | | GND | | | | | | | | OUT | GND | 4.5V | $\overline{1G}$ to 1Y | 10 | 31 | 10 | 41 | 10 | 31 | ns |
| | | 166 | " | | GND | | | | | | | " | | | | | | | OUT | | " | " | $\overline{1G}$ to 2Y | " | " | " | " | " | " | " |
| | | 167 | " | | | GND | | | | | | " | | | | | | OUT | | | " | " | $\overline{1G}$ to 3Y | " | " | " | " | " | " | " |
| | | 168 | " | | | | GND | | | | | " | | | | | OUT | | | | " | " | $\overline{1G}$ to 4Y | " | " | " | " | " | " | " |
| | | 169 | " | | | | | GND | | | | " | | | | OUT | | | | | " | " | $\overline{1G}$ to 5Y | " | " | " | " | " | " | " |
| | | 170 | " | | | | | | GND | | | " | | | OUT | | | | | | " | " | $\overline{1G}$ to 6Y | " | " | " | " | " | " | " |
| | | 171 | " | | | | | | | GND | | " | | OUT | | | | | | | " | " | $\overline{1G}$ to 7Y | " | " | " | " | " | " | " |
| | | 172 | " | | | | | | | | GND | " | OUT | | | | | | | | " | " | $\overline{1G}$ to 8Y | " | " | " | " | " | " | " |
| | | 173 | GND | GND | | | | | | | | " | | | | | | | | OUT | IN | " | $\overline{2G}$ to 1Y | " | " | " | " | " | " | " |
| | | 174 | " | | GND | | | | | | | " | | | | | | | OUT | | " | " | $\overline{2G}$ to 2Y | " | " | " | " | " | " | " |
| | | 175 | " | | | GND | | | | | | " | | | | | | OUT | | | " | " | $\overline{2G}$ to 3Y | " | " | " | " | " | " | " |
| | | 176 | " | | | | GND | | | | | " | | | | | OUT | | | | " | " | $\overline{2G}$ to 4Y | " | " | " | " | " | " | " |
| | | 177 | " | | | | | GND | | | | " | | | | OUT | | | | | " | " | $\overline{2G}$ to 5Y | " | " | " | " | " | " | " |
| | | 178 | " | | | | | | GND | | | " | | | OUT | | | | | | " | " | $\overline{2G}$ to 6Y | " | " | " | " | " | " | " |
| | | 179 | " | | | | | | | GND | | " | | OUT | | | | | | | " | " | $\overline{2G}$ to 7Y | " | " | " | " | " | " | " |
| | | 180 | " | | | | | | | | GND | " | OUT | | | | | | | | " | " | $\overline{2G}$ to 8Y | " | " | " | " | " | " | " |
| $t_{PHZ}$ | 3003 (Fig. 3) | 181 | IN | 4.5V | | | | | | | | " | | | | | | | | OUT | GND | " | $\overline{1G}$ to 1Y | " | " | " | " | " | " | " |
| | | 182 | " | | 4.5V | | | | | | | " | | | | | | | OUT | | " | " | $\overline{1G}$ to 2Y | " | " | " | " | " | " | " |
| | | 183 | " | | | 4.5V | | | | | | " | | | | | | OUT | | | " | " | $\overline{1G}$ to 3Y | " | " | " | " | " | " | " |
| | | 184 | " | | | | 4.5V | | | | | " | | | | | OUT | | | | " | " | $\overline{1G}$ to 4Y | " | " | " | " | " | " | " |
| | | 185 | " | | | | | 4.5V | | | | " | | | | OUT | | | | | " | " | $\overline{1G}$ to 5Y | " | " | " | " | " | " | " |
| | | 186 | " | | | | | | 4.5V | | | " | | | OUT | | | | | | " | " | $\overline{1G}$ to 6Y | " | " | " | " | " | " | " |
| | | 187 | " | | | | | | | 4.5V | | " | | OUT | | | | | | | " | " | $\overline{1G}$ to 7Y | " | " | " | " | " | " | " |
| | | 188 | " | | | | | | | | 4.5V | " | OUT | | | | | | | | " | " | $\overline{1G}$ to 8Y | " | " | " | " | " | " | " |
| | 3003 (Fig. 3) | 189 | GND | 4.5V | | | | | | | | " | | | | | | | | OUT | IN | " | $\overline{2G}$ to 1Y | " | " | " | " | " | " | " |
| | | 190 | " | | 4.5V | | | | | | | " | | | | | | | OUT | | " | " | $\overline{2G}$ to 2Y | " | " | " | " | " | " | " |
| | | 191 | " | | | 4.5V | | | | | | " | | | | | | OUT | | | " | " | $\overline{2G}$ to 3Y | " | " | " | " | " | " | " |
| | | 192 | " | | | | 4.5V | | | | | " | | | | | OUT | | | | " | " | $\overline{2G}$ to 4Y | " | " | " | " | " | " | " |
| | | 193 | " | | | | | 4.5V | | | | " | | | | OUT | | | | | " | " | $\overline{2G}$ to 5Y | " | " | " | " | " | " | " |
| | | 194 | " | | | | | | 4.5V | | | " | | | OUT | | | | | | " | " | $\overline{2G}$ to 6Y | " | " | " | " | " | " | " |
| | | 195 | " | | | | | | | 4.5V | | " | | OUT | | | | | | | " | " | $\overline{2G}$ to 7Y | " | " | " | " | " | " | " |
| | | 196 | " | | | | | | | | 4.5V | " | OUT | | | | | | | | " | " | $\overline{2G}$ to 8Y | " | " | " | " | " | " | " |
| $t_{TLH}$ | 3004 (Fig. 3) | 197 | GND | IN | | | | | | | | " | | | | | | | | OUT | GND | " | 1Y | 2 | 12 | 2 | 16 | 2 | 12 | " |
| | | 198 | " | | IN | | | | | | | " | | | | | | | OUT | | " | " | 2Y | " | " | " | " | " | " | " |
| | | 199 | " | | | IN | | | | | | " | | | | | | OUT | | | " | " | 3Y | " | " | " | " | " | " | " |
| | | 200 | " | | | | IN | | | | | " | | | | | OUT | | | | " | " | 4Y | " | " | " | " | " | " | " |
| | | 201 | " | | | | | IN | | | | " | | | | OUT | | | | | " | " | 5Y | " | " | " | " | " | " | " |
| | | 202 | " | | | | | | IN | | | " | | | OUT | | | | | | " | " | 6Y | " | " | " | " | " | " | " |
| | | 203 | " | | | | | | | IN | | " | | OUT | | | | | | | " | " | 7Y | " | " | " | " | " | " | " |
| | | 204 | " | | | | | | | | IN | " | OUT | | | | | | | | " | " | 8Y | " | " | " | " | " | " | " |
| $t_{THL}$ | 3004 (Fig. 3) | 205 | GND | IN | | | | | | | | " | | | | | | | | OUT | " | " | 1Y | " | " | " | " | " | " | " |
| | | 206 | " | | IN | | | | | | | " | | | | | | | OUT | | " | " | 2Y | " | " | " | " | " | " | " |
| | | 207 | " | | | IN | | | | | | " | | | | | | OUT | | | " | " | 3Y | " | " | " | " | " | " | " |
| | | 208 | " | | | | IN | | | | | " | | | | | OUT | | | | " | " | 4Y | " | " | " | " | " | " | " |
| | | 209 | " | | | | | IN | | | | " | | | | OUT | | | | | " | " | 5Y | " | " | " | " | " | " | " |
| | | 210 | " | | | | | | IN | | | " | | | OUT | | | | | | " | " | 6Y | " | " | " | " | " | " | " |
| | | 211 | " | | | | | | | IN | | " | | OUT | | | | | | | " | " | 7Y | " | " | " | " | " | " | " |
| | | 212 | " | | | | | | | | IN | " | OUT | | | | | | | | " | " | 8Y | " | " | " | " | " | " | " |

See footnotes on next page.

TABLE III. Group A inspection – Continued.

1/ Output pins not designated may be “high” level logic, “low” level logic, or open. Input pins not designated may be “high” level logic or “low” level logic. Exceptions are as follows:

a. $V_{IC}$(pos) tests, the GND terminal shall be open. A minimum limit of 0.4 V applies to tests being performed on equipment not capable of opening the “GND” pin during test.

b. $V_{IC}$(neg) tests, the $V_{CC}$ terminal shall be open.

c. $I_{CC}$ tests, the output terminal shall be open.

2/ See 4.4.1c.

3/ Decrement input in 50 mV steps beginning 100 mV above the maximum limit specified until the output changes from GND to $V_{DD}$. The input voltage where this transition occurs is $V_{T-}$.

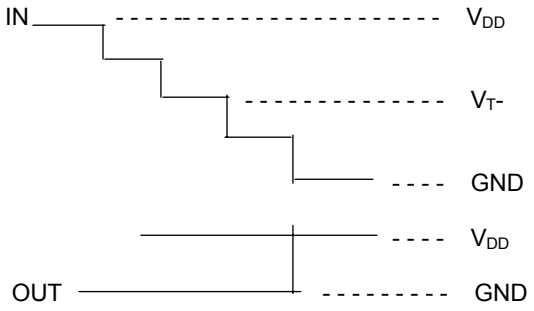


4/ Increment input in 50 mV steps beginning 100 mV below the minimum limit specified until the output changes from $V_{DD}$ to GND. The input voltage where this transition occurs is $V_{T+}$.

5/ $V_H = (V_T+) – (V_T-)$. See table III for $V_H$ limits.

6/ A = 3.7 V
B = 0.4 V

7/ Output shall be: High ≥ 1.5 V; Low ≤ 1.5 V; $I_{OUT}$ = 20 μA.

8/ A = 2.4 V
B = 0.4 V

9/ Three-state output conditions are required. For $I_{OZL}$, set output to high state. For $I_{OZH}$, set output to low state. Set input pins to $V_{IL} = V_{IL}$ (max) and $V_{IH} = V_{IH}$ (min), as required.

4.5 Methods of inspection. Methods of inspection shall be specified and as follows:

4.5.1 Voltage and current. Unless otherwise specified, all voltages given are referenced to the microcircuit GND terminal. Currents given are conventional current and positive when flowing into the referenced terminal.

4.5.2 Burn-in and life test cool down procedures. When the burn-in and life tests are completed and prior to removal of bias voltages, the devices under test (DUT) shall be cooled to within 10°C of their power stable condition at room temperature; then, electrical parameter end-point measurements shall be performed.

TABLE IV. Delta limits at 25°C.

| Parameter 1/ | Device types | |
|---|---|---|
| | All | |
| $I_{CC}$ | | ±30 nA |

1/ The above parameters shall be recorded before and after the required burn-in and life tests to determine deltas (Δ).

4.5.3 Quiescent supply current ($I_{CC}$ test). When performing quiescent supply current measurements ($I_{CC}$), the meter shall be placed so that all currents flow through the meter.

5. PACKAGING

5.1 Packaging requirements. For acquisition purposes, the packaging requirements shall be as specified in the contract or order (see 6.2). When packaging of materiel is to be performed by DoD or in-house contractor personnel, these personnel need to contact the responsible packaging activity to ascertain packaging requirements. Packaging requirements are maintained by the Inventory Control Point's packaging activity within the Military Service or Defense Agency, or within the military service's system commands. Packaging data retrieval is available from the managing Military Department's or Defense Agency's automated packaging files, CD-ROM products, or by contacting the responsible packaging activity.

6. NOTES

(This section contains information of a general or explanatory nature that may be helpful, but is not mandatory.)

6.1 Intended use. Microcircuits conforming to this specification are intended for original equipment design applications and logistic support of existing equipment.

6.2 Acquisition requirements. Acquisition documents should specify the following:

a. Title, number, and date of the specification.

b. PIN and compliance identifier, if applicable (see 1.2).

c. Requirements for delivery of one copy of the quality conformance inspection data pertinent to the device inspection lot to be supplied with each shipment by the device manufacturer, if applicable.

d. Requirements for certificate of compliance, if applicable.

e. Requirements for notification of change of product or process to contracting activity in addition to notification to the qualifying activity, if applicable.

f. Requirements for failure analysis (including required test condition of method 5003 of MIL-STD-883), corrective action, and reporting of results, if applicable.

g. Requirements for product assurance options.

h. Requirements for special carriers, lead lengths, or lead forming, if applicable. These requirements should not affect the part number. Unless otherwise specified, these requirements will not apply to direct purchase by or direct shipment to the Government.

i. Requirements for "JAN" marking.

j. Packaging requirements (see 5.1).

6.3 Superseding information. The requirements of MIL-M-38510 have been superseded to take advantage of the available Qualified Manufacturer Listing (QML) system provided by MIL-PRF-38535. Previous references to MIL-M-38510 in this document have been replaced by appropriate references to MIL-PRF-38535. All technical requirements now consist of this specification and MIL-PRF-38535. The MIL-M-38510 specification sheet number and PIN have been retained to avoid adversely impacting existing government logistics systems and contractors parts lists.

6.4 Qualification. With respect to products requiring qualification, awards will be made only for products which are, at the time of award of contract, qualified for inclusion in Qualified Manufacturers List QML-38535 whether or not such products have actually been so listed by that date. The attention of the contractors is called to these requirements, and manufacturers are urged to arrange to have the products that they propose to offer to the Federal Government tested for qualification in order that they may be eligible to be awarded contracts or purchase orders for the products covered by this specification. Information pertaining to qualification of products may be obtained from DSCC-VQ, P.O. Box 3990, Columbus, Ohio 43218-3990.

6.5 Abbreviations, symbols, and definitions. The abbreviations, symbols, and definitions used herein are defined in MIL-PRF-38535, MIL-HDBK-1331, and as follows:

$C_i$ ..... Input terminal-to-GND capacitance.
$I_{CC}$ ..... Quiescent supply current.
$V_{CC}$ ..... Positive supply voltage.
$V_{IN}$ ..... Voltage level at an input terminal.
$I_{IN}$ ..... Current flowing into an input terminal.
$t_{PHZ}$ ..... Output disable time from high level. The time between the specified reference points on the input and output voltage waveforms with the three-state output changing from the defined high level to a high-impedance (off) state.
$t_{PLZ}$ ..... Output disable time from low level. The time between the specified reference points on the input and output voltage waveforms with the three-state output changing from the defined low level to a high impedance (off) state.
$t_{PZH}$ ..... Output enable time to high level. The time between the specified reference points on the input and output voltage waveforms with the three-state output changing from high impedance (off) state to the defined high level.
$t_{PZL}$ ..... Output enable time to low level. The time between the specified reference points on the input and output voltage waveforms with the three-state output changing from high impedance (off) state to the defined low level.
$I_{OZL}$ ..... Output current in the high-impedance mode with output voltage low.
$I_{OZH}$ ..... Output current in the high-impedance mode with output voltage high.
$C_{PD}$..... Power dissipation capacitance.
$I_{CC}\Delta$ ..... Additional supply current when using worst case TTL input levels.
$T_C$ ..... Case temperature.
GND ..... Ground zero voltage potential.
$T_A$ ..... Free air temperature.

6.6 Logistic support. Lead materials and finishes (see 3.4) are interchangeable. Unless otherwise specified, microcircuits acquired for Government logistic support will be acquired to device class S for National Aeronautics and Space Administration or class B for Department of Defense (see 1.2.2), lead material and finish A (see 3.4). Longer length leads and lead forming should not affect the part number.

6.7 Data reporting. When specified in the purchase order or contract, a copy of the following data, as applicable, will be supplied.

a. Attributes data for all screening tests (see 4.2) and variables data for all static burn-in, dynamic burn-in, and steady-state life tests (see 3.6).

b. A copy of each radiograph.

c. The technology conformance inspection (TCI) data (see 4.4).

d. Parameter distribution data on parameters evaluated during burn-in (see 3.6).

e. Final electrical parameters data (see 4.2d).

6.8 Substitutability. The cross-reference information below is presented for the convenience of users. Microcircuits covered by this specification will functionally replace the listed generic-industry type. Generic-industry microcircuit types may not have equivalent operational performance characteristics across military temperature ranges or reliability factors equivalent to MIL-M-35810 device types and may have slight physical variations in relation to case size. The presence of this information should not be deemed as permitting substitution of generic-industry types for MIL-M-38510 types or as a waiver of any of the provisions of MIL-PRF-38535.

| Military device type | Generic-industry type |
|---|---|
| 01/51 | 54HC04 / 54HCT04 |
| 02/52 | 54HC14 / 54HCT14 |
| 03/53 | 54HC240 / 54HCT240 |
| 04/54 | 54HC241 / 54HCT241 |
| 05/55 | 54HC244 / 54HCT244 |
| 06 | 54HC365 |
| 07 | 54HC366 |
| 08 | 54HC367 |
| 09 | 54HC368 |
| 10/60 | 54HC540 / 54HCT540 |
| 11/61 | 54HC541 / 54HCT541 |

6.9 Changes from previous issue. Marginal notations are not used in this revision to identify changes with respect to the previous issue due to the extent of the changes.

Custodians:
Army - CR
Navy - EC
Air Force - 11
DLA - CC

Preparing activity:
DLA - CC

(Project 5962-2005-023)

Review activities:
Army - MI, SM
Navy - AS, CG, MC, SH, TD
Air Force – 03, 19, 99

NOTE: The activities listed above were interested in this document as of the date of this document. Since organizations and responsibilities can change, you should verify the currency of the information above using ASSIST Online database at http://assist.daps.dla.mil/.