INCH-POUND
MIL-M-38510/651B
12 September 2005

SUPERSEDING
MIL-M-38510/651A
15 May 1987

MILITARY SPECIFICATION

# MICROCIRCUITS, DIGITAL, HIGH-SPEED CMOS, NOR GATES, MONOLITHIC SILICON, POSITIVE LOGIC

Reactivated after 12 Sept. 2005 and may be used for new and existing designs and acquisitions.

This specification is approved for use by all Departments and Agencies of the Department of Defense.

The requirements for acquiring the product herein shall consist of this specification sheet and MIL-PRF 38535.

## 1. SCOPE

1.1 Scope. This specification covers the detail requirements for monolithic silicon, high speed CMOS, logic microcircuits. Two product assurance classes and a choice of case outlines and lead finishes are provided and are reflected in the complete Part or Identifying Number (PIN). For this product, the requirements of MIL-M-38510 have been superseded by MIL-PRF-38535 (see 6.3).

1.2 Part or identifying number (PIN). The PIN is in accordance with MIL-PRF-38535 and as specified herein.

1.2.1 Device types. The device types are as follows:

| Device type | Circuit |
|---|---|
| 01 | Quad 2 - input NOR gate |
| 02 | Triple 3 - input NOR gate |
| 03 | Quad 2 - input exclusive NOR gate (open drain output) |
| 04 | Dual 4-input NOR gate |
| 05 | Quad 2 - input exclusive NOR gate |

1.2.2 Device class. The device class is the product assurance level as defined in MIL-PRF-38535.

1.2.3 Case outlines. The case outlines are as designated in MIL-STD-1835 and as follows:

| Outline letter | Descriptive designator | Terminals | Package style |
|---|---|---|---|
| C | GDIP1-T14 or CDIP2-T14 | 14 | Dual-in-line |
| D | GDFP1-F14 or CDFP2-F14 | 14 | Flat pack |
| 2 | CQCC1-N20 | 20 | Square leadless chip carrier |

Comments, suggestions, or questions on this document should be addressed to: Commander, Defense Supply Center Columbus, ATTN: DSCC-VAC, P.O. Box 3990, Columbus, OH 43218-3990, or email CMOS@dscc.dla.mil. Since contact information can change, you may want to verify the currency of this address information using the ASSIST Online database at http://assist.daps.dla.mil/.

1.3 Absolute maximum ratings.

Supply voltage range ($V_{CC}$) ..... -0.5 V dc to +7.0 V dc
DC input voltage range ($V_{IN}$)..... -0.5 V dc to $V_{CC}$ + 0.5 V dc
DC output voltage range ($V_{OUT}$)..... -0.5 V dc to $V_{CC}$ + 0.5 V dc
Clamp diode current ($I_{IK}$, $I_{OK}$)..... ±20 mA
DC output current per pin ($I_{OUT}$)..... ±25 mA
DC $V_{CC}$ or GND current per pin ($I_{CC}$, $I_{GND}$)..... ±50 mA
Storage temperature range ($T_{STG}$)..... -65°C to +150°C
Maximum power dissipation ($P_D$) ..... 300 mW
Lead temperature (soldering, 10 seconds) ..... 300°C
Thermal resistance, junction to case ($\theta_{JC}$):
Cases C, D, and 2 ..... See MIL-STD-1835
Junction temperature ($T_J$) ..... 175°C

1.4 Recommended operating conditions.

Device types 01, 02, 03, 04, 05:

Maximum input low voltage ($V_{IL}$) ..... 0.3 V at $V_{CC}$ = 2.0 V
0.9 V at $V_{CC}$ = 4.5 V
1.2 V at $V_{CC}$ = 6.0 V
Minimum input high voltage ($V_{IH}$)..... 1.5 V at $V_{CC}$ = 2.0 V
3.15 V at $V_{CC}$ = 4.5 V
4.2 V at $V_{CC}$ = 6.0 V
Supply voltage range ($V_{CC}$) ..... 2.0 V dc to 6.0 V dc
Output voltage range ($V_{OUT}$) ..... 0.0 V to $V_{CC}$
Operating temperature range ($T_A$) ..... -55°C to +125°C
Input rise and fall times ($t_r$, $t_f$) maximum:
$V_{CC}$ = 2.0 V..... 1000 ns
$V_{CC}$ = 4.5 V ..... 500 ns
$V_{CC}$ = 6.0 V ..... 400 ns

2. APPLICABLE DOCUMENTS

2.1 General. The documents listed in this section are specified in sections 3, 4, or 5 of this specification. This section does not include documents cited in other sections of this specification or recommended for additional information or as examples. While every effort has been made to ensure the completeness of this list, document users are cautioned that they must meet all specified requirements of documents cited in sections 3, 4, or 5 of this specification, whether or not they are listed.

2.2 Government documents.

2.2.1 Specifications and Standards. The following specifications and standards form a part of this specification to the extent specified herein. Unless otherwise specified, the issues of these documents are those cited in the solicitation or contract.

DEPARTMENT OF DEFENSE SPECIFICATION

MIL-PRF-38535 - Integrated Circuits (Microcircuits) Manufacturing, General Specification for.

DEPARTMENT OF DEFENSE STANDARDS

MIL-STD-883 - Test Method Standard Microcircuits.
MIL-STD-1835 - Interface Standard Electronic Component Case Outlines.

(Copies of these documents are available online at http://assist.daps.dla.mil/quicksearch/ or http://assist.daps.dla.mil/ or from the Standardization Document Order Desk, 700 Robbins Avenue, Building 4D, Philadelphia, PA 19111-5094.)

2.3 Order of precedence. In the event of a conflict between the text of this document and the references cited herein, the text of this document takes precedence. Nothing in this document, however, supersedes applicable laws and regulations unless a specific exemption has been obtained.

3. REQUIREMENTS

3.1 Qualification. Microcircuits furnished under this specification shall be products that are manufactured by a manufacturer authorized by the qualifying activity for listing on the applicable qualified manufacturers list before contract award (see 4.3 and 6.4). This specification has been modified to allow the manufacturer to use the alternate die/fabrication requirements of paragraph A.3.2.2 of MIL-PRF-38535 or other alternative approved by the qualifying activity.

3.2 Item requirements. The individual item requirements shall be in accordance with MIL-PRF-38535 and as specified herein or as modified in the device manufacturer's Quality Management (QM) plan. The modification in the QM plan shall not affect the form, fit, or function as described herein.

3.3 Design, construction, and physical dimensions. The design, construction, and physical dimensions shall be as specified in MIL-PRF-38535 and herein.

3.3.1 Logic diagrams and terminal connections. The logic diagrams and terminal connections shall be as specified on figure 1.

3.3.2 Truth tables and logic equations. The truth tables and logic equations shall be as specified on figure 2.

3.3.3 Switching time test circuit and waveforms. The switching time test circuit and waveforms shall be as specified on figure 3.

3.3.4 Schematic circuits. The schematic circuits shall be maintained by the manufacturer and made available to the qualifying activity or preparing activity upon request.

3.3.5 Case outlines. The case outlines shall be as specified in 1.2.3 and MIL-STD-1835.

3.4 Lead material and finish. The lead material and finish shall be in accordance with MIL-PRF-38535 (see 6.6).

3.5 Electrical performance characteristics. Unless otherwise specified, the electrical performance characteristics are as specified in table I, and apply over the full recommended ambient operating temperature range.

3.6 Electrical test requirements. The electrical test requirements for each device class shall be the subgroups specified in table II. The electrical tests for each subgroup are described in table III.

3.7 Marking. Marking shall be in accordance with MIL-PRF-38535. For product built in accordance with A.3.2.2 of MIL-PRF-38535, or as modified in the manufacturer's QM plan, the "QD" certification mark shall be used in place of the "Q" or "QML" certification mark.

3.8 Microcircuit group assignment. The devices covered by this specification shall be in microcircuit group number 36 (see MIL-PRF-38535, appendix A).

4. VERIFICATION

4.1 Sampling and inspection. Sampling and inspection procedures shall be in accordance with MIL-PRF-38535 or as modified in the device manufacturer's Quality Management (QM) plan. The modification in the QM plan shall not affect the form, fit, or function as described herein.

4.2 Screening. Screening shall be in accordance with MIL-PRF-38535 and shall be conducted on all devices prior to qualification and conformance inspection. The following additional criteria shall apply:

a. The burn-in test duration, test condition, and test temperature, or approved alternatives shall be as specified in the device manufacturer's QM plan in accordance with MIL-PRF-38535. The burn-in test circuit shall be maintained under document control by the device manufacturer's Technology Review Board (TRB) in accordance with MIL-PRF-38535 and shall be made available to the acquiring or preparing activity upon request. The test circuit shall specify the inputs, outputs, biases, and power dissipation, as applicable, in accordance with the intent specified in method 1015 of MIL-STD-883.

b. Delete the sequence specified as interim (pre-burn-in) electrical parameters through interim (post-burn-in) electrical parameters of table IA of MIL-PRF-38535 and substitute lines 1 through 7 of table II herein.

c. Burn-in (method 1015 of MIL-STD-883).

(1) Unless otherwise specified in the manufacturers QM plan for static tests (test condition A), ambient temperature ($T_A$) shall be +125°C minimum. Test duration for each static test shall be 24 hours minimum for class S devices and in accordance with table I of method 1015 for class B devices.

i. For static burn-in I, all inputs shall be connected to GND. Outputs shall be open or connected to $V_{CC}/2$. Resistors are optional on outputs if open. Resistors are required on inputs and on outputs connected to $V_{CC}/2$. R = 470Ω to 47 kΩ.

ii. For static burn-in II, all inputs shall be connected through the resistors to $V_{CC}$. Output shall be open or connected to $V_{CC}/2$. Resistors are optional on outputs if open. Resistors are required on inputs and on outputs connected to $V_{CC}/2$. R = 470Ω to 47 kΩ.

(2) Unless otherwise specified in the manufacturers QM plan for dynamic test (test condition D), ambient temperature shall be +125°C minimum. Test duration shall be in accordance with table I of method 1015.

i. For dynamic burn-in, all inputs shall be connected through the resistors in parallel to a common CP. Outputs shall be connected to $V_{CC}/2$ ±0.5 V through the resistors. R = 1 kΩ ±5% for outputs, 470Ω to 47 kΩ for inputs. For device types 03 and 05 only, one input for each gate shall be connected to $V_{CC}$ or GND.

ii. CP = 25 kHz to 1 MHz square wave; duty cycle = 50% ±15%; $V_{IH}$ = 4.5 V to $V_{CC}$; $V_{IL}$ = 0.0 V ±0.5 V; transition time ≤ 0.5 μs.

iii. $V_{CC}$ = 6.0 V ±0.5 V.

d. Interim and final electrical test parameters shall be as specified in table II.

e. For class S devices, post dynamic burn-in, or class B devices, post static burn-in, electrical parameter measurements may, at the manufacturer's option, be performed separately or included in the final electrical parameter requirements.

4.2.1 Percent defective allowable (PDA).

a. The PDA for class S devices shall be 5 percent for static burn-in and 5 percent for dynamic burn-in, based on the exact number of devices submitted to each separate burn-in.

b. Static burn-in I and II failure shall be cumulative for determining the PDA.

c. The PDA for class B devices shall be in accordance with MIL-PRF-38535 for static burn-in. Dynamic burn-in is not required.

d. Those devices whose measured characteristics, after burn-in, exceed the specified delta (Δ) limits or electrical parameter limits specified in table III, subgroup 1, are defective and shall be removed from the lot. The verified failures divided by the total number of devices in the lot initially submitted to burn-in shall be used to determine the percent defective for the lot and the lot shall be accepted or rejected based on the specified PDA.

4.3 Qualification inspection. Qualification inspection shall be in accordance with MIL-PRF-38535.

4.4 Technology Conformance inspection (TCI). Technology conformance inspection shall be in accordance with MIL-PRF-38535 and herein for groups A, B, C, and D inspections (see 4.4.1 through 4.4.4).

4.4.1 Group A inspection. Group A inspection shall be in accordance with table III of MIL-PRF-38535 and as follows:

a. Tests shall be performed in accordance with table II herein.

b. Subgroups 5, 6, 7, and 8 shall be omitted.

c. Subgroup 4 ($C_{IN}$ measurement) shall be measured only for initial qualification and after process or design changes that may affect input capacitance. Capacitance shall be measured between the designated terminal and $V_{SS}$ at a frequency of 1 MHz.

d. Subgroups 9 and 11 shall be measured only for initial qualification and after process or design changes which may affect dynamic performance.

4.4.2 Group B inspection. Group B inspection shall be in accordance with table II of MIL-PRF-38535.

4.4.3 Group C inspection. Group C inspection shall be in accordance with table IV of MIL-PRF-38535 and as follows:

a. End-point electrical parameters shall be as specified in table II herein. Delta limits shall apply only to subgroup 1 of group C inspection and shall consist of tests specified in table IV herein.

b. The steady-state life test duration, test condition, and test temperature, or approved alternatives shall be as specified in the device manufacturer's QM plan in accordance with MIL-PRF-38535. The burn-in test circuit shall be maintained under document control by the device manufacturer's Technology Review Board (TRB) in accordance with MIL-PRF-38535 and shall be made available to the acquiring or preparing activity upon request. The test circuit shall specify the inputs, outputs, biases, and power dissipation, as applicable, in accordance with the intent specified in method 1005 of MIL-STD-883.

4.4.4 Group D inspection. Group D inspection shall be in accordance with table V of MIL-PRF-38535. End-point electrical parameters shall be as specified in table II herein.

4.5 Methods of inspection. Methods of inspection shall be specified and as follows:

4.5.1 Voltage and current. Unless otherwise specified, all voltages given are referenced to the microcircuit GND terminal. Currents given are conventional current and positive when flowing into the referenced terminal.

TABLE I. Electrical performance characteristics.

| Test | Symbol | Conditions 1/ $-55°C \le T_C \le +125°C$ unless otherwise specified | Device type | $V_{CC}$ | Limits | | Unit |
|---|---|---|---|---|---|---|---|
| | | | | | Min | Max | |
| High level output voltage | $V_{OH1}$ 2/ | $V_{IH}$ = 1.5 V<br>$V_{IL}$ = 0.3 V<br>$I_{OH}$ = -20 μA | 01, 02, 04, 05 | 2.0 V | 1.95 | | V |
| | $V_{OH2}$ 2/ | $V_{IH}$ = 3.15 V<br>$V_{IL}$ = 0.9 V<br>$I_{OH}$ = -20 μA | 01, 02, 04, 05 | 4.5 V | 4.45 | | V |
| | $V_{OH3}$ | $V_{IH}$ = 4.2 V<br>$V_{IL}$ = 1.2 V<br>$I_{OH}$ = -20 μA | 01, 02, 04, 05 | 6.0 V | 5.95 | | V |
| | $V_{OH4}$ 2/ | $V_{IH}$ = 3.15 V<br>$V_{IL}$ = 0.9 V<br>$I_{OH}$ = -4.0 mA | 01, 02, 04, 05 | 4.5 V | 3.7 | | V |
| | $V_{OH5}$ | $V_{IH}$ = 4.2 V<br>$V_{IL}$ = 1.2 V<br>$I_{OH}$ = -5.2 mA | 01, 02, 04, 05 | 6.0 V | 5.2 | | V |
| Low level output voltage | $V_{OL1}$ 2/ | $V_{IL}$ = 0.3 V<br>$V_{IH}$ = 1.5 V<br>$I_{OL}$ = 20 μA | All | 2.0 V | | 0.05 | V |
| | $V_{OL2}$ 2/ | $V_{IL}$ = 0.9 V<br>$V_{IH}$ = 3.15 V<br>$I_{OL}$ = 20 μA | All | 4.5 V | | 0.05 | V |
| | $V_{OL3}$ | $V_{IL}$ = 1.2 V<br>$V_{IH}$ = 4.2 V<br>$I_{OL}$ = 20 μA | All | 6.0 V | | 0.05 | V |
| | $V_{OL4}$ 2/ | $V_{IL}$ = 0.9 V<br>$V_{IH}$ = 3.15 V<br>$I_{OL}$ = 4.0 mA | All | 4.5 V | | 0.4 | V |
| | $V_{OL5}$ | $V_{IL}$ = 1.2 V<br>$V_{IH}$ = 4.2 V<br>$I_{OL}$ = 5.2 mA | All | 6.0 V | | 0.4 | V |
| Positive input clamp voltage | $V_{IC(pos)}$ | $I_{IN}$ = 1 mA<br>$T_C$ = 25°C | All | GND | | 1.5 | V |
| Negative input clamp voltage | $V_{IC(neg)}$ | $I_{IN}$ = -1 mA<br>$T_C$ = 25°C | All | OPEN | | -1.5 | V |

See footnotes at end of table.

TABLE I. Electrical performance characteristics – Continued.

| Test | Symbol | Conditions 1/ -55°C ≤ $T_C$ ≤ +125°C unless otherwise specified | Device type | $V_{CC}$ | Limits | | Unit |
|---|---|---|---|---|---|---|---|
| | | | | | Min | Max | |
| High-level output current | $I_{OH}$ | $V_{IN}$ = 1.2 V or 4.2 V<br>$V_{OUT}$ = $V_{CC}$ | 03 | 6.0 V | | 10 | μA |
| Input current low | $I_{IL}$ | $V_{IN}$ = GND | All | 6.0 V | | -0.1 | μA |
| Input current high | $I_{IH}$ | $V_{IN}$ = $V_{CC}$ | All | 6.0 V | | 0.1 | μA |
| Short circuit output current | $I_{OS1}$ 2/ | $T_C$ = -55°C to +125°C<br>$V_{OUT}$ = GND<br>$V_{IN}$ = GND | 01, 02, 04, 05 | 2.0 V | -2 | -50 | mA |
| | $I_{OS2}$ 2/ | | | 4.5 V | -15 | -150 | |
| | $I_{OS3}$ 2/ | | | 6.0 V | -25 | -180 | |
| | $I_{OS4}$ | | | 4.0 V | -10 | -120 | |
| Quiescent supply current | $I_{CC}$ | $V_{IN}$ = 6.0 V or GND | All | 6.0 V | | 10.0 | μA |
| Input capacitance | $C_{IN}$ | $T_C$ = +25°C | All | | | 10 | pF |
| Power dissipation capacitance | $C_{PD}$ 2/ 3/ | $T_C$ = +25°C | 01 | | | 26 | pF |
| | | | 02 | | | 36 | |
| | | | 03 | | | 35 | |
| | | | 04 | | | 25 | |
| | | | 05 | | | 33 | |
| Propagation delay times 4/ 5/ | $t_{PHL}$, $t_{PLH}$ | $C_L$ = 50 pF ± 10%<br>$R_1$ = 1 kΩ ± 5% for device type 03 only | 01 | 4.5 V | 3 | 21 | ns |
| | | | 02 | 4.5 V | 3 | 22 | ns |
| | | | 04 | 4.5 V | 3 | 28 | ns |
| Propagation delay time, high-to-low level (other input low) 4/ 5/ | $t_{PHL1}$ | | 05 | 4.5 V | 3 | 29 | ns |
| | $t_{PHL1}$ | | 03 | | | | |
| Propagation delay time, high-to-low level (other input high) 4/ 5/ | $t_{PHL2}$ | | 05 | 4.5 V | 3 | 29 | ns |
| | $t_{PHL2}$ | | 03 | | | | |
| Propagation delay time, low-to-high level (other input low) 4/ 5/ | $t_{PLH1}$ | | 05 | 4.5 V | 3 | 29 | ns |
| | $t_{PLH3}$ | | 03 | 4.5 V | 3 | 20 | ns |
| Propagation delay time, low-to-high level (other input high) 4/ 5/ | $t_{PLH2}$ | | 05 | 4.5 V | 3 | 29 | ns |
| | $t_{PLH4}$ | | 03 | 4.5 V | 3 | 20 | ns |
| Transition delay times 4/ 5/ | $t_{THL}$, $t_{TLH}$ | $C_L$ = 50 pF ± 10% | 01 | 4.5 V | 3 | 20 | ns |
| | | | 02 | 4.5 V | 3 | 20 | ns |
| | $t_{THL}$ only | | 03 | 4.5 V | 3 | 20 | ns |
| | $t_{THL}$, $t_{TLH}$ | | 04 | 4.5 V | 3 | 20 | ns |
| | | | 05 | 4.5 V | 3 | 20 | ns |

See footnotes on next page.

TABLE I. Electrical performance characteristics – Continued.

1/ Complete terminal conditions shall be as specified in table III.
2/ Guaranteed but not tested.
3/ Power dissipation capacitance ($C_{PD}$) per gate.
4/ Tested at $V_{CC}$ = 4.5 V at +125°C for sample testing and $V_{CC}$ = 4.5 V at +25°C for screening. Guaranteed at other $V_{CC}$ voltages and temperatures. See table IA and exception in 4.4.1d.
5/ For propagation and transition delay times at $V_{CC}$ = 2.0 V, increase limit by a factor of 5. For propagation and transition delay times at $V_{CC}$ = 6.0 V, decrease limit by a factor of .85.

TABLE IA. Calculated dynamic figures at -55°C or +25°C case temperature. 1/ 2/

| $V_{CC}$ | $T_C$ | |
|---|---|---|
| | +125°C | -55°C or +25°C |
| 2.0 V | 5 | 5 x 0.75 |
| | ↑ | ↑ |
| 4.5 V | 1 → | → 0.75 |
| | ↓ | ↓ |
| 6.0 V | 0.85 | 0.85 x 0.75 |

1/ Normalized numbers (+125°C equals 1)
2/ The 2.0 V and 6.0 V numbers are derived from their 4.5 V integer value. Rounding off according 5/4.

TABLE II. Burn-in and electrical test requirements.

| Line no. | MIL-PRF-38535 test requirements | Class S device 1/ | | | Class B device 1/ | | |
|---|---|---|---|---|---|---|---|
| | | Ref. par. | Table III Subgroups 2/ | Table IV delta limits 3/ | Ref. par. | Table III subgroups 2/ | Table IV delta limits 3/ |
| 1 | Interim electrical parameters | | 1 | | | 1 | |
| 2 | Static burn-in I (method 1015) | 4.2c 4.5.2 | Req'd | | | Not req'd | |
| 3 | Same as line 1 | | 1* | Δ | | | |
| 4 | Static burn-in II (method 1015) | 4.2c 4.5.2 | Req'd | | 4.2c 4.5.2 | 4/ req'd | |
| 5 | Same as line 1 | 4.2e | 1* | Δ | 4.2e | 1* | Δ |
| 6 | Dynamic burn-in (method 1015) | 4.2c 4.5.2 | Req'd | | | Not req'd | |
| 7 | Same as line 1 | 4.2e | 1 | Δ | | | |
| 8 | Final electrical parameters | | 1*, 2, 3, 9 | | | 1*, 2, 9 4/ | |
| 9 | Group A test requirements | 4.4.1 | 1, 2, 3, 4, 9, 10, 11 | | 4.4.1 | 1, 2, 3, 4, 9, 10, 11 | |
| 10 | Group B test when using method 5005 QCI option | 4.4.2 | 1, 2, 3, 9, 10, 11 | Δ | | | |
| 11 | Group C end-point electrical parameters | 4.4.2 | 1, 2, 3, 9, 10, 11 | Δ | 4.4.3 | 1, 2 | Δ |
| 12 | Group D end-point electrical parameters | 4.4.4 | 1, 2, 3 | | 4.4.4 | 1, 2 | |

1/ Blank spaces indicate tests are not applicable.

2/ * indicates PDA applies to subgroup 1 (see 4.2.1).

3/ Δ indicates delta limits shall be required only on table III, subgroup 1, where specified, and the delta values shall be computed with reference to the previous interim electrical parameters.

4/ The device manufacturer may, at his option, either complete subgroup 1 electrical parameter measurements, including delta measurements, within 96 hours after burn-in completion (removal of bias); or may complete subgroup 1 electrical measurements without delta measurements within 24 hours after burn-in completion (removal of bias).

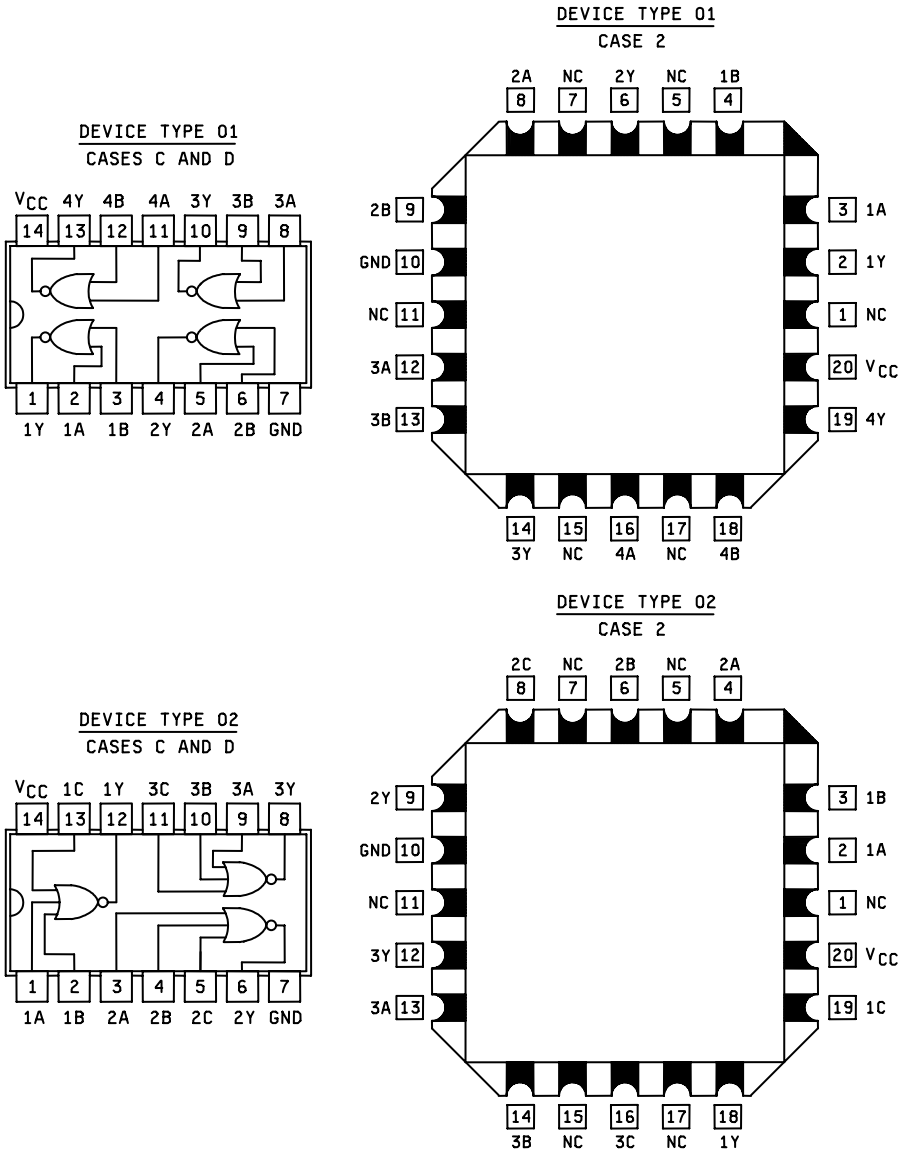


FIGURE 1. Logic diagrams and terminal connections (top views).

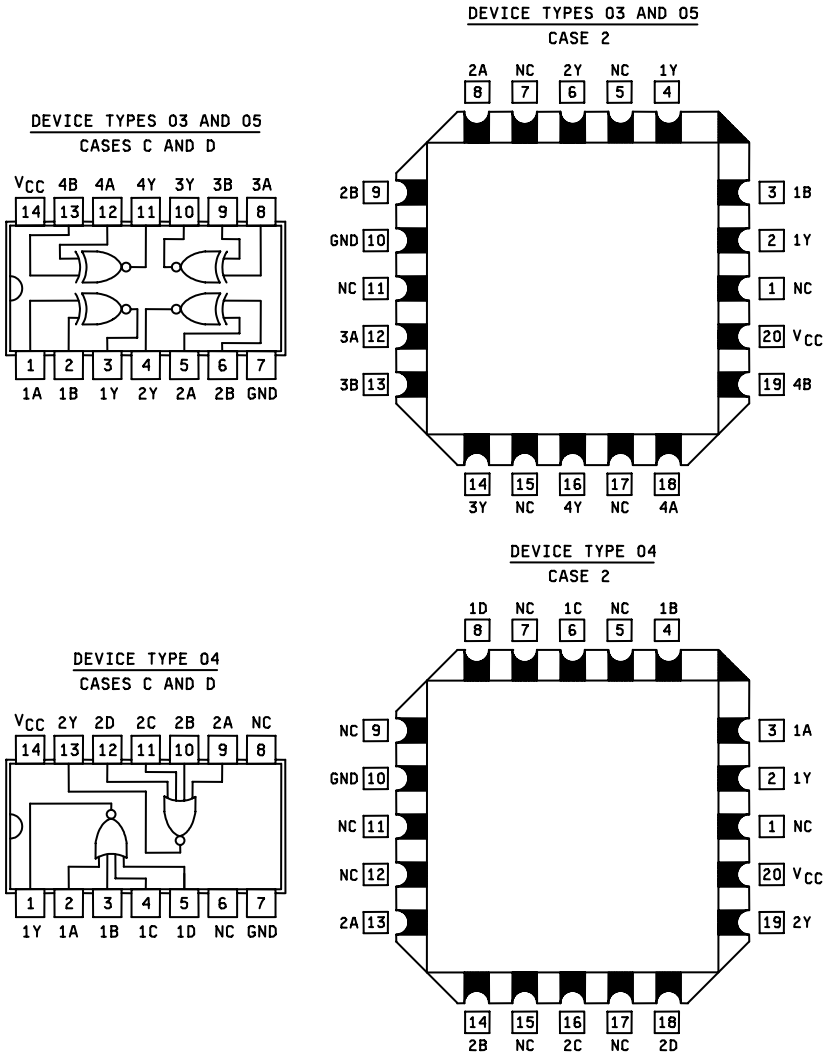


FIGURE 1. Logic diagrams and terminal connections (top views) – Continued.

Device type 01

| Truth table, each gate | | |
|---|---|---|
| Inputs | | Output |
| A | B | Y |
| H | X | L |
| X | H | L |
| L | L | H |

Positive logic: $Y = \overline{A + B}$

Device type 02

| Truth table, each gate | | | |
|---|---|---|---|
| Inputs | | | Output |
| A | B | C | Y |
| H | X | X | L |
| X | H | X | L |
| X | X | H | L |
| L | L | L | H |

Positive logic: $Y = \overline{A + B + C}$

Device type 04

| Truth table, each gate | | | | |
|---|---|---|---|---|
| Inputs | | | | Output |
| A | B | C | D | Y |
| L | L | L | L | H |
| H | L | L | L | L |
| L | H | L | L | L |
| H | H | L | L | L |
| L | L | H | L | L |
| H | L | H | L | L |
| L | H | H | L | L |
| H | H | H | L | L |
| L | L | L | H | L |
| H | L | L | H | L |
| L | H | L | H | L |
| H | H | L | H | L |
| L | L | H | H | L |
| H | L | H | H | L |
| L | H | H | H | L |
| H | H | H | H | L |

Positive logic: $Y = \overline{A + B + C + D}$

Device types 03 and 05

| Truth table, each gate | | |
|---|---|---|
| Inputs | | Output |
| A | B | Y |
| L | L | H |
| L | H | L |
| H | L | L |
| H | H | H |

Positive logic: $Y = \overline{A \oplus B} = AB + \overline{A}\,\overline{B}$
H = High voltage level
L = Low voltage level
X = Irrelevant

FIGURE 2. Truth tables and logic equations.

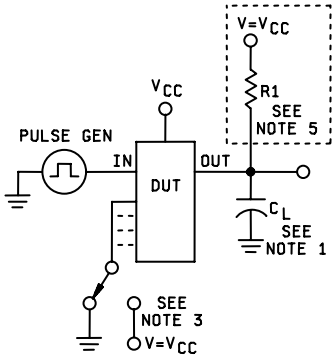


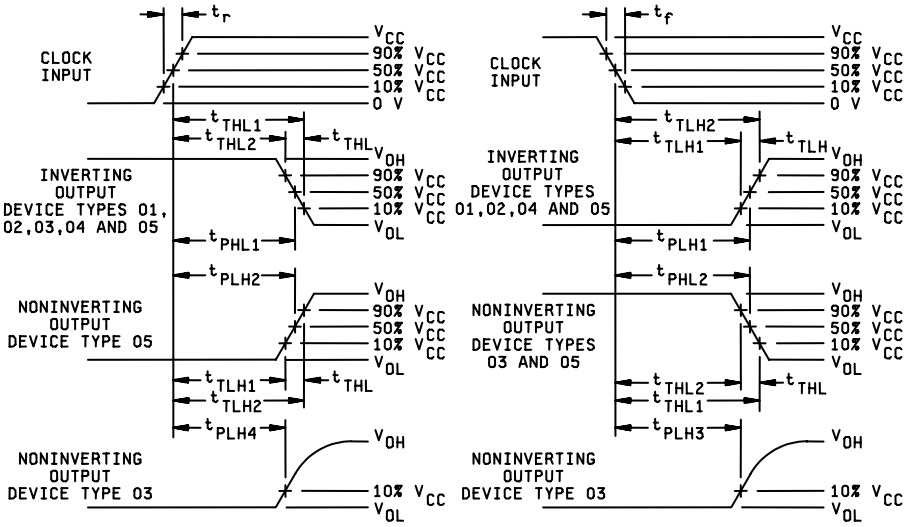


NOTES:

1. $C_L$ = 50 pF ±10%, includes test jig and probe capacitance.
2. Input pulse shall have the following characteristics: $t_r = t_f \leq 6$ ns; PRR ≤ 1MHz; duty cycle = 50%.
3. All unused inputs are tied to $V_{CC}$ or GND for device types 03 and 05, and to GND for device types 01, 02, and 04 as defined in table III.
4. $t_{THL1} - t_{THL2} = t_{THL}$; $t_{TLH2} - t_{TLH1} = t_{TLH}$.
5. $R_1$ = 1 kΩ ±5% tied to a voltage equal to $V_{CC}$ for loading device type 03 only.

FIGURE 3. Switching time test circuit and waveforms.

TABLE III. Group A inspection for device type 01.

| Symbol | MIL-STD-883 method | Case | Terminal conditions 1/ | | | | | | | | | | | | | | Measured terminal | Test limits | | | | | | Unit |
|---|---|---|---|---|---|---|---|---|---|---|---|---|---|---|---|---|---|---|---|---|---|---|---|---|
| | | 2 | 2 | 3 | 4 | 6 | 8 | 9 | 10 | 12 | 13 | 14 | 16 | 18 | 19 | 20 | | Subgroup 1 | | Subgroup 2 | | Subgroup 3 | | |
| | | C,D | 1 | 2 | 3 | 4 | 5 | 6 | 7 | 8 | 9 | 10 | 11 | 12 | 13 | 14 | | $T_C$ = +25°C | | $T_C$ = +125°C | | $T_C$ = -55°C | | |
| | | Test no. | 1Y | 1A | 1B | 2Y | 2A | 2B | GND | 3A | 3B | 3Y | 4A | 4B | 4Y | $V_{CC}$ | | Min | Max | Min | Max | Min | Max | |
| $V_{IC}$ (pos) 1/ | | 1 | | 1mA | | | | | 1/ | | | | | | | GND | 1A | 1/ | 1.5 | | | | | V |
| | | 2 | | | 1mA | | | | " | | | | | | | " | 1B | " | " | | | | | " |
| | | 3 | | | | | 1mA | | " | | | | | | | " | 2A | " | " | | | | | " |
| | | 4 | | | | | | 1mA | " | | | | | | | " | 2B | " | " | | | | | " |
| | | 5 | | | | | | | " | 1mA | | | | | | " | 3A | " | " | | | | | " |
| | | 6 | | | | | | | " | | 1mA | | | | | " | 3B | " | " | | | | | " |
| | | 7 | | | | | | | " | | | | 1mA | | | " | 4A | " | " | | | | | " |
| | | 8 | | | | | | | " | | | | | 1mA | | " | 4B | " | " | | | | | " |
| $V_{IC}$ (neg) 1/ | | 9 | | -1mA | | | | | GND | | | | | | | 1/ | 1A | | -1.5 | | | | | " |
| | | 10 | | | -1mA | | | | " | | | | | | | " | 1B | | " | | | | | " |
| | | 11 | | | | | -1mA | | " | | | | | | | " | 2A | | " | | | | | " |
| | | 12 | | | | | | -1mA | " | | | | | | | " | 2B | | " | | | | | " |
| | | 13 | | | | | | | " | -1mA | | | | | | " | 3A | | " | | | | | " |
| | | 14 | | | | | | | " | | -1mA | | | | | " | 3B | | " | | | | | " |
| | | 15 | | | | | | | " | | | | -1mA | | | " | 4A | | " | | | | | " |
| | | 16 | | | | | | | " | | | | | -1mA | | " | 4B | | " | | | | | " |
| $I_{CC}$ | 3005 | 17 | | 6V | 6V | | 6V | 6V | " | 6V | 6V | | 6V | 6V | | 6V | $V_{CC}$ | | 0.1 | | 10 | | | µA |
| | | 18 | | GND | GND | | GND | GND | " | GND | GND | | GND | GND | | " | $V_{CC}$ | | 0.1 | | 10 | | | µA |
| $V_{OH3}$ | 3006 | 19 | -20µA | 1.2V | 1.2V | | | | " | | | | | | | " | 1Y | 5.95 | | 5.95 | | 5.95 | | V |
| | | 20 | | | | -20µA | 1.2V | 1.2V | " | | | | | | | " | 2Y | " | | " | | " | | " |
| | | 21 | | | | | | | " | 1.2V | 1.2V | -20µA | | | | " | 3Y | " | | " | | " | | " |
| | | 22 | | | | | | | " | | | | 1.2V | 1.2V | -20µA | " | 4Y | " | | " | | " | | " |
| $V_{OH5}$ | 3006 | 23 | Same tests and terminal conditions as for $V_{OH3}$, except as noted on the following line. | | | | | | | | | | | | | | | | | | | | | |
| | | to | -5.2mA | | | -5.2mA | | | | | | -5.2mA | | | -5.2mA | | | 5.48 | | 5.2 | | 5.48 | | V |
| | | 26 | | | | | | | | | | | | | | | | | | | | | | |
| $V_{OL3}$ | 3007 | 27 | 20µA | 4.2V | 1.2V | | | | GND | | | | | | | 6V | 1Y | | .05 | | .05 | | .05 | " |
| | | 28 | 20µA | 1.2V | 4.2V | | | | " | | | | | | | " | 1Y | | " | | " | | " | " |
| | | 29 | | | | 20µA | 4.2V | 1.2V | " | | | | | | | " | 2Y | | " | | " | | " | " |
| | | 30 | | | | 20µA | 1.2V | 4.2V | " | | | | | | | " | 2Y | | " | | " | | " | " |
| | | 31 | | | | | | | " | 4.2V | 1.2V | 20µA | | | | " | 3Y | | " | | " | | " | " |
| | | 32 | | | | | | | " | 1.2V | 4.2V | 20µA | | | | " | 3Y | | " | | " | | " | " |
| | | 33 | | | | | | | " | | | | 4.2V | 1.2V | 20µA | " | 4Y | | " | | " | | " | " |
| | | 34 | | | | | | | " | | | | 1.2V | 4.2V | 20µA | " | 4Y | | " | | " | | " | " |
| $V_{OL5}$ | 3007 | 35 | Same tests and terminal conditions as for $V_{OL3}$, except as noted on the following line. | | | | | | | | | | | | | | | | | | | | | |
| | | to | 5.2mA | | | 5.2mA | | | | | | 5.2mA | | | 5.2mA | | | | .26 | | .4 | | .26 | V |
| | | 42 | | | | | | | | | | | | | | | | | | | | | | |
| $I_{OS4}$ | 3011 | 43 | GND | GND | GND | | | | GND | | | | | | | 4V | 1Y | -10 | -120 | -10 | -120 | -10 | -120 | mA |
| | | 44 | | | | GND | GND | GND | " | | | | | | | " | 2Y | " | " | " | " | " | " | " |
| | | 45 | | | | | | | " | GND | GND | GND | | | | " | 3Y | " | " | " | " | " | " | " |
| | | 46 | | | | | | | " | | | | GND | GND | GND | " | 4Y | " | " | " | " | " | " | " |

See footnotes at end of table.

TABLE III. Group A inspection for device type 01 – Continued.

| Symbol | MIL-STD-883 method | Case 2 / C,D / Test no. | Terminal conditions 1/ 2 / 1 / 1Y | 3 / 2 / 1A | 4 / 3 / 1B | 6 / 4 / 2Y | 8 / 5 / 2A | 9 / 6 / 2B | 10 / 7 / GND | 12 / 8 / 3A | 13 / 9 / 3B | 14 / 10 / 3Y | 16 / 11 / 4A | 18 / 12 / 4B | 19 / 13 / 4Y | 20 / 14 / $V_{CC}$ | Measured terminal | Test limits: Subgroup 1 $T_C$ = +25°C Min | Subgroup 1 Max | Subgroup 2 $T_C$ = +125°C Min | Subgroup 2 Max | Subgroup 3 $T_C$ = -55°C Min | Subgroup 3 Max | Unit |
|---|---|---|---|---|---|---|---|---|---|---|---|---|---|---|---|---|---|---|---|---|---|---|---|---|
| $I_{IH}$ | 3010 | 47 | | 6V | GND | | | | GND | | | | | | | 6V | 1A | | .05 | | .1 | | | µA |
| | | 48 | | GND | 6V | | | | “ | | | | | | | “ | 1B | | “ | | “ | | | “ |
| | | 49 | | | | | 6V | GND | “ | | | | | | | “ | 2A | | “ | | “ | | | “ |
| | | 50 | | | | | GND | 6V | “ | | | | | | | “ | 2B | | “ | | “ | | | “ |
| | | 51 | | | | | | | “ | 6V | GND | | | | | “ | 3A | | “ | | “ | | | “ |
| | | 52 | | | | | | | “ | GND | 6V | | | | | “ | 3B | | “ | | “ | | | “ |
| | | 53 | | | | | | | “ | | | | 6V | GND | | “ | 4A | | “ | | “ | | | “ |
| | | 54 | | | | | | | “ | | | | GND | 6V | | “ | 4B | | “ | | “ | | | “ |
| $I_{IL}$ | 3009 | 55 | | GND | 6V | | | | “ | | | | | | | “ | 1A | | -.05 | | -.1 | | | “ |
| | | 56 | | 6V | GND | | | | “ | | | | | | | “ | 1B | | “ | | “ | | | “ |
| | | 57 | | | | | GND | 6V | “ | | | | | | | “ | 2A | | “ | | “ | | | “ |
| | | 58 | | | | | 6V | GND | “ | | | | | | | “ | 2B | | “ | | “ | | | “ |
| | | 59 | | | | | | | “ | GND | 6V | | | | | “ | 3A | | “ | | “ | | | “ |
| | | 60 | | | | | | | “ | 6V | GND | | | | | “ | 3B | | “ | | “ | | | “ |
| | | 61 | | | | | | | “ | | | | GND | 6V | | “ | 4A | | “ | | “ | | | “ |
| | | 62 | | | | | | | “ | | | | 6V | GND | | “ | 4B | | “ | | “ | | | “ |
| | | | | | | | | | | | | | | | | | | Subgroup 4 $T_C$ = +25°C Min | Max | | | | | |
| $C_i$ | 3012 | 63 | | 2/ | | | | | GND | | | | | | | GND | 1A | | 10 | | | | | pF |
| | | 64 | | | 2/ | | | | “ | | | | | | | “ | 1B | | “ | | | | | “ |
| | | 65 | | | | | 2/ | | “ | | | | | | | “ | 2A | | “ | | | | | “ |
| | | 66 | | | | | | 2/ | “ | | | | | | | “ | 2B | | “ | | | | | “ |
| | | 67 | | | | | | | “ | 2/ | | | | | | “ | 3A | | “ | | | | | “ |
| | | 68 | | | | | | | “ | | 2/ | | | | | “ | 3B | | “ | | | | | “ |
| | | 69 | | | | | | | “ | | | | 2/ | | | “ | 4A | | “ | | | | | “ |
| | | 70 | | | | | | | “ | | | | | 2/ | | “ | 4B | | “ | | | | | “ |
| | | | | | | | | | | | | | | | | | | 3/ Subgroup 9 $T_C$ = +25°C Min | Max | Subgroup 10 $T_C$ = +125°C Min | Max | 3/ Subgroup 11 $T_C$ = -55°C Min | Max | |
| $t_{PHL}$ | 3003 (Fig. 3) | 71 | OUT | IN | GND | | | | GND | | | | | | | 4.5V | 1A to 1Y | 3 | 16 | 3 | 21 | 3 | 16 | ns |
| | | 72 | OUT | GND | IN | | | | “ | | | | | | | “ | 1B to 1Y | “ | “ | “ | “ | “ | “ | “ |
| | | 73 | | | | OUT | IN | GND | “ | | | | | | | “ | 2A to 2Y | “ | “ | “ | “ | “ | “ | “ |
| | | 74 | | | | OUT | GND | IN | “ | | | | | | | “ | 2B to 2Y | “ | “ | “ | “ | “ | “ | “ |
| | | 75 | | | | | | | “ | IN | GND | OUT | | | | “ | 3A to 3Y | “ | “ | “ | “ | “ | “ | “ |
| | | 76 | | | | | | | “ | GND | IN | OUT | | | | ” | 3B to 3Y | “ | “ | “ | “ | “ | “ | “ |
| | | 77 | | | | | | | “ | | | | IN | GND | OUT | “ | 4A to 4Y | “ | “ | “ | “ | “ | “ | “ |
| | | 78 | | | | | | | “ | | | | GND | IN | OUT | “ | 4B to 4Y | “ | “ | “ | “ | “ | “ | “ |
| $t_{PLH}$ | 3003 (Fig. 3) | 79 to 86 | Same terminal conditions and limits as specified above for $t_{PHL}$. | | | | | | | | | | | | | | | | | | | | | |
| $t_{THL}$ | 3004 (Fig. 3) | 87 | OUT | IN | GND | | | | GND | | | | | | | 4.5V | 1Y | 3 | 15 | 3 | 20 | 3 | 15 | ns |
| | | 88 | | | | OUT | IN | GND | “ | | | | | | | “ | 2Y | “ | “ | “ | “ | “ | “ | “ |
| | | 89 | | | | | | | “ | IN | GND | OUT | | | | “ | 3Y | “ | “ | “ | “ | “ | “ | “ |
| | | 90 | | | | | | | “ | | | | IN | GND | OUT | “ | 4Y | “ | “ | “ | “ | “ | “ | “ |
| $t_{TLH}$ | 3004 (Fig. 3) | 91 to 94 | Same terminal conditions and limits as specified above for $t_{THL}$. | | | | | | | | | | | | | | | | | | | | | |

See footnotes at end of table.

TABLE III. Group A inspection for device type 02.

| Symbol | MIL-STD-883 method | Case | Terminal conditions 1/ | | | | | | | | | | | | | | Measured terminal | Test limits | | | | | | Unit |
|---|---|---|---|---|---|---|---|---|---|---|---|---|---|---|---|---|---|---|---|---|---|---|---|---|
| | | 2 | 2 | 3 | 4 | 6 | 8 | 9 | 10 | 12 | 13 | 14 | 16 | 18 | 19 | 20 | | Subgroup 1 | | Subgroup 2 | | Subgroup 3 | | |
| | | C,D | 1 | 2 | 3 | 4 | 5 | 6 | 7 | 8 | 9 | 10 | 11 | 12 | 13 | 14 | | $T_C$ = +25°C | | $T_C$ = +125°C | | $T_C$ = -55°C | | |
| | | Test no. | 1A | 1B | 2A | 2B | 2C | 2Y | GND | 3Y | 3A | 3B | 3C | 1Y | 1C | $V_{CC}$ | | Min | Max | Min | Max | Min | Max | |
| $V_{IC}$ (pos) 1/ | | 1 | 1mA | | | | | | 1/ | | | | | | | GND | 1A | 1/ | 1.5 | | | | | V |
| | | 2 | | 1mA | | | | | " | | | | | | | " | 1B | " | " | | | | | " |
| | | 3 | | | | | | | " | | | | | | 1mA | " | 1C | " | " | | | | | " |
| | | 4 | | | 1mA | | | | " | | | | | | | " | 2A | " | " | | | | | " |
| | | 5 | | | | 1mA | | | " | | | | | | | " | 2B | " | " | | | | | " |
| | | 6 | | | | | 1mA | | " | | | | | | | " | 2C | " | " | | | | | " |
| | | 7 | | | | | | | " | | 1mA | | | | | " | 3A | " | " | | | | | " |
| | | 8 | | | | | | | " | | | 1mA | | | | " | 3B | " | " | | | | | " |
| | | 9 | | | | | | | " | | | | 1mA | | | " | 3C | " | " | | | | | " |
| $V_{IC}$ (neg) 1/ | | 10 | -1mA | | | | | | GND | | | | | | | 1/ | 1A | | -1.5 | | | | | " |
| | | 11 | | -1mA | | | | | " | | | | | | | " | 1B | | " | | | | | " |
| | | 12 | | | | | | | " | | | | | | -1mA | " | 1C | | " | | | | | " |
| | | 13 | | | -1mA | | | | " | | | | | | | " | 2A | | " | | | | | " |
| | | 14 | | | | -1mA | | | " | | | | | | | " | 2B | | " | | | | | " |
| | | 15 | | | | | -1mA | | " | | | | | | | " | 2C | | " | | | | | " |
| | | 16 | | | | | | | " | | -1mA | | | | | " | 3A | | " | | | | | " |
| | | 17 | | | | | | | " | | | -1mA | | | | " | 3B | | " | | | | | " |
| | | 18 | | | | | | | " | | | | -1mA | | | " | 3C | | " | | | | | " |
| $I_{CC}$ | 3005 | 19 | 6 V | 6 V | 6 V | 6 V | 6 V | | " | | 6 V | 6 V | 6 V | | 6 V | 6 V | $V_{CC}$ | | 0.1 | | 10 | | | µA |
| | | 20 | GND | GND | GND | GND | GND | | " | | GND | GND | GND | | GND | " | $V_{CC}$ | | 0.1 | | 10 | | | µA |
| $V_{OH3}$ | 3006 | 21 | 1.2V | 1.2V | | | | | " | | | | | -20µA | 1.2V | " | 1Y | 5.95 | | 5.95 | | 5.95 | | V |
| | | 22 | | | 1.2V | 1.2V | 1.2V | -20µA | " | | | | | | | " | 2Y | " | | " | | " | | " |
| | | 23 | | | | | | | " | -20µA | 1.2V | 1.2V | 1.2V | | | " | 3Y | " | | " | | " | | " |
| $V_{OH5}$ | 3006 | 24 | Same tests and terminal conditions as for $V_{OH3}$, except as noted on the following line. | | | | | | | | | | | | | | | | | | | | | |
| | | to | | | | | | -5.2mA | | -5.2mA | | | | -5.2mA | | | | 5.48 | | 5.2 | | 5.48 | | V |
| | | 26 | | | | | | | | | | | | | | | | | | | | | | |
| $V_{OL3}$ | 3007 | 27 | 4.2V | 1.2V | | | | | GND | | | | | 20µA | 1.2V | 6V | 1Y | | .05 | | .05 | | .05 | " |
| | | 28 | 1.2V | 4.2V | | | | | " | | | | | " | 1.2V | " | 1Y | | " | | " | | " | " |
| | | 29 | 1.2V | 1.2V | | | | | " | | | | | " | 4.2V | " | 1Y | | " | | " | | " | " |
| | | 30 | | | 4.2V | 1.2V | 1.2V | 20µA | " | | | | | | | " | 2Y | | " | | " | | " | " |
| | | 31 | | | 1.2V | 4.2V | 1.2V | " | " | | | | | | | " | 2Y | | " | | " | | " | " |
| | | 32 | | | 1.2V | 1.2V | 4.2V | " | " | | | | | | | " | 2Y | | " | | " | | " | " |
| | | 33 | | | | | | | " | 20µA | 4.2V | 1.2V | 1.2V | | | " | 3Y | | " | | " | | " | " |
| | | 34 | | | | | | | " | " | 1.2V | 4.2V | 1.2V | | | " | 3Y | | " | | " | | " | " |
| | | 35 | | | | | | | " | " | 1.2V | 1.2V | 4.2V | | | " | 3Y | | " | | " | | " | " |
| $V_{OL5}$ | 3007 | 36 | Same tests and terminal conditions as for $V_{OL3}$, except as noted on the following line. | | | | | | | | | | | | | | | | | | | | | |
| | | to | | | | | | +5.2mA | | +5.2mA | | | | +5.2mA | | | | | .26 | | .4 | | .26 | V |
| | | 44 | | | | | | | | | | | | | | | | | | | | | | |
| $I_{OS4}$ | 3011 | 45 | GND | GND | | | | | GND | | | | | GND | GND | 4V | 1Y | -10 | -120 | -10 | -120 | -10 | -120 | mA |
| | | 46 | | | GND | GND | GND | GND | " | | | | | | | " | 2Y | " | " | " | " | " | " | " |
| | | 47 | | | | | | | " | GND | GND | GND | GND | | | " | 3Y | " | " | " | " | " | " | " |

See footnotes at end of table.

TABLE III. Group A inspection for device type 02 – Continued.

| Symbol | MIL-STD-883 method | Case | Terminal conditions 1/ | | | | | | | | | | | | | | Measured terminal | Test limits | | | | | | Unit |
|---|---|---|---|---|---|---|---|---|---|---|---|---|---|---|---|---|---|---|---|---|---|---|---|---|
| | | 2 | 2 | 3 | 4 | 6 | 8 | 9 | 10 | 12 | 13 | 14 | 16 | 18 | 19 | 20 | | Subgroup 1 $T_C$ = +25°C | | Subgroup 2 $T_C$ = +125°C | | Subgroup 3 $T_C$ = -55°C | | |
| | | C,D | 1 | 2 | 3 | 4 | 5 | 6 | 7 | 8 | 9 | 10 | 11 | 12 | 13 | 14 | | | | | | | | |
| | | Test no. | 1A | 1B | 2A | 2B | 2C | 2Y | GND | 3Y | 3A | 3B | 3C | 1Y | 1C | $V_{CC}$ | | Min | Max | Min | Max | Min | Max | |
| $I_{IH}$ | 3010 | 48 | 6 V | GND | | | | | GND | | | | | | GND | 6 V | 1A | | .05 | | .1 | | | µA |
| | | 49 | GND | 6 V | | | | | " | | | | | | GND | " | 1B | | " | | " | | | " |
| | | 50 | GND | GND | | | | | " | | | | | | 6 V | " | 1C | | " | | " | | | " |
| | | 51 | | | 6 V | GND | GND | | " | | | | | | | " | 2A | | " | | " | | | " |
| | | 52 | | | GND | 6 V | GND | | " | | | | | | | " | 2B | | " | | " | | | " |
| | | 53 | | | GND | GND | 6 V | | " | | | | | | | " | 2C | | " | | " | | | " |
| | | 54 | | | | | | | " | | 6 V | GND | GND | | | " | 3A | | " | | " | | | " |
| | | 55 | | | | | | | " | | GND | 6 V | GND | | | " | 3B | | " | | " | | | " |
| | | 56 | | | | | | | " | | GND | GND | 6 V | | | " | 3C | | " | | " | | | " |
| $I_{IL}$ | 3009 | 57 | GND | 6 V | | | | | " | | | | | | 6 V | " | 1A | | -.05 | | -.1 | | | " |
| | | 58 | 6 V | GND | | | | | " | | | | | | 6 V | " | 1B | | " | | " | | | " |
| | | 59 | 6 V | 6 V | | | | | " | | | | | | GND | " | 1C | | " | | " | | | " |
| | | 60 | | | GND | 6 V | 6 V | | " | | | | | | | " | 2A | | " | | " | | | " |
| | | 61 | | | 6 V | GND | 6 V | | " | | | | | | | " | 2B | | " | | " | | | " |
| | | 62 | | | 6 V | 6 V | GND | | " | | | | | | | " | 2C | | " | | " | | | " |
| | | 63 | | | | | | | " | | GND | 6 V | 6 V | | | " | 3A | | " | | " | | | " |
| | | 64 | | | | | | | " | | 6 V | GND | 6 V | | | " | 3B | | " | | " | | | " |
| | | 65 | | | | | | | " | | 6 V | 6 V | GND | | | " | 3C | | " | | " | | | " |
| | | | | | | | | | | | | | | | | | | Subgroup 4 $T_C$ = +25°C | | | | | | |
| | | | | | | | | | | | | | | | | | | Min | Max | | | | | |
| $C_i$ | 3012 | 66 | 2/ | | | | | | GND | | | | | | | GND | 1A | | 10 | | | | | pF |
| | | 67 | | 2/ | | | | | " | | | | | | | " | 1B | | " | | | | | " |
| | | 68 | | | | | | | " | | | | | | 2/ | " | 1C | | " | | | | | " |
| | | 69 | | | 2/ | | | | " | | | | | | | " | 2A | | " | | | | | " |
| | | 70 | | | | 2/ | | | " | | | | | | | " | 2B | | " | | | | | " |
| | | 71 | | | | | 2/ | | " | | | | | | | " | 2C | | " | | | | | " |
| | | 72 | | | | | | | " | | 2/ | | | | | " | 3A | | " | | | | | " |
| | | 73 | | | | | | | " | | | 2/ | | | | " | 3B | | " | | | | | " |
| | | 74 | | | | | | | " | | | | 2/ | | | " | 3C | | " | | | | | " |
| | | | | | | | | | | | | | | | | | | 3/ Subgroup 9 $T_C$ = +25°C | | Subgroup 10 $T_C$ = +125°C | | 3/ Subgroup 11 $T_C$ = -55°C | | |
| | | | | | | | | | | | | | | | | | | Min | Max | Min | Max | Min | Max | |
| $t_{PHL}$ | 3003 (Fig. 3) | 75 | IN | GND | | | | | GND | | | | | OUT | GND | 4.5V | 1A to 1Y | 3 | 17 | 3 | 22 | 3 | 17 | ns |
| | | 76 | GND | IN | | | | | " | | | | | " | GND | " | 1B to 1Y | " | " | " | " | " | " | " |
| | | 77 | GND | GND | | | | | " | | | | | " | IN | " | 1C to 1Y | " | " | " | " | " | " | " |
| | | 78 | | | IN | GND | GND | OUT | " | | | | | | | " | 2A to 2Y | " | " | " | " | " | " | " |
| | | 79 | | | GND | IN | GND | " | " | | | | | | | " | 2B to 2Y | " | " | " | " | " | " | " |
| | | 80 | | | GND | GND | IN | " | " | | | | | | | " | 2C to 2Y | " | " | " | " | " | " | " |
| | | 81 | | | | | | | " | OUT | IN | GND | GND | | | " | 3A to 3Y | " | " | " | " | " | " | " |
| | | 82 | | | | | | | " | " | GND | IN | GND | | | " | 3B to 3Y | " | " | " | " | " | " | " |
| | | 83 | | | | | | | " | " | GND | GND | IN | | | " | 3C to 3Y | " | " | " | " | " | " | " |

See footnotes at end of table.

TABLE III. Group A inspection for device type 02 – Continued.

| Symbol | MIL-STD-883 method | Case | Terminal conditions 1/ | | | | | | | | | | | | | | Measured terminal | Test limits | | | | | | Unit |
|---|---|---|---|---|---|---|---|---|---|---|---|---|---|---|---|---|---|---|---|---|---|---|---|---|
| | | 2 | 2 | 3 | 4 | 6 | 8 | 9 | 10 | 12 | 13 | 14 | 16 | 18 | 19 | 20 | | 3/ Subgroup 9 $T_C$ = +25°C | | Subgroup 10 $T_C$ = +125°C | | 3/ Subgroup 11 $T_C$ = -55°C | | |
| | | C,D | 1 | 2 | 3 | 4 | 5 | 6 | 7 | 8 | 9 | 10 | 11 | 12 | 13 | 14 | | | | | | | | |
| | | Test no. | 1A | 1B | 2A | 2B | 2C | 2Y | GND | 3Y | 3A | 3B | 3C | 1Y | 1C | $V_{CC}$ | | Min | Max | Min | Max | Min | Max | |
| $t_{PLH}$ | 3003 (Fig. 3) | 84 to 92 | Same terminal conditions and limits as specified above for $t_{PHL}$. | | | | | | | | | | | | | | | | | | | | | |
| $t_{THL}$ | 3004 (Fig. 3) | 93 | IN | GND | IN | GND | GND | OUT | GND | | | | | OUT | GND | 4.5V | 1Y | 3 | 15 | 3 | 20 | 3 | 15 | ns |
| | | 94 | | | | | | | " | | | | | | | " | 2Y | " | " | " | " | " | " | " |
| | | 95 | | | | | | | " | OUT | IN | GND | GND | | | " | 3Y | " | " | " | " | " | " | " |
| $t_{TLH}$ | 3004 (Fig. 3) | 96 to 98 | Same terminal conditions and limits as specified above for $t_{THL}$. | | | | | | | | | | | | | | | | | | | | | |

See footnotes at end of table.

TABLE III. Group A inspection for device type 03.

| Symbol | MIL-STD-883 method | Case | Terminal conditions 1/ | | | | | | | | | | | | | | Measured terminal | Test limits | | | | | | Unit |
|---|---|---|---|---|---|---|---|---|---|---|---|---|---|---|---|---|---|---|---|---|---|---|---|---|
| | | 2 | 2 | 3 | 4 | 6 | 8 | 9 | 10 | 12 | 13 | 14 | 16 | 18 | 19 | 20 | | Subgroup 1 | | Subgroup 2 | | Subgroup 3 | | |
| | | C,D | 1 | 2 | 3 | 4 | 5 | 6 | 7 | 8 | 9 | 10 | 11 | 12 | 13 | 14 | | $T_C$ = +25°C | | $T_C$ = +125°C | | $T_C$ = -55°C | | |
| | | Test no. | 1A | 1B | 1Y | 2Y | 2A | 2B | GND | 3A | 3B | 3Y | 4Y | 4A | 4B | $V_{CC}$ | | Min | Max | Min | Max | Min | Max | |
| $V_{IC}$ (pos) 1/ | | 1 | 1mA | | | | | | 1/ | | | | | | | GND | 1A | 1/ | 1.5 | | | | | V |
| | | 2 | | 1mA | | | | | " | | | | | | | " | 1B | " | " | | | | | " |
| | | 3 | | | | | 1mA | | " | | | | | | | " | 2A | " | " | | | | | " |
| | | 4 | | | | | | 1mA | " | | | | | | | " | 2B | " | " | | | | | " |
| | | 5 | | | | | | | " | 1mA | | | | | | " | 3A | " | " | | | | | " |
| | | 6 | | | | | | | " | | 1mA | | | | | " | 3B | " | " | | | | | " |
| | | 7 | | | | | | | " | | | | | 1mA | | " | 4A | " | " | | | | | " |
| | | 8 | | | | | | | " | | | | | | 1mA | " | 4B | " | " | | | | | " |
| $V_{IC}$ (neg) 1/ | | 9 | -1mA | | | | | | GND | | | | | | | 1/ | 1A | | -1.5 | | | | | " |
| | | 10 | | -1mA | | | | | " | | | | | | | " | 1B | | " | | | | | " |
| | | 11 | | | | | -1mA | | " | | | | | | | " | 2A | | " | | | | | " |
| | | 12 | | | | | | -1mA | " | | | | | | | " | 2B | | " | | | | | " |
| | | 13 | | | | | | | " | -1mA | | | | | | " | 3A | | " | | | | | " |
| | | 14 | | | | | | | " | | -1mA | | | | | " | 3B | | " | | | | | " |
| | | 15 | | | | | | | " | | | | | -1mA | | " | 4A | | " | | | | | " |
| | | 16 | | | | | | | " | | | | | | -1mA | " | 4B | | " | | | | | " |
| $I_{CC}$ | 3005 | 17 | 6 V | 6 V | | | 6 V | 6 V | " | 6 V | 6 V | | | 6 V | 6 V | 6 V | $V_{CC}$ | | 0.1 | | 10 | | | µA |
| | | 18 | GND | 6 V | | | GND | 6 V | " | GND | 6 V | | | GND | 6 V | 6 V | $V_{CC}$ | | 0.1 | | 10 | | | µA |
| $I_{OH}$ | | 19 | 1.2V | 1.2V | 6V | | | | " | | | | | | | 6V | 1Y | | 0.5 | | 10 | | 0.5 | " |
| | | 20 | 4.2V | 4.2V | 6V | | | | " | | | | | | | " | 1Y | | " | | " | | " | " |
| | | 21 | | | | 6V | 1.2V | 1.2V | " | | | | | | | " | 2Y | | " | | " | | " | " |
| | | 22 | | | | 6V | 4.2V | 4.2V | " | | | | | | | " | 2Y | | " | | " | | " | " |
| | | 23 | | | | | | | " | 1.2V | 1.2V | 6V | | | | " | 3Y | | " | | " | | " | " |
| | | 24 | | | | | | | " | 4.2V | 4.2V | 6V | | | | " | 3Y | | " | | " | | " | " |
| | | 25 | | | | | | | " | | | | 6V | 1.2V | 1.2V | " | 4Y | | " | | " | | " | " |
| | | 26 | | | | | | | " | | | | 6V | 4.2V | 4.2V | " | 4Y | | " | | " | | " | " |
| $V_{OL3}$ | 3007 | 27 | 4.2V | 1.2V | 20µA | | | | " | | | | | | | " | 1Y | | .05 | | .05 | | .05 | V |
| | | 28 | 1.2V | 4.2V | 20µA | | | | " | | | | | | | " | 1Y | | " | | " | | " | " |
| | | 29 | | | | 20µA | 4.2V | 1.2V | " | | | | | | | " | 2Y | | " | | " | | " | " |
| | | 30 | | | | 20µA | 1.2V | 4.2V | " | | | | | | | " | 2Y | | " | | " | | " | " |
| | | 31 | | | | | | | " | 4.2V | 1.2V | 20µA | | | | " | 3Y | | " | | " | | " | " |
| | | 32 | | | | | | | " | 1.2V | 4.2V | 20µA | | | | " | 3Y | | " | | " | | " | " |
| | | 33 | | | | | | | " | | | | 20µA | 4.2V | 1.2V | " | 4Y | | " | | " | | " | " |
| | | 34 | | | | | | | " | | | | 20µA | 1.2V | 4.2V | " | 4Y | | " | | " | | " | " |
| $V_{OL5}$ | 3007 | 35 | Same tests and terminal conditions as for $V_{OL3}$, except as noted on the following line. | | | | | | | | | | | | | | | | | | | | | |
| | | to | | | 5.2mA | 5.2mA | | | | | | 5.2mA | 5.2mA | | | | | | .26 | | .4 | | .26 | V |
| | | 42 | | | | | | | | | | | | | | | | | | | | | | |
| $I_{IH}$ | 3010 | 43 | 6V | GND | | | | | GND | | | | | | | 6V | 1A | | .05 | | .1 | | | µA |
| | | 44 | GND | 6V | | | | | " | | | | | | | " | 1B | | " | | " | | | " |
| | | 45 | | | | | 6V | GND | " | | | | | | | " | 2A | | " | | " | | | " |
| | | 46 | | | | | GND | 6V | " | | | | | | | " | 2B | | " | | " | | | " |
| | | 47 | | | | | | | " | 6V | GND | | | | | " | 3A | | " | | " | | | " |
| | | 48 | | | | | | | " | GND | 6V | | | | | " | 3B | | " | | " | | | " |
| | | 49 | | | | | | | " | | | | | 6V | GND | " | 4A | | " | | " | | | " |
| | | 50 | | | | | | | " | | | | | GND | 6V | " | 4B | | " | | " | | | " |

See footnotes at end of table.

TABLE III. Group A inspection for device type 03 – Continued.

| Symbol | MIL-STD-883 method | Case | Terminal conditions 1/ | | | | | | | | | | | | | | Measured terminal | Test limits | | | | | | Unit |
|---|---|---|---|---|---|---|---|---|---|---|---|---|---|---|---|---|---|---|---|---|---|---|---|---|
| | | 2 | 2 | 3 | 4 | 6 | 8 | 9 | 10 | 12 | 13 | 14 | 16 | 18 | 19 | 20 | | Subgroup 1 $T_C$ = +25°C | | Subgroup 2 $T_C$ = +125°C | | Subgroup 3 $T_C$ = -55°C | | |
| | | C,D | 1 | 2 | 3 | 4 | 5 | 6 | 7 | 8 | 9 | 10 | 11 | 12 | 13 | 14 | | | | | | | | |
| | | Test no. | 1A | 1B | 1Y | 2Y | 2A | 2B | GND | 3A | 3B | 3Y | 4Y | 4A | 4B | $V_{CC}$ | | Min | Max | Min | Max | Min | Max | |
| $I_{IL}$ | 3009 | 51 | GND | 6V | | | | | GND | | | | | | | 6V | 1A | | -.05 | | -.1 | | | µA |
| | | 52 | 6V | GND | | | | | " | | | | | | | " | 1B | | " | | " | | | " |
| | | 53 | | | | | GND | 6V | " | | | | | | | " | 2A | | " | | " | | | " |
| | | 54 | | | | | 6V | GND | " | | | | | | | " | 2B | | " | | " | | | " |
| | | 55 | | | | | | | " | GND | 6V | | | | | " | 3A | | " | | " | | | " |
| | | 56 | | | | | | | " | 6V | GND | | | | | " | 3B | | " | | " | | | " |
| | | 57 | | | | | | | " | | | | | GND | 6V | " | 4A | | " | | " | | | " |
| | | 58 | | | | | | | " | | | | | 6V | GND | " | 4B | | " | | " | | | " |
| | | | | | | | | | | | | | | | | | | Subgroup 4 $T_C$ = +25°C | | | | | | |
| | | | | | | | | | | | | | | | | | | Min | Max | | | | | |
| Ci | 3012 | 59 | 2/ | | | | | | GND | | | | | | | GND | 1A | | 10 | | | | | pF |
| | | 60 | | 2/ | | | | | " | | | | | | | " | 1B | | " | | | | | " |
| | | 61 | | | | | 2/ | | " | | | | | | | " | 2A | | " | | | | | " |
| | | 62 | | | | | | 2/ | " | | | | | | | " | 2B | | " | | | | | " |
| | | 63 | | | | | | | " | 2/ | | | | | | " | 3A | | " | | | | | " |
| | | 64 | | | | | | | " | | 2/ | | | | | " | 3B | | " | | | | | " |
| | | 65 | | | | | | | " | | | | | 2/ | | " | 4A | | " | | | | | " |
| | | 66 | | | | | | | " | | | | | | 2/ | " | 4B | | " | | | | | " |
| | | | | | | | | | | | | | | | | | | 3/ Subgroup 9 $T_C$ = +25°C | | Subgroup 10 $T_C$ = +125°C | | 3/ Subgroup 11 $T_C$ = -55°C | | |
| | | | | | | | | | | | | | | | | | | Min | Max | Min | Max | Min | Max | |
| $t_{PHL1}$ | 3003 (Fig. 3) | 67 | IN | GND | OUT | | | | GND | | | | | | | 4.5V | 1A to 1Y | 3 | 22 | 3 | 29 | 3 | 22 | ns |
| | | 68 | GND | IN | OUT | | | | " | | | | | | | " | 1B to 1Y | " | " | " | " | " | " | " |
| | | 69 | | | | OUT | IN | GND | " | | | | | | | " | 2A to 2Y | " | " | " | " | " | " | " |
| | | 70 | | | | OUT | GND | IN | " | | | | | | | " | 2B to 2Y | " | " | " | " | " | " | " |
| | | 71 | | | | | | | " | IN | GND | OUT | | | | " | 3A to 3Y | " | " | " | " | " | " | " |
| | | 72 | | | | | | | " | GND | IN | OUT | | | | " | 3B to 3Y | " | " | " | " | " | " | " |
| | | 73 | | | | | | | " | | | | OUT | IN | GND | " | 4A to 4Y | " | " | " | " | " | " | " |
| | | 74 | | | | | | | " | | | | OUT | GND | IN | " | 4B to 4Y | " | " | " | " | " | " | " |
| $t_{PLH3}$ | 3003 (Fig. 3) | 75 to 82 | Same terminal conditions as specified above for $t_{PHL1}$. | | | | | | | | | | | | | | | " | 15 | " | 20 | " | 15 | " |
| $t_{PHL2}$ | 3003 (Fig. 3) | 83 | IN | 4.5V | OUT | | | | GND | | | | | | | 4.5V | 1A to 1Y | " | 22 | " | 29 | " | 22 | " |
| | | 84 | 4.5V | IN | OUT | | | | " | | | | | | | " | 1B to 1Y | " | " | " | " | " | " | " |
| | | 85 | | | | OUT | IN | 4.5V | " | | | | | | | " | 2A to 2Y | " | " | " | " | " | " | " |
| | | 86 | | | | OUT | 4.5V | IN | " | | | | | | | " | 2B to 2Y | " | " | " | " | " | " | " |
| | | 87 | | | | | | | " | IN | 4.5V | OUT | | | | " | 3A to 3Y | " | " | " | " | " | " | " |
| | | 88 | | | | | | | " | 4.5V | IN | OUT | | | | " | 3B to 3Y | " | " | " | " | " | " | " |
| | | 89 | | | | | | | " | | | | OUT | IN | 4.5V | " | 4A to 4Y | " | " | " | " | " | " | " |
| | | 90 | | | | | | | " | | | | OUT | 4.5V | IN | " | 4B to 4Y | " | " | " | " | " | " | " |
| $t_{PLH4}$ | 3003 (Fig. 3) | 91 to 98 | Same terminal conditions as specified above for $t_{PHL2}$. | | | | | | | | | | | | | | | " | 15 | " | 20 | " | 15 | " |

See footnotes at end of table.

TABLE III. Group A inspection for device type 03 – Continued.

| Symbol | MIL-STD-883 method | Case | Terminal conditions 1/ | | | | | | | | | | | | | | Measured terminal | Test limits | | | | | | Unit |
|---|---|---|---|---|---|---|---|---|---|---|---|---|---|---|---|---|---|---|---|---|---|---|---|---|
| | | 2 | 2 | 3 | 4 | 6 | 8 | 9 | 10 | 12 | 13 | 14 | 16 | 18 | 19 | 20 | | 3/ Subgroup 9 $T_C$ = +25°C | | Subgroup 10 $T_C$ = +125°C | | 3/ Subgroup 11 $T_C$ = -55°C | | |
| | | C,D | 1 | 2 | 3 | 4 | 5 | 6 | 7 | 8 | 9 | 10 | 11 | 12 | 13 | 14 | | | | | | | | |
| | | Test no. | 1A | 1B | 1Y | 2Y | 2A | 2B | GND | 3A | 3B | 3Y | 4Y | 4A | 4B | $V_{CC}$ | | Min | Max | Min | Max | Min | Max | |
| $t_{THL}$ | 3004 (Fig. 3) | 99 | IN | GND | OUT | | | | GND | | | | | | | 4.5V | 1Y | 3 | 15 | 3 | 20 | 3 | 15 | ns |
| | | 100 | GND | IN | OUT | | | | " | | | | | | | " | 1Y | " | " | " | " | " | " | " |
| | | 101 | | | | OUT | IN | GND | " | | | | | | | " | 2Y | " | " | " | " | " | " | " |
| | | 102 | | | | OUT | GND | IN | " | | | | | | | " | 2Y | " | " | " | " | " | " | " |
| | | 103 | | | | | | | " | IN | GND | OUT | | | | " | 3Y | " | " | " | " | " | " | " |
| | | 104 | | | | | | | " | GND | IN | OUT | | | | " | 3Y | " | " | " | " | " | " | " |
| | | 105 | | | | | | | " | | | | OUT | IN | GND | " | 4Y | " | " | " | " | " | " | " |
| | | 106 | | | | | | | " | | | | OUT | GND | IN | " | 4Y | " | " | " | " | " | " | " |

See footnotes at end of table.

TABLE III. Group A inspection for device type 04.

| Symbol | MIL-STD-883 method | Case | Terminal conditions 1/ | | | | | | | | | | | | | | Measured terminal | Test limits | | | | | | Unit |
|---|---|---|---|---|---|---|---|---|---|---|---|---|---|---|---|---|---|---|---|---|---|---|---|---|
| | | 2 | 2 | 3 | 4 | 6 | 8 | 9 | 10 | 12 | 13 | 14 | 16 | 18 | 19 | 20 | | Subgroup 1 | | Subgroup 2 | | Subgroup 3 | | |
| | | C,D | 1 | 2 | 3 | 4 | 5 | 6 | 7 | 8 | 9 | 10 | 11 | 12 | 13 | 14 | | $T_C$ = +25°C | | $T_C$ = +125°C | | $T_C$ = -55°C | | |
| | | Test no. | 1Y | 1A | 1B | 1C | 1D | NC | GND | NC | 2A | 2B | 2C | 2D | 2Y | $V_{CC}$ | | Min | Max | Min | Max | Min | Max | |
| $V_{IC}$ (pos) 1/ | | 1 | | 1mA | | | | | 1/ | | | | | | | GND | 1A | 1/ | 1.5 | | | | | V |
| | | 2 | | | 1mA | | | | " | | | | | | | " | 1B | " | " | | | | | " |
| | | 3 | | | | 1mA | | | " | | | | | | | " | 1C | " | " | | | | | " |
| | | 4 | | | | | 1mA | | " | | | | | | | " | 1D | " | " | | | | | " |
| | | 5 | | | | | | | " | | 1mA | | | | | " | 2A | " | " | | | | | " |
| | | 6 | | | | | | | " | | | 1mA | | | | " | 2B | " | " | | | | | " |
| | | 7 | | | | | | | " | | | | 1mA | | | " | 2C | " | " | | | | | " |
| | | 8 | | | | | | | " | | | | | 1mA | | " | 2D | " | " | | | | | " |
| $V_{IC}$ (neg) 1/ | | 9 | | -1mA | | | | | GND | | | | | | | 1/ | 1A | | -1.5 | | | | | " |
| | | 10 | | | -1mA | | | | " | | | | | | | " | 1B | | " | | | | | " |
| | | 11 | | | | -1mA | | | " | | | | | | | " | 1C | | " | | | | | " |
| | | 12 | | | | | -1mA | | " | | | | | | | " | 1D | | " | | | | | " |
| | | 13 | | | | | | | " | | -1mA | | | | | " | 2A | | " | | | | | " |
| | | 14 | | | | | | | " | | | -1mA | | | | " | 2B | | " | | | | | " |
| | | 15 | | | | | | | " | | | | -1mA | | | " | 2C | | " | | | | | " |
| | | 16 | | | | | | | " | | | | | -1mA | | " | 2D | | " | | | | | " |
| $I_{CC}$ | 3005 | 17 | | 6V | 6V | 6V | 6V | | " | | 6V | 6V | 6V | 6V | | 6V | $V_{CC}$ | | 0.1 | | 10 | | | µA |
| | | 18 | | GND | GND | GND | GND | | " | | GND | GND | GND | GND | | 6V | $V_{CC}$ | | 0.1 | | 10 | | | µA |
| $V_{OH3}$ | 3006 | 19 | -20µA | 1.2V | 1.2V | 1.2V | 1.2V | | " | | | | | | | " | 1Y | 5.95 | | 5.95 | | 5.95 | | V |
| | | 20 | | | | | | | " | | 1.2V | 1.2V | 1.2V | 1.2V | -20µA | " | 2Y | 5.95 | | 5.95 | | 5.95 | | V |
| $V_{OH5}$ | 3006 | 21 | Same tests and terminal conditions as for $V_{OH3}$, except as noted on the following line. | | | | | | | | | | | | | | | | | | | | | |
| | | and 22 | -5.2mA | | | | | | | | | | | | -5.2mA | | | 5.48 | | 5.2 | | 5.48 | | V |
| $V_{OL3}$ | 3007 | 23 | 20µA | 4.2V | 1.2V | 1.2V | 1.2V | | GND | | | | | | | 6V | 1Y | | .05 | | .05 | | .05 | V |
| | | 24 | " | 1.2V | 4.2V | 1.2V | " | | " | | | | | | | " | 1Y | | " | | " | | " | " |
| | | 25 | " | " | 1.2V | 4.2V | " | | " | | | | | | | " | 1Y | | " | | " | | " | " |
| | | 26 | " | " | 1.2V | 1.2V | 4.2V | | " | | | | | | | " | 1Y | | " | | " | | " | " |
| | | 27 | | | | | | | " | | 1.2V | 1.2V | 1.2V | 4.2V | 20µA | " | 2Y | | " | | " | | " | " |
| | | 28 | | | | | | | " | | " | 1.2V | 4.2V | 1.2V | " | " | 2Y | | " | | " | | " | " |
| | | 29 | | | | | | | " | | " | 4.2V | 1.2V | " | " | " | 2Y | | " | | " | | " | " |
| | | 30 | | | | | | | " | | 4.2V | 1.2V | 1.2V | " | " | " | 2Y | | " | | " | | " | " |
| $V_{OL5}$ | 3007 | 31 | Same tests and terminal conditions as for $V_{OL3}$, except as noted on the following line. | | | | | | | | | | | | | | | | | | | | | |
| | | to 38 | 5.2mA | | | | | | | | | | | | 5.2mA | | | | .26 | | .4 | | .26 | V |
| $I_{OS4}$ | 3011 | 39 | GND | GND | GND | GND | GND | | GND | | | | | | | 4V | 1Y | -10 | -120 | -10 | -120 | -10 | -120 | mA |
| | | 40 | | | | | | | GND | | GND | GND | GND | GND | GND | 4V | 2Y | -10 | -120 | -10 | -120 | -10 | -120 | mA |

See footnotes at end of table.

TABLE III. Group A inspection for device type 04 – Continued.

| Symbol | MIL-STD-883 method | Case | Terminal conditions 1/ | | | | | | | | | | | | | | Measured terminal | Test limits | | | | | | Unit |
|---|---|---|---|---|---|---|---|---|---|---|---|---|---|---|---|---|---|---|---|---|---|---|---|---|
| | | 2 | 2 | 3 | 4 | 6 | 8 | 9 | 10 | 12 | 13 | 14 | 16 | 18 | 19 | 20 | | Subgroup 1 $T_C$ = +25°C | | Subgroup 2 $T_C$ = +125°C | | Subgroup 3 $T_C$ = -55°C | | |
| | | C,D | 1 | 2 | 3 | 4 | 5 | 6 | 7 | 8 | 9 | 10 | 11 | 12 | 13 | 14 | | | | | | | | |
| | | Test no. | 1Y | 1A | 1B | 1C | 1D | NC | GND | NC | 2A | 2B | 2C | 2D | 2Y | $V_{CC}$ | | Min | Max | Min | Max | Min | Max | |
| $I_{IH}$ | 3010 | 41 | | 6V | GND | GND | GND | | GND | | | | | | | 6V | 1A | | .05 | | .1 | | | µA |
| | | 42 | | GND | 6V | GND | " | | " | | | | | | | " | 1B | | " | | " | | | " |
| | | 43 | | " | GND | 6V | " | | " | | | | | | | " | 1C | | " | | " | | | " |
| | | 44 | | " | GND | GND | 6V | | " | | | | | | | " | 1D | | " | | " | | | " |
| | | 45 | | | | | | | " | | 6V | GND | GND | GND | | " | 2A | | " | | " | | | " |
| | | 46 | | | | | | | " | | GND | 6V | GND | GND | | " | 2B | | " | | " | | | " |
| | | 47 | | | | | | | " | | GND | GND | 6V | GND | | " | 2C | | " | | " | | | " |
| | | 48 | | | | | | | " | | GND | GND | GND | 6V | | " | 2D | | " | | " | | | " |
| $I_{IL}$ | 3009 | 49 | | GND | 6V | 6V | 6V | | GND | | | | | | | 6V | 1A | | -.05 | | -.1 | | | " |
| | | 50 | | 6V | GND | 6V | " | | " | | | | | | | " | 1B | | " | | " | | | " |
| | | 51 | | " | 6V | GND | " | | " | | | | | | | " | 1C | | " | | " | | | " |
| | | 52 | | " | 6V | 6V | GND | | " | | | | | | | " | 1D | | " | | " | | | " |
| | | 53 | | | | | | | " | | GND | 6V | 6V | 6V | | " | 2A | | " | | " | | | " |
| | | 54 | | | | | | | " | | 6V | GND | 6V | 6V | | " | 2B | | " | | " | | | " |
| | | 55 | | | | | | | " | | " | 6V | GND | 6V | | " | 2C | | " | | " | | | " |
| | | 56 | | | | | | | " | | " | 6V | 6V | GND | | " | 2D | | " | | " | | | " |
| | | | | | | | | | | | | | | | | | | Subgroup 4 $T_C$ = +25°C | | | | | | |
| | | | | | | | | | | | | | | | | | | Min | Max | | | | | |
| $C_i$ | 3012 | 57 | | 2/ | | | | | GND | | | | | | | GND | 1A | | 10 | | | | | pF |
| | | 58 | | | 2/ | | | | " | | | | | | | " | 1B | | " | | | | | " |
| | | 59 | | | | 2/ | | | " | | | | | | | " | 1C | | " | | | | | " |
| | | 60 | | | | | 2/ | | " | | | | | | | " | 1D | | " | | | | | " |
| | | 61 | | | | | | | " | | 2/ | | | | | " | 2A | | " | | | | | " |
| | | 62 | | | | | | | " | | | 2/ | | | | " | 2B | | " | | | | | " |
| | | 63 | | | | | | | " | | | | 2/ | | | " | 2C | | " | | | | | " |
| | | 64 | | | | | | | " | | | | | 2/ | | " | 2D | | " | | | | | " |
| | | | | | | | | | | | | | | | | | | 3/ Subgroup 9 $T_C$ = +25°C | | Subgroup 10 $T_C$ = +125°C | | 3/ Subgroup 11 $T_C$ = -55°C | | |
| | | | | | | | | | | | | | | | | | | Min | Max | Min | Max | Min | Max | |
| $t_{PHL}$ | 3003 (Fig. 3) | 65 | OUT | IN | GND | GND | GND | | GND | | | | | | | 4.5V | 1A to 1Y | 3 | 21 | 3 | 28 | 3 | 21 | ns |
| | | 66 | " | GND | IN | GND | " | | " | | | | | | | " | 1B to 1Y | " | " | " | " | " | " | " |
| | | 67 | " | " | GND | IN | " | | " | | | | | | | " | 1C to 1Y | " | " | " | " | " | " | " |
| | | 68 | " | " | GND | GND | IN | | " | | | | | | | " | 1D to 1Y | " | " | " | " | " | " | " |
| | | 69 | | | | | | | " | | IN | GND | GND | GND | OUT | " | 2A to 2Y | " | " | " | " | " | " | " |
| | | 70 | | | | | | | " | | GND | IN | GND | GND | " | " | 2B to 2Y | " | " | " | " | " | " | " |
| | | 71 | | | | | | | " | | GND | GND | IN | GND | " | " | 2C to 2Y | " | " | " | " | " | " | " |
| | | 72 | | | | | | | " | | GND | GND | GND | IN | " | " | 2D to 2Y | " | " | " | " | " | " | " |
| $t_{PLH}$ | 3003 (Fig. 3) | 73 to 80 | Same terminal conditions and limits as specified above for $t_{PHL}$. | | | | | | | | | | | | | | | | | | | | | |
| $t_{THL}$ | 3004 (Fig. 3) | 81 | OUT | IN | GND | GND | GND | | GND | | | | | | | 4.5V | 1Y | 3 | 15 | 3 | 20 | 3 | 15 | ns |
| | | 82 | | | | | | | GND | | IN | GND | GND | GND | OUT | 4.5V | 2Y | 3 | 15 | 3 | 20 | 3 | 15 | ns |
| $t_{TLH}$ | 3004 (Fig. 3) | 83 and 84 | Same terminal conditions and limits as specified above for $t_{THL}$. | | | | | | | | | | | | | | | | | | | | | |

See footnotes at end of table.

TABLE III. Group A inspection for device type 05.

| Symbol | MIL-STD-883 method | Case | Terminal conditions 1/ | | | | | | | | | | | | | | Measured terminal | Test limits | | | | | | Unit |
|---|---|---|---|---|---|---|---|---|---|---|---|---|---|---|---|---|---|---|---|---|---|---|---|---|
| | | 2 | 2 | 3 | 4 | 6 | 8 | 9 | 10 | 12 | 13 | 14 | 16 | 18 | 19 | 20 | | Subgroup 1 $T_C$ = +25°C | | Subgroup 2 $T_C$ = +125°C | | Subgroup 3 $T_C$ = -55°C | | |
| | | C,D | 1 | 2 | 3 | 4 | 5 | 6 | 7 | 8 | 9 | 10 | 11 | 12 | 13 | 14 | | | | | | | | |
| | | Test no. | 1A | 1B | 1Y | 2Y | 2A | 2B | GND | 3A | 3B | 3Y | 4Y | 4A | 4B | $V_{CC}$ | | Min | Max | Min | Max | Min | Max | |
| $V_{IC}$ (pos) 1/ | | 1 | 1mA | | | | | | 1/ | | | | | | | GND | 1A | 1/ | 1.5 | | | | | V |
| | | 2 | | 1mA | | | | | " | | | | | | | " | 1B | " | " | | | | | " |
| | | 3 | | | | | 1mA | | " | | | | | | | " | 2A | " | " | | | | | " |
| | | 4 | | | | | | 1mA | " | | | | | | | " | 2B | " | " | | | | | " |
| | | 5 | | | | | | | " | 1mA | | | | | | " | 3A | " | " | | | | | " |
| | | 6 | | | | | | | " | | 1mA | | | | | " | 3B | " | " | | | | | " |
| | | 7 | | | | | | | " | | | | | 1mA | | " | 4A | " | " | | | | | " |
| | | 8 | | | | | | | " | | | | | | 1mA | " | 4B | " | " | | | | | " |
| $V_{IC}$ (neg) 1/ | | 9 | -1mA | | | | | | GND | | | | | | | 1/ | 1A | | -1.5 | | | | | " |
| | | 10 | | -1mA | | | | | " | | | | | | | " | 1B | | " | | | | | " |
| | | 11 | | | | | -1mA | | " | | | | | | | " | 2A | | " | | | | | " |
| | | 12 | | | | | | -1mA | " | | | | | | | " | 2B | | " | | | | | " |
| | | 13 | | | | | | | " | -1mA | | | | | | " | 3A | | " | | | | | " |
| | | 14 | | | | | | | " | | -1mA | | | | | " | 3B | | " | | | | | " |
| | | 15 | | | | | | | " | | | | | -1mA | | " | 4A | | " | | | | | " |
| | | 16 | | | | | | | " | | | | | | -1mA | " | 4B | | " | | | | | " |
| $I_{CC}$ | 3005 | 17 | 6V | 6V | | | 6V | 6V | " | 6V | 6V | | | 6V | 6V | 6V | $V_{CC}$ | | .1 | | 10 | | | µA |
| | | 18 | GND | 6V | | | GND | 6V | " | GND | 6V | | | GND | 6V | 6V | $V_{CC}$ | | .1 | | 10 | | | µA |
| $V_{OH3}$ | 3006 | 19 | 1.2V | 1.2V | -20µA | | | | " | | | | | | | " | 1Y | 5.95 | | 5.95 | | 5.95 | | V |
| | | 20 | | | | -20µA | 1.2V | 1.2V | " | | | | | | | " | 2Y | " | | " | | " | | " |
| | | 21 | | | | | | | " | 1.2V | 1.2V | -20µA | | | | " | 3Y | " | | " | | " | | " |
| | | 22 | | | | | | | " | | | | -20µA | 1.2V | 1.2V | " | 4Y | " | | " | | " | | " |
| $V_{OH5}$ | 3006 | 23 to 26 | Same tests and terminal conditions as for $V_{OH3}$, except as noted on the following line. | | | | | | | | | | | | | | | | | | | | | |
| | | | | | -5.2mA | -5.2mA | | | | | | -5.2mA | -5.2mA | | | | | 5.48 | | 5.2 | | 5.48 | | V |
| $V_{OL3}$ | 3007 | 27 | 4.2V | 1.2V | 20µA | | | | " | | | | | | | 6V | 1Y | | .05 | | .05 | | .05 | V |
| | | 28 | 1.2V | 4.2V | 20µA | | | | " | | | | | | | " | 1Y | | " | | " | | " | " |
| | | 29 | | | | 20µA | 4.2V | 1.2V | " | | | | | | | " | 2Y | | " | | " | | " | " |
| | | 30 | | | | 20µA | 1.2V | 4.2V | " | | | | | | | " | 2Y | | " | | " | | " | " |
| | | 31 | | | | | | | " | 4.2V | 1.2V | 20µA | | | | " | 3Y | | " | | " | | " | " |
| | | 32 | | | | | | | " | 1.2V | 4.2V | 20µA | | | | " | 3Y | | " | | " | | " | " |
| | | 33 | | | | | | | " | | | | 20µA | 4.2V | 1.2V | " | 4Y | | " | | " | | " | " |
| | | 34 | | | | | | | " | | | | 20µA | 1.2V | 4.2V | " | 4Y | | " | | " | | " | " |
| $V_{OL5}$ | 3007 | 35 to 42 | Same tests and terminal conditions as for $V_{OL3}$, except as noted on the following line. | | | | | | | | | | | | | | | | | | | | | |
| | | | | | 5.2mA | 5.2mA | | | | | | 5.2mA | 5.2mA | | | | | | .26 | | .4 | | .26 | V |
| $I_{OS4}$ | 3011 | 43 | GND | GND | GND | | | | GND | | | | | | | 4V | 1Y | -10 | -120 | -10 | -120 | -10 | -120 | mA |
| | | 44 | | | | GND | GND | GND | " | | | | | | | " | 2Y | " | " | " | " | " | " | " |
| | | 45 | | | | | | | " | GND | GND | GND | | | | " | 3Y | " | " | " | " | " | " | " |
| | | 46 | | | | | | | " | | | | GND | GND | GND | " | 4Y | " | " | " | " | " | " | " |

See footnotes at end of table.

TABLE III. Group A inspection for device type 05 – Continued.

| Symbol | MIL-STD-883 method | Case | Terminal conditions 1/ | | | | | | | | | | | | | | Measured terminal | Test limits | | | | | | Unit |
|---|---|---|---|---|---|---|---|---|---|---|---|---|---|---|---|---|---|---|---|---|---|---|---|---|
| | | 2 | 2 | 3 | 4 | 6 | 8 | 9 | 10 | 12 | 13 | 14 | 16 | 18 | 19 | 20 | | Subgroup 1 $T_C$ = +25°C | | Subgroup 2 $T_C$ = +125°C | | Subgroup 3 $T_C$ = -55°C | | |
| | | C,D | 1 | 2 | 3 | 4 | 5 | 6 | 7 | 8 | 9 | 10 | 11 | 12 | 13 | 14 | | | | | | | | |
| | | Test no. | 1A | 1B | 1Y | 2Y | 2A | 2B | GND | 3A | 3B | 3Y | 4Y | 4A | 4B | $V_{CC}$ | | Min | Max | Min | Max | Min | Max | |
| $I_{IH}$ | 3010 | 47 | 6V | GND | | | | | GND | | | | | | | 6V | 1A | | .05 | | .1 | | | µA |
| | | 48 | GND | 6V | | | | | " | | | | | | | " | 1B | | " | | " | | | " |
| | | 49 | | | | | 6V | GND | " | | | | | | | " | 2A | | " | | " | | | " |
| | | 50 | | | | | GND | 6V | " | | | | | | | " | 2B | | " | | " | | | " |
| | | 51 | | | | | | | " | 6V | GND | | | | | " | 3A | | " | | " | | | " |
| | | 52 | | | | | | | " | GND | 6V | | | | | " | 3B | | " | | " | | | " |
| | | 53 | | | | | | | " | | | | | 6V | GND | " | 4A | | " | | " | | | " |
| | | 54 | | | | | | | " | | | | | GND | 6V | " | 4B | | " | | " | | | " |
| $I_{IL}$ | 3009 | 55 | GND | 6V | | | | | " | | | | | | | " | 1A | | -.05 | | -.1 | | | " |
| | | 56 | 6V | GND | | | | | " | | | | | | | " | 1B | | " | | " | | | " |
| | | 57 | | | | | GND | 6V | " | | | | | | | " | 2A | | " | | " | | | " |
| | | 58 | | | | | 6V | GND | " | | | | | | | " | 2B | | " | | " | | | " |
| | | 59 | | | | | | | " | GND | 6V | | | | | " | 3A | | " | | " | | | " |
| | | 60 | | | | | | | " | 6V | GND | | | | | " | 3B | | " | | " | | | " |
| | | 61 | | | | | | | " | | | | | GND | 6V | " | 4A | | " | | " | | | " |
| | | 62 | | | | | | | " | | | | | 6V | GND | " | 4B | | " | | " | | | " |
| | | | | | | | | | | | | | | | | | | Subgroup 4 $T_C$ = +25°C | | | | | | |
| | | | | | | | | | | | | | | | | | | Min | Max | | | | | |
| $C_i$ | 3012 | 63 | 2/ | | | | | | GND | | | | | | | GND | 1A | | 10 | | | | | pF |
| | | 64 | | 2/ | | | | | " | | | | | | | " | 1B | | " | | | | | " |
| | | 65 | | | | | 2/ | | " | | | | | | | " | 2A | | " | | | | | " |
| | | 66 | | | | | | 2/ | " | | | | | | | " | 2B | | " | | | | | " |
| | | 67 | | | | | | | " | 2/ | | | | | | " | 3A | | " | | | | | " |
| | | 68 | | | | | | | " | | 2/ | | | | | " | 3B | | " | | | | | " |
| | | 69 | | | | | | | " | | | | | 2/ | | " | 4A | | " | | | | | " |
| | | 70 | | | | | | | " | | | | | | 2/ | " | 4B | | " | | | | | " |
| | | | | | | | | | | | | | | | | | | 3/ Subgroup 9 $T_C$ = +25°C | | Subgroup 10 $T_C$ = +125°C | | 3/ Subgroup 11 $T_C$ = -55°C | | |
| | | | | | | | | | | | | | | | | | | Min | Max | Min | Max | Min | Max | |
| $t_{PHL1}$ | 3003 (Fig. 3) | 71 | IN | GND | OUT | | | | GND | | | | | | | 4.5V | 1A to 1Y | 3 | 22 | 3 | 29 | 3 | 22 | ns |
| | | 72 | GND | IN | OUT | | | | " | | | | | | | " | 1B to 1Y | " | " | " | " | " | " | " |
| | | 73 | | | | OUT | IN | GND | " | | | | | | | " | 2A to 2Y | " | " | " | " | " | " | " |
| | | 74 | | | | OUT | GND | IN | " | | | | | | | " | 2B to 2Y | " | " | " | " | " | " | " |
| | | 75 | | | | | | | " | IN | GND | OUT | | | | " | 3A to 3Y | " | " | " | " | " | " | " |
| | | 76 | | | | | | | " | GND | IN | OUT | | | | " | 3B to 3Y | " | " | " | " | " | " | " |
| | | 77 | | | | | | | " | | | | OUT | IN | GND | " | 4A to 4Y | " | " | " | " | " | " | " |
| | | 78 | | | | | | | " | | | | OUT | GND | IN | " | 4B to 4Y | " | " | " | " | " | " | " |
| $t_{PLH1}$ | 3003 (Fig. 3) | 79 to 86 | Same terminal conditions and limits as specified above for $t_{PHL1}$. | | | | | | | | | | | | | | | | | | | | | |
| $t_{PHL2}$ | 3003 (Fig. 3) | 87 | IN | 4.5V | OUT | | | | GND | | | | | | | 4.5V | 1A to 1Y | 3 | 22 | 3 | 29 | 3 | 22 | ns |
| | | 88 | 4.5V | IN | OUT | | | | " | | | | | | | " | 1B to 1Y | " | " | " | " | " | " | " |
| | | 89 | | | | OUT | IN | 4.5V | " | | | | | | | " | 2A to 2Y | " | " | " | " | " | " | " |
| | | 90 | | | | OUT | 4.5V | IN | " | | | | | | | " | 2B to 2Y | " | " | " | " | " | " | " |
| | | 91 | | | | | | | " | IN | 4.5V | OUT | | | | " | 3A to 3Y | " | " | " | " | " | " | " |
| | | 92 | | | | | | | " | 4.5V | IN | OUT | | | | " | 3B to 3Y | " | " | " | " | " | " | " |
| | | 93 | | | | | | | " | | | | OUT | IN | 4.5V | " | 4A to 4Y | " | " | " | " | " | " | " |
| | | 94 | | | | | | | " | | | | OUT | 4.5V | IN | " | 4B to 4Y | " | " | " | " | " | " | " |
| $t_{PLH2}$ | 3003 (Fig. 3) | 95 to 102 | Same terminal conditions and limits as specified above for $t_{PHL2}$. | | | | | | | | | | | | | | | | | | | | | |

See footnotes at end of table.

TABLE III. Group A inspection for device type 05 – Continued.

| Symbol | MIL-STD-883 method | Case | Terminal conditions 1/ | | | | | | | | | | | | | | Measured terminal | Test limits | | | | | | Unit |
|---|---|---|---|---|---|---|---|---|---|---|---|---|---|---|---|---|---|---|---|---|---|---|---|---|
| | | 2 | 2 | 3 | 4 | 6 | 8 | 9 | 10 | 12 | 13 | 14 | 16 | 18 | 19 | 20 | | 3/ Subgroup 9 $T_C$ = +25°C | | Subgroup 10 $T_C$ = +125°C | | 3/ Subgroup 11 $T_C$ = -55°C | | |
| | | C,D | 1 | 2 | 3 | 4 | 5 | 6 | 7 | 8 | 9 | 10 | 11 | 12 | 13 | 14 | | | | | | | | |
| | | Test no. | 1A | 1B | 1Y | 2Y | 2A | 2B | GND | 3A | 3B | 3Y | 4Y | 4A | 4B | $V_{CC}$ | | Min | Max | Min | Max | Min | Max | |
| $t_{THL}$ | 3004 (Fig. 3) | 103 | IN | GND | OUT | | | | GND | | | | | | | 4.5V | 1Y | 3 | 15 | 3 | 20 | 3 | 15 | ns |
| | | 104 | GND | IN | OUT | | | | " | | | | | | | " | 1Y | " | " | " | " | " | " | " |
| | | 105 | | | | OUT | IN | GND | " | | | | | | | " | 2Y | " | " | " | " | " | " | " |
| | | 106 | | | | OUT | GND | IN | " | | | | | | | " | 2Y | " | " | " | " | " | " | " |
| | | 107 | | | | | | | " | IN | GND | OUT | | | | " | 3Y | " | " | " | " | " | " | " |
| | | 108 | | | | | | | " | GND | IN | OUT | | | | " | 3Y | " | " | " | " | " | " | " |
| | | 109 | | | | | | | " | | | | OUT | IN | GND | " | 4Y | " | " | " | " | " | " | " |
| | | 110 | | | | | | | " | | | | OUT | GND | IN | " | 4Y | " | " | " | " | " | " | " |
| $t_{TLH}$ | 3004 (Fig. 3) | 111 to 118 | Same terminal conditions and limits as specified above for $t_{THL}$. | | | | | | | | | | | | | | | | | | | | | |

1/ Input pins not designated shall be high level logic, low level logic, or may be left open provided they do not influence the outcome of the measurement. Output pins not designated shall be tied to the loads or left open provided they do not influence the outcome of the measurement. Exceptions are as follows:

a. $V_{IC}$(pos) tests: The GND terminal shall be open. A minimum limit of 0.4 V applies to test being performed on equipment not capable of opening GND pin during test.
b. $V_{IC}$(neg) tests: The $V_{CC}$ terminal shall be open.
c. $I_{CC}$ tests: The output terminal shall be open.

2/ See 4.4.1c. For all type input terminals (e.g., clock, clear, data, etc.), a minimum of 3 inputs of each per device shall be tested.

3/ See 4.4.1d.

4.5.2 Burn-in and life test cool down procedures. When the burn-in and life tests are completed and prior to removal of bias voltages, the devices under test (DUT) shall be cooled to within 10°C of their power stable condition at room temperature; then, electrical parameter end-point measurements shall be performed.

TABLE IV. Delta limits at 25°C.

| Parameter 1/ | Device types | |
|---|---|---|
| | All | |
| $I_{CC}$ | | ±30 nA |

1/ The above parameters shall be recorded before and after the required burn-in and life tests to determine deltas (Δ).

4.5.3 Quiescent supply current ($I_{CC}$ test). When performing quiescent supply current measurements ($I_{CC}$), the meter shall be placed so that all currents flow through the meter.

5. PACKAGING

5.1 Packaging requirements. For acquisition purposes, the packaging requirements shall be as specified in the contract or order (see 6.2). When actual packaging of materiel is to be performed by DoD or in-house contractor personnel, these personnel need to contact the responsible packaging activity to ascertain packaging requirements. Packaging requirements are maintained by the Inventory Control Point's packaging activity within the Military Service or Defense Agency, or within the military service's system commands. Packaging data retrieval is available from the managing Military Department's or Defense Agency's automated packaging files, CD-ROM products, or by contacting the responsible packaging activity.

6. NOTES

(This section contains information of a general or explanatory nature that may be helpful, but is not mandatory.)

6.1 Intended use. Microcircuits conforming to this specification are intended for original equipment design applications and logistic support of existing equipment.

6.2 Acquisition requirements. Acquisition documents should specify the following:

a. Title, number, and date of the specification.

b. PIN and compliance identifier, if applicable (see 1.2).

c. Requirements for delivery of one copy of the quality conformance inspection data pertinent to the device inspection lot to be supplied with each shipment by the device manufacturer, if applicable.

d. Requirements for certificate of compliance, if applicable.

e. Requirements for notification of change of product or process to contracting activity in addition to notification to the qualifying activity, if applicable.

f. Requirements for failure analysis (including required test condition of method 5003 of MIL-STD-883), corrective action, and reporting of results, if applicable.

g. Requirements for product assurance options.

h. Requirements for special carriers, lead lengths, or lead forming, if applicable. These requirements should not affect the part number. Unless otherwise specified, these requirements will not apply to direct purchase by or direct shipment to the Government.

i. Requirements for "JAN" marking.

j. Packaging requirements (see 5.1).

6.3 Superseding information. The requirements of MIL-M-38510 have been superseded to take advantage of the available Qualified Manufacturer Listing (QML) system provided by MIL-PRF-38535. Previous references to MIL-M-38510 in this document have been replaced by appropriate references to MIL-PRF-38535. All technical requirements now consist of this specification and MIL-PRF-38535. The MIL-M-38510 specification sheet number and PIN have been retained to avoid adversely impacting existing government logistics systems and contractors parts lists.

6.4 Qualification. With respect to products requiring qualification, awards will be made only for products which are, at the time of award of contract, qualified for inclusion in Qualified Manufacturers List QML-38535 whether or not such products have actually been so listed by that date. The attention of the contractors is called to these requirements, and manufacturers are urged to arrange to have the products that they propose to offer to the Federal Government tested for qualification in order that they may be eligible to be awarded contracts or purchase orders for the products covered by this specification. Information pertaining to qualification of products may be obtained from DSCC-VQ, P.O. Box 3990, Columbus, Ohio 43218-3990.

6.5 Abbreviations, symbols, and definitions. The abbreviations, symbols, and definitions used herein are defined in MIL-PRF-38535, MIL-HDBK-1331, and as follows:

$C_{IN}$ ..... Input terminal-to-GND capacitance.
$C_{PD}$ ..... Power dissipation capacitance.
GND ..... Ground zero voltage potential
$I_{CC}$ ..... Quiescent supply current.
$T_A$ ..... Ambient (free air) temperature.
$T_C$ ..... Case temperature.
$V_{CC}$ ..... Positive supply voltage.

6.6 Logistic support. Lead materials and finishes (see 3.4) are interchangeable. Unless otherwise specified, microcircuits acquired for Government logistic support will be acquired to device class S for National Aeronautics and Space Administration or class B for Department of Defense (see 1.2.2), lead material and finish A (see 3.4). Longer length leads and lead forming should not affect the part number.

6.7 Data reporting. When specified in the purchase order or contract, a copy of the following data, as applicable, will be supplied.

a. Attributes data for all screening tests (see 4.2) and variables data for all static burn-in, dynamic burn-in, and steady-state life tests (see 3.6).

b. A copy of each radiograph.

c. The technology conformance inspection (TCI) data (see 4.4).

d. Parameter distribution data on parameters evaluated during burn-in (see 3.6).

e. Final electrical parameters data (see 4.2d).

6.8 Substitutability. The cross-reference information below is presented for the convenience of users. Microcircuits covered by this specification will functionally replace the listed generic-industry type. Generic-industry microcircuit types may not have equivalent operational performance characteristics across military temperature ranges or reliability factors equivalent to MIL-M-35810 device types and may have slight physical variations in relation to case size. The presence of this information should not be deemed as permitting substitution of generic-industry types for MIL-M-38510 types or as a waiver of any of the provisions of MIL-PRF-38535.

| Military device type | Generic-industry type |
|---|---|
| 01 | 54HC02 |
| 02 | 54HC27 |
| 03 | 54HC266 |
| 04 | 54HC4002 |
| 05 | 54HC7266 |

6.9 Changes from previous issue. Marginal notations are not used in this revision to identify changes with respect to the previous issue due to the extent of the changes.

Custodians:
Army - CR
Navy - EC
Air Force - 11
DLA - CC

Review activities:
Army - MI, SM
Navy - AS, CG, MC, SH, TD
Air Force – 03, 19, 99

Preparing activity:
DLA - CC

(Project 5962-2005-018)

NOTE: The activities listed above were interested in this document as of the date of this document. Since organizations and responsibilities can change, you should verify the currency of the information above using ASSIST Online database at http://assist.daps.dla.mil.