INCH-POUND

MIL-M-38510/63C
25 October 2006
SUPERSEDING
MIL-M-38510/63B
20 July 2005

MILITARY SPECIFICATION

MICROCIRCUITS, DIGITAL, ECL, QUAD TRANSLATOR, MONOLITHIC SILICON

Inactive for new design after 8 July 1997.

This specification is approved for use by all Departments and Agencies of the Department of Defense.

The requirements for acquiring the product herein shall consist of this specification sheet and MIL-PRF 38535

1. SCOPE

1.1 Scope. This specification covers the detail requirements for monolithic silicon, ECL, logic gating microcircuits. Two product assurance classes and a choice of case outlines and lead finishes are provided for each type and are reflected in the complete part number. For this product, the requirements of MIL-M-38510 have been superseded by MIL-PRF-38535, (see 6.3).

1.2 Part or Identifying Number (PIN). The PIN is in accordance with MIL-PRF-38535, and as specified herein.

1.2.1 Device types. The device types are as follows:

Device type	Circuit
01	Quad translator, TTL to ECL
02	Quad translator, ECL to TTL

1.2.2 Device class. The device class is the product assurance level as defined in MIL-PRF-38535.

1.2.3 Case outlines. The case outlines are as designated in MIL-STD-1835 and as follows:

Outline letter	Descriptive designator	Terminals	Package style
E	GDIP15-T16 or CDIP2-T16	16	Dual-in-line
F	GDFP2-F16 or CDFP3-F16	16	Flat

Comments, suggestions, or questions on this document should be addressed to: Commander, Defense Supply Center Columbus, ATTN: DSCC-VAS, P.O. Box 3990, Columbus, OH 43218-3990, or emailed to bipolar@dla.mil . Since contact information can change, you may want to verify the currency of this address information using the ASSIST Online database at http://assist.daps.dla.mil .

AMSC N/A FSC 5962

1.3 Absolute maximum ratings.

Supply voltage range:	
For V_{EE}	0 V dc to -7.0 V dc for V_{EE}
For V_{CC}	0 V dc to +7.0 V dc for V_{CC}
Input voltage range:	
Device type 01	+5.0 V dc to GND
Device type 02	GND to V_{EE}
Storage temperature range	-65° to +150°C
Maximum power dissipation per gate (P_D) 1/:	
Device type 01	145 mW
Device type 02	130 mW
Lead temperature (soldering, 10 seconds)	+260°C
Thermal resistance, junction to case (θ_{JC})	See MIL-STD-1835
Junction temperature (T_J) 2/	165°C
Maximum output current:	
Device type 01	-50 mA
Device type 02	+24 mA

1.4 Recommended operating conditions.

Supply voltage (V_{CC})	-5.46 V minimum to +5.5 V maximum
Minimum high level input voltage (V_{IH})	-1.105 V at T_A = +25°C (ECL), 2.0 V (TTL)
(at 500 linear ft/min)	-1.000 V at T_A = +125°C (ECL), 2.0 V (TTL)
(ft/min)	-1.255 V at T_A = -55°C (ECL), 2.0 V (TTL)
Maximum low level input voltage (V_{IL})	-1.475 V at T_A = +25°C (ECL), 0.8 V (TTL)
(at 500 linear ft/min)	-1.400 V at T_A = +125°C (ECL), 0.8 V (TTL)
(ft/min)	-1.510 V at T_A = -55°C (ECL),0.8 V (TTL)
Normalized fanout (each output) 3/	10 maximum
Case operating temperature range (T_C):	
(at 500 linear ft/min)	-55° to +125°C
Case operating temperature range (T_C):	
(at still air):	
Device type 01	-55° to +105°C (case E)
	-55° to +115°C (case F)
Device type 02	-55° to +115°C (case E)
	-55° to +120°C (case F)

2. APPLICABLE DOCUMENTS

2.1 General. The documents listed in this section are specified in sections 3, 4, or 5 of this specification. This section does not include documents cited in other sections of this specification or recommended for additional information or as examples. While every effort has been made to ensure the completeness of this list, document users are cautioned that they must meet all specified requirements of documents cited in sections 3, 4, or 5 of this specification, whether or not they are listed.

1/ Must withstand the added P_D due to short-circuit test (e.g., I_{OS}).
2/ Maximum junction temperature shall not be exceeded except for allowable short duration burn-in screening conditions in accordance with MIL-PRF-38535.
3/ Device will fanout in both high and low levels to the specified number of data inputs on the same device type as that being tested.

2.2 Government documents.

2.2.1 Specifications and Standards. The following specifications and standards form a part of this specification to the extent specified herein. Unless otherwise specified, the issues of these documents are those cited in the solicitation or contract.

DEPARTMENT OF DEFENSE SPECIFICATIONS

MIL-PRF-38535 - Integrated Circuits (Microcircuits) Manufacturing, General Specification for.

DEPARTMENT OF DEFENSE STANDARDS

MIL-STD-883 - Test Method Standard for Microcircuits.
MIL-STD-1835 - Interface Standard Electronic Component Case Outlines

(Copies of these documents are available online at http://assist.daps.dla.mil/quicksearch/ or http://assist.daps.dla.mil or from the Standardization Document Order Desk, 700 Robbins Avenue, Building 4D, Philadelphia, PA 19111-5094.)

2.3 Order of precedence. In the event of a conflict between the text of this specification and the references cited herein, the text of this document takes precedence. Nothing in this document, however, supersedes applicable laws and regulations unless a specific exemption has been obtained.

3. REQUIREMENTS

3.1 Qualification. Microcircuits furnished under this specification shall be products that are manufactured by a manufacturer authorized by the qualifying activity for listing on the applicable qualified manufacturers list before contract award (see 4.3 and 6.4).

3.2 Item requirements. The individual item requirements shall be in accordance with MIL-PRF-38535 and as specified herein or as modified in the device manufacturer's Quality Management (QM) plan. The modification in the QM plan shall not affect the form, fit, or function as described herein.

3.3 Design, construction, and physical dimensions. The design, construction, and physical dimensions shall be as specified in MIL-PRF-38535 and herein.

3.3.1 Terminal connections and logic diagrams. The terminal connections and logic diagrams shall be as specified on figure 1.

3.3.2 Truth tables. The truth tables shall be as specified on figure 2.

3.3.3 Test circuits and switching waveforms. The test circuits and switching waveforms shall be specified on figure 3.

3.3.4 Schematic circuits. The schematic circuits shall be maintained by the manufacturer and made available to the qualifying activity and the preparing activity upon request.

3.3.5 Case outlines. The case outlines shall be as specified in 1.2.3.

3.4 Lead material and finish. The lead material and finish shall be in accordance with MIL-PRF-38535 (see 6.6).

3.5 Electrical performance characteristics. The electrical performance characteristics are as specified in table I, and apply over the full recommended case operating temperature range, unless otherwise specified.

TABLE I. Electrical performance characteristics.

Test	Symbol	Conditions 1/ 2/ -55°C ≤ T_C ≤ +125°C				Device types	Limits Min	Limits Max	Unit
			T_C	V_{IH1}	V_{IL1}				
High level output voltage	V_{OH} (TTL)	V_{EE} = -5.2 V, V_{CC} = +5.0 V, Load = 100 Ω to -2 V	+25°C	+2.4 V	+0.4 V	01	-0.930	-0.780	V
			+125°C	+2.4 V	+0.4 V		-0.825	-0.630	
			-55°C	+2.4 V	+0.4 V		-1.080	-0.880	
	V_{OH} (ECL)	V_{EE} = -5.2 V, V_{CC} = +5.0 V, Load = -2 mA	+25°C	-0.780 V	-1.850 V	02	2.5	- - -	V
			+125°C	-0.630 V	-1.820 V		2.5	- - -	
			-55°C	-0.880 V	-1.920 V		2.5	- - -	
			T_C	V_{IH1}	V_{IL1}				
Low level output voltage	V_{OL} (TTL)	V_{EE} = -5.2 V, V_{CC} = +5.0 V, Load = 100 Ω to -2 V	+25°C	+2.4 V	+0.4 V	01	-1.850	-1.620	V
			+125°C	+2.4 V	+0.4 V		-1.820	-1.545	
			-55°C	+2.4 V	+0.4 V		-1.920	-1.655	
	V_{OL} (ECL)	V_{EE} = -5.2 V, V_{CC} = +5.0 V, Load = +12 mA	+25°C	-0.780 V	-1.850 V	02	- - -	0.5	V
			+125°C	-0.630 V	-1.820 V		- - -	0.5	
			-55°C	-0.880 V	-1.920 V		- - -	0.5	
			T_C	v_{ITH}	V_{ITL}				
High level threshold output voltage	V_{OTH} (TTL)	V_{EE} = -5.2 V, V_{CC} = +5.0 V, Load = 100 Ω to -2 V	+25°C	+1.8 V	+1.0 V	01	-0.950	- - -	V
			+125°C	+1.8 V	+0.8 V		-0.845	- - -	
			-55°C	+2.0 V	+1.1 V		-1.100	- - -	
	V_{OTH} (ECL)	V_{EE} = -5.2 V, V_{CC} = +5.0 V, Load = -2 mA	+25°C	-1.105 V	-1.475 V	02	2.5	- - -	V
			+125°C	-1.000 V	-1.400 V		2.5	- - -	
			-55°C	-1.255 V	-1.510 V		2.5	- - -	
			T_C	v_{ITH}	V_{ITL}				
Low level threshold output voltage	V_{OTL} (TTL)	V_{EE} = -5.2 V, V_{CC} = +5.0 V, Load = 100 Ω to -2 V	+25°C	+1.8 V	+1.1 V	01	- - -	-1.600	V
			+125°C	+1.8 V	+0.8 V		- - -	-1.525	
			-55°C	+2.0 V	+1.1 V		- - -	-1.635	
	V_{OTL} (ECL)	V_{EE} = -5.2 V, V_{CC} = +5.0 V, Load = +12 mA	+25°C	-1.105 V	-1.475 V	02	- - -	0.5	V
			+125°C	-1.000 V	-1.400 V		- - -	0.5	
			-55°C	-1.255 V	-1.510 V		- - -	0.5	
Low level output voltage inputs floating	V_{OLS}	V_{EE} = -5.2 V, V_{CC} = +5.0 V				02	- - -	0.5	V

See footnotes at end of table

TABLE I. Electrical performance characteristics – Continued.

Test	Symbol	Conditions 1/ 2/ -55°C ≤ T_C ≤ +125°C		Device types	Limits Min	Limits Max	Unit
Bias voltage	V_{BB}		T_C = +25°C	02	-1.35	-1.23	V
			T_C = +125°C		-1.24	-1.12	
			T_C = -55°C		-1.44	-1.32	
Input clamp voltage	V_{IC}	V_{EE} = -5.2 V, V_{CC} = +5.0 V		01	-1.5	- - -	V
High level input current	I_{IH1}	V_{EE} = -5.2 V, V_{CC} = +5.0 V		01	- - -	50	μA
				02	- - -	196	
	I_{IH2}			01	- - -	200	
Input leakage current	I_{CBO}	V_{EE} = -5.2 V, V_{CC} = +5.0 V		02	-1.5	- - -	μA
Short circuit current	I_{OS}	V_{EE} = -5.2 V, V_{CC} = +5.0 V	T_C = +25°C	02	-40	-100	mA
			T_C = +125°C		-35	-100	
			T_C = -55°C		-40	-100	
Low level input current	I_{IL1}	V_{EE} = -5.2 V, V_{CC} = +5.0 V	All other inputs	01	-3.2	- - -	mA
	I_{IL2}		B input 3/		-12.8	- - -	
Low level positive supply current	I_{CCL}	V_{EE} = -5.2 V, V_{CC} = +5.0 V		01	- - -	25	mA
				02	- - -	39	
High level positive supply current	I_{CCH}	V_{EE} = -5.2 V, V_{CC} = +5.0 V		01	- - -	18	mA
				02	- - -	57	
Power supply draw current	I_{EE}	V_{EE} = -5.2 V, V_{CC} = +5.0 V		01	-73	- - -	mA
				02	-44	- - -	

See footnotes at end of table

TABLE I. Electrical performance characteristics – Continued.

Test	Symbol	Conditions 1/ 2/ $-55°C \le T_C \le +125°C$	Device types	Limits Min	Limits Max	Unit
Input breakdown voltage	BV_{IN}	V_{EE} = -5.2 V, V_{CC} = +5.0 V, I_{IN} = 1 mA	01	5.5	- - -	V
Transition time, low-to-high level	t_{TLH}	V_{EEL} = -3.2 V, V_{CCH} = +7.0 V, V_{GG} = +2.0 V, Load = 100 Ω to GND	01	1.0	5.0	ns
		V_{EE} = -5.2 V, V_{CC} = +5.0 V, Load = 450 Ω 25 pF	02	- - -	5.3	
Transition time, high-to-low level	t_{THL}	V_{EEL} = -3.2 V, V_{CCH} = +7.0 V, V_{GG} = +2.0 V, Load = 100 Ω to GND	01	1.0	5.0	ns
		V_{EE} = -5.2 V, V_{CC} = +5.0 V, Load = 450 Ω 25 pF	02	- - -	5.3	
Propagation delay time, low-to-high level	t_{PLH}	V_{EEL} = -3.2 V, V_{CCH} = +7.0 V, V_{GG} = +2.0 V, Load = 100 Ω to GND	01	1.0	8.0	ns
		V_{EE} = -5.2 V, V_{CC} = +5.0 V, Load = 450 Ω 25 pF	02	1.0	7.0	
Propagation delay time, high-to-low level	t_{PHL}	V_{EEL} = -3.2 V, V_{CCH} = +7.0 V, V_{GG} = +2.0 V, Load = 100 Ω to GND	01	1.0	8.0	ns
		V_{EE} = -5.2 V, V_{CC} = +5.0 V, Load = 450 Ω 25 pF	02	1.0	7.0	

1/ Complete terminal conditions shall be as specified in table III.
2/ For voltages, the minimum and maximum limits are based on algebraic values. For currents, the minimum and maximum limits are determined by absolute value where the sign is only an indication of conventional current direction (i.e., current into terminal is positive).
3/ Applicable to "B" inputs only.

3.6 Electrical test requirements. The electrical test requirements for each device class shall be the subgroups specified in table II. The electrical tests for each subgroup are described in table III.

3.7 Marking. Marking shall be in accordance with MIL-PRF-38535.

3.8 Microcircuit group assignment. The devices covered by this specification shall be in microcircuit group number 30 (see MIL-PRF-38535, appendix A).

TABLE II. Electrical test requirements.

MIL-PRF-38535 test requirements	Subgroups (see table III)	
	Class S devices	Class B devices
Interim electrical parameters	1	1
Final electrical test parameters	1*, 2, 3, 9 10, 11	1*, 2, 3, 9
Group A test requirements	1, 2, 3, 9, 10, 11	1, 2, 3, 9
Group B electrical test parameters	1, 2, 3, 9, 10, 11	N/A
Group C end-point electrical parameters	1, 2, 3, 9, 10, 11	1, 2, 3
Additional electrical subgroups for group C periodic inspections	N/A	10, 11
Group D end-point electrical parameters	1, 2, 3	1, 2, 3

*PDA applies to subgroup 1.

4. VERIFICATION

4.1 Sampling and inspection. Sampling and inspection procedures shall be in accordance with MIL-PRF-38535 or as modified in the device manufacturer's Quality Management (QM) plan. The modification in the QM plan shall not affect the form, fit, or function as described herein.

4.2 Screening. Screening shall be in accordance with MIL-PRF-38535 and shall be conducted on all devices prior to qualification and conformance inspection. The following additional criteria shall apply:

a. The burn-in test duration, test condition, and test temperature, or approved alternatives shall be as specified in the device manufacturer's QM plan in accordance with MIL-PRF-38535. The burn-in test circuit shall be maintained under document control by the device manufacturer's Technology Review Board (TRB) in accordance with MIL-PRF-38535 and shall be made available to the acquiring or preparing activity upon request. The test circuit shall specify the inputs, outputs, biases, and power dissipation, as applicable, in accordance with the intent specified in test method 1015 of MIL-STD-883.

b. Interim and final electrical test parameters shall be as specified in table II, except interim electrical parameters test prior to burn-in is optional at the discretion of the manufacturer.

c. Additional screening for space level product shall be as specified in MIL-PRF-38535, Appendix B.

4.3 Qualification inspection. Qualification inspection shall be in accordance with MIL-PRF-38535.

4.4 Technology Conformance inspection (TCI). Technology conformance inspection shall be in accordance with MIL-PRF-38535 and herein for groups A, B, C, and D inspections (see 4.4.1 through 4.4.4).

4.4.1 Group A inspection. Group A inspection shall be in accordance with table III of MIL-PRF-38535 and as follows:

a. Tests shall be as specified in table II herein.

b. Subgroups 4, 5, 6, 7, and 8 shall be omitted.

4.4.2 Group B inspection. Group B inspection shall be in accordance with table II MIL-PRF-38535.

4.4.3 Group C inspection. Group C inspection shall be in accordance with table IV of MIL-PRF-38535 and as follows:

a. End-point electrical parameters shall be as specified in table II herein.

b. The steady-state life test duration, test condition, and test temperature, or approved alternatives shall be as specified in the device manufacturer's QM plan in accordance with MIL-PRF-38535. The burn-in test circuit shall be maintained under document control by the device manufacturer's Technology Review Board (TRB) in accordance with MIL-PRF-38535 and shall be made available to the acquiring or preparing activity upon request. The test circuit shall specify the inputs, outputs, biases, and power dissipation, as applicable, in accordance with the intent specified in test method 1005 of MIL-STD-883.

c. Subgroups 3 and 4 shall be added to the group C inspection requirements for class B devices and shall consist of the tests, conditions, and limits specified for subgroups 10 and 11 of group A. The sample size series number shall be 5 (45 devices accept on 0).

4.4.4 Group D inspection. Group D inspection shall be in accordance with table V of MIL-PRF-38535. End-point electrical parameters shall be as specified in table II herein.

4.5 Methods of inspection. Methods of inspection shall be as specified and as follows:

4.5.1 Voltage and current. All voltages given are referenced to the microcircuit ground terminal. Currents given are conventional and positive when flowing into the referenced terminal.

DEVICE TYPE 01

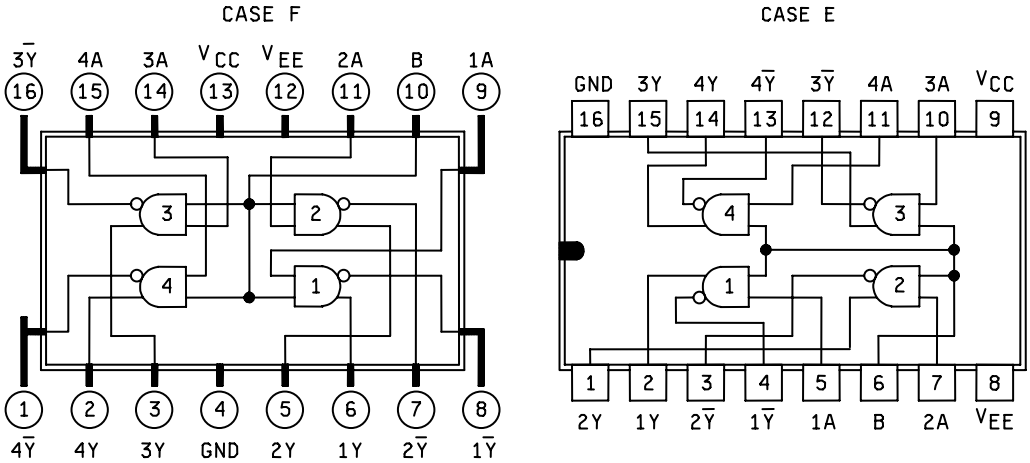

DEVICE TYPE 02

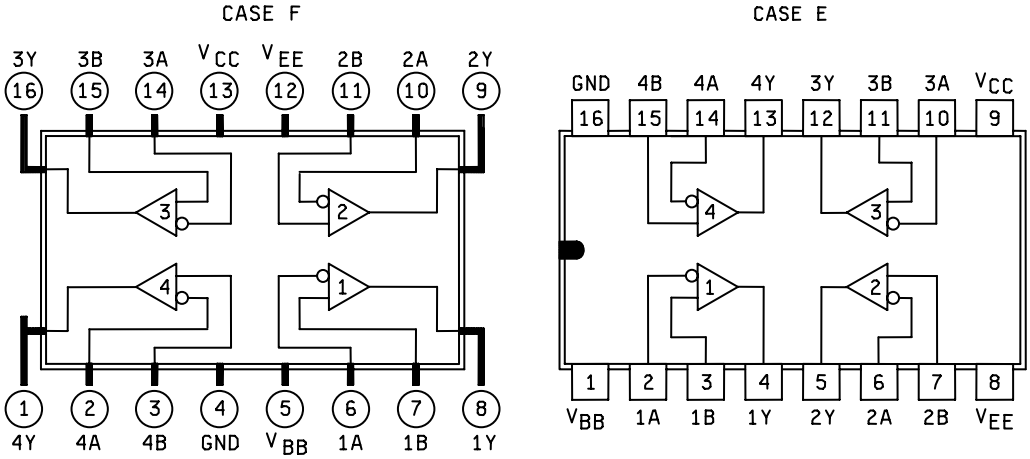

FIGURE 1. Terminal connections and logic diagrams.

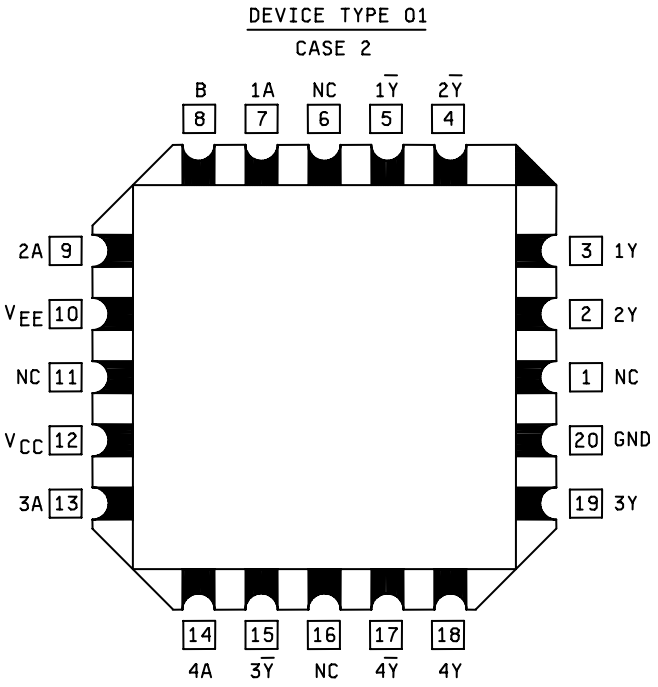

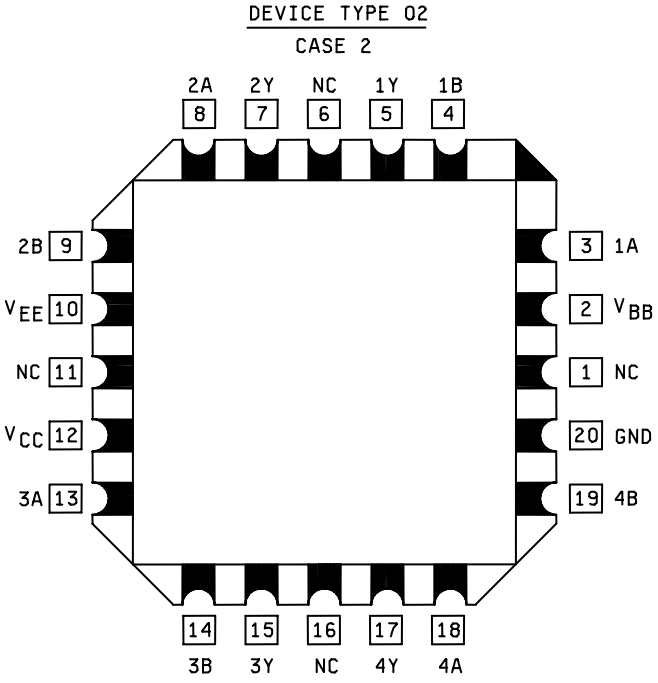

FIGURE 1. Terminal connections and logic diagrams - Continued.

Device type 01

Truth table each gate			
Input		Output	
A	B	Y	$\overline{Y}$
L	L	L	H
H	L	L	H
L	H	L	H
H	H	H	L

Device type 02

Truth Table		
Input		Output
A	B	Y
L	L	*
L	H	H
H	L	L
H	V_{BB}	L
L	V_{BB}	H
Open	Open	L
V_{BB}	H	H
V_{BB}	L	L
H	H	*

* Not defined

FIGURE 2. Truth tables.

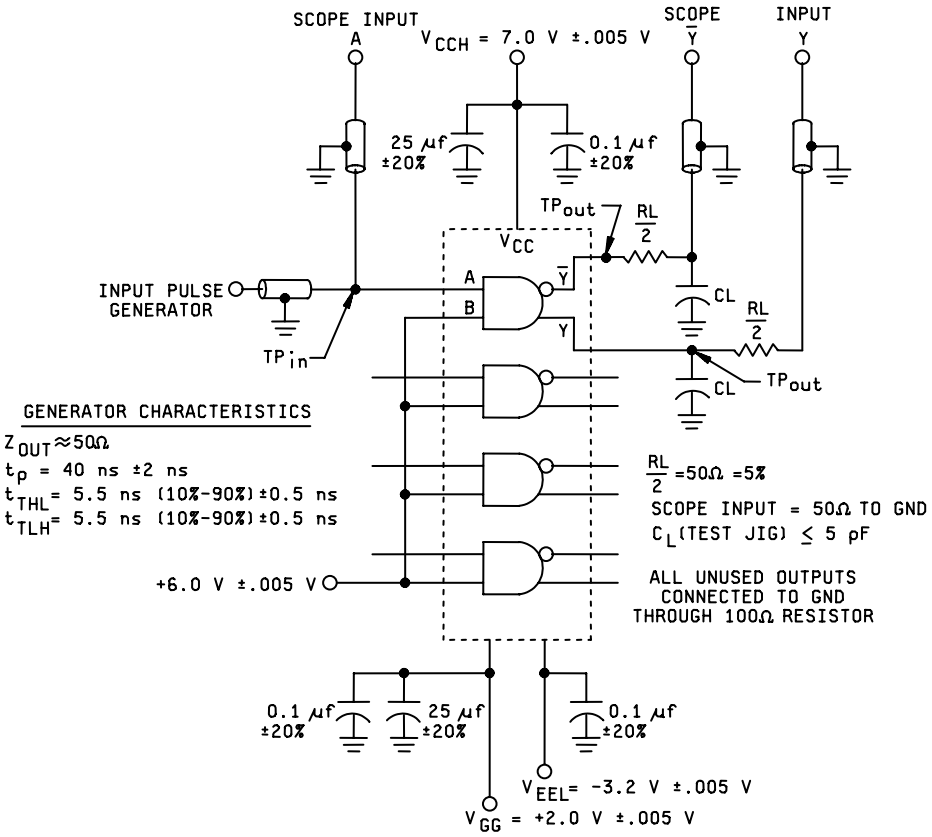

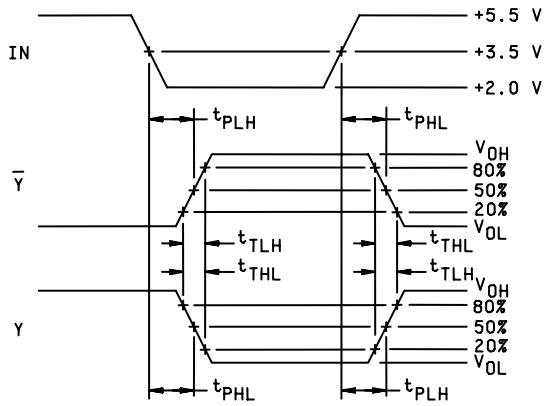

NOTES:

1. Perform test in accordance with test table; each output is tested separately.
2. All input and output cables are equal lengths of 50 ohm coaxial cables. Wire length should be ≤ .250 inch (6.35 mm) from t_P in to input pin and TP out to output pin.
3. Outputs not under test connected to a 100 ohm resistor to ground.

FIGURE 3. Test circuit and switching waveforms for device type 01.

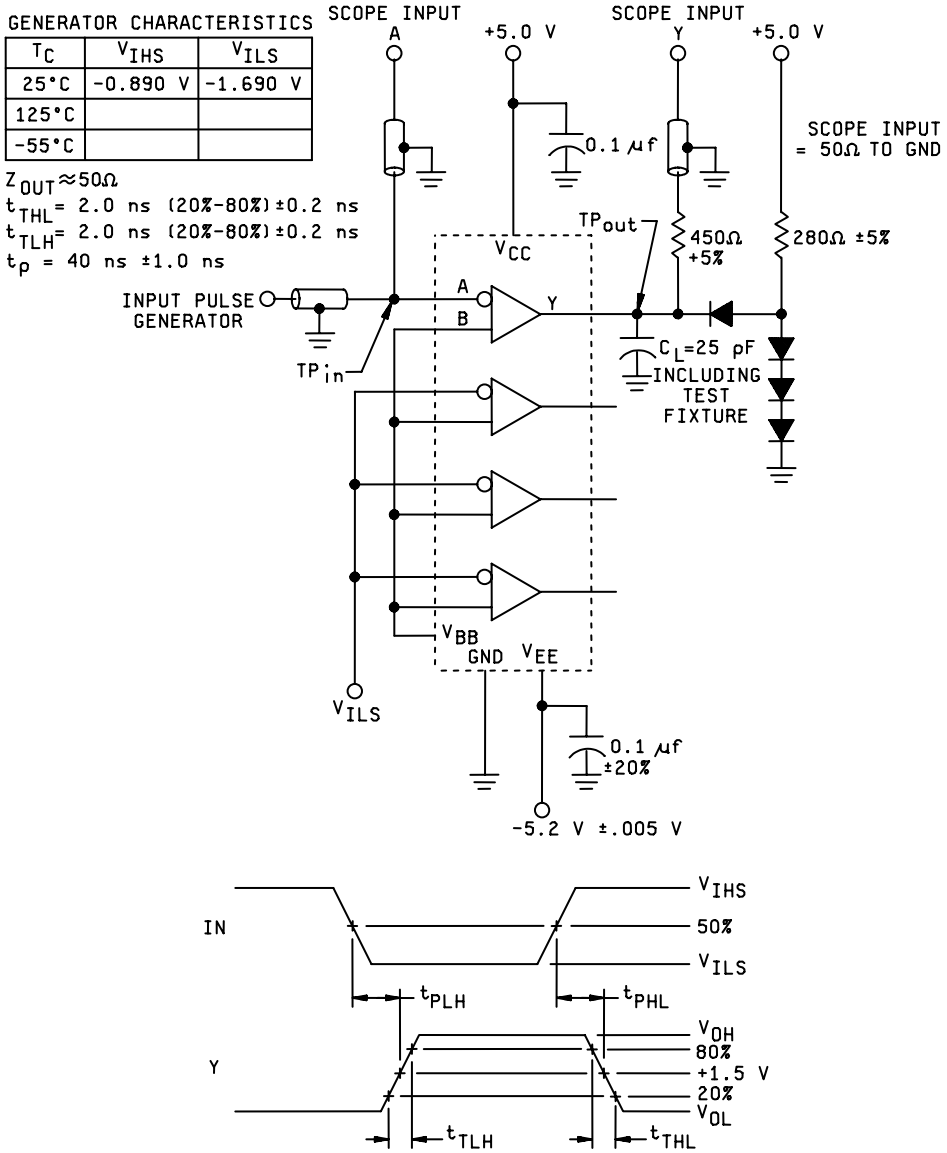

NOTES:

1. Perform test in accordance with test table; each output is tested separately.
2. All input and output cables are equal lengths of 50 ohm coaxial cables. Wire length should be ≤ .250 inch (6.35 mm) from t_p in to input pin and TP out to output pin.
3. All diodes are 1N3064 or equivalent.

FIGURE 4. Test circuit and switching waveforms for device type 02.

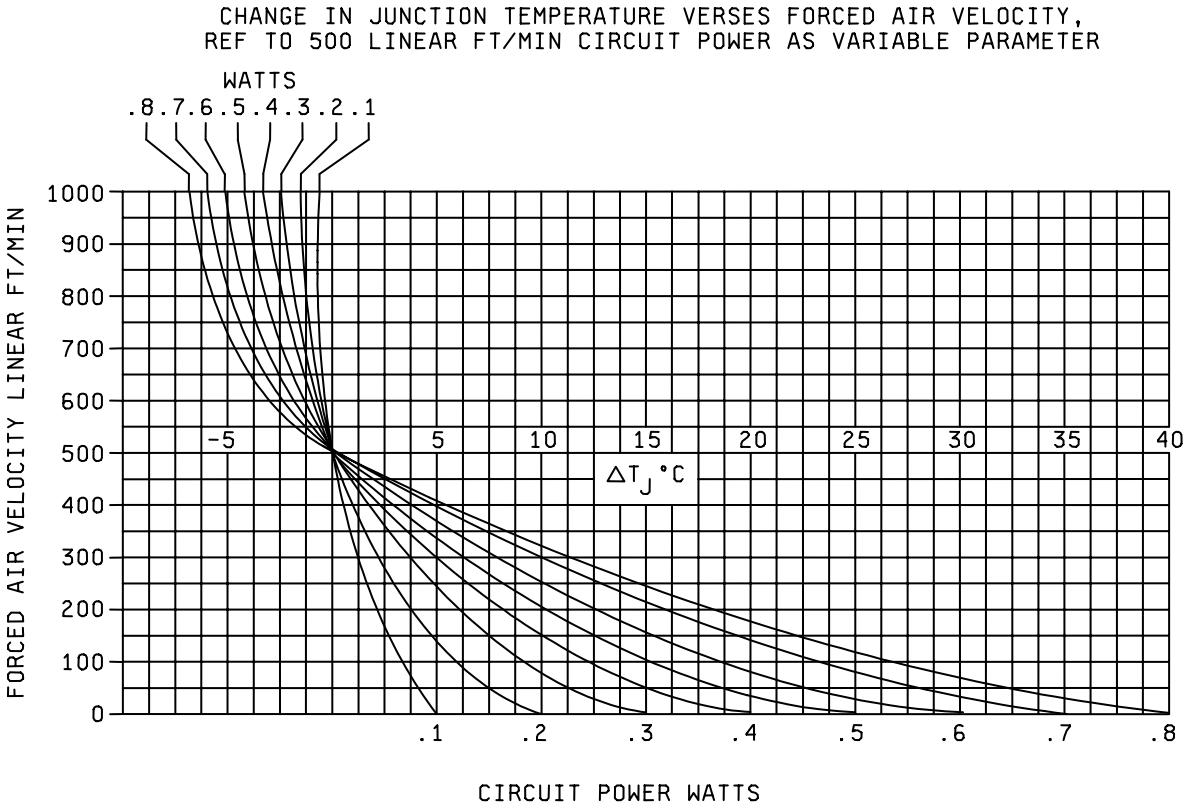

(Case E)

FIGURE 5. Junction temperature -vs- force air velocity.

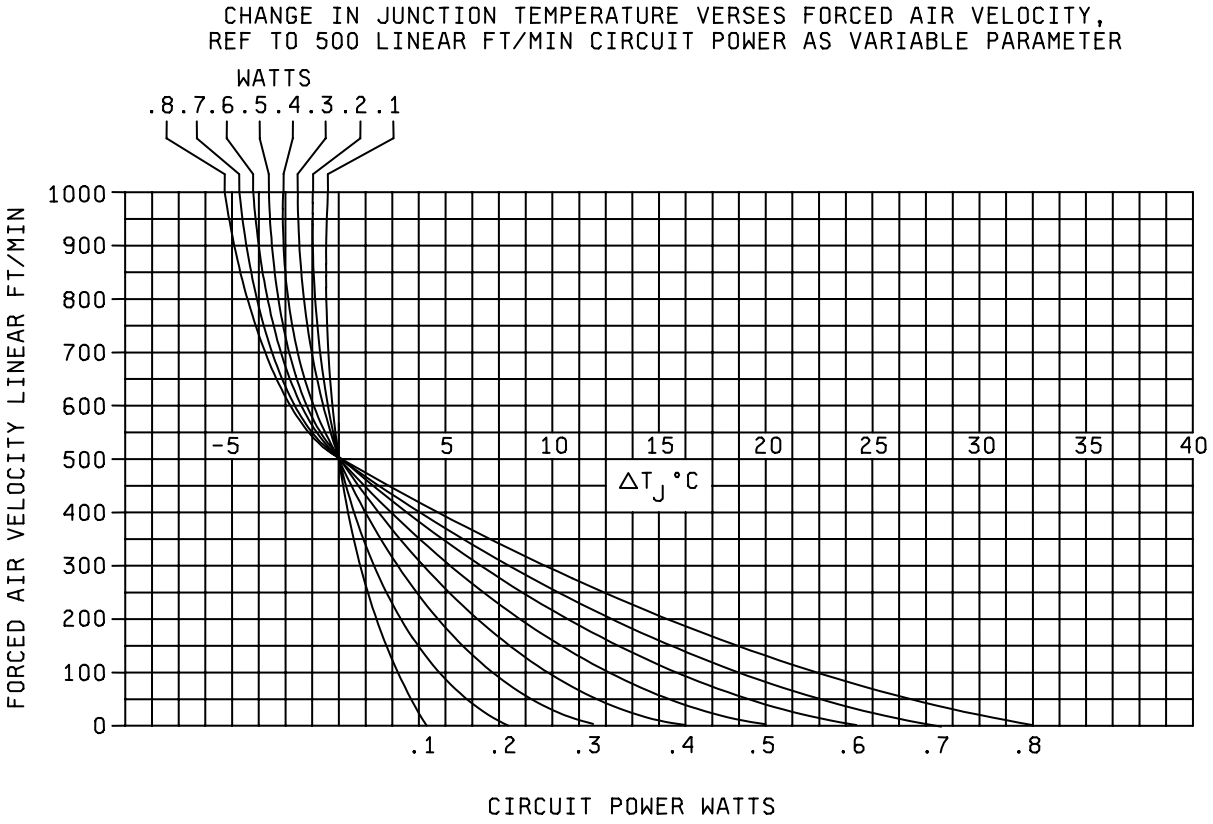

(Case F)

FIGURE 6. Junction temperature -vs- forced air velocity.

	-55°C (mV/°C)		+25°C (mV/°C)		+125°C (mV/°C)	
PARAMETER	$+\Delta T_J$	$-\Delta T_J$	$+\Delta T_J$	$-\Delta T_J$	$+\Delta T_J$	$-\Delta T_J$
V_{OH} max, V_{IH1}	1.25	1.25	1.50	1.25	1.50	1.50
V_{OH} min, V_{OTH}	1.88	1.88	1.05	1.88	1.05	1.05
V_{OL} max, V_{OTL}	0.44	0.44	0.75	0.44	0.75	0.75
V_{OL} min, V_{IL}	0.88	0.88	0.30	0.88	0.30	0.30
V_{ITH}	1.88	1.88	1.05	1.88	1.05	1.05
V_{ITL}	0.44	0.44	0.75	0.44	0.75	0.75

FIGURE 7. Adjustment coefficients for forcing function and test limit compensation.

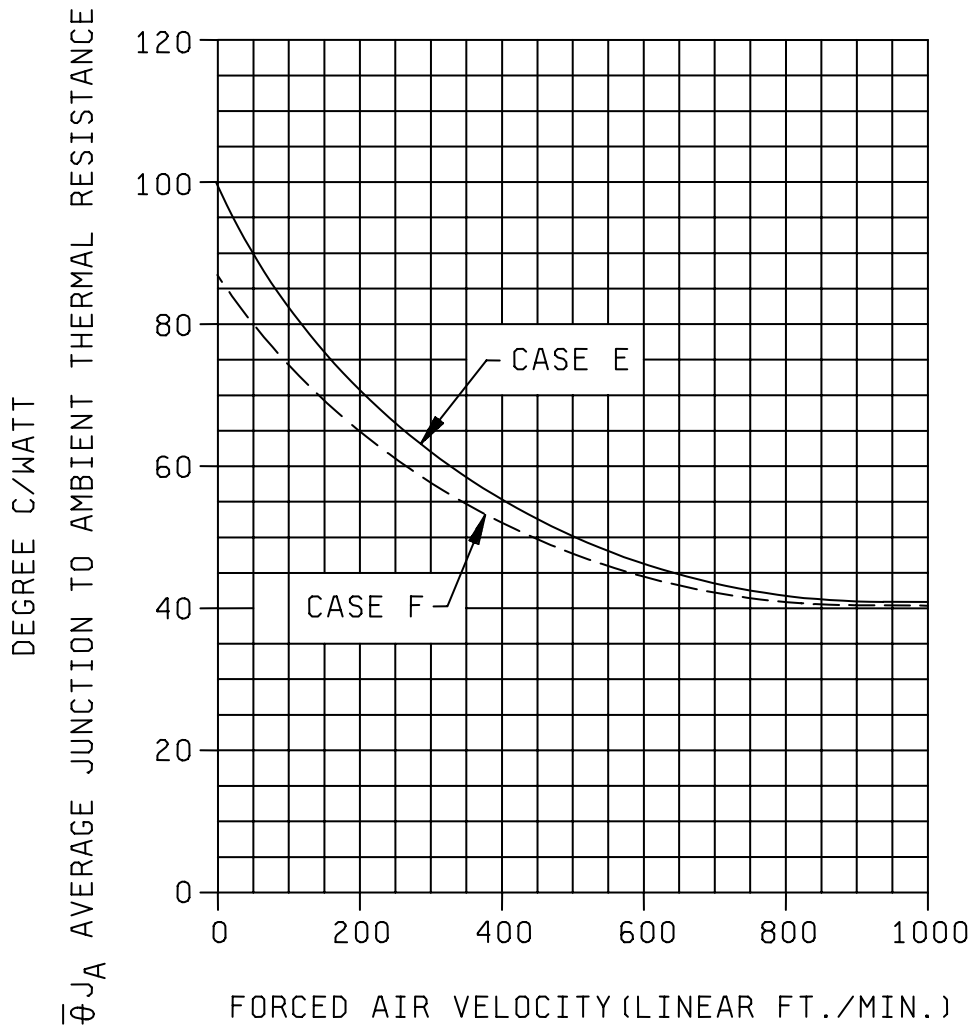

NOTE: ($\overline{\theta}$ J_A -vs- forced air velocity) for case (E) and (F)

$I_J = T_C + \overline{\theta}\ J_A \times P_D$ (max).

FIGURE 8. Air velocity versus average thermal resistance

TABLE III. Group A inspection for device type 01.

Terminal conditions (pins not designated may be high ≥ 2.0 V, low ≤ 0.8 V or open)

Subgroup	Symbol	MIL-STD-883 method	Case E	1	2	3	4	5	6	7	8	9	10	11	12	13	14	15	16	Measured terminal	Limits Min	Limits Max	Unit
			Case F	5	6	7	8	9	10	11	12	13	14	15	16	1	2	3	4				
			Case 2	2	3	4	5	7	8	9	10	12	13	14	15	17	18	19	20				
			Test no.	2Y	1Y	$2\overline{Y}$	$1\overline{Y}$	1A	B	2A	V_{EE}	V_{CC}	3A	4A	$3\overline{Y}$	$4\overline{Y}$	4Y	3Y	GND				
1 Tc = 25°C	V_{OH}	3006	1	LD_1	LD_1	LD_1	LD_1	V_{IH}	V_{IH}	V_{IH}	V_{EE}	V_{CC}	V_{IH}	V_{IH}	LD_1	LD_1	LD_1	LD_1	GND	1Y	-.93	-.780	V
	"		2	"	"	"	"		"		"	"	"	"	"	"	"	"	"	2Y	"	"	"
	"		3	"	"	"	"		"		"	"	"	"	"	"	"	"	"	3Y	"	"	"
	"		4	"	"	"	"		"		"	"	"	"	"	"	"	"	"	4Y	"	"	"
	"		5	"	"	"	"		V_{IL}		"	"	"	"	"	"	"	"	"	$1\overline{Y}$	"	"	"
	"		6	"	"	"	"		"		"	"	"	"	"	"	"	"	"	$2\overline{Y}$	"	"	"
	"		7	"	"	"	"		"		"	"	"	"	"	"	"	"	"	$3\overline{Y}$	"	"	"
	"		8	"	"	"	"		"		"	"	"	"	"	"	"	"	"	$4\overline{Y}$	"	"	"
2	"	Same tests, terminal conditions as for subgroup 1, except Tc = 125°.																			-.825	-.63	"
3	"	Same tests, terminal conditions as for subgroup 1, except Tc = -55°.																			-1.08	-.880	"
1 Tc = 25°C	V_{OL}	3007	9	LD_1	LD_1	LD_1	LD_1				V_{EE}	V_{CC}	V_{IH}	V_{IH}	LD_1	LD_1	LD_1	LD_1	GND	1Y	-1.85	-1.62	V
	"		10	"	"	"	"				"	"	"	"	"	"	"	"	"	2Y	"	"	"
	"		11	"	"	"	"				"	"	"	"	"	"	"	"	"	3Y	"	"	"
	"		12	"	"	"	"				"	"	"	"	"	"	"	"	"	4Y	"	"	"
	"		13	"	"	"	"				"	"	"	"	"	"	"	"	"	$1\overline{Y}$	"	"	"
	"		14	"	"	"	"				"	"	"	"	"	"	"	"	"	$2\overline{Y}$	"	"	"
	"		15	"	"	"	"				"	"	"	"	"	"	"	"	"	$3\overline{Y}$	"	"	"
	"		16	"	"	"	"				"	"	"	"	"	"	"	"	"	$4\overline{Y}$	"	"	"
2	"	Same tests, terminal conditions as for subgroup 1, except Tc = 125°C.																			-1.82	-1.545	"
3	"	Same tests, terminal conditions as for subgroup 1, except Tc = -55°C.																			-1.92	-1.655	"
1 Tc = 25°C	V_{OTH}		17	LD_1	LD_1	LD_1	LD_1	V_{ITH}	V_{IH}	V_{IH}	V_{EE}	V_{CC}	V_{IH}	V_{IH}	LD_1	LD_1	LD_1	LD_1	GND	1Y	-.95		V
	"		18	"	"	"	"	V_{IH}	"	V_{ITH}	"	"	"	"	"	"	"	"	"	2Y	"		"
	"		19	"	"	"	"	"	"	V_{IH}	"	"	V_{ITH}	"	"	"	"	"	"	3Y	"		"
	"		20	"	"	"	"	"	"	"	"	"	V_{IH}	V_{ITH}	"	"	"	"	"	4Y	"		"
	"		21	"	"	"	"	"	V_{ITH}	"	"	"	"	V_{IH}	"	"	"	"	"	1Y	"		"
	"		22	"	"	"	"	"	"	"	"	"	"	"	"	"	"	"	"	2Y	"		"
	"		23	"	"	"	"	"	"	"	"	"	"	"	"	"	"	"	"	3Y	"		"
	"		24	"	"	"	"	"	"	"	"	"	"	"	"	"	"	"	"	4Y	"		"
	"		25	"	"	"	"	"	V_{ITL}	"	"	"	"	"	"	"	"	"	"	$1\overline{Y}$	"		"
	"		26	"	"	"	"	"	"	"	"	"	"	"	"	"	"	"	"	$2\overline{Y}$	"		"
	"		27	"	"	"	"	"	"	"	"	"	"	"	"	"	"	"	"	$3\overline{Y}$	"		"
	"		28	"	"	"	"	"	"	"	"	"	"	"	"	"	"	"	"	$4\overline{Y}$	"		"
	"		29	"	"	"	"	V_{ITL}	V_{IH}	"	"	"	"	"	"	"	"	"	"	$1\overline{Y}$	"		"
	"		30	"	"	"	"	V_{IH}	"	V_{ITL}	"	"	"	"	"	"	"	"	"	$2\overline{Y}$	"		"
	"		31	"	"	"	"	"	"	V_{IH}	"	"	V_{ITL}	"	"	"	"	"	"	$3\overline{Y}$	"		"
	"		32	"	"	"	"	"	"	"	"	"	V_{IH}	V_{ITL}	"	"	"	"	"	$4\overline{Y}$	"		"
2	"	Same tests, terminal conditions as for subgroup 1, except Tc = 125°C.																			-.845		"
3	"	Same tests, terminal conditions as for subgroup 1, except Tc = -55°C.																			-1.1		"
1 Tc = 25°C	V_{OTL}		33	LD_1	LD_1	LD_1	LD_1	V_{ITL}	V_{IH}	V_{IH}	V_{EE}	V_{CC}	V_{IH}	V_{IH}	LD_1	LD_1	LD_1	LD_1	GND	1Y		-1.6	V
	"		34	"	"	"	"	V_{IH}	"	V_{ITL}	"	"	"	"	"	"	"	"	"	2Y		"	"
	"		35	"	"	"	"	"	"	V_{IH}	"	"	V_{ITL}	"	"	"	"	"	"	3Y		"	"
	"		36	"	"	"	"	"	"	"	"	"	V_{IH}	V_{ITL}	"	"	"	"	"	4Y		"	"
	"		37	"	"	"	"	"	V_{ITL}	"	"	"	"	V_{IH}	"	"	"	"	"	1Y		"	"
	"		38	"	"	"	"	"	"	"	"	"	"	"	"	"	"	"	"	2Y		"	"
	"		39	"	"	"	"	"	"	"	"	"	"	"	"	"	"	"	"	3Y		"	"
	"		40	"	"	"	"	"	"	"	"	"	"	"	"	"	"	"	"	4Y		"	"
2	"	Same tests, terminal conditions as for subgroup 1, except Tc = 125°C.																				-1.525	"
3	"	Same tests, terminal conditions as for subgroup 1, except Tc = -55°C.																				-1.635	"

TABLE III. Group A inspection for device type 01 - Continued.

Subgroup	Symbol	MIL-STD-883 method	Case E / Case F / Case 2 / Test no.	1 / 5 / 2 / 2Y	2 / 6 / 3 / 1Y	3 / 7 / 4 / $2\overline{Y}$	4 / 8 / 5 / $1\overline{Y}$	5 / 9 / 7 / 1A	6 / 10 / 8 / B	7 / 11 / 9 / 2A	8 / 12 / 10 / V_{EE}	9 / 13 / 12 / V_{CC}	10 / 14 / 13 / 3A	11 / 15 / 14 / 4A	12 / 16 / 15 / $3\overline{Y}$	13 / 1 / 17 / $4\overline{Y}$	14 / 2 / 18 / 4Y	15 / 3 / 19 / 3Y	16 / 4 / 20 / GND	Measured terminal	Limits Min	Limits Max	Unit
1	V_{OTL}		41	LD_1	LD_1	LD_1	LD_1	V_{IH}	V_{ITL}	V_{IH}	V_{EE}	V_{CC}	V_{IH}	V_{IH}	LD_1	LD_1	LD_1	LD_1	GND	$1\overline{Y}$		-1.6	V
Tc = 25°C	"		42	"	"	"	"	"	"	"	"	"			"	"	"	"	"	$2\overline{Y}$		"	"
	"		43	"	"	"	"	"	"	"	"	"			"	"	"	"	"	$3\overline{Y}$		"	"
	"		44	"	"	"	"	"	"	"	"	"			"	"	"	"	"	$4\overline{Y}$		"	"
	"		45	"	"	"	"	V_{ITH}	V_{IH}	"	"	"			"	"	"	"	"	$1\overline{Y}$		"	"
	"		46	"	"	"	"	V_{IH}	"	V_{ITH}	"	"			"	"	"	"	"	$2\overline{Y}$		"	"
	"		47	"	"	"	"	"	"	"	"	"	V_{ITH}		"	"	"	"	"	$3\overline{Y}$		"	"
	"		48	"	"	"	"	"	"	"	"	"	V_{IH}	V_{ITH}	"	"	"	"	"	$4\overline{Y}$		"	"
2	"	Same tests, terminal conditions as for subgroup 1, except Tc = 125°C.																				-1.525	"
3	"	Same tests, terminal conditions as for subgroup 1, except Tc = -55°C.																				-1.635	"
1	V_{IC}		49					-10mA			V_{EE}	V_{CC}							GND	1A	-1.5		V
Tc = 25°C	"		50							-10 mA	"	"							"	2A	"		"
	"		51								"	"	-10 mA						"	3A	"		"
	"		52								"	"		-10 mA					"	4A	"		"
	"		53						-20 mA		"	"							"	B	"		"
1	I_{IH1}	3010	54					V_{IH}	GND		V_{EE}	V_{CC}							GND	1A		50	µA
Tc = 25°C	"		55						"	V_{IH}	"	"							"	2A		"	"
	"		56						"		"	"	V_{IH}						"	3A		"	"
	"		57						"		"	"		V_{IH}					"	4A		"	"
2	"	Same tests, terminal conditions as for subgroup 1, except Tc = 125°C.																				85	"
3	"	Same tests, terminal conditions as for subgroup 1, except Tc = -55°C.																				85	"
1	I_{IH2}	3010	58					GND	V_{IH}	GND	V_{EE}	V_{CC}	GND	GND					GND	B		200	µA
Tc = 25°C																							
2	"	Same tests, terminal conditions as for subgroup 1, except Tc = 125°C.																				340	"
3	"	Same tests, terminal conditions as for subgroup 1, except Tc = -55°C.																				340	"
	I_{IL1}	3009	59					V_{IL}	V_{IH}		V_{EE}	V_{CC}							GND	1A	-3.2	"	mA
	"		60						"	V_{IL}	"	"							"	2A	"	"	"
	"		61						"		"	"	V_{IL}						"	3A	"	"	"
	"		62						"		"	"		V_{IL}					"	4A	"	"	"
	"	Same tests, terminal conditions as for subgroup 1, except Tc = 125°C.																			-5.5		"
	"	Same tests, terminal conditions as for subgroup 1, except Tc = -55°C.																			-3.2		"
1	I_{IL2}	3009	63						V_{IL}		V_{EE}	V_{CC}							GND	B	-12.8		mA
Tc = 25°C																							
2	"	Same tests, terminal conditions as for subgroup 1, except Tc = 125°C.																			-22.0		"
3	"	Same tests, terminal conditions as for subgroup 1, except Tc = -55°C.																			-12.8		"
1	BV_{IN}		64					1 mA	V_{IL}		V_{EE}	V_{CC}							GND	1A	5.5		V
Tc = 25°C	"		65						"	1 mA	"	"								2A	"		"
	"		66						"		"	"	1 mA							3A	"		"
	"		67						"		"	"		1 mA						4A	"		"
	"		68					V_{IL}	1 mA	V_{IL}	"	"	V_{IL}	V_{IL}						B	"		"
2	"	Same tests, terminal conditions as for subgroup 1, except Tc = 125°C.																			5.5		"
3	"	Same tests, terminal conditions as for subgroup 1, except Tc = -55°C.																			5.5		"
1	I_{CCL}	3005	69					GND	GND	GND	V_{EE}	V_{CC}	GND	GND					GND	V_{CC}		25	mA
Tc = 25°C																							
2	"	Same tests, terminal conditions as for subgroup 1, except Tc = 125°C.																				28	"
3	"	Same tests, terminal conditions as for subgroup 1, except Tc = -55°C.																				28	"
1	I_{CCH}	3005	70					5.0 V	5.0 V	5.0 V	V_{EE}	V_{CC}	5.0 V	5.0 V					GND	V_{CC}		16	mA
Tc = 25°C																							
2	"	Same tests, terminal conditions as for subgroup 1, except Tc = 125°C.																				18	"
3	"	Same tests, terminal conditions as for subgroup 1, except Tc = -55°C.																				18	"
1	I_{EE}	3005	71								V_{EE}	V_{CC}							GND	V_{EE}	-66		mA
Tc = 25°C																							
2	"	Same tests, terminal conditions as for subgroup 1, except Tc = 125°C.																			-73		"
3	"	Same tests, terminal conditions as for subgroup 1, except Tc = -55°C.																			-73		"

TABLE III. Group A inspection for device type 01 - Continued.

Subgroup	Symbol	MIL-STD-883 method	Case E / Case F / Case 2 / Test no.	1 / 5 / 2 / 2Y	2 / 6 / 3 / 1Y	3 / 7 / 4 / $2\overline{Y}$	4 / 8 / 5 / $1\overline{Y}$	5 / 9 / 7 / 1A	6 / 10 / 8 / B	7 / 11 / 9 / 2A	8 / 12 / 10 / V_{EE}	9 / 13 / 12 / V_{CC}	10 / 14 / 13 / 3A	11 / 15 / 14 / 4A	12 / 16 / 15 / $3\overline{Y}$	13 / 1 / 17 / $4\overline{Y}$	14 / 2 / 18 / 4Y	15 / 3 / 19 / 3Y	16 / 4 / 20 / GND	Measured terminal	Limits Min	Limits Max	Unit
1	t_{PLH}	3003	72	LD_2	OUT	LD_2	LD_2	IN	6.0 V		V_{EEL}	V_{CCH}			LD_2	LD_2	LD_2	LD_2	V_{GG}	1Y	1.0	6.0	ns
Tc = 25°C	"	Fig. 3	73	"	LD_2	"	OUT	IN	"		"	"			"	"	"	"	"	$1\overline{Y}$	"	"	"
	"		74	OUT	"	"	LD_2		"	IN	"	"			"	"	"	"	"	2Y	"	"	"
	"		75	LD_2	"	OUT	"		"	IN	"	"			"	"	"	"	"	$2\overline{Y}$	"	"	"
	"		76	"	"	LD_2	"		"		"	"	IN		"	"	"	OUT	"	3Y	"	"	"
	"		77	"	"	"	"		"		"	"	IN		OUT	"	"	LD_2	"	$3\overline{Y}$	"	"	"
	"		78	"	"	"	"		"		"	"		IN	LD_2	"	OUT	"	"	4Y	"	"	"
	"		79	"	"	"	"		"		"	"		IN	"	OUT	LD_2	"	"	$4\overline{Y}$	"	"	"
2	"	Same tests, terminal conditions as for subgroup 1, except Tc = 125°C.																			1.0	8.0	"
3	"	Same tests, terminal conditions as for subgroup 1, except Tc = -55°C.																			1.0	8.0	"
1	t_{PHL}	3003	80	LD_2	OUT	LD_2	LD_2	IN	6.0 V		V_{EEL}	V_{CCH}			LD_2	LD_2	LD_2	LD_2	V_{GG}	1Y	1.0	6.0	ns
Tc = 25°C	"	Fig. 3	81	"	LD_2	"	OUT	IN	"		"	"			"	"	"	"	"	$1\overline{Y}$	"	"	"
	"		82	OUT	"	"	LD_2		"	IN	"	"			"	"	"	"	"	2Y	"	"	"
	"		83	LD_2	"	OUT	"		"	IN	"	"			"	"	"	"	"	$2\overline{Y}$	"	"	"
	"		84	"	"	LD_2	"		"		"	"	IN		"	"	"	OUT	"	3Y	"	"	"
	"		85	"	"	"	"		"		"	"	IN		OUT	"	"	LD_2	"	$3\overline{Y}$	"	"	"
	"		86	"	"	"	"		"		"	"		IN	LD_2	"	OUT	"	"	4Y	"	"	"
	"		87	"	"	"	"		"		"	"		IN	"	OUT	LD_2	"	"	$4\overline{Y}$	"	"	"
2	"	Same tests, terminal conditions as for subgroup 1, except Tc = 125°C.																			1.0	8.0	"
3	"	Same tests, terminal conditions as for subgroup 1, except Tc = -55°C.																			1.0	8.0	"
1	t_{TLH}	3004	88	LD_2	OUT	LD_2	LD_2	IN	6.0 V		V_{EEL}	V_{CCH}			LD_2	LD_2	LD_2	LD_2	V_{GG}	1Y	1.0	3.9	ns
Tc = 25°C	"	Fig. 3	89	"	LD_2	"	OUT	IN	"		"	"			"	"	"	"	"	$1\overline{Y}$	"	"	"
	"		90	OUT	"	"	LD_2		"	IN	"	"			"	"	"	"	"	2Y	"	"	"
	"		91	LD_2	"	OUT	"		"	IN	"	"			"	"	"	"	"	$2\overline{Y}$	"	"	"
	"		92	"	"	LD_2	"		"		"	"	IN		"	"	"	OUT	"	3Y	"	"	"
	"		93	"	"	"	"		"		"	"	IN		OUT	"	"	LD_2	"	$3\overline{Y}$	"	"	"
	"		94	"	"	"	"		"		"	"		IN	LD_2	"	OUT	"	"	4Y	"	"	"
	"		95	"	"	"	"		"		"	"		IN	"	OUT	LD_2	"	"	$4\overline{Y}$	"	"	"
2	"	Same tests, terminal conditions as for subgroup 1, except Tc = 125°C.																			1.0	5.0	"
3	"	Same tests, terminal conditions as for subgroup 1, except Tc = -55°C.																			1.0	5.0	"
1	t_{THL}	3004	96	LD_2	OUT	LD_2	LD_2	IN	6.0 V		V_{EEL}	V_{CCH}			LD_2	LD_2	LD_2	LD_2	V_{GG}	1Y	1.0	3.9	ns
Tc = 25°C	"	Fig. 3	97	"	LD_2	"	OUT	IN	"		"	"			"	"	"	"	"	$1\overline{Y}$	"	"	"
	"		98	OUT	"	"	LD_2		"	IN	"	"			"	"	"	"	"	2Y	"	"	"
	"		99	LD_2	"	OUT	"		"	IN	"	"			"	"	"	"	"	$2\overline{Y}$	"	"	"
	"		100	"	"	LD_2	"		"		"	"	IN		"	"	"	OUT	"	3Y	"	"	"
	"		101	"	"	"	"		"		"	"	IN		OUT	"	"	LD_2	"	$3\overline{Y}$	"	"	"
	"		102	"	"	"	"		"		"	"		IN	LD_2	"	OUT	"	"	4Y	"	"	"
	"		103	"	"	"	"		"		"	"		IN	"	OUT	LD_2	"	"	$4\overline{Y}$	"	"	"
2	"	Same tests, terminal conditions as for subgroup 1, except Tc = 125°C.																			1.0	5.0	"
3	"	Same tests, terminal conditions as for subgroup 1, except Tc = -55°C.																			1.0	5.0	"

TABLE III. Group A inspection for device type 02.
Terminal conditions (pins not designated may be high ≥ 2.0 V, low ≤ 0.8 V or open)

Subgroup	Symbol	MIL-STD-883 method	Case E	1	2	3	4	5	6	7	8	9	10	11	12	13	14	15	16	Measured terminal	Limits		Unit
			Case F	5	6	7	8	9	10	11	12	13	14	15	16	1	2	3	4				
			Case 2	2	3	4	5	7	8	9	10	12	13	14	15	17	18	19	20				
			Test no.	V_{BB}	1A	1B	1Y	2Y	2A	2B	V_{EE}	V_{CC}	3A	3B	3Y	4Y	4A	4B	GND		Min	Max	
1	V_{OH}	3006	1		V_{IL}	V_{IH}	I_{OH}		V_{IL}	V_{IH}	V_{EE}	V_{CC}	V_{IL}	V_{IH}			V_{IL}	V_{IH}	GND	1Y	2.5		V
Tc = 25°C	"		2		"	"		I_{OH}	"	"	"	"	"	"			"	"	"	2Y	"		"
	"		3		"	"			"	"	"	"	"	"	I_{OH}		"	"	"	3Y	"		"
	"		4		"	"			"	"	"	"	"	"		I_{OH}	"	"	"	4Y	"		"
	"		5		V_{ILL}	V_{ILL}	I_{OH}		V_{ILL}	V_{IL}	"	"	V_{ILL}	V_{IL}			V_{ILL}	V_{IL}	"	1Y	"		"
	"		6		"	"		I_{OH}	"	"	"	"	"	"			"	"	"	2Y	"		"
	"		7		"	"			"	"	"	"	"	"	I_{OH}		"	"	"	3Y	"		"
	"		8		"	"			"	"	"	"	"	"		I_{OH}	"	"	"	4Y	"		"
	"		9		V_{ILH}	V_{ILH}	I_{OH}		V_{ILH}	V_{IHH}	"	"	V_{ILH}	V_{IHH}			V_{ILH}	V_{IHH}	"	1Y			
	"		10		"	"		I_{OH}	"	"	"	"	"	"			"	"	"	2Y	"		"
	"		11		"	"			"	"	"	"	"	"	I_{OH}		"	"	"	3Y	"		"
	"		12		"	"			"	"	"	"	"	"		I_{OH}	"	"	"	4Y	"		"
	"		13		V_{ILL}	V_{IHL}	I_{OH}		V_{ILL}	V_{IHL}	"	"	V_{ILL}	V_{IHL}			V_{ILL}	V_{IHL}	"	1Y	"		"
	"		14		"	"		I_{OH}	"	"	"	"	"	"			"	"	"	2Y	"		"
	"		15		"	"			"	"	"	"	"	"	I_{OH}		"	"	"	3Y	"		"
	"		16		"	"			"	"	"	"	"	"		I_{OH}	"	"	"	4Y	"		"
2	"	Same tests, terminal conditions as for subgroup 1, except Tc = 125°C.																			2.5		"
3	"	Same tests, terminal conditions as for subgroup 1, except Tc = -55°C.																			2.5		"
1	V_{OL}	3007	17		V_{IH}	V_{IL}	I_{OL}		V_{IH}	V_{IL}	V_{EE}	V_{CC}	V_{IH}	V_{IL}			V_{IH}	V_{IL}	GND	1Y		0.5	V
Tc = 25°C	"		18		"	"		I_{OL}	"	"	"	"	"	"			"	"	"	2Y		"	"
	"		19		"	"			"	"	"	"	"	"	I_{OL}		"	"	"	3Y		"	"
	"		20		"	"			"	"	"	"	"	"		I_{OL}	"	"	"	4Y		"	"
	"		21		V_{IHH}	V_{IH}	I_{OL}		V_{IHH}	V_{IH}	"	"	V_{IHH}	V_{IH}			V_{IHH}	V_{IH}	"	1Y		"	"
	"		22		"	"		I_{OL}	"	"	"	"	"	"			"	"	"	2Y		"	"
	"		23		"	"			"	"	"	"	"	"	I_{OL}		"	"	"	3Y		"	"
	"		24		"	"			"	"	"	"	"	"		I_{OL}	"	"	"	4Y		"	"
	"		25		"	V_{ILH}	I_{OL}		"	V_{ILH}	"	"	"	V_{ILH}			"	V_{ILH}	"	1Y			
	"		26		"	"		I_{OL}	"	"	"	"	"	"			"	"	"	2Y		"	"
	"		27		"	"			"	"	"	"	"	"	I_{OL}		"	"	"	3Y		"	"
	"		28		"	"			"	"	"	"	"	"		I_{OL}	"	"	"	4Y		"	"
	"		29		V_{IHL}	V_{ILL}	I_{OL}		V_{IHL}	V_{ILL}	"	"	V_{IHL}	V_{ILL}			V_{IHL}	V_{ILL}	"	1Y		"	"
	"		30		"	"		I_{OL}	"	"	"	"	"	"			"	"	"	2Y		"	"
	"		31		"	"			"	"	"	"	"	"	I_{OL}		"	"	"	3Y		"	"
	"		32		"	"			"	"	"	"	"	"		I_{OL}	"	"	"	4Y		"	"
2	"	Same tests, terminal conditions as for subgroup 1, except Tc = 125°C.																				0.5	"
3	"	Same tests, terminal conditions as for subgroup 1, except Tc = -55°C.																				0.5	"
1	V_{OTH}		33	V_{BB}	V_{ITL}	V_{BB}	I_{OH}		V_{IL}	V_{BB}	V_{EE}	V_{CC}	V_{IL}	V_{BB}			V_{IL}	V_{BB}	GND	1Y	2.5		V
Tc = 25°C	"		34	"	V_{IL}	"		I_{OH}	V_{ITL}	"	"	"	"	"			"	"	"	2Y	"		"
	"		35	"	"	"			V_{IL}	"	"	"	V_{ITL}	"	I_{OH}		"	"	"	3Y	"		"
	"		36	"	"	"			"	"	"	"	V_{IL}	"		I_{OH}	V_{ITL}	"	"	4Y	"		"
2	"	Same tests, terminal conditions as for subgroup 1, except Tc = 125°C.																			2.5		"
3	"	Same tests, terminal conditions as for subgroup 1, except Tc = -55°C.																			2.5		"
1	V_{OTL}		37	V_{BB}	V_{ITH}	V_{BB}	I_{OL}		V_{IL}	V_{BB}	V_{EE}	V_{CC}	V_{IL}	V_{BB}			V_{IL}	V_{BB}	GND	1Y		0.5	V
Tc = 25°C	"		38	"	V_{IL}	"		I_{OL}	V_{ITH}	"	"	"	"	"			"	"	"	2Y		"	"
	"		39	"	"	"			V_{IL}	"	"	"	V_{ITH}	"	I_{OL}		"	"	"	3Y		"	"
	"		40	"	"	"			"	"	"	"	V	"		I_{OL}	V_{ITH}	"	"	4Y		"	"
2	"	Same tests, terminal conditions as for subgroup 1, except Tc = 125°C.																				0.5	"
3	"	Same tests, terminal conditions as for subgroup 1, except Tc = -55°C.																				0.5	"
1	V_{OLS}		41				I_{OL}				V_{EE}	V_{CC}			I_{OL}				GND	1Y		0.5	V
Tc = 25°C	"		42					I_{OL}			"	"				I_{OL}			"	2Y		"	"
	"		43								"	"							"	3Y		"	"
	"		44								"	"							"	4Y		"	"
	"		45				I_{OL}				"	"			I_{OL}				"	1Y		"	"
	"		46					I_{OL}			"	"				I_{OL}			"	2Y		"	"
	"		47								"	"							"	3Y		"	"
	"		48								"	"							"	4Y		"	"
2	"	Same tests, terminal conditions as for subgroup 1, except Tc = 125°C.																				0.5	"
3	"	Same tests, terminal conditions as for subgroup 1, except Tc = -55°C.																				0.5	"

TABLE III. Group A inspection for device type 02 - Continued.

Subgroup	Symbol	MIL-STD-883 method	Case E	1	2	3	4	5	6	7	8	9	10	11	12	13	14	15	16	Measured terminal	Limits		Unit
			Case F	5	6	7	8	9	10	11	12	13	14	15	16	1	2	3	4				
			Case 2	2	3	4	5	7	8	9	10	12	13	14	15	17	18	19	20				
			Test no.	V_{BB}	1A	1B	1Y	2Y	2A	2B	V_{EE}	V_{CC}	3A	3B	3Y	4Y	4A	4B	GND		Min	Max	
1 Tc = 25°C	V_{BB}		49	V_{BB}		V_{BB}				V_{BB}	V_{EE}	V_{CC}		V_{BB}				V_{BB}	GND	V_{BB}	-1.35	-1.23	V
2	"	Same tests, terminal conditions as for subgroup 1, except Tc = 125°C.																			-1.24	-1.12	"
3	"	Same tests, terminal conditions as for subgroup 1, except Tc = -55°C.																			-1.44	-1.32	"
1 Tc = 25°C	I_{IH1}	3010	50	V_{BB}	V_{IH}	V_{BB}				V_{BB}	V_{EE}	V_{CC}		V_{BB}				V_{BB}	GND	1A		115	µA
	"		51	"						"	"	"		"				"	"	2A		"	"
	"		52	"						"	"	"	V_{IH}	"				"	"	3A		"	"
	"		53	"						"	"	"		"			V_{IH}	"	"	4A		"	"
	"		54	"	V_{BB}	V_{IH}			V_{BB}	"	"	"	V_{BB}	"			V_{BB}		"	1B		"	"
	"		55	"	"				"	V_{IH}	"	"	"				"		"	2B		"	"
	"		56	"	"				"		"	"	"	V_{IH}			"		"	3B		"	"
	"		57	"	"				"	"	"	"	"				"	V_{IH}	"	4B		"	"
2	"	Same tests, terminal conditions as for subgroup 1, except Tc = 125°C.																				196	"
3	"	Same tests, terminal conditions as for subgroup 1, except Tc = -55°C.																				196	"
1 Tc = 25°C	I_{CBO}		58	V_{BB}	V_{EE}	V_{BB}			V_{BB}	V_{BB}	V_{EE}	V_{CC}	V_{BB}	V_{BB}			V_{BB}	V_{BB}	GND	1A	-1.0		µA
	"		59	"		"			V_{EE}	"	"	"		"				"	"	2A	"		"
	"		60	"		"				"	"	"	V_{EE}	"				"	"	3A	"		"
	"		61	"		"				"	"	"		"			V_{EE}	"	"	4A	"		"
	"		62	"	V_{BB}	V_{EE}			V_{BB}	"	"	"	V_{BB}	"			V_{BB}		"	1B	"		"
	"		63	"	"				"	V_{EE}	"	"	"						"	2B	"		"
	"		64	"	"				"		"	"	"	V_{EE}					"	3B	"		"
	"		65	"	"				"		"	"	"					V_{EE}	"	4B	"		"
2	"	Same tests, terminal conditions as for subgroup 1, except Tc = 125°C.																			-1.0		"
3	"	Same tests, terminal conditions as for subgroup 1, except Tc = -55°C.																			-1.5		"
1 Tc = 25°C	I_{OS}		66	V_{BB}	V_{IL}	V_{BB}	GND		V_{IL}	V_{BB}	V_{EE}	V_{CC}	V_{IL}	V_{BB}			V_{IL}	V_{BB}	GND	1Y	-40	-100	mA
	"		67	"	"	"		GND	"	"	"	"	"	"			"	"	"	2Y	"	"	"
	"		68	"	"	"			"	"	"	"	"	"			"	"	"	3Y	"	"	"
	"		69	"	"	"			"	"	"	"	"	"			"	"	"	4Y	"	"	"
2	"	Same tests, terminal conditions as for subgroup 1, except Tc = 125°C.																			-35	-100	"
3	"	Same tests, terminal conditions as for subgroup 1, except Tc = -55°C.																			-40	-100	"
1 Tc = 25°C	I_{CCL}	3005	70	V_{BB}	V_{IL}	V_{BB}			V_{IL}	V_{BB}	V_{EE}	V_{CC}	V_{IL}	V_{BB}			V_{IL}	V_{BB}	GND	V_{CC}		39	mA
2	"	Same tests, terminal conditions as for subgroup 1, except Tc = 125°C.																				39	"
3	"	Same tests, terminal conditions as for subgroup 1, except Tc = -55°C.																				39	"
1 Tc = 25°C	I_{CCH}	3005	71	V_{BB}	V_{IH}	V_{BB}			V_{IH}	V_{BB}	V_{EE}	V_{CC}	V_{IH}	V_{BB}			V_{IH}	V_{BB}	GND	V_{CC}		52	mA
2	"	Same tests, terminal conditions as for subgroup 1, except Tc = 125°C.																				52	"
3	"	Same tests, terminal conditions as for subgroup 1, except Tc = -55°C.																				52	"
1 Tc = 25°C	I_{EE}	3005	72	V_{BB}		V_{BB}				V_{BB}	V_{EE}	V_{CC}		V_{BB}				V_{BB}	GND	V_{EE}	-40		mA
2	"	Same tests, terminal conditions as for subgroup 1, except Tc = 125°C.																			-44		"
3	"	Same tests, terminal conditions as for subgroup 1, except Tc = -55°C.																			-40		"

TABLE III. Group A inspection for device type 02 - Continued.

Subgroup	Symbol	MIL-STD-883 method	Case E	1	2	3	4	5	6	7	8	9	10	11	12	13	14	15	16	Measured terminal	Limits		Unit
			Case F	5	6	7	8	9	10	11	12	13	14	15	16	1	2	3	4				
			Case 2	2	3	4	5	7	8	9	10	12	13	14	15	17	18	19	20				
			Test no.	V_{BB}	1A	1B	1Y	2Y	2A	2B	V_{EE}	V_{CC}	3A	3B	3Y	4Y	4A	4B	GND		Min	Max	
1	t_{PLH}	3003	73	V_{BB}	IN	V_{BB}	OUT		V_{ILS}	V_{BB}	V_{EE}	V_{CC}	V_{ILS}	V_{BB}			V_{ILS}	V_{BB}	GND	1Y	1.0	6.0	ns
Tc = 25°C	"	Fig. 4	74	"	V_{ILS}	"		OUT	IN	"	"	"	V_{ILS}	"			"	"	"	2Y	"	"	"
	"		75	"	"	"			V_{ILS}	"	"	"	IN	"	OUT		"	"	"	3Y	"	"	"
	"		76	"	"	"			"	"	"	"	V_{ILS}	"		OUT	IN	"	"	4Y	"	"	"
2	"	Same tests, terminal conditions as for subgroup 1, except Tc = 125°C.																			1.0	7.0	"
3	"	Same tests, terminal conditions as for subgroup 1, except Tc = -55°C.																			1.0	6.5	"
1	t_{PHL}	3003	77	V_{BB}	IN	V_{BB}	OUT		V_{ILS}	V_{BB}	V_{EE}	V_{CC}	V_{ILS}	V_{BB}			V_{ILS}	V_{BB}	GND	1Y	1.0	6.0	ns
Tc = 25°C	"	Fig. 4	78	"	V_{ILS}	"		OUT	IN	"	"	"	V_{ILS}	"			"	"	"	2Y	"	"	"
	"		79	"	"	"			V_{ILS}	"	"	"	IN	"	OUT		"	"	"	3Y	"	"	"
	"		80	"	"	"			"	"	"	"	V_{ILS}	"		OUT	IN	"	"	4Y	"	"	"
2	"	Same tests, terminal conditions as for subgroup 1, except Tc = 125°C.																			1.0	7.0	"
3	"	Same tests, terminal conditions as for subgroup 1, except Tc = -55°C.																			1.0	6.5	"
1	t_{TLH}	3004	81	V_{BB}	IN	V_{BB}	OUT		V_{ILS}	V_{BB}	V_{EE}	V_{CC}	V_{ILS}	V_{BB}			V_{ILS}	V_{BB}	GND	1Y		3.3	ns
Tc = 25°C	"	Fig. 4	82	"	V_{ILS}	"		OUT	IN	"	"	"	V_{ILS}	"			"	"	"	2Y		"	"
	"		83	"	"	"			V_{ILS}	"	"	"	IN	"	OUT		"	"	"	3Y		"	"
	"		84	"	"	"			"	"	"	"	V_{ILS}	"		OUT	IN	"	"	4Y		"	"
2	"	Same tests, terminal conditions as for subgroup 1, except Tc = 125°C.																				5.3	"
3	"	Same tests, terminal conditions as for subgroup 1, except Tc = -55°C.																				4.5	"
1	t_{THL}	3004	85	V_{BB}	IN	V_{BB}	OUT		V_{ILS}	V_{BB}	V_{EE}	V_{CC}	V_{ILS}	V_{BB}			V_{ILS}	V_{BB}	GND	1Y		3.3	ns
Tc = 25°C	"	Fig. 4	86	"	V_{ILS}	"		OUT	IN	"	"	"	V_{ILS}	"			"	"	"	2Y		"	"
	"		87	"	"	"			V_{ILS}	"	"	"	IN	"	OUT		"	"	"	3Y		"	"
	"		88	"	"	"			"	"	"	"	V_{ILS}	"		OUT	IN	"	"	4Y		"	"
2	"	Same tests, terminal conditions as for subgroup 1, except Tc = 125°C.																				5.3	"
3	"	Same tests, terminal conditions as for subgroup 1, except Tc = -55°C.																				4.5	"

TABLE IV. Test conditions for group A inspection for device type 01.

Symbol	V_{IH} (V)	V_{IL} (V)	V_{ITL} (V)	V_{ITH} (V)	V_{EE} (V)	V_{EEL} (V)	V_{CC} (V)	LD_1	LD_2	V_{CCH} (V)	V_{GG} (V)
T_C = +25°C	+2.4	+0.4	+1.10	+1.80	-5.2	-3.2	+5.0	100 Ω to -2 V	100 Ω to GND	+7.0	+2.0
T_C = +125°C	+2.4	+0.4	+0.80	+1.80	-5.2	-3.2	+5.0	100 Ω to -2 V	100 Ω to GND	+7.0	+2.0
T_C = -55°C	+2.4	+0.4	+1.10	+2.00	-.5.2	-3.2	+5.0	100 Ω to -2 V	100 Ω to GND	+7.0	+2.0

TABLE IVA. Test conditions for group A inspection for device type 02.

Symbol	V_{IH} (V)	V_{IL} (V)	V_{ITL} (V)	V_{ITH} (V)	V_{EE} (V)	V_{BB}	V_{CC} (V)	V_{CB} (V)	V_{IHH} (V)	V_{ILH} (V)	V_{IHL} (V)	V_{ILL} (V)	V_{ILS} (V)	I_{OH} (mA)	I_{OLH} (mA)
T_C = +25°C	-0.780	-1.850	-1.475	-1.105	-5.2	Tie to V_{BB}	+5.0	-5.2	+0.220	-0.850	-1.780	-2.850	-1.690	-2.0	+12.0
T_C = +125°C	-0.630	-1.820	-1.400	-1.000	-5.2	Tie to V_{BB}	+5.0	-5.2	-0370	-0.820	-1.630	-2.820		-2.0	+12.0
T_C = -55°C	-0.880	-1.920	-1.510	-1.255	-5.2	Tie to V_{BB}	+5.0	-.5.2	+0.120	-0.920	-1.880	-2.920		-2.0	+12.0

5. PACKAGING

5.1 Packaging requirements. For acquisition purposes, the packaging requirements shall be as specified in the contract or order (see 6.2). When actual packaging of materiel is to be performed by DoD or in-house contractor personnel, these personnel need to contact the responsible packaging activity to ascertain packaging requirements. Packaging requirements are maintained by the Inventory Control Point's packaging activity within the Military Service or Defense Agency, or within the military service's system command. Packaging data retrieval is available from the managing Military Department's or Defense Agency's automated packaging files, CD-ROM products, or by contacting the responsible packaging activity.

6. NOTES

(This section contains information of a general or explanatory nature that may be helpful, but is not mandatory.)

6.1 Intended use. Microcircuits conforming to this specification are intended for original equipment design applications and logistic support of existing equipment.

6.2 Acquisition requirements. Acquisition documents should specify the following:

a. Title, number, and date of the specification.

b. PIN and compliance identifier, if applicable (see 1.2).

c. Requirements for delivery of one copy of the conformance inspection data pertinent to the device inspection lot to be supplied with each shipment by the device manufacturer, if applicable.

d. Requirements for certificate of compliance, if applicable.

e. Requirements for notification of change of product or process to contracting activity in addition to notification to the qualifying activity, if applicable.

f. Requirements for failure analysis (including required test condition of method 5003 of MIL-STD-883), corrective action, and reporting of results, if applicable.

g. Requirements for product assurance options.

h. Requirements for special carriers, lead lengths, or lead forming, if applicable. These requirements should not affect the part number. Unless otherwise specified, these requirements will not apply to direct purchase by or direct shipment to the Government.

i. Requirements for "JAN" marking.

J. Packaging requirements (see 5.1).

6.3 Superseding information. The requirements of MIL-M-38510 have been superseded to take advantage of the available Qualified Manufacturer Listing (QML) system provided by MIL-PRF-38535. Previous references to MIL-M-38510 in this document have been replaced by appropriate references to MIL-PRF-38535. All technical requirements now consist of this specification and MIL-PRF-38535. The MIL-M-38510 specification sheet number and PIN have been retained to avoid adversely impacting existing government logistics systems and contractor's parts lists.

6.4 Qualification. With respect to products requiring qualification, awards will be made only for products which are, at the time of award of contract, qualified for inclusion in Qualified Manufacturers List QML-38535 whether or not such products have actually been so listed by that date. The attention of the contractors is called to these requirements, and manufacturers are urged to arrange to have the products that they propose to offer to the Federal Government tested for qualification in order that they may be eligible to be awarded contracts or purchase orders for the products covered by this specification. Information pertaining to qualification of products may be obtained from DSCC-VQ, P.O. Box 3990, Columbus, Ohio 43218-3990.

6.5 Abbreviations, symbols, and definitions. The abbreviations, symbols, and definitions used herein are defined in MIL-PRF-38535, MIL-HDBK-1331, and as follows:

BV_{IN} ..... Input breakdown voltage.
GND ..... Ground zero voltage potential.
V_{OTH} ..... High-level threshold output voltage.
V_{OTL} ..... Low-level threshold output voltage.
V_{ITH} ..... High-level threshold input voltage.
V_{ITL} ..... Low-level threshold input voltage.
V_{EEL} ..... Shifted power supply voltage for the purpose of ac testing.
V_{OLS} ..... Input protection tests.
I_{CBO} ..... Input leakage.

6.6 Logistic support. Lead materials and finishes (see 3.3) are interchangeable. Unless otherwise specified, microcircuits acquired for Government logistic support will be acquired to device class B (see 1.2.2), lead material and finish A (see 3.3). Longer length leads and lead forming should not affect the part number.

6.7 Substitutability. The cross-reference information below is presented for the convenience of users. Microcircuits covered by this specification will functionally replace the listed generic-industry type. Generic-industry microcircuit types may not have equivalent operational performance characteristics across military temperature ranges or reliability factors equivalent to MIL-M-35810 device types and may have slight physical variations in relation to case size. The presence of this information should not be deemed as permitting substitution of generic-industry types for MIL-M-38510 types or as a waiver of any of the provisions of MIL-PRF-38535.

Military device type	Generic-industry type
01	10524
02	10525

6.8 Test limit compensation examples.

a. A device which has a power dissipation of 100 mW in case F is to be tested under a zero air flow configuration. On figure 6 ΔT_J between 500 ft/min and zero air flow is +4°C. In order to adjust the various parameter limits, use figure 7 which defines the limit adjustment coefficients for ΔT_J. To adjust V_{OH} (max) at -55°C, use the $+\Delta T_J$ column of the -55°C portion of figure 7 and locate the coefficient corresponding to V_{OH} (max). This value is 1.25 mV/°C. Multiply at the ΔT_J by the coefficient and algebraically add it the -55°C V_{OH} (max) limit from table III.

V_{OH} (max) (adjusted limit) = (+4°C X 1.25 mV/°C) + (-880 mV)
= 5 mV -880 mV = -875 mV
Use -875 mV

Follow the same procedure to adjust the remaining parameters at -55°C as well as all parameters at +25°C and +125°C.

b. A device with a power dissipation of 150 mW in case E is to be tested at an air flow of 200 linear ft/min and the 25°C testing is to be accomplished at a case temperature of +20°C. On figure 5 ΔT_J due to air flow is +3°C. The ΔT_J due to ambient temperature change is -5°C (25-20). Therefore the total ΔT_J = -5 +3 = -2°C. Using figure 7, find the +25°C, $-\Delta T_J$ column. To adjust V_{OL} (max) locate the limit coefficient corresponding to V_{OL} (max) for a negative ΔT_J, this value is 0.44 mV/°C. Multiply the ΔT_J by the coefficient and algebraically add it to the +25°C V_{OL} (max) limit from table III.

V_{OL} (max) (adjusted limit) = (-2°C) X (0.44 mV/°C) + (-1620 mV)
= -.88 mV - 1620 mV = -1620.88 mV
Use -1621 mV

Follow the same procedure to adjust the remaining parameters at +25°C.

6.9 Changes from previous issue. The margins of this specification are marked with vertical lines to indicate where changes from the previous issue were made. This was done as a convenience only and the Government assumes no liability whatsoever for any inaccuracies in these notations. Bidders and contractors are cautioned to evaluate the requirements of this document based on the entire content irrespective of the marginal notations and relationship; to the last previous issue.

Custodians:
Army - CR
Navy - EC
Air Force - 11
DLA - CC

Preparing activity:
DLA - CC

(Project 5962-2006-011)

Review activities:
Army - MI, SM
Navy - AS, CG, MC, SH, TD
Air Force - 03, 19, 99

NOTE: The activities listed above were interested in this document as of the date of this document. Since organizations and responsibilities can change, you should verify the currency of the information above using the ASSIST Online database at http://assist.daps.dla.mil.