INCH-POUND

MIL-M-38510/60B
8 December 2004
SUPERSEDING
MIL-M-38510/60A
5 August 1985

MILITARY SPECIFICATION

MICROCIRCUITS, DIGITAL, ECL, MULTIPLE NOR GATES, MONOLITHIC SILICON

Inactive for new design after 8 July 1997.

This specification is approved for use by all Departments and Agencies of the Department of Defense.

The requirements for acquiring the product herein shall consist of this specification sheet and MIL-PRF 38535.

1. SCOPE

1.1 Scope. This specification covers the detail requirements for monolithic silicon, ECL, logic gating microcircuits. Two product assurance classes and a choice of case outlines and lead finishes are provided for each type and are reflected in the complete part number. For this product, the requirements of MIL-M-38510 have been superseded by MIL-PRF-38535, (see 6.3).

1.2 Part or Identifying Number (PIN). The PIN is in accordance with MIL-PRF-38535, and as specified herein.

1.2.1 Device types. The device types are as follows:

Device type	Circuit
01	Quad OR/NOR gate with strobe
02	Triple NOR gate, single OR/NOR gate
03	Triple 2-3-2 OR/NOR gate
04	Triple 3-4-3 NOR gate
05	Triple exclusive OR/NOR gate
06	Dual 4-5 OR/NOR gate

1.2.2 Device class. The device class is the product assurance level as defined in MIL-PRF-38535.

1.2.3 Case outlines. The case outlines are as designated in MIL-STD-1835 and as follows:

Outline letter	Descriptive designator	Terminals	Package style
E	GDIP1-T16 or CDIP2-T16	16	Dual-in-line
F	GDFP2-F16 or CDFP3-F16	16	Flat
2	CQCC1-N20	20	Square chip carrier

Comments, suggestions, or questions on this document should be addressed to: Commander, Defense Supply Center, Columbus, ATTN: DSCC-VAS, P.O. Box 3990, Columbus, OH 43218-3990, or emailed to bipolar@dla.mil . Since contact information can change, you may want to verify the currency of this address information using the ASSIST Online database at http://assist.daps.dla.mil .

AMSC N/A FSC 5962

1.3 Absolute maximum ratings.

Supply voltage range	0 V dc to -7.0 V dc
Input voltage range	0 V dc to –5.2 V dc
Storage temperature range	-65° to +150°C
Maximum power dissipation, (P_D) 1/	55 mW
Lead temperature (soldering, 10 seconds)	+260°C
Junction temperature (T_J) 2/	165°C
Maximum output current	-50 mA
Thermal resistance, junction to case (θ_{JC}):	
Cases E, F, and 2	(See MIL-STD-1835)

1.4 Recommended operating conditions.

Supply voltage (V_{EE})	-5.46 V minimum to –4.94 V maximum
Minimum high level input voltage	-1.105 V at T_C = 25°C
(at 500 linear feet per minute) (ft/min)	-1.000 V at T_C = 125°C
	-1.255 V at T_C = -55°C
Maximum low level input voltage	-1.475 V at T_C = 25°C
(at 500 linear ft/min)	-1.400 V at T_C = 125°C
	-1.510 V at T_C = -55°C
Normalized fanout (each output)	10 3/
Operating temperature range (T_C) (at 500 linear ft/min)	-55° to +125°C

2. APPLICABLE DOCUMENTS

2.1 General. The documents listed in this section are specified in sections 3, 4, or 5 of this specification. This section does not include documents cited in other sections of this specification or recommended for additional information or as examples. While every effort has been made to ensure the completeness of this list, document users are cautioned that they must meet all specified requirements of documents cited in sections 3, 4, or 5 of this specification, whether or not they are listed.

2.2 Government documents.

2.2.1 Specifications and Standards. The following specifications and standards form a part of this specification to the extent specified herein. Unless otherwise specified, the issues of these documents are those cited in the solicitation or contract.

DEPARTMENT OF DEFENSE SPECIFICATIONS

MIL-PRF-38535 - Integrated Circuits (Microcircuits) Manufacturing, General Specification for.

1/ Must withstand the added P_D due to short-circuit test (e.g., I_{OS}).
2/ Maximum junction temperature should not be exceeded except in accordance with allowable short duration burn-in screening condition in accordance with MIL-PRF-38535.
3/ Device will fanout in both high and low levels to the specified number of data inputs on the same device type as that being tested.

DEPARTMENT OF DEFENSE STANDARDS

MIL-STD-883 - Test Method Standard for Microelectronics.
MIL-STD-1835 - Interface Standard Electronic Component Case Outlines

(Copies of these documents are available online at http://assist.daps.dla.mil/quicksearch/ or http://assist.daps.dla.mil or from the Standardization Document Order Desk, 700 Robbins Avenue, Building 4D, Philadelphia, PA 19111-5094.)

2.3 Order of precedence. In the event of a conflict between the text of this specification and the references cited herein, the text of this document takes precedence. Nothing in this document, however, supersedes applicable laws and regulations unless a specific exemption has been obtained.

3. REQUIREMENTS

3.1 Qualification. Microcircuits furnished under this specification shall be products that are manufactured by a manufacturer authorized by the qualifying activity for listing on the applicable qualified manufacturers list before contract award (see 4.3 and 6.4).

3.2 Item requirements. The individual item requirements shall be in accordance with MIL-PRF-38535 and as specified herein or as modified in the device manufacturer's Quality Management (QM) plan. The modification in the QM plan shall not affect the form, fit, or function as described herein.

3.3 Design, construction, and physical dimensions. The design, construction, and physical dimensions shall be as specified in MIL-PRF-38535 and herein.

3.3.1 Terminal connections and logic diagrams. The terminal connections and logic diagrams shall be as specified on figure 1.

3.3.2 Truth tables and logic equations. The truth tables and logic equations shall be as specified on figure 2.

3.3.3 Schematic circuits. The schematic circuits shall be maintained by the manufacturer and made available to the qualifying activity and the preparing activity upon request.

3.3.4 Case outlines. Case outlines shall be in accordance with 1.2.3.

3.4 Lead material and finish. Lead material and finish shall be in accordance with MIL-PRF-38535 (see 6.6).

3.5 Electrical performance characteristics. The electrical performance characteristics are as specified and table I and apply over the full recommended case operating range unless otherwise specified.

TABLE I. Electrical performance characteristics.
(Limits are valid provided circuit is in a test socket and transverse air flow of 500 linear ft/min is maintained.)

Test	Symbol	Conditions $-55°C \le T_C \le +125°C$				Device types	Limits Min	Limits Max	Unit
			T_C	V_{IH1}	V_{IL1}				
High level output voltage	V_{OH}	V_{EE} = -5.2 V,	25°C	-0.780 V	-1.850 V	All	-0.930	-0.780	V
		V_{CC} = 0 V,	125°C	-0.630 V	-1.820 V		-0.825	-0.630	
		Load = 100Ω to –2V	-55°C	-0.880 V	-1.920 V		-1.080	-0.880	
			T_C	V_{IH1}	V_{IL1}				
Low level output voltage	V_{OL}	V_{EE} = -5.2 V,	25°C	-0.780 V	-1.850 V	All	-1.850	-1.620	V
		V_{CC} = 0 V,	125°C	-0.630 V	-1.820 V		-1.820	-1.545	
		Load = 100Ω to –2V	-55°C	-0.880 V	-1.920 V		-1.920	-1.655	
			T_C	V_{ITH}	V_{ITL}				
High level threshold output voltage	V_{OTH}	V_{EE} = -5.2 V,	25°C	-1.105 V	-1.475 V	All	-0.950	- - -	V
		V_{CC} = 0 V,	125°C	-1.000 V	-1.400 V		-0.845	- - -	
		Load = 100Ω to –2V	-55°C	-1.255 V	-1.510 V		-1.100	- - -	
			T_C	V_{ITH}	V_{ITL}				
Low level threshold output voltage	V_{OTL}	V_{EE} = -5.2 V,	25°C	-1.105 V	-1.475 V	All	- - -	-1.600	V
		V_{CC} = 0 V,	125°C	-1.000 V	-1.400 V		- - -	-1.525	
		Load = 100Ω to –2V	-55°C	-1.255 V	-1.510 V		- - -	-1.635	
Power supply drain current	I_{EE}	V_{EE} = -5.2 V,				01, 02	-29		mA
		V_{CC} = 0 V				03, 04	-24		
						05	-31		
						06	-16		
High level input current	I_{IH1}	V_{EE} = -5.2 V, V_{CC} = 0 V,				All	- - -	450 1/	μA
		V_{IH1} = -0.780 V at 25°C, -0.630 V at 125°C,					- - -		
	I_{IH2}	-0.880 V at -55°C				01	- - -	935 2/	μA
						05	- - -	375	
Low level input current	I_{IL}	V_{EE} = -5.2 V, V_{CC} = 0 V,				All	0.3		μA
		V_{IL1} = -1.850 V at 25°C, -1.820 V at 125°C,							
		-1.920 V at -55°C							

See footnotes at end of table.

TABLE I. Electrical performance characteristics – Continued.

Test	Symbol	Conditions $-55°C \leq T_C \leq +125°C$	Device types	Limits Min	Limits Max	Unit
Transition time, low to high level	t_{TLH}	V_{EEL} = -3.2 V, V_{CC} = +2.0 V, $\frac{RL}{2}$ = 50Ω, CL ≤ 5 pF (output under test) Load = 100Ω to GND (outputs not under test) Device type 05 only : V_{IH2} = +1.11 V V_{IL2} = +0.31 V	01, 02, 03, 04, 06	1.0	4.0	ns
			05	1.0	4.3	ns
Transition time, high to low level	t_{THL}		01, 02, 03, 04, 06	1.0	4.0	ns
			05	1.0	4.3	ns
Propagation delay time, low to high level	t_{PLH}		01, 02, 03, 04, 06	1.0	3.7	ns
			05	1.0	4.5	ns
Propagation delay time, high to low level	t_{PHL}		01, 02, 03, 04, 06	1.0	3.7	ns
			05	1.0	4.5	ns

Notes apply to device types 01-05 only.

1/ Not applicable to "B" inputs of device types 01 and 05.
2/ Applicable to "B" inputs only.

3.6 Electrical test requirements. The electrical test requirements for each device class shall be the subgroups specified in table II. The electrical tests for each subgroup are described in table III.

TABLE II. Electrical test requirements.

MIL-PRF-38535 test requirements	Subgroups (see table III)	
	Class S devices	Class B devices
Interim electrical parameters	1	1
Final electrical test parameters	1*, 2, 3, 9	1*, 2, 3, 9
Group A test requirements	1, 2, 3, 9, 10, 11	1, 2, 3, 9, 10, 11
Group B electrical test parameters when using the method 5005 QCI option	1, 2, 3	N/A
Group C end-point electrical parameters	1, 2, 3	1, 2, 3
Group D end-point electrical parameters	1, 2, 3	1, 2, 3

*PDA applies to subgroup 1.

3.7 Marking. Marking shall be in accordance with MIL-PRF-38535.

3.8 Microcircuit group assignment. The devices covered by this specification shall be in microcircuit group number 8 see MIL-PRF-38535, appendix A).

4. VERIFICATION

4.1 Sampling and inspection. Sampling and inspection procedures shall be in accordance with MIL-PRF-38535 or as modified in the device manufacturer's Quality Management (QM) plan. The modification in the QM plan shall not effect the form, fit, or function as described herein.

4.2 Screening. Screening shall be in accordance with MIL-PRF-38535 and shall be conducted on all devices prior to qualification and quality conformance inspection. The following additional criteria shall apply:

a. The burn-in test duration, test condition, and test temperature, or approved alternatives shall be as specified in the device manufacturer's QM plan in accordance with MIL-PRF-38535. The burn-in test circuit shall be maintained under document control by the device manufacturer's Technology Review Board (TRB) in accordance with MIL-PRF-38535 and shall be made available to the acquiring or preparing activity upon request. The test circuit shall specify the inputs, outputs, biases, and power dissipation, as applicable, in accordance with the intent specified in test method 1015 of MIL-STD-883.

b. Interim and final electrical test parameters shall be as specified in table II, except interim electrical parameters test prior to burn-in is optional at the discretion of the manufacturer.

c. Additional screening for space level product shall be as specified in MIL-PRF-38535.

4.3 Qualification inspection. Qualification inspection shall be in accordance with MIL-PRF-38535.

4.4 Technology Conformance inspection (TCI). Technology conformance inspection shall be in accordance with MIL-PRF-38535 and herein for groups A, B, C, and D inspections (see 4.4.1 through 4.4.4).

4.4.1 Group A inspection. Group A inspection shall be in accordance with table III of MIL-PRF-38535 and as follows:

a. Tests shall be as specified in table II herein.

b. Subgroups 4, 5, 6, 7, and 8 shall be omitted.

4.4.2 Group B inspection. Group B inspection shall be in accordance with table II MIL-PRF-38535.

4.4.3 Group C inspection. Group C inspection shall be in accordance with table IV of MIL-PRF-38535 and as follows:

a. End-point electrical parameters shall be as specified in table II herein.

b. The steady-state life test duration, test condition, and test temperature, or approved alternatives shall be as specified in the device manufacturer's QM plan in accordance with MIL-PRF-38535. The burn-in test circuit shall be maintained under document control by the device manufacturer's Technology Review Board (TRB) in accordance with MIL-PRF-38535 and shall be made available to the acquiring or preparing activity upon request. The test circuit shall specify the inputs, outputs, biases, and power dissipation, as applicable, in accordance with the intent specified in test method 1005 of MIL-STD-883.

4.4.4 Group D inspection. Group D inspection shall be in accordance with table V of MIL-PRF-38535. End-point electrical parameters shall be as specified in table II herein.

4.5 Methods of inspection. Methods of inspection shall be as specified and as follows:

4.5.1 Voltage and current. All voltages given are referenced to the microcircuit ground terminal. Currents given are conventional and positive when flowing into the referenced terminal.

TABLE IIIA. Test conditions for all devices, group A inspection

Symbol	V_{IH1} (V)	V_{IL1} (V)	V_{IH2} (V)	V_{IL2} (V)	V_{ITL} (V)	V_{ITH} (V)	E_1 (V)	E_2 (V)	E_3 (V)	LD_1	LD_2	IN / OUT
T_C = 25°C	-0.780	-1.850	+1.11	+0.31	-1.475	-1.105	-5.2	-3.2	+2.0	100Ω to -2 V	100Ω to GND	See Fig 3
T_C = 125°C	-0.630	-1.820	+1.24	+0.36	-1.400	-1.000	-5.2	-3.2	+2.0	100Ω to -2 V	100Ω to GND	See Fig 3
T_C = -55°C	-0.880	-1.920	+1.01	+0.28	-1.510	-1.255	-5.2	-3.2	+2.0	100Ω to -2 V	100Ω to GND	See Fig 3

DEVICE TYPE 01

CASE F

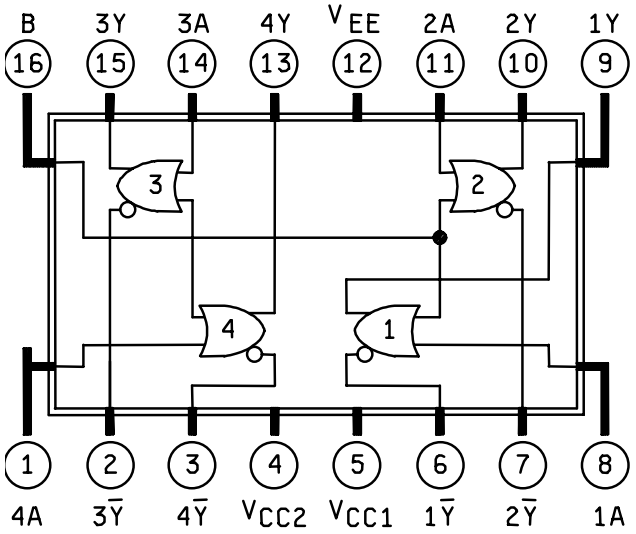

CASE E

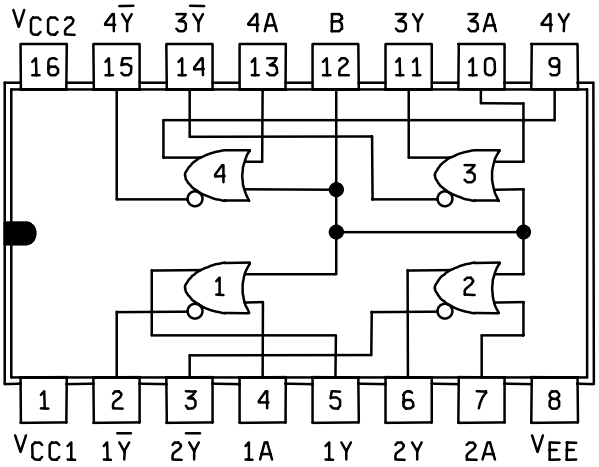

DEVICE TYPE 02

CASE F

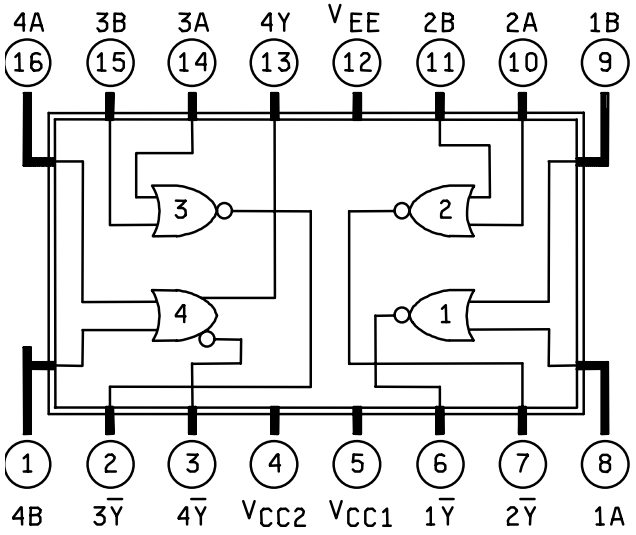

CASE E

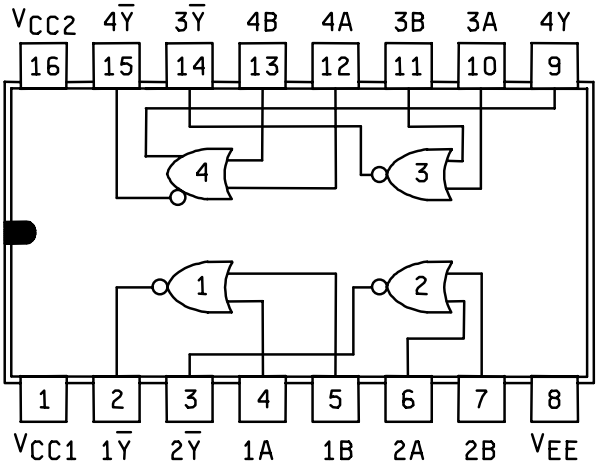

FIGURE 1. Terminal connections and logic diagrams.

DEVICE TYPE 03

CASE F

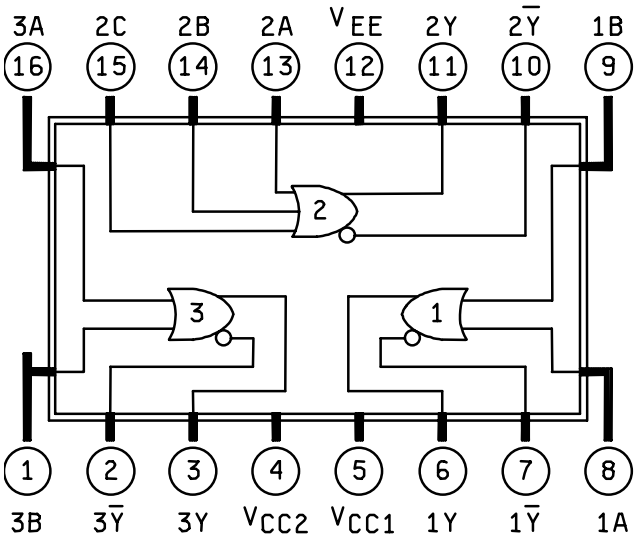

CASE E

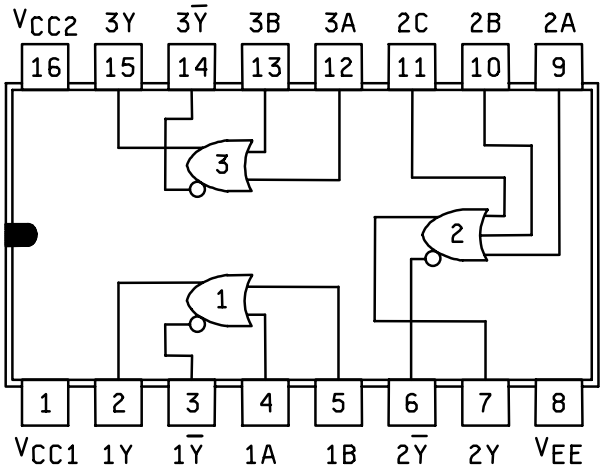

DEVICE TYPE 04

CASE F

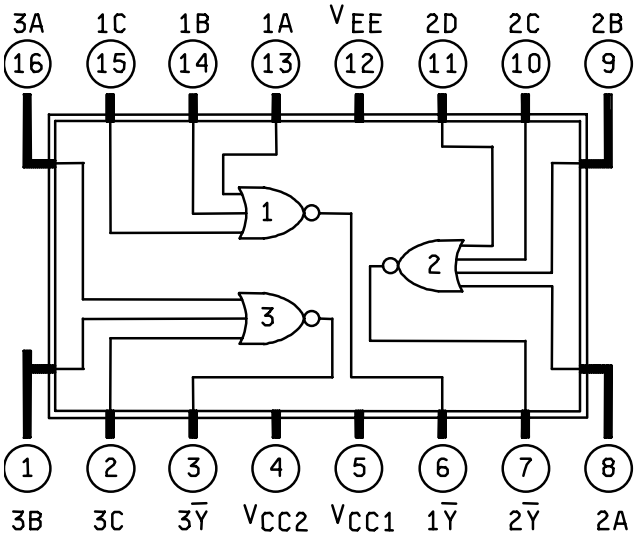

CASE E

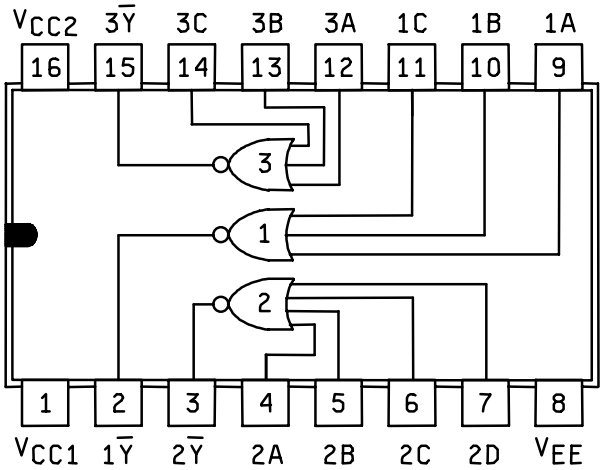

FIGURE 1. Terminal connections and logic diagrams - Continued.

DEVICE TYPE 05

CASE F

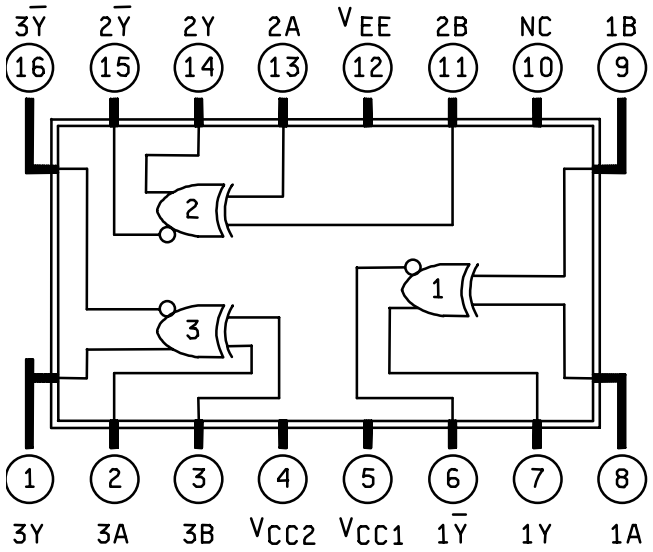

CASE E

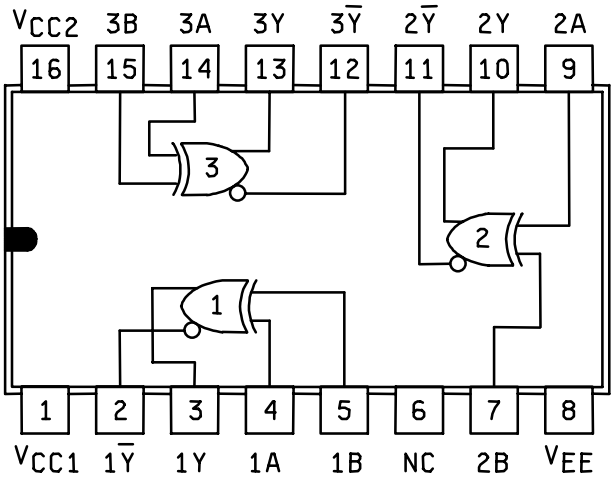

DEVICE TYPE 06

CASE F

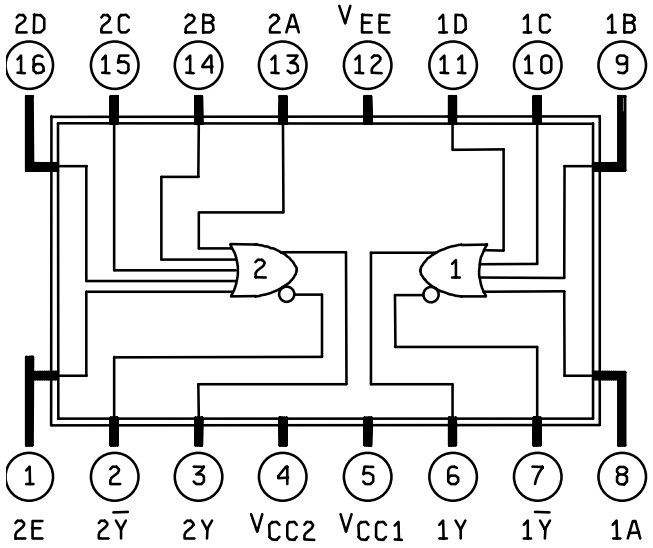

CASE E

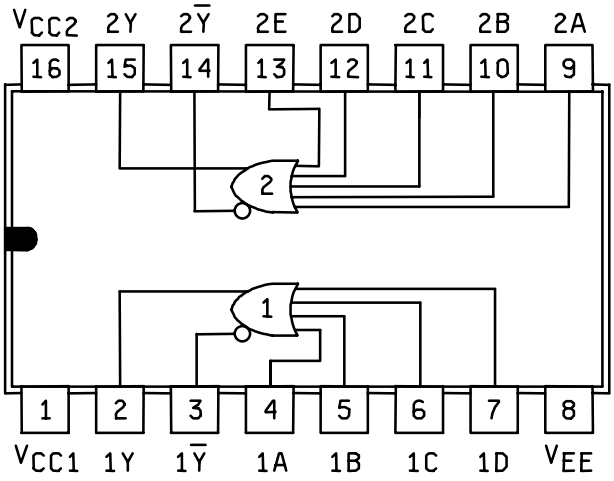

FIGURE 1. Terminal connections and logic diagrams - Continued.

DEVICE TYPE 01

CASE 2

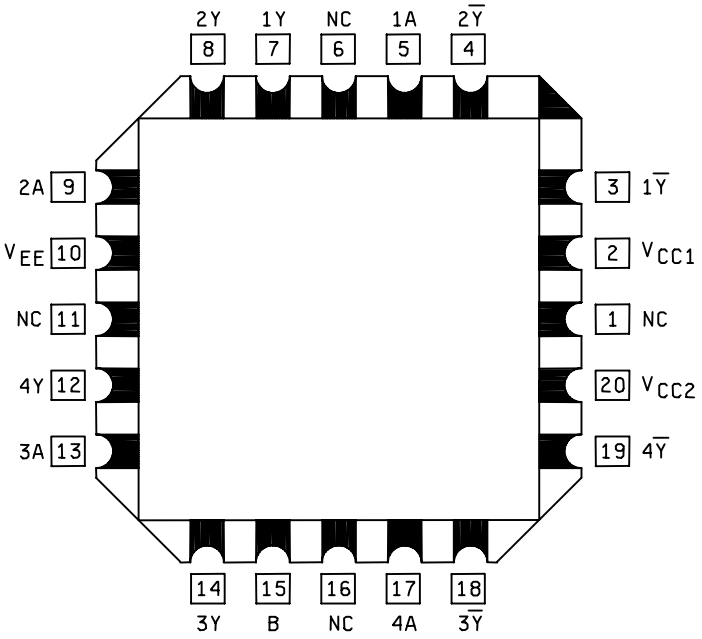

DEVICE TYPE 02

CASE 2

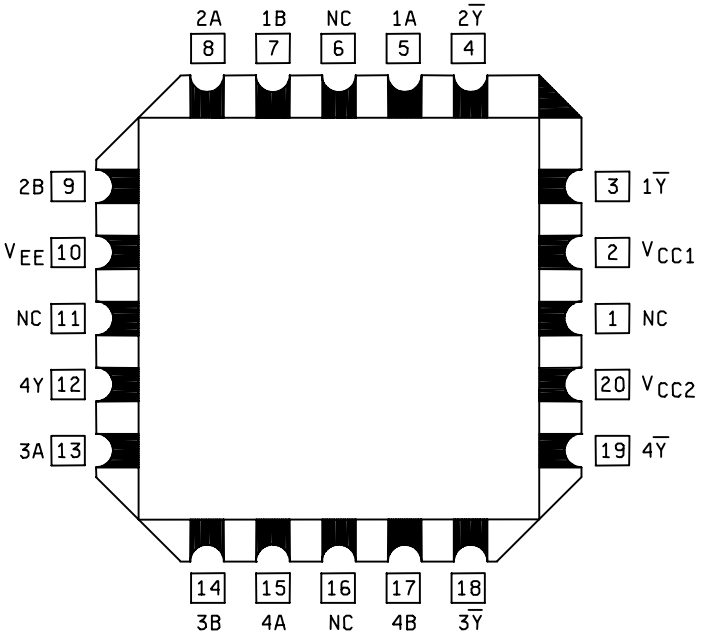

FIGURE 1. Terminal connections and logic diagrams - Continued.

DEVICE TYPE 03

CASE 2

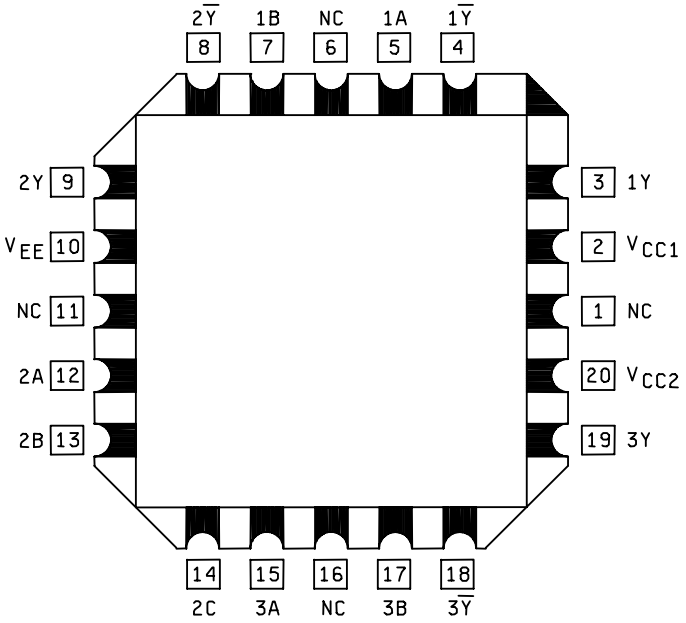

DEVICE TYPE 04

CASE 2

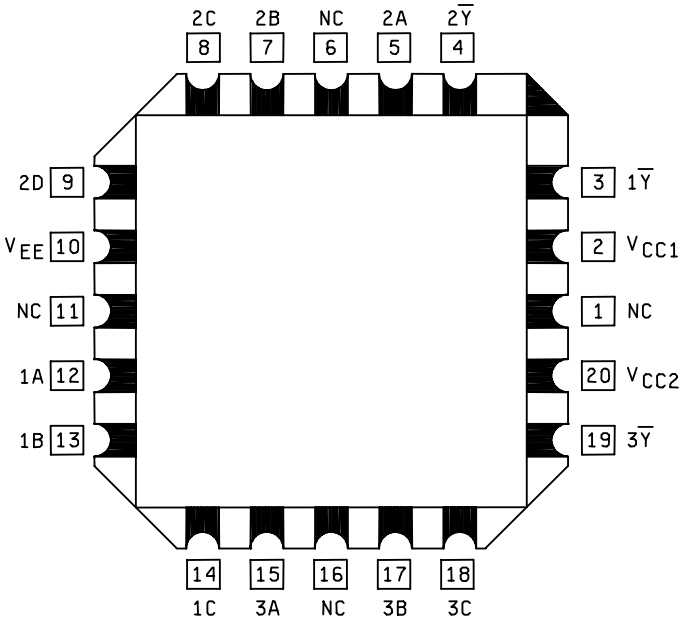

FIGURE 1. Terminal connections and logic diagrams - Continued.

DEVICE TYPE 05

CASE 2

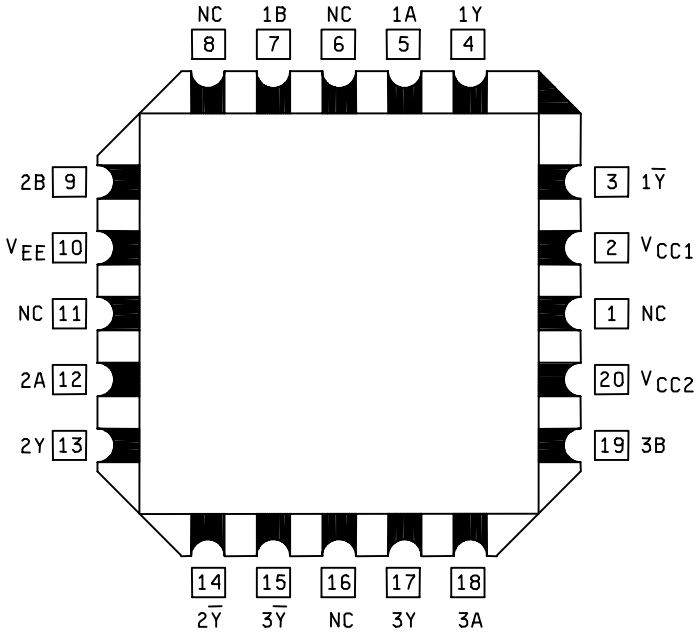

DEVICE TYPE 06

CASE 2

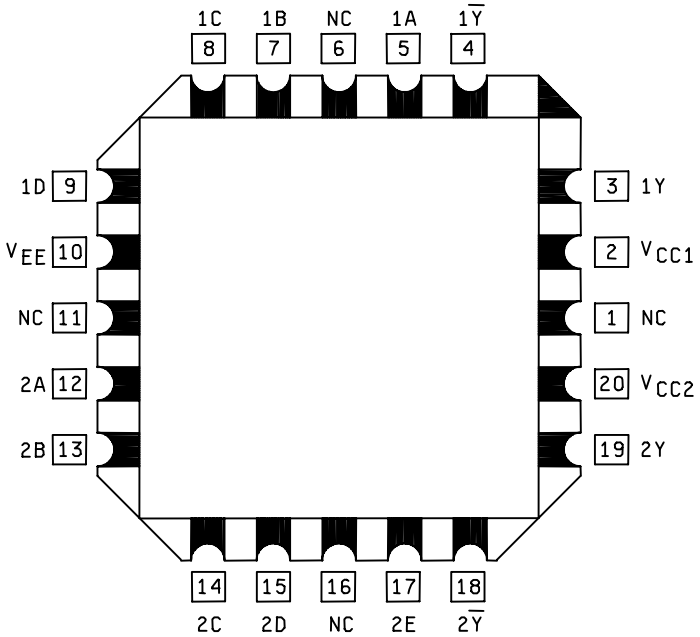

FIGURE 1. Terminal connections and logic diagrams - Continued.

Device type 01
Truth Table (EACH GATE)

INPUTS		OUTPUTS	
A	B	Y	$\overline{Y}$
L	L	L	H
H	X	H	L
X	H	H	L

H = High level
L = Low level
X = Irrelevent
Positive logic:
$Y = A + B$
$\overline{Y} = \overline{A + B}$

Device type 02
Truth Table (EACH GATE)

INPUTS		OUTPUTS	
A	B	Y↑	$\overline{Y}$
L	L	L	H
H	X	H	L
X	H	H	L

H = High level
L = Low level
X = Irrelevent
↑ Y output is applicable for Gate 4 only.
Positive logic:
$Y = A + B\uparrow$
$\overline{Y} = \overline{A + B}$

Device type 03
Truth Table (EACH GATE)

INPUTS			OUTPUTS	
A	B	C↑	Y	$\overline{Y}$
L	L	L	L	H
H	X	X	H	L
X	H	X	H	L
X	X	H	H	L

H = High level
L = Low level
X = Irrelevent
↑ C input and last line are applicable for Gate 2 only
Positive logic: $Y = A + B + C\uparrow$
$\overline{Y} = \overline{A + B + C}\uparrow$

Device type 04
Truth Table (EACH GATE)

INPUTS				OUTPUTS
A	B	C	D↑	$\overline{Y}$
L	L	L	L	H
H	X	X	X	L
X	H	X	X	L
X	X	H	X	L
X	X	X	H	L

H = High level
L = Low level
X = Irrelevent
↑ D input and last line are applicable for Gate 2 only
Positive logic: $Y = \overline{A + B + C + D}\uparrow$

Device type 05
Truth Table (EACH GATE)

INPUTS		OUTPUTS	
A	B	Y	$\overline{Y}$
L	L	L	H
H	L	H	L
L	H	H	L
H	H	L	H

H = High level
L = Low level
Positive logic:
$Y = A\overline{B} + \overline{A}B$
$\overline{Y} = AB + \overline{AB}$

Device type 06
Truth Table (EACH GATE)

INPUTS					OUTPUTS	
A	B	C	D	E↑	Y	$\overline{Y}$
L	L	L	L	L	L	H
H	X	X	X	X	H	L
X	H	X	X	X	H	L
X	X	H	X	X	H	L
X	X	X	H	X	H	L
X	X	X	X	H	H	L

H = High level
L = Low level
X = Irrelevent
↑ E input and last line are applicable for Gate 2 only.
Positive logic:
$Y = A + B + C + D + E\uparrow$
$\overline{Y} = \overline{A + B + C + D + E}\uparrow$

FIGURE 2. Truth tables.

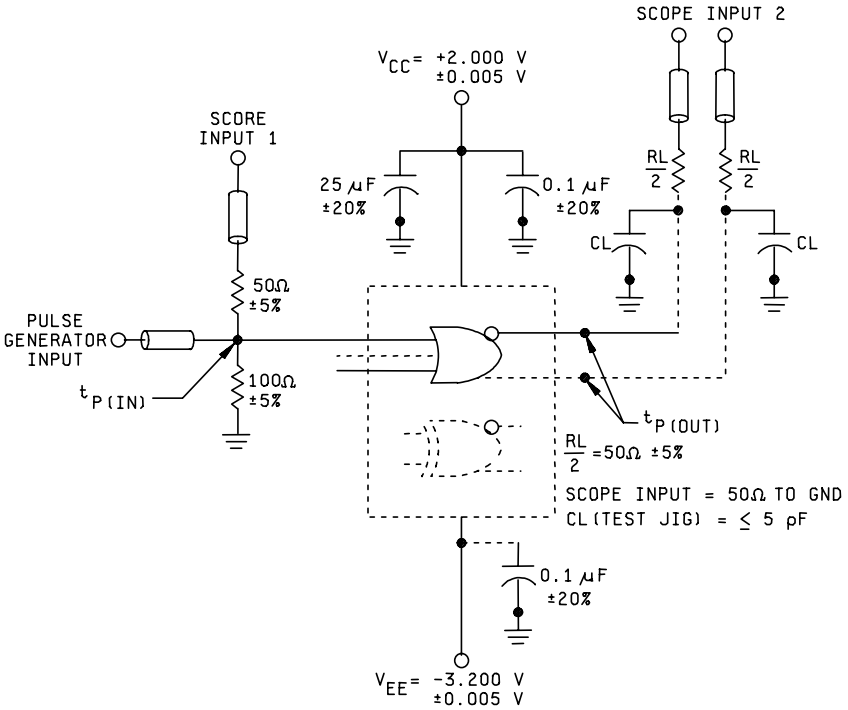

T_C	V_{IH2} ±10 mV	V_{IL2} ±10 mV
25°C	+1.11 V	+0.31 V
125°C	+1.24 V	+0.36 V
-55°C	+1.01 V	+0.28 V

t_p = 40 ns ± 1 ns
Z_{OUT} ≈ 50Ω
t_{THL} = 2.0 ns (20%-80%) ± 0.2 ns
t_{TLH} = 2.0 ns (20%-80%) ± 0.2 ns
PRR = 1.00 MHz ± 0.05 MHz

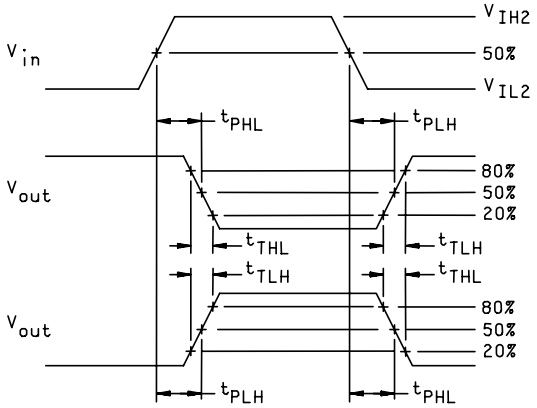

NOTES:

1. Perform test in accordance with test table; each output is tested separately.
2. All input and output cables are equal lengths of 50 ohm coaxial cables. Wire length should be ≤ .250 (6.35 mm) from $t_{p\ (IN)}$ to input pin and $t_{p\ (OUT)}$ to output pin.
3. Outputs not under test connected to a 100 ohm resistor to ground.

FIGURE 3. Switching time test circuit and waveforms.

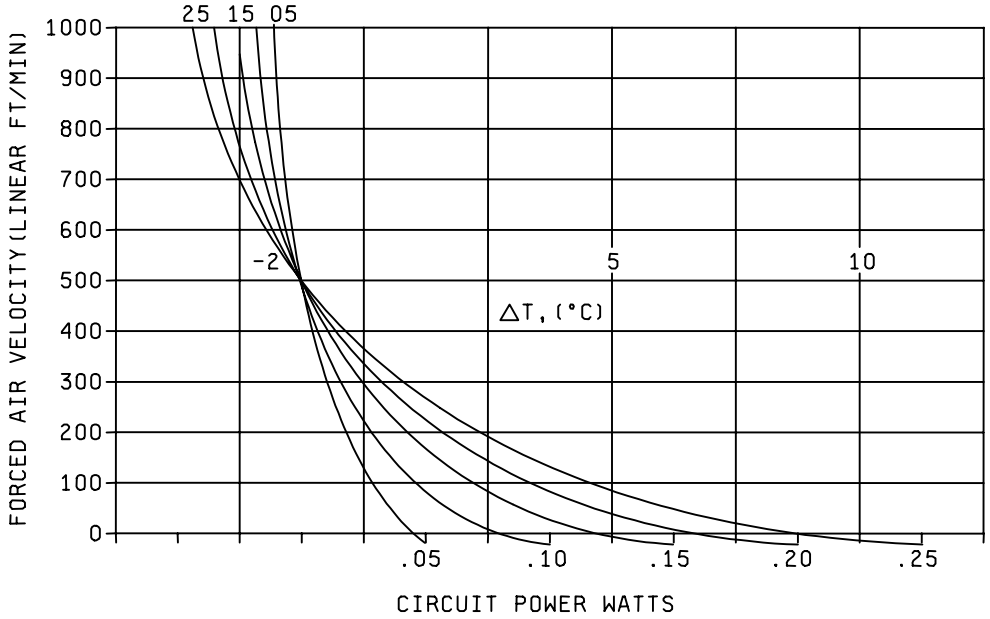

NOTE: Change in junction temperature versus forced air velocity, ref. to 500 linear ft./min. circuit power as variable parameter 100Ω load.

FIGURE 4. Junction temperature versus air velocity case E.

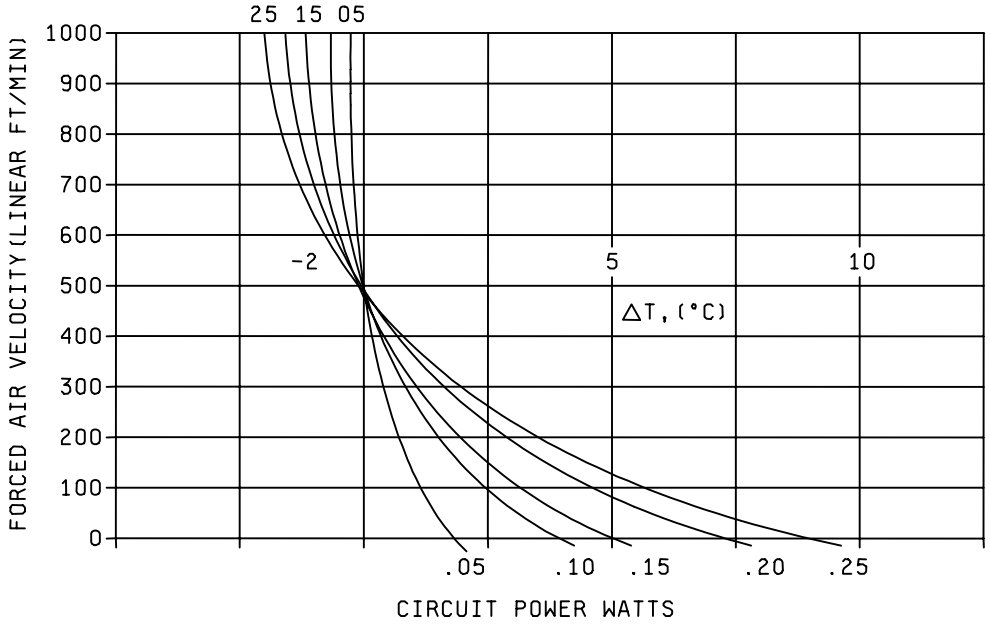

NOTE: Change in junction temperature versus forced air velocity, ref. to 500 linear ft./min. circuit power as variable parameter 100Ω load.

FIGURE 5. Junction temperature versus air velocity case F.

	-55°C (mV/°C)		+25°C (mV/°C)		+125°C (mV/°C)	
Parameter	$+\Delta T_J$	$-\Delta T_J$	$+\Delta T_J$	$-\Delta T_J$	$+\Delta T_J$	$-\Delta T_J$
V_{OH} max, V_{IH}	1.38	1.38	1.40	1.38	1.40	1.40
V_{OH} min, V_{OTH}	1.88	1.88	1.05	1.88	1.05	1.05
V_{OL} max, V_{OTL}	0.44	0.44	0.75	0.44	0.75	0.75
V_{OL} min, V_{IL}	0.88	0.88	0.30	0.88	0.30	0.30
V_{ITH}	1.88	1.88	1.05	1.88	1.05	1.05
V_{ITL}	0.44	0.44	0.75	0.44	0.75	0.75

FIGURE 6. Adjustment coefficients for forcing function and test limit compensation.

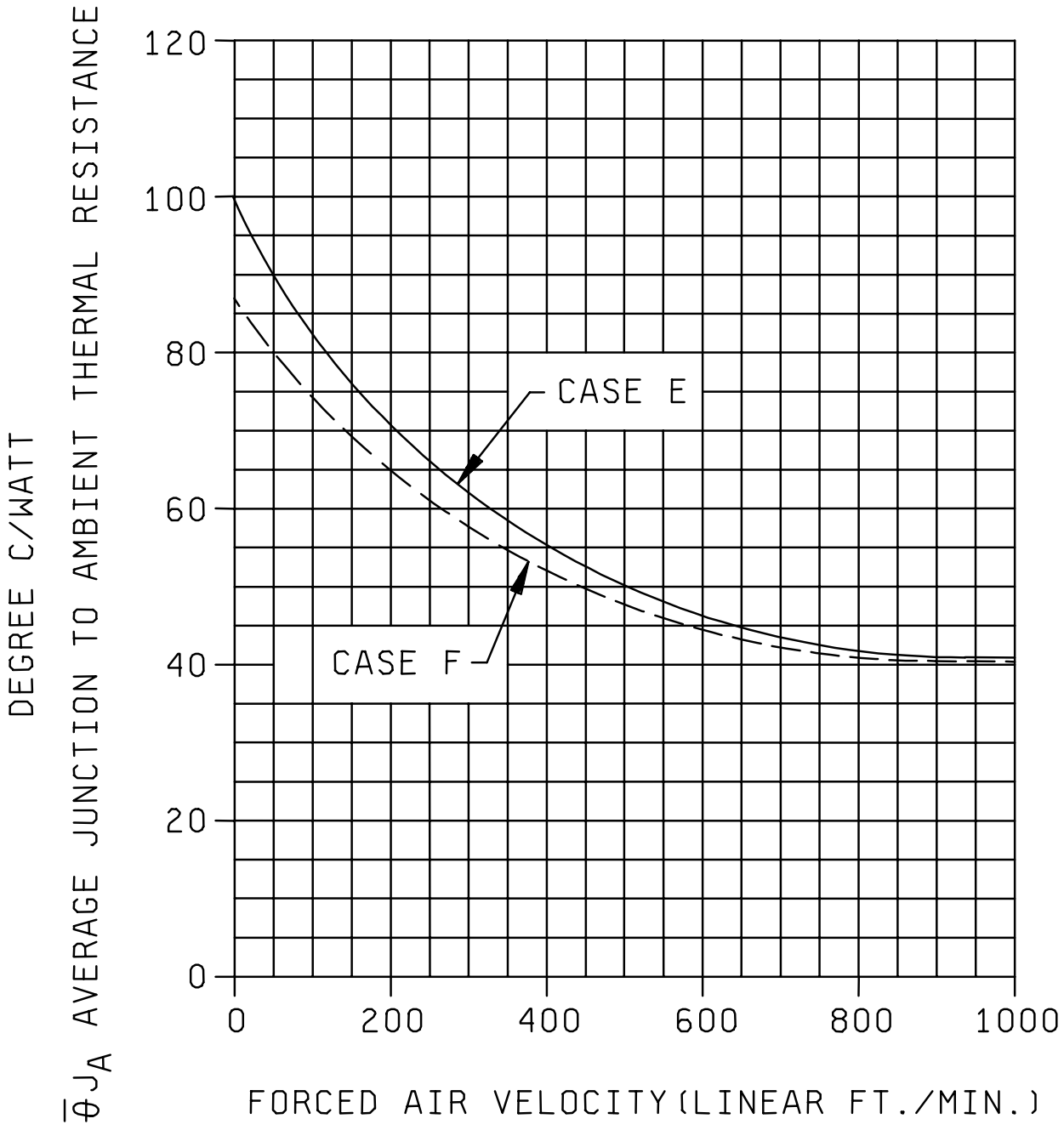

Note: (θJ_A – vs – Forced air velocity) for case (E) and (F).
$T_J = T_C + \theta J_A \times P_D$ (max).

FIGURE 7. Air velocity versus thermal resistance.

TABLE III. Group A inspection for device type 01.
For terminal conditions see table IIIA. Terminals not designated are open.

Subgroup	Symbol	MIL-STD-883 method	Case E	1	2	3	4	5	6	7	8	9	10	11	12	13	14	15	16	Measured terminal	Limits		Unit
			Case F	5	6	7	8	9	10	11	12	13	14	15	16	1	2	3	4				
			Case 2	2	3	4	5	7	8	9	10	12	13	14	15	17	18	19	20				
			Test no.	V_{CC1}	$1\overline{Y}$	$2\overline{Y}$	1A	1Y	2Y	2A	V_{EE}	4Y	3A	3Y	B	4A	$3\overline{Y}$	$4\overline{Y}$	V_{CC2}		Min	Max	
1 Tc = 25°C	V_{OH}	3006	1	GND	LD_1	LD_1		LD_1	LD_1		E_1	LD_1		LD_1	V_{IH1}		LD_1	LD_1	GND	1Y	-0.93	-0.78	V
		"	2	"	"	"		"	"		"	"		"	"		"	"	"	2Y	"	"	"
		"	3	"	"	"		"	"		"	"		"	"		"	"	"	3Y	"	"	"
		"	4	"	"	"		"	"		"	"		"	"		"	"	"	4Y	"	"	"
		"	5	"	"	"		"	"		"	"		"	V_{IL1}		"	"	"	$1\overline{Y}$	"	"	"
		"	6	"	"	"		"	"		"	"		"	"		"	"	"	$2\overline{Y}$	"	"	"
		"	7	"	"	"		"	"		"	"		"	"		"	"	"	$3\overline{Y}$	"	"	"
		"	8	"	"	"		"	"		"	"		"	"		"	"	"	$4\overline{Y}$	"	"	"
		"	9	"	"	"	V_{IL1}	"	"		"	"		"			"	"	"	$1\overline{Y}$	"	"	"
		"	10	"	"	"		"	"	V_{IL1}	"	"		"			"	"	"	$2\overline{Y}$	"	"	"
		"	11	"	"	"		"	"		"	"	V_{IL1}	"			"	"	"	$3\overline{Y}$	"	"	"
		"	12	"	"	"		"	"		"	"		"		V_{IL1}	"	"	"	$4\overline{Y}$	"	"	"
		"	13	"	"	"	V_{IH1}	"	"		"	"		"			"	"	"	1Y	"	"	"
		"	14	"	"	"		"	"	V_{IH1}	"	"		"			"	"	"	2Y	"	"	"
		"	15	"	"	"		"	"		"	"	V_{IH1}	"			"	"	"	3Y	"	"	"
		"	16	"	"	"		"	"		"	"		"		V_{IH1}	"	"	"	4Y	"	"	"
2		Same tests and terminal conditions as for subgroup 1, except Tc = 125°C and limits as shown.																			-0.825	-0.63	V
3		Same tests and terminal conditions as for subgroup 1, except Tc = -55°C and limits as shown.																			-1.08	-0.88	V
	V_{OL}	3007	17	GND	LD_1	LD_1		LD_1	LD_1		E_1	LD_1		LD_1	V_{IH1}		LD_1	LD_1	GND	$1\overline{Y}$	-1.85	-1.62	V
		"	18	"	"	"		"	"		"	"		"	"		"	"	"	$2\overline{Y}$	"	"	"
		"	19	"	"	"		"	"		"	"		"	"		"	"	"	$3\overline{Y}$	"	"	"
		"	20	"	"	"		"	"		"	"		"	"		"	"	"	$4\overline{Y}$	"	"	"
		"	21	"	"	"		"	"		"	"		"	V_{IL1}		"	"	"	1Y	"	"	"
		"	22	"	"	"		"	"		"	"		"	"		"	"	"	2Y	"	"	"
		"	23	"	"	"		"	"		"	"		"	"		"	"	"	3Y	"	"	"
		"	24	"	"	"		"	"		"	"		"	"		"	"	"	4Y	"	"	"
		"	25	"	"	"	V_{IL1}	"	"		"	"		"			"	"	"	1Y	"	"	"
		"	26	"	"	"		"	"	V_{IL1}	"	"		"			"	"	"	2Y	"	"	"
		"	27	"	"	"		"	"		"	"	V_{IL1}	"			"	"	"	3Y	"	"	"
		"	28	"	"	"		"	"		"	"		"		V_{IL1}	"	"	"	4Y	"	"	"
		"	29	"	"	"	V_{IH1}	"	"		"	"		"			"	"	"	$1\overline{Y}$	"	"	"
		"	30	"	"	"		"	"	V_{IH1}	"	"		"			"	"	"	$2\overline{Y}$	"	"	"
		"	31	"	"	"		"	"		"	"	V_{IH1}	"			"	"	"	$3\overline{Y}$	"	"	"
		"	32	"	"	"		"	"		"	"		"		V_{IH1}	"	"	"	$4\overline{Y}$	"	"	"
2		Same tests and terminal conditions as for subgroup 1, except Tc = 125°C and limits as shown.																			-1.82	-1.545	V
3		Same tests and terminal conditions as for subgroup 1, except Tc = -55°C and limits as shown.																			-1.92	-1.655	V
	V_{OTH}		33	GND	LD_1	LD_1		LD_1	LD_1		E_1	LD_1		LD_1	V_{ITL}		LD_1	LD_1	GND	$1\overline{Y}$	-0.95		"
			34	"	"	"		"	"		"	"		"	"		"	"	"	$2\overline{Y}$	"		"
			35	"	"	"		"	"		"	"		"	"		"	"	"	$3\overline{Y}$	"		"
			36	"	"	"		"	"		"	"		"	"		"	"	"	$4\overline{Y}$	"		"
			37	"	"	"		"	"		"	"		"	V_{ITH}		"	"	"	1Y	"		"
			38	"	"	"		"	"		"	"		"	"		"	"	"	2Y	"		"
			39	"	"	"		"	"		"	"		"	"		"	"	"	3Y	"		"
			40	"	"	"		"	"		"	"		"	"		"	"	"	4Y	"		"
			41	"	"	"	V_{ITL}	"	"		"	"		"			"	"	"	$1\overline{Y}$	"		"
			42	"	"	"		"	"	V_{ITL}	"	"		"			"	"	"	$2\overline{Y}$	"		"
			43	"	"	"		"	"		"	"	V_{ITL}	"			"	"	"	$3\overline{Y}$	"		"
			44	"	"	"		"	"		"	"		"		V_{ITL}	"	"	"	$4\overline{Y}$	"		"
2		Same tests and terminal conditions as for subgroup 1, except Tc = 125°C and limits as shown.																			-.845		V
3		Same tests and terminal conditions as for subgroup 1, except Tc = -55°C and limits as shown.																			-1.10		V

TABLE III. Group A inspection for device type 01 - Continued.
For terminal conditions see table IIIA. Terminals not designated are open.

Subgroup	Symbol	MIL-STD-883 method	Case E	1	2	3	4	5	6	7	8	9	10	11	12	13	14	15	16	Measured terminal	Limits		Unit
			Case F	5	6	7	8	9	10	11	12	13	14	15	16	1	2	3	4				
			Case 2	2	3	4	5	7	8	9	10	12	13	14	15	17	18	19	20				
			Test no.	V_{CC1}	$1\overline{Y}$	$2\overline{Y}$	1A	1Y	2Y	2A	V_{EE}	4Y	3A	3Y	B	4A	$3\overline{Y}$	$4\overline{Y}$	V_{CC2}		Min	Max	
1 Tc = 25°C	V_{OTH}		45	GND	LD_1	LD_1	V_{ITH}	LD_1	LD_1		E_1	LD_1		LD_1			LD_1	LD_1	GND	1Y	-0.95		"
			46	"	"	"		"	"	V_{ITH}	"	"		"			"	"	"	2Y	"		"
			47	"	"	"		"	"		"	"	V_{ITH}	"			"	"	"	3Y	"		"
			48	"	"	"		"	"		"	"		"		V_{ITH}	"	"	"	4Y	"		"
2		Same tests and terminal conditions as for subgroup 1, except Tc = 125°C and limits as shown.																			-.845		V
3		Same tests and terminal conditions as for subgroup 1, except Tc = -55°C and limits as shown.																			-1.10		V
1 Tc = 25°C	V_{OTL}		49	GND	LD_1	LD_1		LD_1	LD_1		E_1	LD_1		LD_1	V_{ITL}		LD_1	LD_1	GND	1Y		-1.60	V
			50	"	"	"		"	"		"	"		"	"		"	"	"	2Y		"	"
			51	"	"	"		"	"		"	"		"	"		"	"	"	3Y		"	"
			52	"	"	"		"	"		"	"		"	"		"	"	"	4Y		"	"
			53	"	"	"		"	"		"	"		"	V_{ITH}		"	"	"	$1\overline{Y}$		"	"
			54	"	"	"		"	"		"	"		"	"		"	"	"	$2\overline{Y}$		"	"
			55	"	"	"		"	"		"	"		"	"		"	"	"	$3\overline{Y}$		"	"
			56	"	"	"		"	"		"	"		"	"		"	"	"	$4\overline{Y}$		"	"
			57	"	"	"	V_{ITL}	"	"		"	"		"			"	"	"	1Y		"	"
			58	"	"	"		"	"	V_{ITL}	"	"		"			"	"	"	2Y		"	"
			59	"	"	"		"	"		"	"	V_{ITL}	"			"	"	"	3Y		"	"
			60	"	"	"		"	"		"	"		"		V_{ITL}	"	"	"	4Y		"	"
			61	"	"	"	V_{ITH}	"	"		"	"		"			"	"	"	$1\overline{Y}$		"	"
			62	"	"	"		"	"	V_{ITH}	"	"		"			"	"	"	$2\overline{Y}$		"	"
			63	"	"	"		"	"		"	"	V_{ITH}	"			"	"	"	$3\overline{Y}$		"	"
			64	"	"	"		"	"		"	"		"		V_{ITH}	"	"	"	$4\overline{Y}$		"	"
2		Same tests and terminal conditions as for subgroup 1, except Tc = 125°C and limits as shown.																				-1.525	V
3		Same tests and terminal conditions as for subgroup 1, except Tc = -55°C and limits as shown.																				-1.635	V
1 Tc = 25°C	I_{EE}	3005	65	GND							E_1								GND	V_{EE}		-26	mA
2		Same tests and terminal conditions as for subgroup 1, except Tc = 125°C and limits as shown.																				-29	mA
3		Same tests and terminal conditions as for subgroup 1, except Tc = -55°C and limits as shown.																				-29	mA
1 Tc = 25°C	I_{IH1}	3010	66	GND			V_{IH1}				E_1								GND	1A		265	µA
		"	67	"						V_{IH1}	"								"	2A		"	"
		"	68	"							"		V_{IH1}						"	3A		"	"
		"	69	"							"					V_{IH1}			"	4A		"	"
2		Same tests and terminal conditions as for subgroup 1, except Tc = 125°C and limits as shown.																				450	µA
3		Same tests and terminal conditions as for subgroup 1, except Tc = -55°C and limits as shown.																				450	µA
1 Tc = 25°C	I_{IH2}	3010	70	GND							E_1				V_{IH1}					B		550	µA
2		Same tests and terminal conditions as for subgroup 1, except Tc = 125°C and limits as shown.																				935	µA
3		Same tests and terminal conditions as for subgroup 1, except Tc = -55°C and limits as shown.																				935	µA
1 Tc = 25°C	I_{IIL}	3009	71	GND			V_{IL1}				E_1								GND	1A	0.5		µA
		"	72	"						V_{IL1}	"								"	2A			"
		"	73	"							"		V_{IL1}						"	3A			"
		"	74	"							"					V_{IL1}			"	4A			"
		"	75	"							"				V_{IL1}				"	B			"
2		Same tests and terminal conditions as for subgroup 1, except Tc = 125°C and limits as shown.																			0.3		µA
3		Same tests and terminal conditions as for subgroup 1, except Tc = -55°C and limits as shown.																			0.5		µA
9 Tc = 25°C	t_{TLH}	3004	76	E_3	LD_2	LD_2	IN	OUT	LD_2		E_2	LD_2		LD_2			LD_2	LD_2	E_3	1Y	1.1	3.3	ns
		"	77	"	OUT	"	IN	LD_2	"		"	"		"			"	"	"	$1\overline{Y}$	"	"	"
		"	78	"	LD_2	"		"	OUT	IN	"	"		"			"	"	"	2Y	"	"	"
		"	79	"	"	OUT		"	LD_2	IN	"	"		"			"	"	"	$2\overline{Y}$	"	"	"
		"	80	"	"	LD_2		"	"		"	"	IN	OUT			"	"	"	3Y	"	"	"
		"	81	"	"	"		"	"		"	"	IN	LD_2			OUT	"	"	$3\overline{Y}$	"	"	"
		"	82	"	"	"		"	"		"	OUT		"		IN	LD_2	"	"	4Y	"	"	"
		"	83	"	"	"		"	"		"	LD_2		"		IN	"	OUT	"	$4\overline{Y}$	"	"	"
10		Same tests and terminal conditions as for subgroup 9, except Tc = 125°C and limits as shown.																			1.0	4.0	ns
11		Same tests and terminal conditions as for subgroup 9, except Tc = -55°C and limits as shown.																			1.0	4.0	ns

TABLE III. Group A inspection for device type 01 - Continued.
For terminal conditions see table IIIA. Terminals not designated are open.

Subgroup	Symbol	MIL-STD-883 method	Case E	1	2	3	4	5	6	7	8	9	10	11	12	13	14	15	16	Measured terminal	Limits		Unit
			Case F	5	6	7	8	9	10	11	12	13	14	15	16	1	2	3	4				
			Case 2	2	3	4	5	7	8	9	10	12	13	14	15	17	18	19	20				
			Test no.	V_{CC1}	$1\overline{Y}$	$2\overline{Y}$	1A	1Y	2Y	2A	V_{EE}	4Y	3A	3Y	B	4A	$3\overline{Y}$	$4\overline{Y}$	V_{CC2}		Min	Max	
9 Tc = 25°C	t_{THL}	3004	84	E_3	LD_2	LD_2	IN	OUT	LD_2		E_2	LD_2		LD_2			LD_2	LD_2	E_3	1Y	1.1	3.3	ns
		"	85	"	OUT	"	IN	LD_2	"		"	"		"			"	"	"	$1\overline{Y}$	"	"	"
		"	86	"	LD_2	"		"	OUT	IN	"	"		"			"	"	"	2Y	"	"	"
		"	87	"	"	OUT		"	LD_2	IN	"	"		"			"	"	"	$2\overline{Y}$	"	"	"
		"	88	"	"	LD_2		"	"		"	"	IN	OUT			"	"	"	3Y	"	"	"
		"	89	"	"	"		"	"		"	"	IN	LD_2			OUT	"	"	$3\overline{Y}$	"	"	"
		"	90	"	"	"		"	"		"	OUT		"		IN	LD_2	"	"	4Y	"	"	"
		"	91	"	"	"		"	"		"	LD_2		"		IN	"	OUT	"	$4\overline{Y}$	"	"	"
10		Same tests and terminal conditions as for subgroup 9, except Tc = 125°C and limits as shown.																			1.0	4.0	ns
11		Same tests and terminal conditions as for subgroup 9, except Tc = -55°C and limits as shown.																			1.0	4.0	ns
9 Tc = 25°C	t_{PLH}	3003	92	E_3	LD_2	LD_2	IN	OUT	LD_2		E_2	LD_2		LD_2			LD_2	LD_2	E_3	1Y	1.0	2.9	ns
		"	93	"	OUT	"	IN	LD_2	"		"	"		"			"	"	"	$1\overline{Y}$	"	"	"
		"	94	"	LD_2	"		"	OUT	IN	"	"		"			"	"	"	2Y	"	"	"
		"	95	"	"	OUT		"	LD_2	IN	"	"		"			"	"	"	$2\overline{Y}$	"	"	"
		"	96	"	"	LD_2		"	"		"	"	IN	OUT			"	"	"	3Y	"	"	"
		"	97	"	"	"		"	"		"	"	IN	LD_2			OUT	"	"	$3\overline{Y}$	"	"	"
		"	98	"	"	"		"	"		"	OUT		"		IN	LD_2	"	"	4Y	"	"	"
		"	99	"	"	"		"	"		"	LD_2		"		IN	"	OUT	"	$4\overline{Y}$	"	"	"
10		Same tests and terminal conditions as for subgroup 9, except Tc = 125°C and limits as shown.																			1.0	3.7	ns
11		Same tests and terminal conditions as for subgroup 9, except Tc = -55°C and limits as shown.																			1.0	3.7	ns
9 Tc = 25°C	t_{PHL}	3003	100	E_3	LD_2	LD_2	IN	OUT	LD_2		E_2	LD_2		LD_2			LD_2	LD_2	E_3	1Y	1.0	2.9	ns
		"	101	"	OUT	"	IN	LD_2	"		"	"		"			"	"	"	$1\overline{Y}$	"	"	"
		"	102	"	LD_2	"		"	OUT	IN	"	"		"			"	"	"	2Y	"	"	"
		"	103	"	"	OUT		"	LD_2	IN	"	"		"			"	"	"	$2\overline{Y}$	"	"	"
		"	104	"	"	LD_2		"	"		"	"	IN	OUT			"	"	"	3Y	"	"	"
		"	105	"	"	"		"	"		"	"	IN	LD_2			OUT	"	"	$3\overline{Y}$	"	"	"
		"	106	"	"	"		"	"		"	OUT		"		IN	LD_2	"	"	4Y	"	"	"
		"	107	"	"	"		"	"		"	LD_2		"		IN	"	OUT	"	$4\overline{Y}$	"	"	"
10		Same tests and terminal conditions as for subgroup 9, except Tc = 125°C and limits as shown.																			1.0	3.7	ns
11		Same tests and terminal conditions as for subgroup 9, except Tc = -55°C and limits as shown.																			1.0	3.7	ns

TABLE III. Group A inspection for device type 02.

For terminal conditions see table IIIA. Terminals not designated are open.

Subgroup	Symbol	MIL-STD-883 method	Case E	1	2	3	4	5	6	7	8	9	10	11	12	13	14	15	16	Measured terminal	Limits		Unit
			Case F	5	6	7	8	9	10	11	12	13	14	15	16	1	2	3	4				
			Case 2	2	3	4	5	7	8	9	10	12	13	14	15	17	18	19	20				
			Test no.	V_{CC1}	$1\overline{Y}$	$2\overline{Y}$	1A	1B	2A	2B	V_{EE}	4Y	3A	3B	4A	4B	$3\overline{Y}$	$4\overline{Y}$	V_{CC2}		Min	Max	
1	V_{OH}	3006	1	GND	LD_1	LD_1	V_{IL1}				E_1	LD_1					LD_1	LD_1	GND	$1\overline{Y}$	0.930	-0.780	V
Tc = 25°C		"	2	"	"	"			V_{IL1}	"	"	"					"	"	"	$2\overline{Y}$	"	"	"
		"	3	"	"	"				"	"	"	V_{IL1}				"	"	"	$3\overline{Y}$	"	"	"
		"	4	"	"	"				"	"	"			V_{IL1}		"	"	"	$4\overline{Y}$	"	"	"
		"	5	"	"	"				"	"	"			V_{IH1}		"	"	"	4Y	"	"	"
		"	6	"	"	"		V_{IL1}		"	"	"					"	"	"	$1\overline{Y}$	"	"	"
		"	7	"	"	"				V_{IL1}	"	"					"	"	"	$2\overline{Y}$	"	"	"
		"	8	"	"	"				"	"	"		V_{IL1}			"	"	"	$3\overline{Y}$	"	"	"
		"	9	"	"	"				"	"	"				V_{IL1}	"	"	"	$4\overline{Y}$	"	"	"
		"	10	"	"	"				"	"	"				V_{IH1}	"	"	"	4Y	"	"	"
2		Same tests and terminal conditions as for subgroup 1, except Tc = 125°C and limits as shown.																			-0.825	-0.630	V
3		Same tests and terminal conditions as for subgroup 1, except Tc = -55°C and limits as shown.																			-1.080	-0.880	V
1	V_{OL}	3007	11	GND	LD_1	LD_1					E_1	LD_1			V_{IL1}		LD_1	LD_1	GND	4Y	-.1.850	-1.620	V
Tc = 25°C		"	12	"	"	"	V_{IH1}				"	"					"	"	"	$1\overline{Y}$	"	"	"
		"	13	"	"	"			V_{IH1}	"	"	"					"	"	"	$2\overline{Y}$	"	"	"
		"	14	"	"	"				"	"	"	V_{IH1}				"	"	"	$3\overline{Y}$	"	"	"
		"	15	"	"	"				"	"	"			V_{IH1}		"	"	"	$4\overline{Y}$	"	"	"
		"	16	"	"	"				"	"	"				V_{IL1}	"	"	"	4Y	"	"	"
		"	17	"	"	"		V_{IH1}		"	"	"					"	"	"	$1\overline{Y}$	"	"	"
		"	18	"	"	"				V_{IH1}	"	"					"	"	"	$2\overline{Y}$	"	"	"
		"	19	"	"	"					"	"		V_{IH1}			"	"	"	$3\overline{Y}$	"	"	"
		"	20	"	"	"					"	"				V_{IH1}	"	"	"	$4\overline{Y}$	"	"	"
2		Same tests and terminal conditions as for subgroup 1, except Tc = 125°C and limits as shown.																			-1.820	-1.545	V
3		Same tests and terminal conditions as for subgroup 1, except Tc = -55°C and limits as shown.																			-1.920	-1.655	V
	V_{OTH}		21	GND	LD_1	LD_1	V_{ITL}				E_1	LD_1					LD_1	LD_1	GND	$1\overline{Y}$	-0.950		V
			22	"	"	"			V_{ITL}	"	"	"					"	"	"	$2\overline{Y}$	"		"
			23	"	"	"				"	"	"	V_{ITL}				"	"	"	$3\overline{Y}$	"		"
			24	"	"	"				"	"	"			V_{ITL}		"	"	"	$4\overline{Y}$	"		"
			25	"	"	"				"	"	"			V_{ITH}		"	"	"	4Y	"		"
			26	"	"	"		V_{ITL}		"	"	"					"	"	"	$1\overline{Y}$	"		"
			27	"	"	"				V_{ITL}	"	"					"	"	"	$2\overline{Y}$	"		"
			28	"	"	"				"	"	"		V_{ITL}			"	"	"	$3\overline{Y}$	"		"
			29	"	"	"				"	"	"				V_{ITL}	"	"	"	$4\overline{Y}$	"		"
			30	"	"	"				"	"	"				V_{ITH}	"	"	"	4Y	"		"
2		Same tests and terminal conditions as for subgroup 1, except Tc = 125°C and limits as shown.																			-0.845		V
3		Same tests and terminal conditions as for subgroup 1, except Tc = -55°C and limits as shown.																			-1.100		V
	V_{OTL}		31	GND	LD_1	LD_1					E_1	LD_1			V_{ITL}		LD_1	LD_1	GND	4Y		-1.600	V
			32	"	"	"	V_{ITH}				"	"					"	"	"	$1\overline{Y}$		"	"
			33	"	"	"			V_{ITH}	"	"	"					"	"	"	$2\overline{Y}$		"	"
			34	"	"	"				"	"	"	V_{ITH}				"	"	"	$3\overline{Y}$		"	"
			35	"	"	"				"	"	"			V_{ITH}		"	"	"	$4\overline{Y}$		"	"
			36	"	"	"				"	"	"				V_{ITL}	"	"	"	4Y		"	"
			37	"	"	"		V_{ITH}		"	"	"					"	"	"	$1\overline{Y}$		"	"
			38	"	"	"				V_{ITH}	"	"					"	"	"	$2\overline{Y}$		"	"
			39	"	"	"					"	"		V_{ITH}			"	"	"	$3\overline{Y}$		"	"
			40	"	"	"					"	"				V_{ITH}	"	"	"	$4\overline{Y}$		"	"
2		Same tests and terminal conditions as for subgroup 1, except Tc = 125°C and limits as shown.																				-1.525	V
3		Same tests and terminal conditions as for subgroup 1, except Tc = -55°C and limits as shown.																				-1.635	V

TABLE III. Group A inspection for device type 02 - Continued.
For terminal conditions see table IIIA. Terminals not designated are open.

Subgroup	Symbol	MIL-STD-883 method	Case E	1	2	3	4	5	6	7	8	9	10	11	12	13	14	15	16	Measured terminal	Limits		Unit
			Case F	5	6	7	8	9	10	11	12	13	14	15	16	1	2	3	4				
			Case 2	2	3	4	5	7	8	9	10	12	13	14	15	17	18	19	20				
			Test no.	V_{CC1}	$1\overline{Y}$	$2\overline{Y}$	1A	1B	2A	2B	V_{EE}	4Y	3A	3B	4A	4B	$3\overline{Y}$	$4\overline{Y}$	V_{CC2}		Min	Max	
1 Tc = 25°C	I_{EE}		41	GND							E_1								GND	V_{EE}		-26	mA
2		Same tests and terminal conditions as for subgroup 1, except Tc = 125°C and limits as shown.																				-29	mA
3		Same tests and terminal conditions as for subgroup 1, except Tc = -55°C and limits as shown.																				-29	mA
1 Tc = 25°C	I_{IH1}		42	GND			V_{IH1}				E_1								GND	1A		265	µA
			43	"				V_{IH1}			"								"	1B		"	"
			44	"					V_{IH1}		"								"	2A		"	"
			45	"						V_{IH1}	"								"	2B		"	"
			46	"							"		V_{IH1}						"	3A		"	"
			47	"							"			V_{IH1}					"	3B		"	"
			48	"							"				V_{IH1}				"	4A		"	"
			49	"							"					V_{IH1}			"	4B		"	"
2		Same tests and terminal conditions as for subgroup 1, except Tc = 125°C and limits as shown.																				450	µA
3		Same tests and terminal conditions as for subgroup 1, except Tc = -55°C and limits as shown.																				450	µA
1 Tc = 25°C	I_{IL}		50	GND			V_{IL1}				"								"	1A	0.5		µA
			51	"				V_{IL1}			"								"	1B	"		"
			52	"					V_{IL1}		"								"	2A	"		"
			53	"						V_{IL1}	"								"	2B	"		"
			54	"							"		V_{IL1}						"	3A	"		"
			55	"							"			V_{IL1}					"	3B	"		"
			56	"							"				V_{IL1}				"	4A	"		"
			57	"							"					V_{IL1}			"	4B	"		"
2		Same tests and terminal conditions as for subgroup 1, except Tc = 125°C and limits as shown.																			0.3		µA
3		Same tests and terminal conditions as for subgroup 1, except Tc = -55°C and limits as shown.																			0.5		µA
9 Tc = 25°C	t_{TLH}	3004	58	E_3	OUT	LD_2		IN			E_2	LD_2					LD_2	LD_2	E_3	$1\overline{Y}$	1.1	3.3	ns
		"	59	"	LD_2	OUT				IN	"	"					"	"	"	$2\overline{Y}$	"	"	"
		"	60	"	"	LD_2					"	"		IN			OUT	"	"	$3\overline{Y}$	"	"	"
		"	61	"	"	"					"	"				IN	LD_2	OUT	"	$4\overline{Y}$	"	"	"
		"	62	"	"	"					"	OUT				IN	"	LD_2	"	4Y	"	"	"
10		Same tests and terminal conditions as for subgroup 9, except Tc = 125°C and limits as shown.																			1.0	4.0	ns
11		Same tests and terminal conditions as for subgroup 9, except Tc = -55°C and limits as shown.																			1.0	4.0	ns
9 Tc = 25°C	t_{THL}	3004	63	E_3	OUT	LD_2		IN			E_2	LD_2					LD_2	LD_2	E_3	$1\overline{Y}$	1.1	3.3	ns
		"	64	"	LD_2	OUT				IN	"	"					"	"	"	$2\overline{Y}$	"	"	"
		"	65	"	"	LD_2					"	"		IN			OUT	"	"	$3\overline{Y}$	"	"	"
		"	66	"	"	"					"	"				IN	LD_2	OUT	"	$4\overline{Y}$	"	"	"
		"	67	"	"	"					"	OUT				IN	"	LD_2	"	4Y	"	"	"
10		Same tests and terminal conditions as for subgroup 9, except Tc = 125°C and limits as shown.																			1.0	4.0	ns
11		Same tests and terminal conditions as for subgroup 9, except Tc = -55°C and limits as shown.																			1.0	4.0	ns
9 Tc = 25°C	t_{PLH}	3003	68	E_3	OUT	LD_2		IN			E_2	LD_2					LD_2	LD_2	E_3	$1\overline{Y}$	1.0	2.9	ns
		"	69	"	LD_2	OUT				IN	"	"					"	"	"	$2\overline{Y}$	"	"	"
		"	70	"	"	LD_2					"	"		IN			OUT	"	"	$3\overline{Y}$	"	"	"
		"	71	"	"	"					"	"				IN	LD_2	OUT	"	$4\overline{Y}$	"	"	"
		"	72	"	"	"					"	OUT				IN	"	LD_2	"	4Y	"	"	"
10		Same tests and terminal conditions as for subgroup 9, except Tc = 125°C and limits as shown.																			1.0	3.7	ns
11		Same tests and terminal conditions as for subgroup 9, except Tc = -55°C and limits as shown.																			1.0	3.7	ns
9 Tc = 25°C	t_{PHL}	3003	73	E_3	OUT	LD_2		IN			E_2	LD_2					LD_2	LD_2	E_3	$1\overline{Y}$	1.0	2.9	ns
		"	74	"	LD_2	OUT				IN	"	"					"	"	"	$2\overline{Y}$	"	"	"
		"	75	"	"	LD_2					"	"		IN			OUT	"	"	$3\overline{Y}$	"	"	"
		"	76	"	"	"					"	"				IN	LD_2	OUT	"	$4\overline{Y}$	"	"	"
		"	77	"	"	"					"	OUT				IN	"	LD_2	"	4Y	"	"	"
10		Same tests and terminal conditions as for subgroup 9, except Tc = 125°C and limits as shown.																			1.0	3.7	ns
11		Same tests and terminal conditions as for subgroup 9, except Tc = -55°C and limits as shown.																			1.0	3.7	ns

TABLE III. Group A inspection for device type 03.

For terminal conditions see table IIIA. Terminals not designated are open.

Subgroup	Symbol	MIL-STD-883 method	Case E	1	2	3	4	5	6	7	8	9	10	11	12	13	14	15	16	Measured terminal	Limits		Unit
			Case F	5	6	7	8	9	10	11	12	13	14	15	16	1	2	3	4				
			Case 2	2	3	4	5	7	8	9	10	12	13	14	15	17	18	19	20				
			Test no.	V_{CC1}	1Y	$1\overline{Y}$	1A	1B	$2\overline{Y}$	2Y	V_{EE}	2A	2B	2C	3A	3B	$3\overline{Y}$	3Y	V_{CC2}		Min	Max	
1 Tc = 25°C	V_{OH}	3006	1	GND	LD_1	LD_1	V_{IH1}		LD_1	LD_1	E_1						LD_1	LD_1	GND	1Y	-0.930	-0.780	V
		"	2	"	"	"		V_{IH1}	"	"	"						"	"	"	1Y	"	"	"
		"	3	"	"	"	V_{IL1}		"	"	"						"	"	"	$1\overline{Y}$	"	"	"
		"	4	"	"	"		V_{IL1}	"	"	"						"	"	"	$1\overline{Y}$	"	"	"
		"	5	"	"	"			"	"	"	V_{IL1}					"	"	"	$2\overline{Y}$	"	"	"
		"	6	"	"	"			"	"	"		V_{IL1}				"	"	"	$2\overline{Y}$	"	"	"
		"	7	"	"	"			"	"	"			V_{IL1}			"	"	"	$2\overline{Y}$	"	"	"
		"	8	"	"	"			"	"	"	V_{IH1}					"	"	"	2Y	"	"	"
		"	9	"	"	"			"	"	"		V_{IH1}				"	"	"	2Y	"	"	"
		"	10	"	"	"			"	"	"			V_{IH1}			"	"	"	2Y	"	"	"
		"	11	"	"	"			"	"	"				V_{IL1}		"	"	"	$3\overline{Y}$	"	"	"
		"	12	"	"	"			"	"	"					V_{IL1}	"	"	"	$3\overline{Y}$	"	"	"
		"	13	"	"	"			"	"	"				V_{IH1}		"	"	"	3Y	"	"	"
		"	14	"	"	"			"	"	"					V_{IH1}	"	"	"	3Y	"	"	"
2		Same tests and terminal conditions as for subgroup 1, except Tc = 125°C and limits as shown.																			-0.825	-0.630	V
3		Same tests and terminal conditions as for subgroup 1, except Tc = -55°C and limits as shown.																			-1.080	-0.880	V
1 Tc = 25°C	V_{OL}	3007	15	GND	LD_1	LD_1	V_{IL1}		LD_1	LD_1	E_1						LD_1	LD_1	GND	1Y	-1.850	-1.620	V
		"	16	"	"	"		V_{IL1}	"	"	"						"	"	"	1Y	"	"	"
		"	17	"	"	"	V_{IH1}		"	"	"						"	"	"	$1\overline{Y}$	"	"	"
		"	18	"	"	"		V_{IH1}	"	"	"						"	"	"	$1\overline{Y}$	"	"	"
		"	19	"	"	"			"	"	"	V_{IH1}					"	"	"	$2\overline{Y}$	"	"	"
		"	20	"	"	"			"	"	"		V_{IH1}				"	"	"	$2\overline{Y}$	"	"	"
		"	21	"	"	"			"	"	"			V_{IH1}			"	"	"	$2\overline{Y}$	"	"	"
		"	22	"	"	"			"	"	"	V_{IL1}					"	"	"	2Y	"	"	"
		"	23	"	"	"			"	"	"		V_{IL1}				"	"	"	2Y	"	"	"
		"	24	"	"	"			"	"	"			V_{IL1}			"	"	"	2Y	"	"	"
		"	25	"	"	"			"	"	"				V_{IH1}		"	"	"	$3\overline{Y}$	"	"	"
		"	26	"	"	"			"	"	"					V_{IH1}	"	"	"	$3\overline{Y}$	"	"	"
		"	27	"	"	"			"	"	"				V_{IL1}		"	"	"	3Y	"	"	"
		"	28	"	"	"			"	"	"					V_{IL1}	"	"	"	3Y	"	"	"
2		Same tests and terminal conditions as for subgroup 1, except Tc = 125°C and limits as shown.																			-1.820	-1.545	V
3		Same tests and terminal conditions as for subgroup 1, except Tc = -55°C and limits as shown.																			-1.920	-1.655	V
1 Tc = 25°C	V_{OTH}		29	GND	LD_1	LD_1	V_{ITH}		LD_1	LD_1	E_1						LD_1	LD_1	GND	1Y	-0.950		V
			30	"	"	"		V_{ITH}	"	"	"						"	"	"	1Y	"		"
			31	"	"	"	V_{ITL}		"	"	"						"	"	"	$1\overline{Y}$	"		"
			32	"	"	"		V_{ITL}	"	"	"						"	"	"	$1\overline{Y}$	"		"
			33	"	"	"			"	"	"	V_{ITL}					"	"	"	$2\overline{Y}$	"		"
			34	"	"	"			"	"	"		V_{ITL}				"	"	"	$2\overline{Y}$	"		"
			35	"	"	"			"	"	"			V_{ITL}			"	"	"	$2\overline{Y}$	"		"
			36	"	"	"			"	"	"	V_{ITH}					"	"	"	2Y	"		"
			37	"	"	"			"	"	"		V_{ITH}				"	"	"	2Y	"		"
			38	"	"	"			"	"	"			V_{ITH}			"	"	"	2Y	"		"
			39	"	"	"			"	"	"				V_{ITL}		"	"	"	$3\overline{Y}$	"		"
			40	"	"	"			"	"	"					V_{ITL}	"	"	"	$3\overline{Y}$	"		"
			41	"	"	"			"	"	"				V_{ITH}		"	"	"	3Y	"		"
			42	"	"	"			"	"	"					V_{ITH}	"	"	"	3Y	"		"
2		Same tests and terminal conditions as for subgroup 1, except Tc = 125°C and limits as shown.																			-0.850		V
3		Same tests and terminal conditions as for subgroup 1, except Tc = -55°C and limits as shown.																			-1.100		V

TABLE III. Group A inspection for device type 03 - Continued.
For terminal conditions see table IIIA. Terminals not designated are open.

Subgroup	Symbol	MIL-STD-883 method	Case E	1	2	3	4	5	6	7	8	9	10	11	12	13	14	15	16	Measured terminal	Limits		Unit
			Case F	5	6	7	8	9	10	11	12	13	14	15	16	1	2	3	4				
			Case 2	2	3	4	5	7	8	9	10	12	13	14	15	17	18	19	20				
			Test no.	V_{CC1}	1Y	$1\overline{Y}$	1A	1B	$2\overline{Y}$	2Y	V_{EE}	2A	2B	2C	3A	3B	$3\overline{Y}$	3Y	V_{CC2}		Min	Max	
1 Tc = 25°C	V_{OTL}		43	GND	LD_1	LD_1	V_{ITL}		LD_1	LD_1	E_1						LD_1	LD_1	GND	1Y		-1.600	V
			44	"	"	"		V_{ITL}	"	"	"						"	"	"	1Y		"	"
			45	"	"	"	V_{ITH}		"	"	"						"	"	"	$1\overline{Y}$		"	"
			46	"	"	"		V_{ITH}	"	"	"						"	"	"	$1\overline{Y}$		"	"
			47	"	"	"			"	"	"	V_{ITH}					"	"	"	$2\overline{Y}$		"	"
			48	"	"	"			"	"	"		V_{ITH}				"	"	"	$2\overline{Y}$		"	"
			49	"	"	"			"	"	"			V_{ITH}			"	"	"	$2\overline{Y}$		"	"
			50	"	"	"			"	"	"	V_{ITL}					"	"	"	2Y		"	"
			51	"	"	"			"	"	"		V_{ITL}				"	"	"	2Y		"	"
			52	"	"	"			"	"	"			V_{ITL}			"	"	"	2Y		"	"
			53	"	"	"			"	"	"				V_{ITH}		"	"	"	$3\overline{Y}$		"	"
			54	"	"	"			"	"	"					V_{ITH}	"	"	"	$3\overline{Y}$		"	"
			55	"	"	"			"	"	"				V_{ITL}		"	"	"	3Y		"	"
			56	"	"	"			"	"	"					V_{ITL}	"	"	"	3Y		"	"
2		Same tests and terminal conditions as for subgroup 1, except Tc = 125°C and limits as shown.																				-1.525	V
3		Same tests and terminal conditions as for subgroup 1, except Tc = -55°C and limits as shown.																				-1.635	V
1 Tc = 25°C	I_{EE}	3005	57	GND							E_1								GND	V_{EE}		-21	mA
2		Same tests and terminal conditions as for subgroup 1, except Tc = 125°C and limits as shown.																				-24	mA
3		Same tests and terminal conditions as for subgroup 1, except Tc = -55°C and limits as shown.																				-24	mA
1 Tc = 25°C	I_{IH1}	3010	58	GND							E_1					V_{IH}			GND	3B		265	µA
		"	59	"							"				V_{IH}				"	3A		"	"
		"	60	"			V_{IH1}				"								"	1A		"	"
		"	61	"				V_{IH1}			"								"	1B		"	"
		"	62	"							"	V_{IH1}							"	2A		"	"
		"	63	"							"		V_{IH1}						"	2B		"	"
		"	64	"							"			V_{IH1}					"	2C		"	"
2		Same tests and terminal conditions as for subgroup 1, except Tc = 125°C and limits as shown.																				450	µA
3		Same tests and terminal conditions as for subgroup 1, except Tc = -55°C and limits as shown.																				450	µA
1 Tc = 25°C	I_{IL}	3009	65	GND							E_1					V_{IL}			GND	3B	0.5		µA
		"	66	"							"				V_{IL}				"	3A	"		"
		"	67	"			V_{IL1}				"								"	1A	"		"
		"	68	"				V_{IL1}			"								"	1B	"		"
		"	69	"							"	V_{IL1}							"	2A	"		"
		"	70	"							"		V_{IL1}						"	2B	"		"
		"	71	"							"			V_{IL1}					"	2C	"		"
2		Same tests and terminal conditions as for subgroup 1, except Tc = 125°C and limits as shown.																			0.3		µA
3		Same tests and terminal conditions as for subgroup 1, except Tc = -55°C and limits as shown.																			0.5		µA

TABLE III. Group A inspection for device type 03 - Continued.
For terminal conditions see table IIIA. Terminals not designated are open.

Subgroup	Symbol	MIL-STD-883 method	Case E	1	2	3	4	5	6	7	8	9	10	11	12	13	14	15	16	Measured terminal	Limits		Unit
			Case F	5	6	7	8	9	10	11	12	13	14	15	16	1	2	3	4				
			Case 2	2	3	4	5	7	8	9	10	12	13	14	15	17	18	19	20				
			Test no.	V_{CC1}	1Y	$1\overline{Y}$	1A	1B	$2\overline{Y}$	2Y	V_{EE}	2A	2B	2C	3A	3B	$3\overline{Y}$	3Y	V_{CC2}		Min	Max	
9	t_{TLH}	3004	72	E_3	OUT	LD_2	IN		LD_2	LD_2	E_2						LD_2	LD_2	E_3	1Y	1.1	3.3	ns
Tc = 25°C		"	73	"	LD_2	OUT	IN		"	"	"						"	"	"	$1\overline{Y}$	"	"	"
		"	74	"	"	LD_2			"	OUT	"	IN					"	"	"	2Y	"	"	"
		"	75	"	"	"			OUT	LD_2	"	IN					"	"	"	$2\overline{Y}$	"	"	"
		"	76	"	"	"			LD_2	"	"				IN		"	OUT	"	3Y	"	"	"
		"	77	"	"	"			"	"	"				IN		OUT	LD_2	"	$3\overline{Y}$	"	"	"
10		Same tests and terminal conditions as for subgroup 9, except Tc = 125°C and limits as shown.																			1.0	4.0	ns
11		Same tests and terminal conditions as for subgroup 9, except Tc = -55°C and limits as shown.																			1.0	4.0	ns
9	t_{THL}	3004	78	E_3	OUT	LD_2	IN		LD_2	LD_2	E_2						LD_2	LD_2	E_3	1Y	1.1	3.3	ns
Tc = 25°C		"	79	"	LD_2	OUT	IN		"	"	"						"	"	"	$1\overline{Y}$	"	"	"
		"	80	"	"	LD_2			"	OUT	"	IN					"	"	"	2Y	"	"	"
		"	81	"	"	"			OUT	LD_2	"	IN					"	"	"	$2\overline{Y}$	"	"	"
		"	82	"	"	"			LD_2	"	"				IN		"	OUT	"	3Y	"	"	"
		"	83	"	"	"			"	"	"				IN		OUT	LD_2	"	$3\overline{Y}$	"	"	"
10		Same tests and terminal conditions as for subgroup 9, except Tc = 125°C and limits as shown.																			1.0	4.0	ns
11		Same tests and terminal conditions as for subgroup 9, except Tc = -55°C and limits as shown.																			1.0	4.0	ns
9	t_{PLH}	3003	84	E_3	OUT	LD_2	IN		LD_2	LD_2	E_2						LD_2	LD_2	E_3	1Y	1.0	2.9	ns
Tc = 25°C		"	85	"	LD_2	OUT	IN		"	"	"						"	"	"	$1\overline{Y}$	"	"	"
		"	86	"	"	LD_2			"	OUT	"	IN					"	"	"	2Y	"	"	"
		"	87	"	"	"			OUT	LD_2	"	IN					"	"	"	$2\overline{Y}$	"	"	"
		"	88	"	"	"			LD_2	"	"				IN		"	OUT	"	3Y	"	"	"
		"	89	"	"	"			"	"	"				IN		OUT	LD_2	"	$3\overline{Y}$	"	"	"
10		Same tests and terminal conditions as for subgroup 9, except Tc = 125°C and limits as shown.																			1.0	3.7	ns
11		Same tests and terminal conditions as for subgroup 9, except Tc = -55°C and limits as shown.																			1.0	3.7	ns
9	t_{PHL}	3003	90	E_3	OUT	LD_2	IN		LD_2	LD_2	E_2						LD_2	LD_2	E_3	1Y	1.0	2.9	ns
Tc = 25°C		"	91	"	LD_2	OUT	IN		"	"	"						"	"	"	$1\overline{Y}$	"	"	"
		"	92	"	"	LD_2			"	OUT	"	IN					"	"	"	2Y	"	"	"
		"	93	"	"	"			OUT	LD_2	"	IN					"	"	"	$2\overline{Y}$	"	"	"
		"	94	"	"	"			LD_2	"	"				IN		"	OUT	"	3Y	"	"	"
		"	95	"	"	"			"	"	"				IN		OUT	LD_2	"	$3\overline{Y}$	"	"	"
10		Same tests and terminal conditions as for subgroup 9, except Tc = 125°C and limits as shown.																			1.0	3.7	ns
11		Same tests and terminal conditions as for subgroup 9, except Tc = -55°C and limits as shown.																			1.0	3.7	ns

TABLE III. Group A inspection for device type 04.

For terminal conditions see table IIIA. Terminals not designated are open.

Subgroup	Symbol	MIL-STD-883 method	Case E	1	2	3	4	5	6	7	8	9	10	11	12	13	14	15	16	Measured terminal	Limits		Unit
			Case F	5	6	7	8	9	10	11	12	13	14	15	16	1	2	3	4				
			Case 2	2	3	4	5	7	8	9	10	12	13	14	15	17	18	19	20				
			Test no.	V_{CC1}	$1\overline{Y}$	$2\overline{Y}$	2A	2B	2C	2D	V_{EE}	1A	1B	1C	3A	3B	3C	$3\overline{Y}$	V_{CC2}		Min	Max	
1	V_{OH}	3006	1	GND	LD_1	LD_1					E_1				V_{IL1}			LD_1	GND	$3\overline{Y}$	-1.930	-0.780	V
Tc = 25°C		"	2	"	"	"					"					V_{IL1}		"	"	$3\overline{Y}$	"	"	"
		"	3	"	"	"					"						V_{IL1}	"	"	$3\overline{Y}$	"	"	"
		"	4	"	"	"					"	V_{IL1}						"	"	$1\overline{Y}$	"	"	"
		"	5	"	"	"					"		V_{IL1}					"	"	$1\overline{Y}$	"	"	"
		"	6	"	"	"					"			V_{IL1}				"	"	$1\overline{Y}$	"	"	"
		"	7	"	"	"	V_{IL1}				"							"	"	$2\overline{Y}$	"	"	"
		"	8	"	"	"		V_{IL1}			"							"	"	$2\overline{Y}$	"	"	"
		"	9	"	"	"			V_{IL1}		"							"	"	$2\overline{Y}$	"	"	"
		"	10	"	"	"				V_{IL1}	"							"	"	$2\overline{Y}$	"	"	"
2		Same tests and terminal conditions as for subgroup 1, except Tc = 125°C and limits as shown.																			-0.825	-0.630	V
3		Same tests and terminal conditions as for subgroup 1, except Tc = -55°C and limits as shown.																			-1.080	-0.880	V
1	V_{OL}	3007	11	GND	LD_1	LD_1					E_1				V_{IH1}			LD_1	GND	$3\overline{Y}$	-1.850	-1.620	V
Tc = 25°C		"	12	"	"	"					"					V_{IH1}		"	"	$3\overline{Y}$	"	"	"
		"	13	"	"	"					"						V_{IH1}	"	"	$3\overline{Y}$	"	"	"
		"	14	"	"	"					"	V_{IH1}						"	"	$1\overline{Y}$	"	"	"
		"	15	"	"	"					"		V_{IH1}					"	"	$1\overline{Y}$	"	"	"
		"	16	"	"	"					"			V_{IH1}				"	"	$1\overline{Y}$	"	"	"
		"	17	"	"	"	V_{IH1}				"							"	"	$2\overline{Y}$	"	"	"
		"	18	"	"	"		V_{IH1}			"							"	"	$2\overline{Y}$	"	"	"
		"	19	"	"	"			V_{IH1}		"							"	"	$2\overline{Y}$	"	"	"
		"	20	"	"	"				V_{IH1}	"							"	"	$2\overline{Y}$	"	"	"
2		Same tests and terminal conditions as for subgroup 1, except Tc = 125°C and limits as shown.																			-1.820	-1.545	V
3		Same tests and terminal conditions as for subgroup 1, except Tc = -55°C and limits as shown.																			-1.920	-1.655	V
1	V_{OTH}		21	GND	LD_1	LD_1					E_1				V_{ITL}			LD_1	"	$3\overline{Y}$	-0.950		V
Tc = 25°C			22	"	"	"					"					V_{ITL}		"	"	$3\overline{Y}$	"		"
			23	"	"	"					"						V_{ITL}	"	"	$3\overline{Y}$	"		"
			24	"	"	"					"	V_{ITL}						"	"	$1\overline{Y}$	"		"
			25	"	"	"					"		V_{ITL}					"	"	$1\overline{Y}$	"		"
			26	"	"	"					"			V_{ITL}				"	"	$1\overline{Y}$	"		"
			27	"	"	"	V_{ITL}				"							"	"	$2\overline{Y}$	"		"
			28	"	"	"		V_{ITL}			"							"	"	$2\overline{Y}$	"		"
			29	"	"	"			V_{ITL}		"							"	"	$2\overline{Y}$	"		"
			30	"	"	"				V_{ITL}	"							"	"	$2\overline{Y}$	"		"
2		Same tests and terminal conditions as for subgroup 1, except Tc = 125°C and limits as shown.																			-0.845		V
3		Same tests and terminal conditions as for subgroup 1, except Tc = -55°C and limits as shown.																			-1.100		V
1	V_{OTL}		31	GND	LD_1	LD_1					E_1				V_{ITH}			LD_1	GND	$3\overline{Y}$		-1.600	V
Tc = 25°C			32	"	"	"					"					V_{ITH}		"	"	$3\overline{Y}$		"	"
			33	"	"	"					"						V_{ITH}	"	"	$3\overline{Y}$		"	"
			34	"	"	"					"	V_{ITH}						"	"	$1\overline{Y}$		"	"
			35	"	"	"					"		V_{ITH}					"	"	$1\overline{Y}$		"	"
2		Same tests and terminal conditions as for subgroup 1, except Tc = 125°C and limits as shown.																				-1.525	V
3		Same tests and terminal conditions as for subgroup 1, except Tc = -55°C and limits as shown.																				-1.635	V

TABLE III. Group A inspection for device type 04 - Continued.

For terminal conditions see table IIIA. Terminals not designated are open.

Subgroup	Symbol	MIL-STD-883 method	Case E	1	2	3	4	5	6	7	8	9	10	11	12	13	14	15	16	Measured terminal	Limits		Unit
			Case F	5	6	7	8	9	10	11	12	13	14	15	16	1	2	3	4				
			Case 2	2	3	4	5	7	8	9	10	12	13	14	15	17	18	19	20				
			Test no.	V_{CC1}	$1\overline{Y}$	$2\overline{Y}$	2A	2B	2C	2D	V_{EE}	1A	1B	1C	3A	3B	3C	$3\overline{Y}$	V_{CC2}		Min	Max	
1 Tc = 25°C	V_{OTL}		36	GND	LD_1	LD_1					E_1			V_{ITH}				LD_1	GND	$1\overline{Y}$	-1.600		V
			37	"	"	"	V_{ITH}				"							"	"	$2\overline{Y}$	"		"
			38	"	"	"		V_{ITH}			"							"	"	$2\overline{Y}$	"		"
			39	"	"	"			V_{ITH}		"							"	"	$2\overline{Y}$	"		"
			40	"	"	"				V_{ITH}	"							"	"	$2\overline{Y}$	"		"
2		Same tests and terminal conditions as for subgroup 1, except Tc = 125°C and limits as shown.																			-1.525		V
3		Same tests and terminal conditions as for subgroup 1, except Tc = -55°C and limits as shown.																			-1.635		V
1 Tc = 25°C	I_{EE}	3005	41	GND							E_1								GND	V_{EE}		-21	mA
2		Same tests and terminal conditions as for subgroup 1, except Tc = 125°C and limits as shown.																				-24	mA
3		Same tests and terminal conditions as for subgroup 1, except Tc = -55°C and limits as shown.																				-24	mA
1 Tc = 25°C	I_{IH1}	3010	42	GND							E_1				V_{IH1}				GND	3A		265	µA
		"	43	"							"					V_{IH1}			"	3B		"	"
		"	44	"							"						V_{IH1}		"	3C		"	"
		"	45	"							"	V_{IH1}							"	1A		"	"
		"	46	"							"		V_{IH1}						"	1B		"	"
		"	47	"							"			V_{IH1}					"	1C		"	"
		"	48	"			V_{IH1}				"								"	2A		"	"
		"	49	"				V_{IH1}			"								"	2B		"	"
		"	50	"					V_{IH1}		"								"	2C		"	"
		"	51	"						V_{IH1}	"								"	2D		"	"
2		Same tests and terminal conditions as for subgroup 1, except Tc = 125°C and limits as shown.																				450	µA
3		Same tests and terminal conditions as for subgroup 1, except Tc = -55°C and limits as shown.																				450	µA
1 Tc = 25°C	I_{IL}	3009	52	GND							E_1				V_{IL1}				GND	3A	0.5		µA
		"	53	"							"					V_{IL1}			"	3B	"		"
		"	54	"							"						V_{IL1}		"	3C	"		"
		"	55	"							"	V_{IL1}							"	1A	"		"
		"	56	"							"		V_{IL1}						"	1B	"		"
		"	57	"							"			V_{IL1}					"	1C	"		"
		"	58	"			V_{IL1}				"								"	2A	"		"
		"	59	"				V_{IL1}			"								"	2B	"		"
		"	60	"					V_{IL1}		"								"	2C	"		"
		"	61	"						V_{IL1}	"								"	2D	"		"
2		Same tests and terminal conditions as for subgroup 1, except Tc = 125°C and limits as shown.																			0.3		µA
3		Same tests and terminal conditions as for subgroup 1, except Tc = -55°C and limits as shown.																			0.5		µA

TABLE III. Group A inspection for device type 04 - Continued.
For terminal conditions see table IIIA. Terminals not designated are open.

Subgroup	Symbol	MIL-STD-883 method	Case E	1	2	3	4	5	6	7	8	9	10	11	12	13	14	15	16	Measured terminal	Limits		Unit
			Case F	5	6	7	8	9	10	11	12	13	14	15	16	1	2	3	4				
			Case 2	2	3	4	5	7	8	9	10	12	13	14	15	17	18	19	20				
			Test no.	V_{CC1}	$1\overline{Y}$	$2\overline{Y}$	2A	2B	2C	2D	V_{EE}	1A	1B	1C	3A	3B	3C	$3\overline{Y}$	V_{CC2}		Min	Max	
9	t_{TLH}	3004	62	E_3	LD_2	OUT			IN		E_2							LD_2	E_3	$2\overline{Y}$	1.1	3.3	ns
Tc = 25°C		"	63	"	OUT	LD_2					"		IN					"	"	$1\overline{Y}$	"	"	"
		"	64	"	LD_2						"					IN		OUT	"	$3\overline{Y}$	"	"	"
10		Same tests and terminal conditions as for subgroup 9, except Tc = 125°C and limits as shown.																			1.0	4.0	ns
11		Same tests and terminal conditions as for subgroup 9, except Tc = -55°C and limits as shown.																			1.0	4.0	ns
9	t_{THL}	3004	65	E_3		OUT			IN		E_2							LD_2	E_3	$2\overline{Y}$	1.1	3.3	ns
Tc = 25°C		"	66	"	OUT	LD_2					"		IN					"	"	$1\overline{Y}$	"	"	"
		"	67	"	LD_2						"					IN		OUT	"	$3\overline{Y}$	"	"	"
10		Same tests and terminal conditions as for subgroup 9, except Tc = 125°C and limits as shown.																			1.0	4.0	ns
11		Same tests and terminal conditions as for subgroup 9, except Tc = -55°C and limits as shown.																			1.0	4.0	ns
9	t_{PLH}	3003	68	E_3		OUT			IN		E_2							LD_2	E_3	$2\overline{Y}$	1.0	2.9	ns
Tc = 25°C			69	"	OUT	LD_2					"		IN					"	"	$1\overline{Y}$	"	"	"
			70	"	LD_2	LD_2					"					IN		OUT	"	$3\overline{Y}$	"	"	"
10		Same tests and terminal conditions as for subgroup 9, except Tc = 125°C and limits as shown.																			1.0	3.7	ns
11		Same tests and terminal conditions as for subgroup 9, except Tc = -55°C and limits as shown.																			1.0	3.7	ns
9	t_{PHL}	3003	71	E_3	LD_2	OUT			IN		E_2							LD_2	E_3	$2\overline{Y}$	1.0	2.9	ns
Tc = 25°C			72	"	OUT	LD_2					"		IN					"	"	$1\overline{Y}$	"	"	"
			73	"	LD_2	LD_2					"					IN		OUT	"	$3\overline{Y}$	"	"	"
10		Same tests and terminal conditions as for subgroup 9, except Tc = 125°C and limits as shown.																			1.0	3.7	ns
11		Same tests and terminal conditions as for subgroup 9, except Tc = -55°C and limits as shown.																			1.0	3.7	ns

TABLE III. Group A inspection for device type 05.

For terminal conditions see table IIIA. Terminals not designated are open.

Subgroup	Symbol	MIL-STD-883 method	Case E	1	2	3	4	5	6	7	8	9	10	11	12	13	14	15	16	Measured terminal	Limits		Unit
			Case F	5	6	7	8	9	10	11	12	13	14	15	16	1	2	3	4				
			Case 2	2	3	4	5	7	8	9	10	12	13	14	15	17	18	19	20				
			Test no.	V_{CC1}	$1\overline{Y}$	1Y	1A	1B		2B	V_{EE}	2A	2Y	$2\overline{Y}$	$3\overline{Y}$	3Y	3A	3B	V_{CC2}		Min	Max	
1 Tc = 25°C	V_{OH}	3006	1	GND	LD_1	LD_1					E_1		LD_1	LD_1	LD_1	LD_1		V_{IH1}	GND	3Y	-0.930	-0.780	V
		"	2	"	"	"					"		"	"	"	"	V_{IH1}		"	3Y	"	"	"
		"	3	"	"	"	V_{IH1}				"		"	"	"	"			"	1Y	"	"	"
		"	4	"	"	"		V_{IH1}			"		"	"	"	"			"	1Y	"	"	"
		"	5	"	"	"					"	V_{IH1}	"	"	"	"			"	2Y	"	"	"
		"	6	"	"	"				V_{IH1}	"		"	"	"	"			"	2Y	"	"	"
		"	7	"	"	"					"		"	"	"	"		V_{IL1}	"	$3\overline{Y}$	"	"	"
		"	8	"	"	"					"		"	"	"	"	V_{IL1}		"	$3\overline{Y}$	"	"	"
		"	9	"	"	"	V_{IL1}				"		"	"	"	"			"	$1\overline{Y}$	"	"	"
		"	10	"	"	"		V_{IL1}			"		"	"	"	"			"	$1\overline{Y}$	"	"	"
		"	11	"	"	"					"	V_{IL1}	"	"	"	"			"	$2\overline{Y}$	"	"	"
		"	12	"	"	"				V_{IL1}	"		"	"	"	"			"	$2\overline{Y}$	"	"	"
		"	13	"	"	"					"		"	"	"	"	V_{IL1}	V_{IL1}	"	$3\overline{Y}$	"	"	"
		"	14	"	"	"	V_{IL1}	V_{IL1}			"		"	"	"	"			"	$1\overline{Y}$	"	"	"
		"	15	"	"	"				V_{IL1}	"	V_{IL1}	"	"	"	"			"	$2\overline{Y}$	"	"	"
2		Same tests and terminal conditions as for subgroup 1, except Tc = 125°C and limits as shown.																			-0.825	-0.630	V
3		Same tests and terminal conditions as for subgroup 1, except Tc = -55°C and limits as shown.																			-1.080	-0.880	V
1 Tc = 25°C	V_{OL}	3007	16	GND	LD_1	LD_1					E_1		LD_1	LD_1	LD_1	LD_1		V_{IH1}	GND	$3\overline{Y}$	-1.850	-1.620	V
		"	17	"	"	"					"		"	"	"	"	V_{IH1}		"	$3\overline{Y}$	"	"	"
		"	18	"	"	"	V_{IH1}				"		"	"	"	"			"	$1\overline{Y}$	"	"	"
		"	19	"	"	"		V_{IH1}			"		"	"	"	"			"	$1\overline{Y}$	"	"	"
		"	20	"	"	"					"	V_{IH1}	"	"	"	"			"	$2\overline{Y}$	"	"	"
		"	21	"	"	"				V_{IH1}	"		"	"	"	"			"	$2\overline{Y}$	"	"	"
		"	22	"	"	"					"		"	"	"	"		V_{IL1}	"	3Y	"	"	"
		"	23	"	"	"					"		"	"	"	"	V_{IL1}		"	3Y	"	"	"
		"	24	"	"	"	V_{IL1}				"		"	"	"	"			"	1Y	"	"	"
		"	25	"	"	"		V_{IL1}			"		"	"	"	"			"	1Y	"	"	"
		"	26	"	"	"					"	V_{IL1}	"	"	"	"			"	2Y	"	"	"
		"	27	"	"	"				V_{IL1}	"		"	"	"	"			"	2Y	"	"	"
		"	28	"	"	"					"		"	"	"	"	V_{IH1}	V_{IH1}	"	3Y	"	"	"
		"	29	"	"	"	V_{IH1}	V_{IH1}			"		"	"	"	"			"	1Y	"	"	"
		"	30	"	"	"				V_{IH1}	"	V_{IH1}	"	"	"	"			"	2Y	"	"	"
2		Same tests and terminal conditions as for subgroup 1, except Tc = 125°C and limits as shown.																			-1.820	-1.545	V
3		Same tests and terminal conditions as for subgroup 1, except Tc = -55°C and limits as shown.																			-1.920	-1.655	V
1 Tc = 25°C	V_{OTH}		31	GND	LD_1	LD_1					E_1		LD_1	LD_1	LD_1	LD_1		V_{ITH}	GND	3Y	-0.950		V
			32	"	"	"					"		"	"	"	"	V_{ITH}		"	3Y	"		"
			33	"	"	"	V_{ITH}				"		"	"	"	"			"	1Y	"		"
			34	"	"	"		V_{ITH}			"		"	"	"	"			"	1Y	"		"
			35	"	"	"					"	V_{ITH}	"	"	"	"			"	2Y	"		"
			36	"	"	"				V_{ITH}	"		"	"	"	"			"	2Y	"		"
			37	"	"	"					"		"	"	"	"		V_{ITL}	"	$3\overline{Y}$	"		"
			38	"	"	"					"		"	"	"	"	V_{ITL}		"	$3\overline{Y}$	"		"
			39	"	"	"	V_{ITL}				"		"	"	"	"			"	$1\overline{Y}$	"		"
			40	"	"	"		V_{ITL}			"		"	"	"	"			"	$1\overline{Y}$	"		"
2		Same tests and terminal conditions as for subgroup 1, except Tc = 125°C and limits as shown.																			-0.845		V
3		Same tests and terminal conditions as for subgroup 1, except Tc = -55°C and limits as shown.																			-1.100		V

TABLE III. Group A inspection for device type 05 - Continued.
For terminal conditions see table IIIA. Terminals not designated are open.

Subgroup	Symbol	MIL-STD-883 method	Case E	1	2	3	4	5	6	7	8	9	10	11	12	13	14	15	16	Measured terminal	Limits		Unit
			Case F	5	6	7	8	9	10	11	12	13	14	15	16	1	2	3	4				
			Case 2	2	3	4	5	7	8	9	10	12	13	14	15	17	18	19	20				
			Test no.	V_{CC1}	$1\overline{Y}$	1Y	1A	1B		2B	V_{EE}	2A	2Y	$2\overline{Y}$	$3\overline{Y}$	3Y	3A	3B	V_{CC2}		Min	Max	
1	V_{OTH}		41	GND	LD_1	LD_1					E_1	V_{ITL}	LD_1	LD_1	LD_1	LD_1			GND	$2\overline{Y}$	-0.950		V
Tc = 25°C			42	"	"	"				V_{ITL}	"		"	"	"	"			"	$2\overline{Y}$	"		"
			43	"	"	"					"		"	"	"	"	V_{ITL}	V_{ITL}	"	$3\overline{Y}$	"		"
			44	"	"	"	V_{ITL}	V_{ITL}			"		"	"	"	"			"	$1\overline{Y}$	"		"
			45	"	"	"				V_{ITL}	"	V_{ITL}	"	"	"	"			"	$2\overline{Y}$	"		"
2		Same tests and terminal conditions as for subgroup 1, except Tc = 125°C and limits as shown.																			-0.845		V
3		Same tests and terminal conditions as for subgroup 1, except Tc = -55°C and limits as shown.																			-1.100		V
1	V_{OTL}		46	GND	LD_1	LD_1					E_1		LD_1	LD_1	LD_1	LD_1		V_{ITH}	GND	$3\overline{Y}$		-1.600	V
Tc = 25°C			47	"	"	"					"		"	"	"	"	V_{ITH}		"	$3\overline{Y}$		"	"
			48	"	"	"	V_{ITH}				"		"	"	"	"			"	$1\overline{Y}$		"	"
			49	"	"	"		V_{ITH}			"		"	"	"	"			"	$1\overline{Y}$		"	"
			50	"	"	"					"	V_{ITH}	"	"	"	"			"	$2\overline{Y}$		"	"
			51	"	"	"				V_{ITH}	"		"	"	"	"			"	$2\overline{Y}$		"	"
			52	"	"	"					"		"	"	"	"		V_{ITL}	"	3Y		"	"
			53	"	"	"					"		"	"	"	"	V_{ITL}		"	3Y		"	"
			54	"	"	"	V_{ITL}				"		"	"	"	"			"	1Y		"	"
			55	"	"	"		V_{ITL}			"		"	"	"	"			"	1Y		"	"
			56	"	"	"					"	V_{ITL}	"	"	"	"			"	2Y		"	"
			57	"	"	"				V_{ITL}	"		"	"	"	"			"	2Y		"	"
			58	"	"	"					"		"	"	"	"	V_{ITH}	V_{ITH}	"	3Y		"	"
			59	"	"	"	V_{ITH}	V_{ITH}			"		"	"	"	"			"	1Y		"	"
			60	"	"	"				V_{ITH}	"	V_{ITH}	"	"	"	"			"	2Y		"	"
2		Same tests and terminal conditions as for subgroup 1, except Tc = 125°C and limits as shown.																				-1.525	V
3		Same tests and terminal conditions as for subgroup 1, except Tc = -55°C and limits as shown.																				-1.635	V
1	I_{EE}	3005	61	GND				V_{IH1}		V_{IH1}	E_1							V_{IH1}	GND	V_{EE}		-28	mA
Tc = 25°C																							
		Same tests and terminal conditions as for subgroup 1, except Tc = 125°C and limits as shown.																				-31	mA
3		Same tests and terminal conditions as for subgroup 1, except Tc = -55°C and limits as shown.																				-31	mA
1	I_{IH1}	3010	62	GND			V_{IH1}				E_1								GND	1A		265	µA
Tc = 25°C			63	"							"	V_{IH1}							"	2A		"	"
			64	"							"						V_{IH1}		"	3A		"	"
			65	"			V_{IH1}	V_{IH1}			"								"	1A		"	"
			66	"						V_{IH1}	"	V_{IH1}							"	2A		"	"
			67	"							"						V_{IH1}	V_{IH1}	"	3A		"	"
2		Same tests and terminal conditions as for subgroup 1, except Tc = 125°C and limits as shown.																				450	µA
3		Same tests and terminal conditions as for subgroup 1, except Tc = -55°C and limits as shown.																				450	µA
1	I_{IH2}	3010	68	GND				V_{IH1}			E_1								GND	1B		220	µA
Tc = 25°C			69	"						V_{IH1}	"								"	2B		"	"
			70	"							"							V_{IH1}	"	3B		"	"
2		Same tests and terminal conditions as for subgroup 1, except Tc = 125°C and limits as shown.																				375	µA
3		Same tests and terminal conditions as for subgroup 1, except Tc = -55°C and limits as shown.																				375	µA
1	I_{IL}	3009	71	GND			V_{IL1}				E_1								GND	1A	0.5		µA
Tc = 25°C		"	72	"				V_{IL1}			"								"	1B	"		"
		"	73	"						V_{IL1}	"								"	2B	"		"
		"	74	"							"	V_{IL1}							"	2A	"		"
		"	75	"							"						V_{IL1}		"	3A	"		"
		"	76	"							"							V_{IL1}	"	3B	"		"
2		Same tests and terminal conditions as for subgroup 1, except Tc = 125°C and limits as shown.																			0.3		µA
3		Same tests and terminal conditions as for subgroup 1, except Tc = -55°C and limits as shown.																			0.5		µA

TABLE III. Group A inspection for device type 05 - Continued.
For terminal conditions see table IIIA. Terminals not designated are open.

Subgroup	Symbol	MIL-STD-883 method	Case E	1	2	3	4	5	6	7	8	9	10	11	12	13	14	15	16	Measured terminal	Limits		Unit
			Case F	5	6	7	8	9	10	11	12	13	14	15	16	1	2	3	4				
			Case 2	2	3	4	5	7	8	9	10	12	13	14	15	17	18	19	20				
			Test no.	V_{CC1}	$1\overline{Y}$	1Y	1A	1B		2B	V_{EE}	2A	2Y	$2\overline{Y}$	$3\overline{Y}$	3Y	3A	3B	V_{CC2}		Min	Max	
9 Tc = 25°C	t_{TLH}	3004	77	E_3	LD_2	OUT	IN	V_{IL2}			E_2		LD_2	LD_2	LD_2	LD_2			E_3	1Y	1.1	3.5	ns
		"	78	"	OUT	LD_2	IN	V_{IL2}			"		"	"	"	"			"	$1\overline{Y}$	"	"	"
		"	79	"	LD_2	"				IN	"	V_{IL2}	OUT	"	"	"			"	2Y	"	"	"
		"	80	"	"	"				IN	"	V_{IL2}	LD_2	OUT	"	"			"	$2\overline{Y}$	"	"	"
		"	81	"	"	"					"		"	LD_2	"	OUT	IN	V_{IL2}	"	3Y	"	"	"
		"	82	"	"	"					"		"	"	OUT	LD_2	IN	V_{IL2}	"	$3\overline{Y}$	"	"	"
10		Same tests and terminal conditions as for subgroup 9, except Tc = 125°C and limits as shown.																			1.0	4.3	ns
11		Same tests and terminal conditions as for subgroup 9, except Tc = -55°C and limits as shown.																			1.0	4.3	ns
9 Tc = 25°C	t_{THL}	3004	83	"	LD_2	OUT	V_{IL2}	IN			E_2		LD_2	LD_2	LD_2	LD_2			"	1Y	1.1	3.5	ns
		"	84	"	OUT	LD_2	V_{IL2}	IN			"		"	"	"	"			"	$1\overline{Y}$	"	"	"
		"	85	"	LD_2	"				V_{IL2}	"	IN	OUT	"	"	"			"	2Y	"	"	"
		"	86	"	"	"				V_{IL2}	"	IN	LD_2	OUT	"	"			"	$2\overline{Y}$	"	"	"
		"	87	"	"	"					"		"	LD_2	"	OUT	V_{IL2}	IN	"	3Y	"	"	"
		"	88	"	"	"					"		"	"	OUT	LD_2	V_{IL2}	IN	"	$3\overline{Y}$	"	"	"
10		Same tests and terminal conditions as for subgroup 9, except Tc = 125°C and limits as shown.																			1.0	4.3	ns
11		Same tests and terminal conditions as for subgroup 9, except Tc = -55°C and limits as shown.																			1.0	4.3	ns
9 Tc = 25°C	t_{PLH}	3003	89	E_3	LD_2	OUT	IN	V_{IL2}			E_2		LD_2	LD_2	LD_2	LD_2			E_3	1Y	1.1	3.7	ns
		"	90	"	"	"	IN	V_{IH2}			"		"	"	"	"			"	1Y	"	"	"
		"	91	"	"	"	V_{IH2}	IN			"		"	"	"	"			"	1Y	"	"	"
		"	92	"	"	"	V_{IL2}	"			"		"	"	"	"			"	1Y	"	"	"
		"	93	"	OUT	LD_2	V_{IH2}	"			"		"	"	"	"			"	$1\overline{Y}$	"	"	"
		"	94	"	"	"	V_{IL2}	"			"		"	"	"	"			"	$1\overline{Y}$	"	"	"
		"	95	"	"	"	IN	V_{IL2}			"		"	"	"	"			"	$1\overline{Y}$	"	"	"
		"	96	"	"	"	IN	V_{IH2}			"		"	"	"	"			"	$1\overline{Y}$	"	"	"
		"	97	"	LD_2	"				IN	"	V_{IL2}	OUT	"	"	"			"	2Y	"	"	"
		"	98	"	"	"				IN	"	V_{IH2}	"	"	"	"			"	2Y	"	"	"
		"	99	"	"	"				V_{IH2}	"	IN	"	"	"	"			"	2Y	"	"	"
		"	100	"	"	"				V_{IL2}	"	"	"	"	"	"			"	2Y	"	"	"
		"	101	"	"	"				V_{IH2}	"	"	LD_2	OUT	"	"			"	$2\overline{Y}$	"	"	"
		"	102	"	"	"				V_{IL2}	"	"	"	"	"	"			"	$2\overline{Y}$	"	"	"
		"	103	"	"	"				IN	"	V_{IL2}	"	"	"	"			"	$2\overline{Y}$	"	"	"
		"	104	"	"	"				IN	"	V_{IH2}	"	"	"	"			"	$2\overline{Y}$	"	"	"
		"	105	"	"	"					"		"	LD_2	"	OUT	IN	V_{IL2}	"	3Y	"	"	"
		"	106	"	"	"					"		"	"	"	"	IN	V_{IH2}	"	3Y	"	"	"
		"	107	"	"	"					"		"	"	"	"	V_{IH2}	IN	"	3Y	"	"	"
		"	108	"	"	"					"		"	"	"	"	V_{IL2}	"	"	3Y	"	"	"
		"	109	"	"	"					"		"	"	OUT	LD_2	V_{IL2}	"	"	$3\overline{Y}$	"	"	"
		"	110	"	"	"					"		"	"	"	"	V_{IH2}	"	"	$3\overline{Y}$	"	"	"
		"	111	"	"	"					"		"	"	"	"	IN	V_{IH2}	"	$3\overline{Y}$	"	"	"
		"	112	"	"	"					"		"	"	"	"	IN	V_{IL2}	"	$3\overline{Y}$	"	"	"
10		Same tests and terminal conditions as for subgroup 9, except Tc = 125°C and limits as shown.																			1.0	4.5	ns
11		Same tests and terminal conditions as for subgroup 9, except Tc = -55°C and limits as shown.																			1.0	4.5	ns

TABLE III. Group A inspection for device type 05 - Continued.

For terminal conditions see table IIIA. Terminals not designated are open.

Subgroup	Symbol	MIL-STD-883 method	Case E	1	2	3	4	5	6	7	8	9	10	11	12	13	14	15	16	Measured terminal	Limits		Unit
			Case F	5	6	7	8	9	10	11	12	13	14	15	16	1	2	3	4				
			Case 2	2	3	4	5	7	8	9	10	12	13	14	15	17	18	19	20				
			Test no.	V_{CC1}	$1\overline{Y}$	1Y	1A	1B		2B	V_{EE}	2A	2Y	$2\overline{Y}$	$3\overline{Y}$	3Y	3A	3B	V_{CC2}		Min	Max	
9 Tc = 25°C	t_{PHL}	3003	113	E_3	LD_2	OUT	IN	V_{IH2}			E_2		LD_2	LD_2	LD_2	LD_2			E_3	1Y	1.1	3.7	ns
		"	114	"	"	"	IN	V_{IL2}			"		"	"	"	"			"	1Y	"	"	"
		"	115	"	"	"	V_{IL2}	IN			"		"	"	"	"			"	1Y	"	"	"
		"	116	"	"	"	V_{IH2}	"			"		"	"	"	"			"	1Y	"	"	"
		"	117	"	OUT	LD_2	V_{IL2}	"			"		"	"	"	"			"	$1\overline{Y}$	"	"	"
		"	118	"	"	"	V_{IH2}	"			"		"	"	"	"			"	$1\overline{Y}$	"	"	"
		"	119	"	"	"	IN	V_{IH2}			"		"	"	"	"			"	$1\overline{Y}$	"	"	"
		"	120	"	"	"	IN	V_{IL2}			"		"	"	"	"			"	$1\overline{Y}$	"	"	"
		"	121	"	LD_2	"				IN	"	V_{IH2}	OUT	"	"	"			"	2Y	"	"	"
		"	122	"	"	"				IN	"	V_{IL2}	"	"	"	"			"	2Y	"	"	"
		"	123	"	"	"				V_{IL2}	"	IN	"	"	"	"			"	2Y	"	"	"
		"	124	"	"	"				V_{IH2}	"	"	"	"	"	"			"	2Y	"	"	"
		"	125	"	"	"				V_{IL2}	"	"	LD_2	OUT	"	"			"	$2\overline{Y}$	"	"	"
		"	126	"	"	"				V_{IH2}	"	"	"	"	"	"			"	$2\overline{Y}$	"	"	"
		"	127	"	"	"				IN	"	V_{IH2}	"	"	"	"			"	$2\overline{Y}$	"	"	"
		"	128	"	"	"				IN	"	V_{IL2}	"	"	"	"			"	$2\overline{Y}$	"	"	"
		"	129	"	"	"					"		"	LD_2	"	OUT	IN	V_{IL2}	"	3Y	"	"	"
		"	130	"	"	"					"		"	"	"	"	IN	V_{IH2}	"	3Y	"	"	"
		"	131	"	"	"					"		"	"	"	"	V_{IL2}	IN	"	3Y	"	"	"
		"	132	"	"	"					"		"	"	"	"	V_{IH2}	"	"	3Y	"	"	"
		"	133	"	"	"					"		"	"	OUT	LD_2	V_{IL2}	"	"	$3\overline{Y}$	"	"	"
		"	134	"	"	"					"		"	"	"	"	V_{IH2}	"	"	$3\overline{Y}$	"	"	"
		"	135	"	"	"					"		"	"	"	"	IN	V_{IH2}	"	$3\overline{Y}$	"	"	"
		"	136	"	"	"					"		"	"	"	"	IN	V_{IL2}	"	$3\overline{Y}$	"	"	"
10		Same tests and terminal conditions as for subgroup 9, except Tc = 125°C and limits as shown.																			1.0	4.5	ns
11		Same tests and terminal conditions as for subgroup 9, except Tc = -55°C and limits as shown.																			1.0	4.5	ns

TABLE III. Group A inspection for device type 06.

For terminal conditions see table IIIA. Terminals not designated are open.

Subgroup	Symbol	MIL-STD-883 method	Case E	1	2	3	4	5	6	7	8	9	10	11	12	13	14	15	16	Measured terminal	Limits		Unit
			Case F	5	6	7	8	9	10	11	12	13	14	15	16	1	2	3	4				
			Case 2	2	3	4	5	7	8	9	10	12	13	14	15	17	18	19	20				
			Test no.	V_{CC1}	1Y	$1\overline{Y}$	1A	1B	1C	1D	V_{EE}	2A	2B	2C	2D	2E	$2\overline{Y}$	2Y	V_{CC2}		Min	Max	
1 Tc = 25°C	V_{OH}	3006	1	GND	LD_1	LD_1	V_{IH1}				E_1						LD_1	LD_1	GND	1Y	-0.930	-0.780	V
		"	2	"	"	"		V_{IH1}			"						"	"	"	1Y	"	"	"
		"	3	"	"	"			V_{IH1}		"						"	"	"	1Y	"	"	"
		"	4	"	"	"				V_{IH1}	"						"	"	"	1Y	"	"	"
		"	5	"	"	"					"	V_{IH1}					"	"	"	2Y	"	"	"
		"	6	"	"	"					"		V_{IH1}				"	"	"	2Y	"	"	"
		"	7	"	"	"					"			V_{IH1}			"	"	"	2Y	"	"	"
		"	8	"	"	"					"				V_{IH1}		"	"	"	2Y	"	"	"
		"	9	"	"	"					"					V_{IH1}	"	"	"	2Y	"	"	"
		"	10	"	"	"	V_{IL1}				"						"	"	"	$1\overline{Y}$	"	"	"
		"	11	"	"	"		V_{IL1}			"						"	"	"	$1\overline{Y}$	"	"	"
		"	12	"	"	"			V_{IL1}		"						"	"	"	$1\overline{Y}$	"	"	"
		"	13	"	"	"				V_{IL1}	"						"	"	"	$1\overline{Y}$	"	"	"
		"	14	"	"	"					"	V_{IL1}					"	"	"	$2\overline{Y}$	"	"	"
		"	15	"	"	"					"		V_{IL1}				"	"	"	$2\overline{Y}$	"	"	"
		"	16	"	"	"					"			V_{IL1}			"	"	"	$2\overline{Y}$	"	"	"
		"	17	"	"	"					"				V_{IL1}		"	"	"	$2\overline{Y}$	"	"	"
		"	18	"	"	"					"					V_{IL1}	"	"	"	$2\overline{Y}$	"	"	"
2		Same tests and terminal conditions as for subgroup 1, except Tc = -125°C and limits as shown.																			-0.825	-0.630	V
3		Same tests and terminal conditions as for subgroup 1, except Tc = -55°C and limits as shown.																			-1.080	-0.880	V
1 Tc = 25°C	V_{OL}	3007	19	GND	LD_1	LD_1	V_{IL1}				"						LD_1	LD_1	GND	1Y	-1.850	-1.620	V
		"	20	"	"	"		V_{IL1}			"						"	"	"	1Y	"	"	"
		"	21	"	"	"			V_{IL1}		"						"	"	"	1Y	"	"	"
		"	22	"	"	"				V_{IL1}	"						"	"	"	1Y	"	"	"
		"	23	"	"	"					"	V_{IL1}					"	"	"	2Y	"	"	"
		"	24	"	"	"					"		V_{IL1}				"	"	"	2Y	"	"	"
		"	25	"	"	"					"			V_{IL1}			"	"	"	2Y	"	"	"
		"	26	"	"	"					"				V_{IL1}		"	"	"	2Y	"	"	"
		"	27	"	"	"					"					V_{IL1}	"	"	"	2Y	"	"	"
		"	28	"	"	"	V_{IH1}				E_1						"	"	"	$1\overline{Y}$	"	"	"
		"	29	"	"	"		V_{IH1}			"						"	"	"	$1\overline{Y}$	"	"	"
		"	30	"	"	"			V_{IH1}		"						"	"	"	$1\overline{Y}$	"	"	"
		"	31	"	"	"				V_{IH1}	"						"	"	"	$1\overline{Y}$	"	"	"
		"	32	"	"	"					"	V_{IH1}					"	"	"	$2\overline{Y}$	"	"	"
		"	33	"	"	"					"		V_{IH1}				"	"	"	$2\overline{Y}$	"	"	"
		"	34	"	"	"					"			V_{IH1}			"	"	"	$2\overline{Y}$	"	"	"
		"	35	"	"	"					"				V_{IH1}		"	"	"	$2\overline{Y}$	"	"	"
		"	36	"	"	"					"					V_{IH1}	"	"	"	$2\overline{Y}$	"	"	"
2		Same tests and terminal conditions as for subgroup 1, except Tc = 125°C and limits as shown.																			-1.820	-1.545	V
3		Same tests and terminal conditions as for subgroup 1, except Tc = -55°C and limits as shown.																			-1.920	-1.655	V
1	V_{OTH}		37	GND	LD_1	LD_1	V_{ITH}				E_1						LD_1	LD_1	GND	1Y	-0.950		V
			38	"	"	"		V_{ITH}			"						"	"	"	1Y	"		"
			39	"	"	"			V_{ITH}		"						"	"	"	1Y	"		"
			40	"	"	"				V_{ITH}	"						"	"	"	1Y	"		"
			41	"	"	"					"	V_{ITH}					"	"	"	2Y	"		"
			42	"	"	"					"		V_{ITH}				"	"	"	2Y	"		"
			43	"	"	"					"			V_{ITH}			"	"	"	2Y	"		"
			44	"	"	"					"				V_{ITH}		"	"	"	2Y	"		"
			45	"	"	"					"					V_{ITH}	"	"	"	2Y	"		"
2		Same tests and terminal conditions as for subgroup 1, except Tc = 125°C and limits as shown.																			-0.845		V
3		Same tests and terminal conditions as for subgroup 1, except Tc = -55°C and limits as shown.																			-1.100		V

TABLE III. Group A inspection for device type 06 - Continued.
For terminal conditions see table IIIA. Terminals not designated are open.

Subgroup	Symbol	MIL-STD-883 method	Case E	1	2	3	4	5	6	7	8	9	10	11	12	13	14	15	16	Measured terminal	Limits		Unit
			Case F	5	6	7	8	9	10	11	12	13	14	15	16	1	2	3	4				
			Case 2	2	3	4	5	7	8	9	10	12	13	14	15	17	18	19	20				
			Test no.	V_{CC1}	1Y	$1\overline{Y}$	1A	1B	1C	1D	V_{EE}	2A	2B	2C	2D	2E	$2\overline{Y}$	2Y	V_{CC2}		Min	Max	
1 Tc = 25°C	V_{OTH}		46	GND	LD_1	LD_1	V_{ITL}				E_1						LD_1	LD_1	GND	$1\overline{Y}$	-0.950		V
			47	"	"	"		V_{ITL}			"						"	"	"	$1\overline{Y}$	"		"
			48	"	"	"			V_{ITL}		"						"	"	"	$1\overline{Y}$	"		"
			49	"	"	"				V_{ITL}	"						"	"	"	$1\overline{Y}$	"		"
			50	"	"	"					"	V_{ITL}					"	"	"	$2\overline{Y}$	"		"
			51	"	"	"					"		V_{ITL}				"	"	"	$2\overline{Y}$	"		"
			52	"	"	"					"			V_{ITL}			"	"	"	$2\overline{Y}$	"		"
			53	"	"	"					"				V_{ITL}		"	"	"	$2\overline{Y}$	"		"
			54	"	"	"					"					V_{ITL}	"	"	"	$2\overline{Y}$	"		"
2		Same tests and terminal conditions as for subgroup 1, except Tc = 125°C and limits as shown.																			-0.845		V
3		Same tests and terminal conditions as for subgroup 1, except Tc = -55°C and limits as shown.																			-1.100		V
1 Tc = 25°C	V_{OTL}		55	GND	LD_1	LD_1	V_{ITL}				E_1						LD_1	LD_1	GND	1Y		-1.600	V
			56	"	"	"		V_{ITL}			"						"	"	"	1Y		"	"
			57	"	"	"			V_{ITL}		"						"	"	"	1Y		"	"
			58	"	"	"				V_{ITL}	"						"	"	"	1Y		"	"
			59	"	"	"					"	V_{ITL}					"	"	"	2Y		"	"
			60	"	"	"					"		V_{ITL}				"	"	"	2Y		"	"
			61	"	"	"					"			V_{ITL}			"	"	"	2Y		"	"
			62	"	"	"					"				V_{ITL}		"	"	"	2Y		"	"
			63	"	"	"					"					V_{ITL}	"	"	"	2Y		"	"
			64	"	"	"	V_{ITH}				"						"	"	"	$1\overline{Y}$		"	"
			65	"	"	"		V_{ITH}			"						"	"	"	$1\overline{Y}$		"	"
			66	"	"	"			V_{ITH}		"						"	"	"	$1\overline{Y}$		"	"
			67	"	"	"				V_{ITH}	"						"	"	"	$1\overline{Y}$		"	"
			68	"	"	"					"	V_{ITH}					"	"	"	$2\overline{Y}$		"	"
			69	"	"	"					"		V_{ITH}				"	"	"	$2\overline{Y}$		"	"
			70	"	"	"					"			V_{ITH}			"	"	"	$2\overline{Y}$		"	"
			71	"	"	"					"				V_{ITH}		"	"	"	$2\overline{Y}$		"	"
			72	"	"	"					"					V_{ITH}	"	"	"	$2\overline{Y}$		"	"
2		Same tests and terminal conditions as for subgroup 1, except Tc = 125°C and limits as shown.																				-1.525	V
3		Same tests and terminal conditions as for subgroup 1, except Tc = -55°C and limits as shown.																				-1.635	V
1 Tc = 25°C	I_{EE}	3005	73	GND							E_1									V_{EE}		-14	mA
2		Same tests and terminal conditions as for subgroup 1, except Tc = 125°C and limits as shown.																				-16	mA
3		Same tests and terminal conditions as for subgroup 1, except Tc = -55°C and limits as shown.																				-16	mA
1 Tc = 25°C	I_{IH1}	3009	74	GND			V_{IH1}				E_1								GND	1A		265	µA
		"	75	"				V_{IH1}			"								"	1B		"	"
		"	76	"					V_{IH1}		"								"	1C		"	"
		"	77	"						V_{IH1}	"								"	1D		"	"
		"	78	"							"	V_{IH1}							"	2A		"	"
		"	79	"							"		V_{IH1}						"	2B		"	"
		"	80	"							"			V_{IH1}					"	2C		"	"
		"	81	"							"				V_{IH1}				"	2D		"	"
		"	82	"							"					V_{IH1}			"	2E		"	"
2		Same tests and terminal conditions as for subgroup 1, except Tc = 125°C and limits as shown.																				450	µA
3		Same tests and terminal conditions as for subgroup 1, except Tc = -55°C and limits as shown.																				450	µA

TABLE III. Group A inspection for device type 06 - Continued.
For terminal conditions see table IIIA. Terminals not designated are open.

Subgroup	Symbol	MIL-STD-883 method	Case E	1	2	3	4	5	6	7	8	9	10	11	12	13	14	15	16	Measured terminal	Limits		Unit
			Case F	5	6	7	8	9	10	11	12	13	14	15	16	1	2	3	4				
			Case 2	2	3	4	5	7	8	9	10	12	13	14	15	17	18	19	20				
			Test no.	V_{CC1}	1Y	$1\overline{Y}$	1A	1B	1C	1D	V_{EE}	2A	2Y	$2\overline{Y}$	$3\overline{Y}$	3Y	$2\overline{Y}$	2Y	V_{CC2}		Min	Max	
1 Tc = 25°C	I_{IL}	3009	83	GND			V_{IL1}				E_1								GND	1A	0.5		µA
		"	84	"				V_{IL1}			"								"	1B	"		"
		"	85	"					V_{IL1}		"								"	1C	"		"
		"	86	"						V_{IL1}	"								"	1D	"		"
		"	87	"							"	V_{IL1}							"	2A	"		"
		"	88	"							"		V_{IL1}						"	2B	"		"
		"	89	"							"			V_{IL1}					"	2C	"		"
		"	90	"							"				V_{IL1}				"	2D	"		"
		"	91	"							"					V_{IL1}			"	2E	"		"
2		Same tests and terminal conditions as for subgroup 1, except Tc = -125°C and limits as shown.																			0.3		µA
3		Same tests and terminal conditions as for subgroup 1, except Tc = -55°C and limits as shown.																			0.5		µA
	t_{TLH}	3004	92	E_3	OUT	LD_2			IN		E_2						LD_2	LD_2	E_3	1Y	1.1	3.3	ns
		"	93	"	LD_2	OUT			IN		"						"	"	"	$1\overline{Y}$	"	"	"
		"	94	"	"	LD_2					"			IN			"	OUT	"	2Y	"	"	"
		"	95	"	"	"					"			IN			OUT	LD_2	"	$2\overline{Y}$	"	"	"
10		Same tests and terminal conditions as for subgroup 9, except Tc = -125°C and limits as shown.																			1.0	4.0	ns
11		Same tests and terminal conditions as for subgroup 9, except Tc = -55°C and limits as shown.																			1.0	4.0	ns
9 Tc = 25°C	t_{THL}	3004	96	E_3	OUT	LD_2			IN		E_2						LD_2	LD_2	E_3	1Y	1.1	3.3	ns
		"	97	"	LD_2	OUT			IN		"						"	"	"	$1\overline{Y}$	"	"	"
		"	98	"	"	LD_2					"			IN			"	OUT	"	2Y	"	"	"
		"	99	"	"	"					"			IN			OUT	LD_2	"	$2\overline{Y}$	"	"	"
10		Same tests and terminal conditions as for subgroup 9, except Tc = -125°C and limits as shown.																			1.0	4.0	ns
11		Same tests and terminal conditions as for subgroup 9, except Tc = -55°C and limits as shown.																			1.0	4.0	ns
9 Tc = 25°C	t_{PLH}	3003	100	E_3	OUT	LD_2			IN		E_2						LD_2	LD_2	E_3	1Y	1.0	2.9	ns
		"	101	"	LD_2	OUT			IN		"						"	"	"	$1\overline{Y}$	"	"	"
		"	102	"	"	LD_2					"			IN			"	OUT	"	2Y	"	"	"
		"	103	"	"	"					"			IN			OUT	LD_2	"	$2\overline{Y}$	"	"	"
10		Same tests and terminal conditions as for subgroup 9, except Tc = -125°C and limits as shown.																			1.0	3.7	ns
11		Same tests and terminal conditions as for subgroup 9, except Tc = -55°C and limits as shown.																			1.0	3.7	ns
9 Tc = 25°C	t_{PHL}	3003	104	E_3	OUT	LD_2			IN		E_2						LD_2	LD_2	E_3	1Y	1.0	2.9	ns
		"	105	"	LD_2	OUT			IN		"						"	"	"	$1\overline{Y}$	"	"	"
		"	106	"	"	LD_2					"			IN			"	OUT	"	2Y	"	"	"
		"	107	"	"	"					"			IN			OUT	LD_2	"	$2\overline{Y}$	"	"	"
10		Same tests and terminal conditions as for subgroup 9, except Tc = 125°C and limits as shown.																			1.0	3.7	ns
11		Same tests and terminal conditions as for subgroup 9, except Tc = -55°C and limits as shown.																			1.0	3.7	ns

5. PACKAGING

5.1 Packaging requirements. For acquisition purposes, the packaging requirements shall be as specified in the contract or order (see 6.2). When actual packaging of materiel is to be performed by DoD or in-house contractor personnel, these personnel need to contact the responsible packaging activity to ascertain packaging requirements. Packaging requirements are maintained by the Inventory Control Point's packaging activity within the Military Service or Defense Agency, or within the military service's system command. Packaging data retrieval is available from the managing Military Department's or Defense Agency's automated packaging files, CD-ROM products, or by contacting the responsible packaging activity.

6. NOTES
(This section contains information of a general or explanatory nature that may be helpful, but is not mandatory.)

6.1 Intended use. Microcircuits conforming to this specification are intended for original equipment design applications and logistic support of existing equipment.

6.2 Acquisition requirements. Acquisition documents should specify the following:

a. Title, number, and date of the specification.

b. PIN and compliance identifier, if applicable (see 1.2).

c. Requirements for delivery of one copy of the conformance inspection data pertinent to the device inspection lot to be supplied with each shipment by the device manufacturer, if applicable.

d. Requirements for certificate of compliance, if applicable.

e. Requirements for notification of change of product or process to contracting activity in addition to notification to the qualifying activity, if applicable.

f. Requirements for failure analysis (including required test condition of method 5003 of MIL-STD-883), corrective action, and reporting of results, if applicable.

g. Requirements for product assurance options.

h. Requirements for special carriers, lead lengths, or lead forming, if applicable. These requirements should not affect the part number. Unless otherwise specified, these requirements will not apply to direct purchase by or direct shipment to the Government.

i. Requirements for "JAN" marking.

j. Packaging requirements (see 5.1).

6.3 Superseding information. The requirements of MIL-M-38510 have been superseded to take advantage of the available Qualified Manufacturer Listing (QML) system provided by MIL-PRF-38535. Previous references to MIL-M-38510 in this document have been replaced by appropriate references to MIL-PRF-38535. All technical requirements now consist of this specification and MIL-PRF-38535. The MIL-M-38510 specification sheet number and PIN have been retained to avoid adversely impacting existing government logistics systems and contractor's parts lists.

6.4 Qualification. With respect to products requiring qualification, awards will be made only for products which are, at the time of award of contract, qualified for inclusion in Qualified Manufacturers List QML-38535 whether or not such products have actually been so listed by that date. The attention of the contractors is called to these requirements, and manufacturers are urged to arrange to have the products that they propose to offer to the Federal Government tested for qualification in order that they may be eligible to be awarded contracts or purchase orders for the products covered by this specification. Information pertaining to qualification of products may be obtained from DSCC-VQ, P.O. Box 3990, Columbus, Ohio 43218-3990.

6.5 Abbreviations, symbols, and definitions. The abbreviations, symbols, and definitions used herein are defined in MIL-PRF-38535, MIL-HDBK-1331, and as follows:

GND ..... Ground zero voltage potential
V_{OTH} ..... High-level threshold output voltage
V_{OTL} ..... Low-level threshold output voltage
V_{ITH} ..... High-level threshold input voltage
V_{ITL} ..... Low-level threshold input voltage
V_{EEL} ..... Shifted power supply voltage for the purpose of ac testing
T_J ..... Circuit junction temperature
T_C ..... Case operating temperature
P_D ..... Circuit power dissipation
θ_{JA} ..... Junction to ambient thermal resistance in °C per watt
θ_{JC} ..... Junction to case thermal resistance

6.6 Logistic support. Lead materials and finishes (see 3.4) are interchangeable. Unless otherwise specified, microcircuits acquired for Government logistic support will be acquired to device class B (see 1.2.2), lead material and finish A (see 3.4). Longer length leads and lead forming should not affect the part number.

6.7 Substitutability. The cross-reference information below is presented for the convenience of users. Microcircuits covered by this specification will functionally replace the listed generic-industry type. Generic-industry microcircuit types may not have equivalent operational performance characteristics across military temperature ranges or reliability factors equivalent to MIL-M-35810 device types and may have slight physical variations in relation to case size. The presence of this information should not be deemed as permitting substitution of generic-industry types for MIL-M-38510 types or as a waiver of any of the provisions of MIL-PRF-38535.

Military device type	Generic-industry type
01	10501
02	10502
03	10505
04	10506
05	10507
06	10509

6.8 Environmental variations versus device testing and operation. Different nominal values of air velocity and temperature may be selected for device tests and in-system operation. However, when this occurs or when air velocity and temperature gradients cause a shift in device junction temperature greater than ± 2°C, the device output voltages and input forcing functions assume significant new values. Based on the typical thermal resistance curve of figure 7, the new values can be determined from the procedures in 6.8.1.

6.8.1 Procedures for determining new values of device output voltage and input forcing function.

a. Determine device power dissipation by power supply drain current and the following equation:
P_D (max) = I_{EE}(max) x V_{EE} + 9.7 mW x number of outputs.

b. Using this maximum power dissipation, enter figures 4 and 5 as applicable for the case outline and determine the junction temperature deviation (ΔT_J) for the selected nominal air velocity.

c. If the actual ambient test or system temperatures are other than those specified (-55°C, 25°C, 125°C), the difference between the actual and specified values shall be algebraically added to the ΔT_J for the air velocity determined in (b) above to obtain a ΔT_J (total).

d. Using the appropriate adjustment coefficients from figure 6 multiplied by the ΔT_J (total), determine the correct amount of compensation to be applied to each of the forcing functions and voltage limits under the actual test or system conditions. (see 6.8.2 for two examples of determining compensation)

6.8.2 Test limit compensation examples.

a. A device which has a power dissipation of 100 mW in case F is to be tested under a zero airflow condition. on figure 5, ΔT_J between 500 linear ft/min and zero airflow is +4°C. In order to adjust the various parameter limits, use figure 6 which defines the limit adjustment coefficients for ΔT_J. To adjust V_{OH}(max) at -55°C, use the $+\Delta T_J$ column of the -55°C portion of figure 6 and locate the coefficient corresponding to V_{OH}(max). This value is 1.38 mV/°C. Multiply the ΔT_J by the coefficient and algebraically add it to the -55°C V_{OH}(max) limit from table III.

V_{OH}(max) (adjusted limit) = (+4°C) x (1.38 mV/°C) + (-830 mV)
= 5.52 mV -830mV = -824.48 mV
Use –824 mV

Follow the same procedure to adjust the remaining parameters at -55°C as well as all parameters at 25°C and 125°C.

b. A device with a power dissipation of 150 mW in case E is to be tested at an airflow of 200 linear ft/min and the 25°C testing is to be accomplished at an ambient temperature of +20°C. On figure 4 ΔT_J due to airflow is +2°C. The ΔT_J due to ambient temperature change is -5°C (25-20). Therefore the total ΔT_J = -5 +2 = -3°C. Using figure 6 find the 25°C, $-\Delta T_J$ column. To adjust the V_{OL} (max) locate the limit coefficient corresponding to V_{OL} (max) for a negative ΔT_J, this value is 0.44 mV/°C. Multiply the ΔT_J by the coefficient and algebraically add it to the +25°C V_{OL} (max) limit from table III.

V_{OL} (max) (adjusted limit) = (-3°C) x (0.44 mV/°C) + (-1620 mV)
= 1.32 mV – 1620 mV = -1621.32 mV
Use – 1621 mV

Follow the same procedure to adjust the remaining parameters at +25°C.

6.8.3 Maximum junction temperature. Under no circumstance should the devices be operated in an environment such that T_J as calculated by the following equation be allowed to exceed the maximum junction temperature of 1.3. $T_J = T_C + \theta J_A$ (TYP) x P_D (max). Typical junction to ambient thermal resistance θJ_A (TYP) varies as a function of air velocity as shown on figure 7.

6.9 Changes from previous issue. Marginal notations are not used in this revision to identify changes with respect to the previous issue due to the extensiveness of the changes.

Custodians:
Army - CR
Navy - EC
Air Force - 11
DLA - CC

Preparing activity:
DLA - CC

(Project 5962-2068)

Review activities:
Army - MI, SM
Navy - AS, CG, MC, SH, TD
Air Force - 03, 19, 99

NOTE: The activities listed above were interested in this document as of the date of this document. Since organizations and responsibilities can change, you should verify the currency of the information above using the ASSIST Online database at http://assist.daps.dla.mil .