INCH-POUND

MIL-M-38510/57F
21 January 2005

SUPERSEDING
MIL-M-38510/57E
30 November 1987

MILITARY SPECIFICATION
MICROCIRCUITS, DIGITAL, CMOS, STATIC SHIFT REGISTER, MONOLITHIC SILICON, POSITIVE LOGIC

Reactivated after 21 Jan. 2005 and may be used for new and existing designs and acquisitions.

This specification is approved for use by all Departments and Agencies of the Department of Defense.

The requirements for acquiring the product herein shall consist of this specification sheet and MIL-PRF 38535

1. SCOPE

1.1 Scope. This specification covers the detail requirements for monolithic silicon, CMOS, logic microcircuits. Two product assurance classes and a choice of case outlines, lead finishes, and radiation hardness assurance (RHA) are provided and are reflected in the complete Part or Identifying Number (PIN). For this product, the requirements of MIL-M-38510 have been superseded by MIL-PRF-38535 (see 6.3).

1.2 Part or identifying number (PIN). The PIN is in accordance with MIL-PRF-38535 and as specified herein.

1.2.1 Device types. The device types are as follows:

Device type	Circuit
01	Dual 4-stage/dual 5-stage static shift register
02	8-stage synchronous parallel or serial input/serial output static shift register
03	Dual 4-stage serial input/parallel output static shift register
04	8-stage asynchronous parallel input/serial output or synchronous serial input/serial output static shift register
05	64-stage static shift register
06	8-stage bidirectional parallel/serial input/output bus register
51	Dual 4-stage/dual 5-stage static shift register
52	8-stage synchronous parallel or serial input/serial output static shift register
53	Dual 4-stage serial input/parallel output static shift register
54	8-stage asynchronous parallel input/serial output or synchronous serial input/serial output static shift register
55	64-stage static shift register
56	8-stage bi-directional parallel/serial input/output bus register

1.2.2 Device class. The device class is the product assurance level as defined in MIL-PRF-38535.

1.2.3 Case outlines. The case outlines are as designated in MIL-STD-1835 and as follows:

Outline letter	Descriptive designator	Terminals	Package style
A	GDFP5-F14 or CDFP6-F14	14	Flat pack
C	GDIP1-T14 or CDIP2-T14	14	Dual-in-line
D	GDFP1-F14 or CDFP2-F14	14	Flat pack
E	GDIP1-T16 or CDIP2-T16	16	Dual-in-line
F	GDFP2-F16 or CDFP3-F16	16	Flat pack

Comments, suggestions, or questions on this document should be addressed to: Commander, Defense Supply Center Columbus, ATTN: DSCC-VAC, P.O. Box 3990, Columbus, OH 43218-3990, or email CMOS@dscc.dla.mil. Since contact information can change, you may want to verify the currency of this address information using the ASSIST Online database at http://assist.daps.dla.mil.

J	GDIP1-T24 or CDIP2-T24	24	Dual-in-line
K	GDFP2-F24 or CDFP3-F24	24	Flat pack
N	CDFP4-F16	16	Flat pack
T	CDFP3-F14	14	Flat pack
X 1/ 2/	GDFP5-F14 or CDFP6-F14	14	Flat pack, except A dimension equals 0.100” (2.54 mm) max
Y 1/ 2/	GDFP1-F14 or CDFP2-F14	14	Flat pack, except A dimension equals 0.100” (2.54 mm) max
Z 1/ 2/	GDFP2-F16 or CDFP3-F16	16	Flat pack, except A dimension equals 0.100” (2.54 mm) max
U 1/ 2/	GDFP2-F24 or CDFP3-F24	24	Flat pack, except A dimension equals 0.100” (2.54 mm) max

1.3 Absolute maximum ratings.

Supply voltage range (V_{DD} - V_{SS}):
Device types 01-06 ..... -0.5 V dc to +15.5 V dc
Device types 51-56 ..... -0.5 V dc to +18.0 V dc
Input current (each input) ..... ±10 mA
Input voltage range ..... $(V_{SS} - 0.5\ V) \leq V_I \leq (V_{DD} + 0.5\ V)$
Storage temperature range (T_{STG}) ..... -65° to +175°C
Maximum power dissipation (P_D) ..... 200 mW
Lead temperature (soldering, 10 seconds) ..... +300°C
Thermal resistance, junction to case (θ_{JC}) ..... See MIL-STD-1835
Junction temperature (T_J) ..... 175°C

1.4 Recommended operating conditions.

Supply voltage range (V_{DD} - V_{SS}):
Device types 01-06 ..... 4.5 V dc to 12.5 V dc
Device types 51-56 ..... 4.5 V dc to 15.0 V dc
Input low voltage range (V_{IL}):
Device types 01-06 ..... 0.0 V to 0.85 V dc @ V_{DD} = 5.0 V dc
0.0 V to 2.1 V dc @ V_{DD} = 12.5 V dc
Device types 51-56 ..... V_{OL} = 10% V_{DD}, V_{OH} = 90% V_{DD}
0.0 V to 1.5 V dc @ V_{DD} = 5.0 V dc
0.0 V to 2.0 V dc @ V_{DD} = 10.0 V dc
0.0 V to 4.0 V dc @ V_{DD} = 15.0 V dc
Input high voltage range (V_{IH}):
Device types 01-06 ..... 3.95 V to 5.0 V dc @ V_{DD} = 5.0 V dc
10 V to 12.5 V dc @ V_{DD} = 12.5 V dc
Device types 51-56 ..... V_{OL} = 10% V_{DD}, V_{OH} = 90% V_{DD}
3.5 V to 5.0 V dc @ V_{DD} = 5.0 V dc
8.0 V to 10.0 V dc @ V_{DD} = 10.0 V dc
11.0 V to 15.0 V dc @ V_{DD} = 15.0 V dc
Load capacitance ..... 50 pF maximum
Case operating temperature range (T_C) ..... -55°C to +125°C

1/ As an exception to nickel plate or undercoating paragraph of MIL-PRF-38535, appendix A, for case outlines X, Y, Z, and U only, the leads of bottom brazed ceramic packages (i.e., configuration 2 of case outlines A, D, F, or K) may have electroless nickel undercoating which is 50 to 200 microinches (1.27 to 5.08 μm) thick provided the lead finish is hot solder dip (i.e., finish letter A) and provided that, after any lead forming, an additional hot solder dip coating is applied which extends from the outer tip of the lead to no more than 0.015 inch (0.38 mm) from the edge.

2/ For bottom or side brazed packages, case outlines X, Y, Z, and U only, the S_1 dimension may go to .000 inch (.00 mm) minimum.

2. APPLICABLE DOCUMENTS

2.1 General. The documents listed in this section are specified in sections 3, 4, or 5 of this specification. This section does not include documents cited in other sections of this specification or recommended for additional information or as examples. While every effort has been made to ensure the completeness of this list, document users are cautioned that they must meet all specified requirements of documents cited in sections 3, 4, or 5 of this specification, whether or not they are listed.

2.2 Government documents.

2.2.1 Specifications and Standards. The following specifications and standards form a part of this specification to the extent specified herein. Unless otherwise specified, the issues of these documents are those cited in the solicitation or contract.

DEPARTMENT OF DEFENSE SPECIFICATION

MIL-PRF-38535 - Integrated Circuits (Microcircuits) Manufacturing, General Specification for.

DEPARTMENT OF DEFENSE STANDARDS

MIL-STD-883 - Test Method Standard Microcircuits.
MIL-STD-1835 - Interface Standard Electronic Component Case Outlines.

(Copies of these documents are available online at http://assist.daps.dla.mil/quicksearch/ or http://assist.daps.dla.mil or from the Standardization Document Order Desk, 700 Robbins Avenue, Building 4D, Philadelphia, PA 19111-5094.)

2.3 Order of precedence. In the event of a conflict between the text of this document and the references cited herein, the text of this document takes precedence. Nothing in this document, however, supersedes applicable laws and regulations unless a specific exemption has been obtained.

3. REQUIREMENTS

3.1 Qualification. Microcircuits furnished under this specification shall be products that are manufactured by a manufacturer authorized by the qualifying activity for listing on the applicable qualified manufacturers list before contract award (see 4.3 and 6.4).

3.2 Item requirements. The individual item requirements shall be in accordance with MIL-PRF-38535 and as specified herein or as modified in the device manufacturer's Quality Management (QM) plan. The modification in the QM plan shall not affect the form, fit, or function as described herein.

3.3 Design, construction, and physical dimensions. The design, construction, and physical dimensions shall be as specified in MIL-PRF-38535 and herein. Although eutectic die bonding is preferred, epoxy die bonding may be performed. However, the resin used shall be Dupont 5504 Conductive Silver Paste, or equivalent, which is cured at 200°C ±10°C for a minimum of 2 hours. The use of equivalent epoxies or cure cycles shall be approved by the qualifying activity. Equivalency shall be demonstrated in data submitted to the qualifying activity for verification.

3.3.1 Terminal connections. The terminal connections shall be as specified on figure 1.

3.3.2 Logic diagrams. The logic diagrams shall be as specified on figure 2.

3.3.3 Truth tables. The truth tables shall be as specified on figure 3.

3.3.4 Switching time test circuit and waveforms. The switching time test circuit and waveforms shall be as specified on figure 4.

3.3.5 Schematic circuits. The schematic circuits shall be maintained by the manufacturer and made available to the qualifying activity or preparing activity upon request.

3.3.6 Case outlines. The case outlines shall be as specified in 1.2.3.

3.4 Lead material and finish. The lead material and finish shall be in accordance with MIL-PRF-38535 (see 6.6).

3.5 Electrical performance characteristics. Unless otherwise specified, the electrical performance characteristics are as specified in table I, and apply over the full recommended case operating temperature range.

3.6 Electrical test requirements. The electrical test requirements for each device class shall be the subgroups specified in table II. The electrical tests for each subgroup are described in table III.

3.7 Marking. Marking shall be in accordance with MIL-PRF-38535.

3.7.1 Radiation hardness assurance identifier. The radiation hardness assurance identifier shall be in accordance with MIL-PRF-38535 and 4.5.4 herein.

3.8 Microcircuit group assignment. The devices covered by this specification shall be in microcircuit group number 40 (see MIL-PRF-38535, appendix A).

TABLE I. Electrical performance characteristics.

Test	Symbol	Conditions 1/ V_{SS} = 0 V -55°C ≤ T_C ≤ +125°C Unless otherwise specified		Device type	Limits Min	Limits Max	Unit
Positive clamping input to V_{DD}	$V_{IC(POS)}$	T_C = 25°C, V_{DD} = GND, V_{SS} = Open, Output = Open, I_I = 1 mA		All		+1.5	V dc
Negative clamping input to V_{DD}	$V_{IC(NEG)}$	T_C = 25°C, V_{DD} = Open, V_{SS} = GND, Output = Open, I_I = -1 mA		All		-6.0	V dc
Quiescent supply current	I_{SS}	Any combination of inputs	V_{DD} = 15 V dc	01		3.0	μA
				02, 03, 04, 06		5.0	
				05		20	
			V_{DD} = 18 V dc	51		3.0	
				52, 53, 54, 56		5.0	
				55		20.0	
High level output voltage, any output	V_{OH1}	V_{DD} = 5 V dc See table III	I_{OH} = -70 μA	01	4.5		V
any output			I_{OH} = -55 μA	02, 03, 04			
Q output			I_{OH} = -225 μA	05			
$\overline{Q}$ output			I_{OH} = -60 μA	05			
Delayed clock output			I_{OH} = -280 μA	05			
any output			I_{OH} = -35 μA	06			
High level output voltage	V_{OH2}	V_{DD} = 12.5 V dc See table III I_{OH} = 0 A		01, 02, 03, 04, 05, 06	11.25		V
High level output voltage	V_{OH3}	V_{DD} = 15 V dc See table III I_{OH} = 0 A		51, 52, 53, 54, 55, 56	14.95		V
Low level output voltage, any output	V_{OL1}	V_{DD} = 5 V dc See table III	I_{OL} = 85 μA	01, 02, 03, 04		0.50	V
Q output			I_{OL} = 900 μA	05			
$\overline{Q}$ output			I_{OL} = 60 μA	05			
Delayed clock output			I_{OL} = 280 μA	05			
any output			I_{OL} = 70 μA	06			
Low level output voltage	V_{OL2}	V_{DD} = 12.5 V dc See table III I_{OL} = 0 A		01, 02, 03, 04, 05, 06		1.25	V
Low level output voltage	V_{OL3}	V_{DD} = 15 V dc See table III I_{OL} = 0 A		51, 52, 53, 54, 55, 56		0.05	V
Output low (sink) current	I_{OL1}	V_{DD} = 5 V dc V_{OL} = 0.4 V dc V_{IN} = V_{SS}		51, 53 52, 54, 55, 56	0.36		mA dc
	I_{OL2}	V_{DD} = 15 V dc V_{OL} = 1.5 V dc V_{IN} = V_{SS}			2.40		

See footnotes at end of table.

TABLE I. Electrical performance characteristics – Continued.

Test	Symbol	Conditions 1/ V_{SS} = 0 V -55°C ≤ T_C ≤ 125°C Unless otherwise specified		Device type	Limits Min	Limits Max	Unit
Output high (source) current	I_{OH1}	V_{DD} = 5 V dc V_{OH} = 4.6 V dc V_{IN} = V_{DD}		51, 53 52, 54, 55, 56	-0.36		mA dc
	I_{OH2}	V_{DD} = 15 V dc V_{OH} = 13.5 V dc V_{IN} = V_{DD}			-2.4		
Input leakage current (high)	I_{IH} 2/	Measure inputs sequentially	V_{DD} = 15 V dc	01, 04, 05, 06,		45	nA
				02, 03		100	
			V_{DD} = 18 V dc	51, 52, 53, 55, 56		45	nA
				54		100	
Input leakage current (low)	I_{IL} 2/	Measure inputs sequentially	V_{DD} = 15 V dc	01, 04 05, 06		-45	nA
				02, 03		-100	
			V_{DD} = 18 V dc	51, 52, 53, 55, 56		-45	nA
				54		-100	
Input capacitance test	C_i	V_{DD} = 0 V dc, f = 1 MHz T_C = 25°C		01, 05		70	pF
				02, 03, 04, 06		12	
				56		7.5	
				51, 53 52, 54		12	
				55		70	
Propagation delay, high to low level (CLOCK to any output)	t_{PHL}	V_{DD} = 5.0 V dc		01	20	1200	ns
				51	20	560	
				06	13	1300	
				56	13	980	
(CLOCK or reset to output)				04	20	1465	
				54	20	490	
(Reset to output)				03	20	1465	
				53	20	490	
(CLOCK to Q output)				02	13	1465	
				52	13	450	
				03	20	1465	
				53	20	560	
				05	13	1590	
				55	13	840	
(CLOCK to $\overline{Q}$ output)				05	13	1980	
				55	13	840	
(CLOCK to delayed CLOCK output)				05	13	975	
				55	13	350	

See footnotes at end of table.

TABLE I. Electrical performance characteristics – Continued.

Test	Symbol	Conditions 1/ V_{SS} = 0 V -55°C ≤ T_C ≤ 125°C Unless otherwise specified	Device type	Limits Min	Limits Max	Unit
Propagation delay, low to high level (CLOCK to any output)	t_{PLH}	V_{DD} = 5.0 V dc	01	20	1200	ns
			51	20	560	
			06	13	1300	
			56	13	980	
(CLOCK or reset to output)			04	20	1465	
			54	20	490	
(CLOCK to Q output)			02	13	1465	
			52	13	450	
			03	20	1465	
			53	20	560	
			05	13	1590	
			55	13	840	
(CLOCK to $\overline{Q}$ output)			05	13	1980	
			55	13	840	
(CLOCK to delayed CLOCK output)			05	13	975	
			55	13	350	
Transition time, high to low level (Any output)	t_{THL}	V_{DD} = 5.0 V dc	01	13	1140	ns
			51	13	200	
			02	10	975	
			52,56	10	280	
			03	13	975	
			53,54	13	280	
			04	13	1050	
			06	10	1300	
(Q output)			05	10	435	
			55	10	280	
($\overline{Q}$ output)			05	10	2100	
			55	10	280	
(Delayed CLOCK output)			05	10	525	
			55	10	200	
Transition time, low to high level (Any output)	t_{TLH}		01	13	1140	
			51	13	200	
			02	10	1350	
			52,56	10	280	
			03	13	1465	
			53,54	13	280	
			04	13	1350	
			06	10	2300	
(Q output)			05	10	510	
			55	10	280	
($\overline{Q}$ output)			05	10	2100	
			55	10	280	
(Delayed CLOCK output)			05	10	525	
			55	10	200	

See footnotes at end of table.

TABLE I. Electrical performance characteristics – Continued.

Test	Symbol	Conditions 1/ V_{SS} = 0 V -55°C ≤ T_C ≤ 125°C Unless otherwise specified	Device type	Limits Min	Limits Max	Unit
Maximum CLOCK frequency	f_{CL}	V_{DD} = 5.0 V dc, C_L = 50 pF	01,02	700		kHz
			03,04	700		
			05	550		
			06	525		
			51	1.4		MHz
			52	1.2		
			53	1.5		
			54	1.0		
			55	800		kHz
			56	750		
Setup time	t_{SETUP}		01,51	115		ns
			53	150		
			02,03, 04	500		
			52,54	180		
			05	680		
			55	300		
			06	650		
			56	240		
Minimum CLOCK pulse width	t_p	V_{DD} = 5.0 V, C_L = 50 pF T_C = 25°C	01,04,06	330		
			02,03,05	400		
			51,54	200		
			52	180		
			53,56	250		
			55	300		
Minimum reset pulse width	$t_{p(RS)}$		03,05	400		ns
Minimum high level AE, P/S, A/S pulse width	t_{PH}		06,56	480		

1/ Complete terminal conditions shall be as specified in table III.
2/ Input current at one input node.

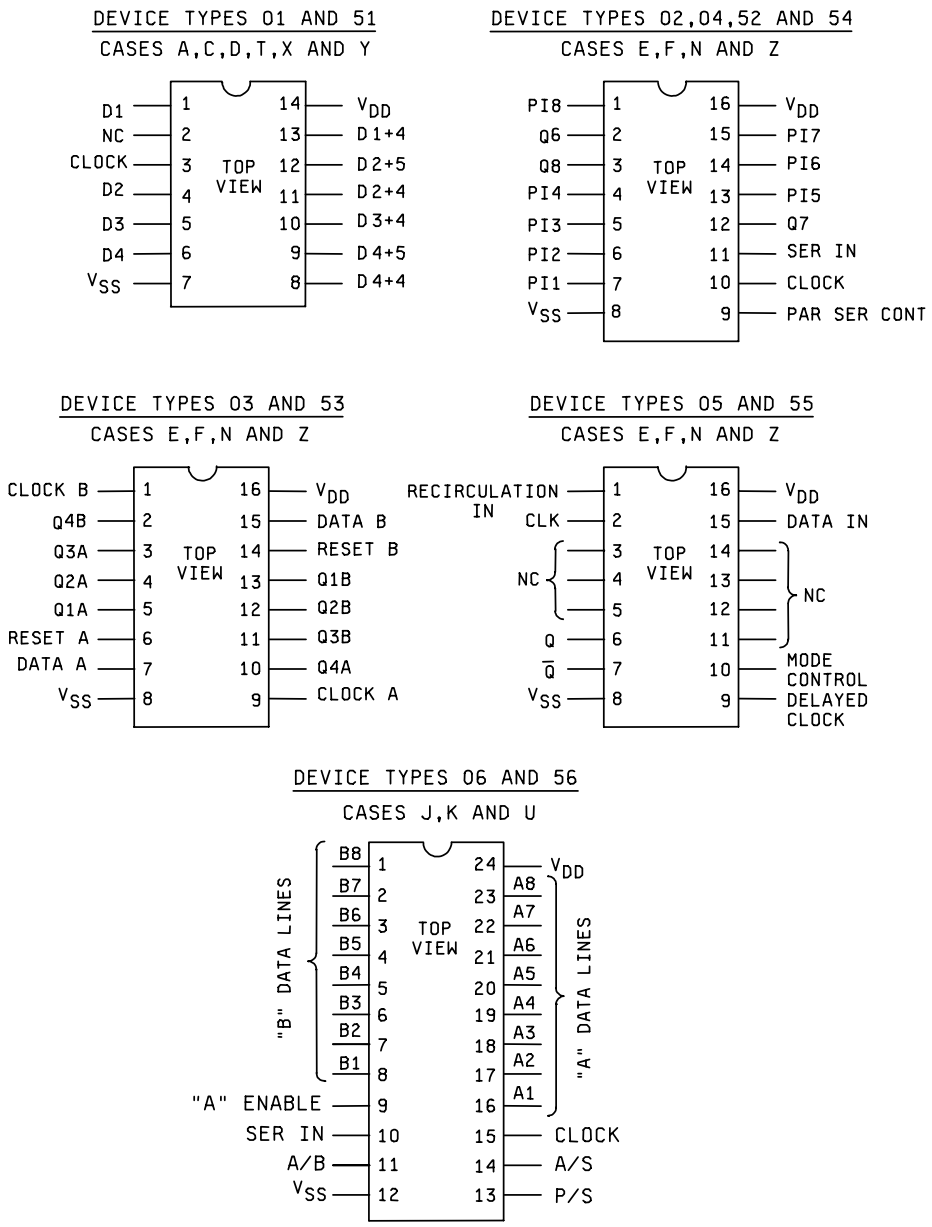

NC = No connection

FIGURE 1. Terminal connections.

DEVICE TYPES 01 AND 51

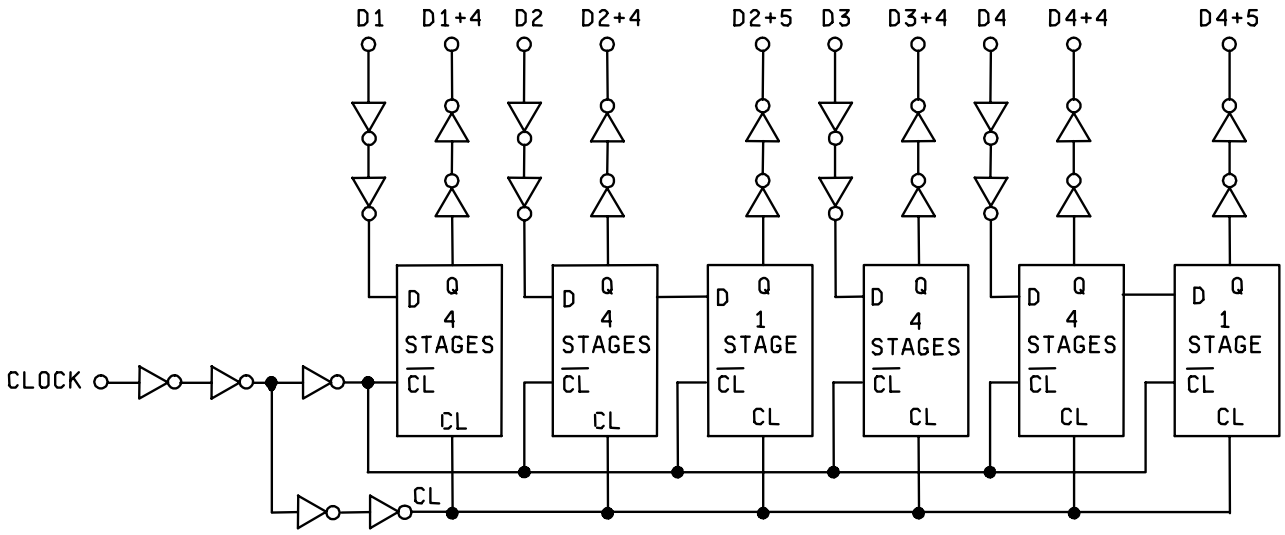

FIGURE 2. Logic diagrams.

DEVICE TYPES 02 AND 52

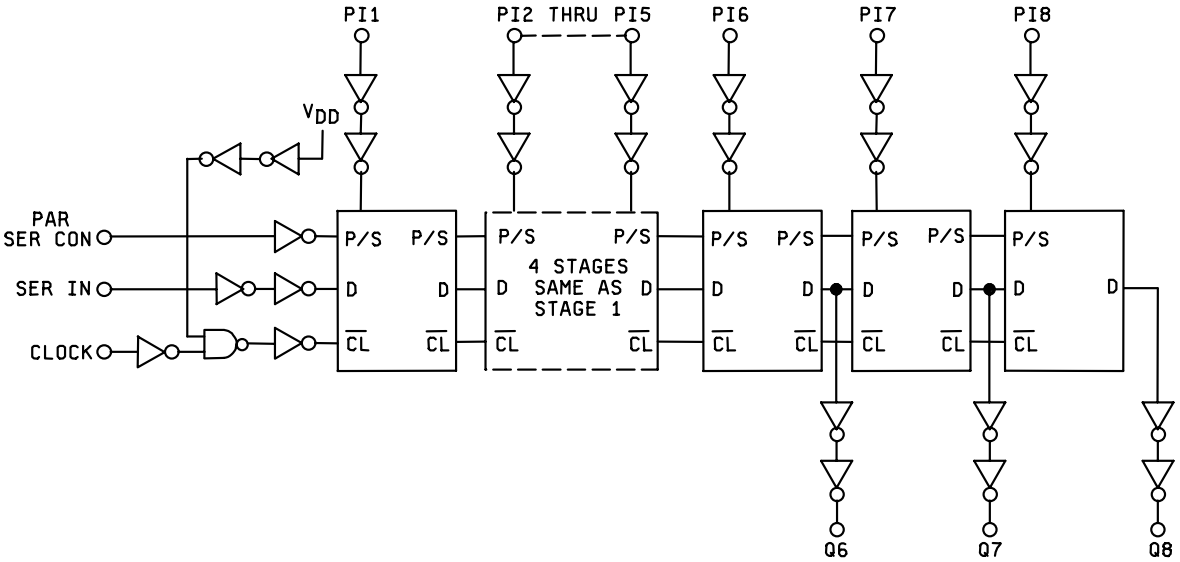

FIGURE 2. Logic diagrams – Continued.

DEVICE TYPES 03 AND 53

(1/2 SHOWN)

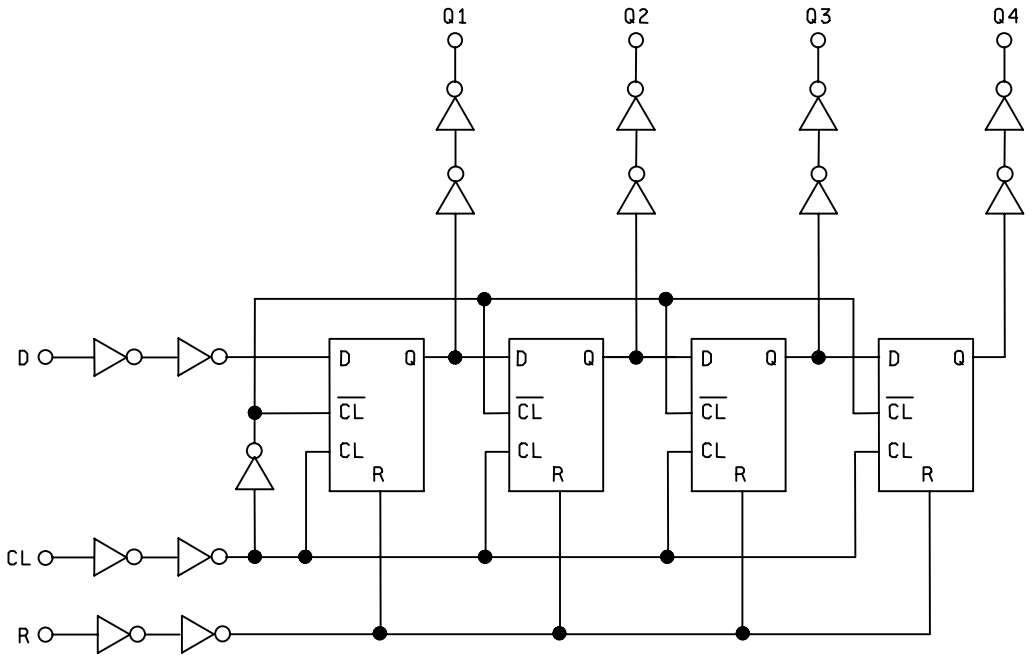

FIGURE 2. Logic diagrams - Continued.

DEVICE TYPES 04 AND 54

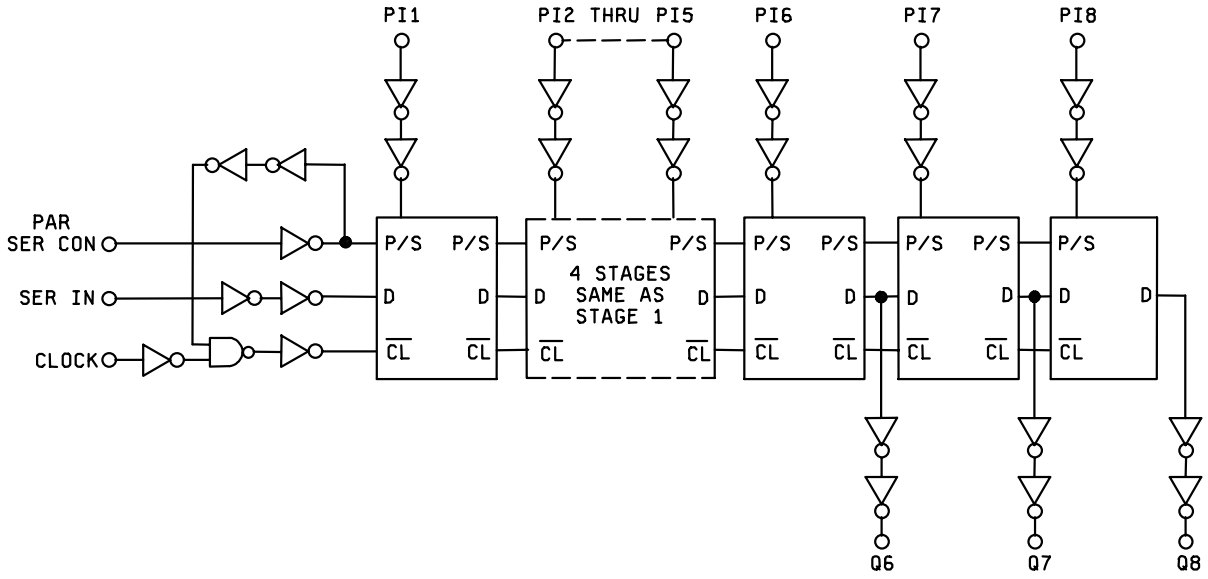

FIGURE 2. Logic diagrams - Continued.

DEVICE TYPES 05 AND 55

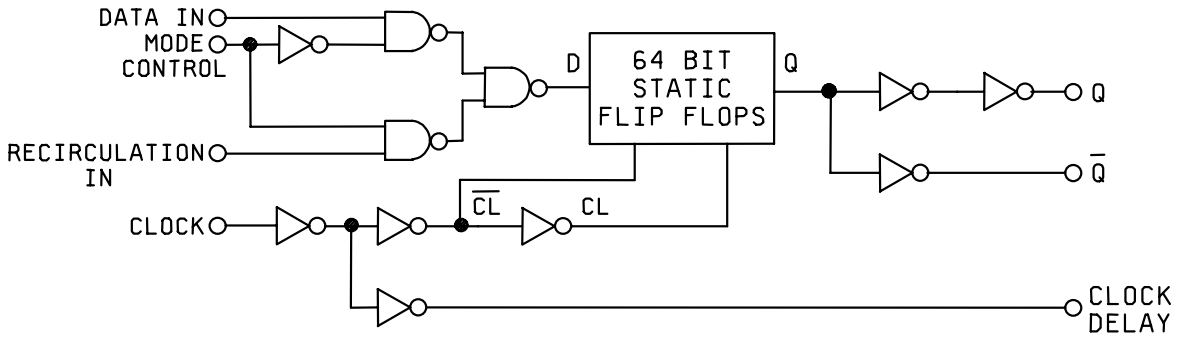

FIGURE 2. Logic diagrams - Continued.

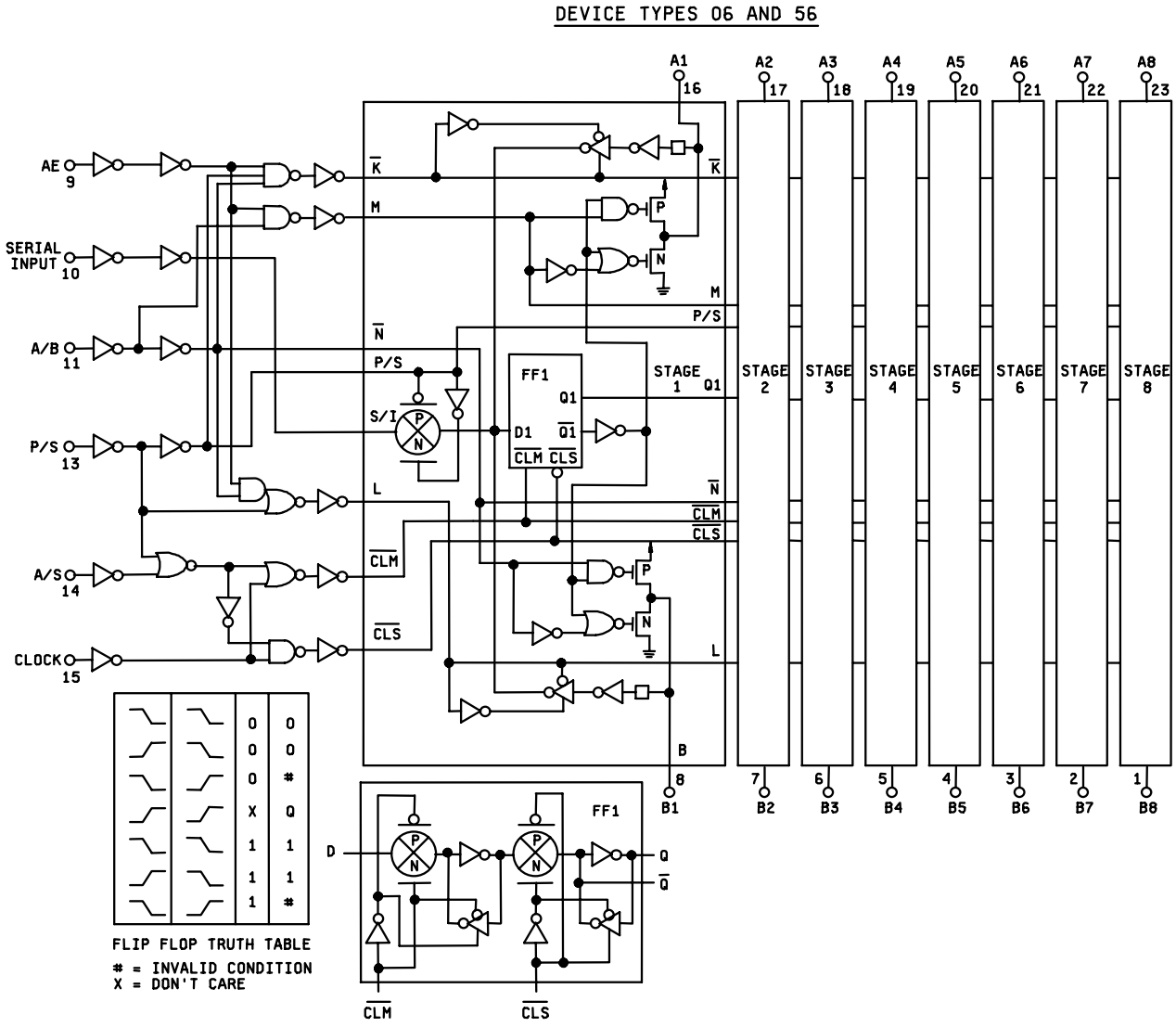

FIGURE 2. Logic diagrams - Continued.

Device types 01 and 51

Inputs		Output
D	CL (level change)	D+1
0	↓	0
1	↓	1
X	↑	NC

Positive Logic 0 ≈ V_{SS}.
Positive Logic 1 ≈ V_{DD}.
NC = No change.
↓ = Clock transition from high to low.
↑ = Clock transition from low to high.
X = Don't care.

Device types 02 and 52

Inputs					Output	
CL (level change)	Serial IN	PAR/SER control	PI-1	PI-n	Q1 (internal)	Qn
↑	X	1	0	0	0	0
↑	X	1	1	0	1	0
↑	X	1	0	1	0	1
↑	X	1	1	1	1	1
↑	0	0	X	X	0	Qn-1
↑	1	0	X	X	1	Qn-1
↓	X	X	X	X	Q1	Qn

Positive Logic 0 ≈ V_{SS}.
Positive Logic 1 ≈ V_{DD}.
↓ = Clock transition from high to low.
↑ = Clock transition from low to high.
X = Don't care.

Device types 03 and 53

Inputs			Output	
CL (level change)	D	R	Q1	Qn
↑	0	0	0	Qn-1
↑	1	0	1	Qn-1
↓	X	0	Q1	Qn
X	X	1	0	0

Positive Logic 0 ≈ V_{SS}.
Positive Logic 1 ≈ V_{DD}.
↓ = Clock transition from high to low.
↑ = Clock transition from low to high.
X = Don't care.

FIGURE 3. Truth tables.

Device types 04 and 54

Inputs					Output	
CL (level change)	Serial input	Parallel/serial control	PI-1	PI-n	Q1 (internal)	Qn
X	X	1	0	0	0	0
X	X	1	0	1	0	1
X	X	1	1	0	1	0
X	X	1	1	1	1	1
↑	0	0	X	X	0	Qn-1
↑	1	0	X	X	1	Qn-1
↓	X	0	X	X	Q1	Qn

Positive logic 0 ≈ V_{SS}.
Positive logic 1 ≈ V_{DD}.
↓ = Clock transition from high to low.
↑ = Clock transition from low to high.
X = Don't care.

Device types 05 and 55

INPUT CONTROL CIRCUIT TRUTH TABLE

DATA	RECIRC.	MODE	BIT INTO STAGE 1
1	X	0	1
0	X	0	0
X	1	1	1
X	0	1	0

TYPICAL STAGE TRUTH TABLE

D	CL (level change)	D+1
0	↑	0
1	↑	1
X	↓	NC

Device types 06 and 56

"A" Enable	P/S	A/B	A/S	Operation *
L	L	L	X	Serial mode; synch. serial data input, "A" parallel data outputs disabled
L	L	H	X	Serial mode; synch. serial data input, "B" parallel data output
L	H	L	L	Parallel mode; "B" synch. parallel data inputs, "A" parallel data outputs disabled
L	H	L	H	Parallel mode; "B" asynch. parallel data inputs, "A" parallel data outputs disabled
L	H	H	L	Parallel mode; "A" parallel data inputs disabled, "B" parallel data outputs, synch. data recirculation
L	H	H	H	Parallel mode; "A" parallel data inputs disabled, "B" parallel data outputs, asynch. data recirculation
H	L	L	X	Serial mode; synch. serial data input, "A" parallel data output
H	L	H	X	Serial mode; synch. serial data input, "B" parallel data output
H	H	L	L	Parallel mode; "B" synch. parallel data input, "A" parallel data output
H	H	L	H	Parallel mode; "B" asynch. parallel data input, "A" parallel data output
H	H	H	L	Parallel mode; "A" synch. parallel data input, "B" parallel data output
H	H	H	H	Parallel mode; "A" asynch. parallel data input, "B" parallel data output

* Outputs change at positive transition of clock in the serial mode and when the A/S/ control input is "low" in the parallel mode.

Positive logic 0 ≈ V_{SS}.
Positive logic 1 ≈ V_{DD}.
NC = No change.
↓ = Clock transition from high to low.
↑ = Clock transition from low to high.
X = Don't care.

FIGURE 3. Truth tables – Continued.

Device types 01 and 51

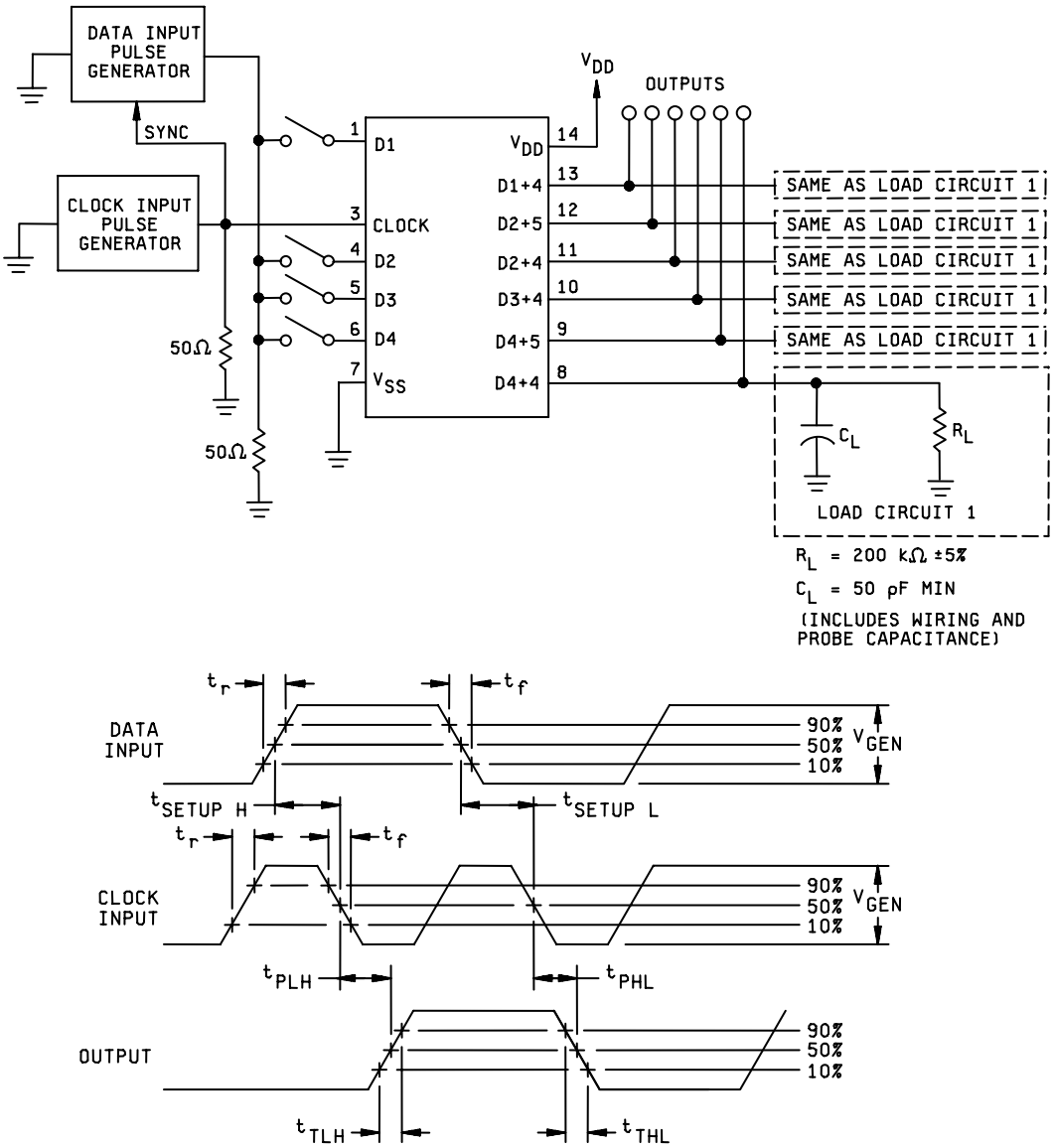

NOTES:

1. The pulse generators have the following characteristics: $V_{GEN} = V_{DD} \pm 1$ percent, t_f and $t_r \leq 20$ ns, duty cycle = 50 percent, $Z_{OUT} = 50\Omega$.
2. $t_{SETUP}H = t_{SETUP}L = 80$ ns at $T_A = 25°C$ and -55°C; $t_{SETUP}H = t_{SETUP}L = 115$ ns at $T_A = 125°C$.
3. Requirements for MAX clock frequency (f_{CL}) are established by setting the parameter to the limits given in table III and observing proper output state changes.
4. Initially, apply clock input pulses with data inputs low and set all outputs low.

FIGURE 4. Switching time test circuit and waveforms.

Device types 02 and 52

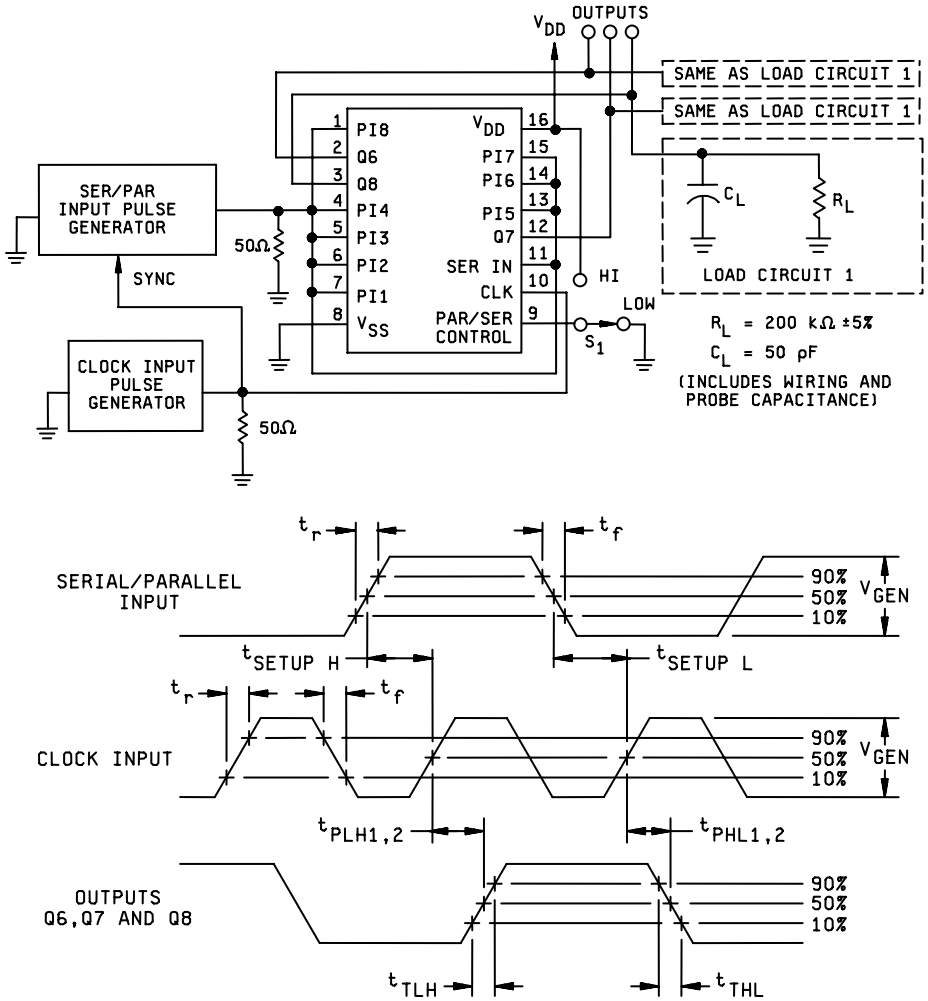

NOTES:

1. The pulse generators have the following characteristics: $V_{GEN} = V_{DD} \pm 1$ percent, t_f and $t_r \leq 20$ ns, duty cycle = 50 percent, $Z_{OUT} = 50\Omega$.
2. When measuring t_{PHL1} and t_{PLH1}, set parallel serial control switch S1 to “LOW”. Initially, apply clock pulse with serial/parallel inputs at 0 V to set outputs low.
3. When measuring t_{PHL2}, t_{PLH2}, t_{THL}, and t_{TLH}, set parallel serial control switch S1 to “HI”. Initially, apply clock pulses with serial/parallel inputs at 0 V to set outputs low.
4. $t_{SETUP}H = t_{SETUP}L = 350$ ns at $T_A = 25°C$ and -55°C; $t_{SETUP}H = t_{SETUP}L = 500$ ns at $T_A = 125°C$. For device type 02, $t_{SETUP}H = t_{SETUP}L = 130$ ns at $T_A = 25°C$ and -55°C; $t_{SETUP}H = t_{SETUP}L = 180$ ns at $T_A = 125°C$.
5. Requirements for MAX clock frequency (f_{CL}) are established by setting the parameter to the limits given in table III and observing proper output state changes.

FIGURE 4. Switching time test circuit and waveforms – Continued.

Device types 03 and 53

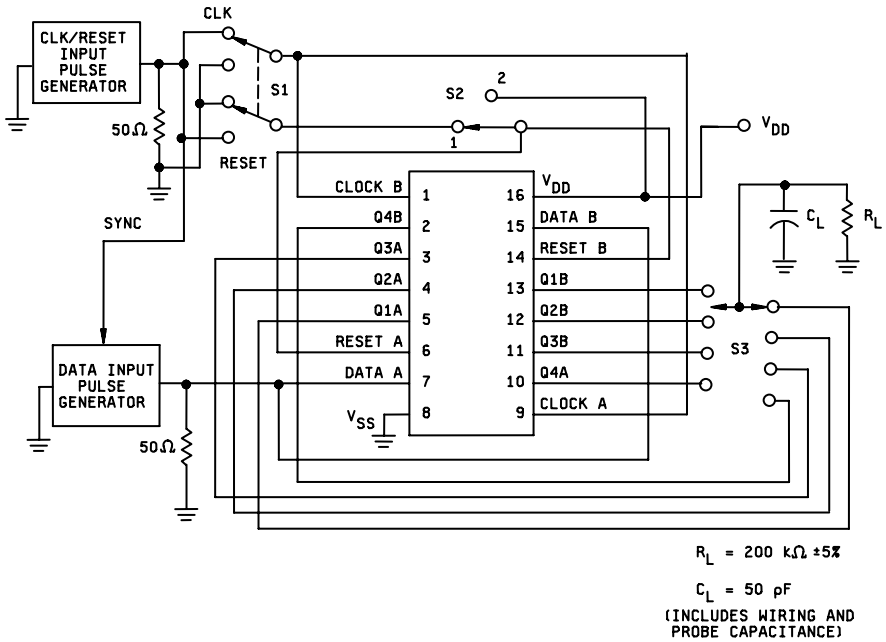

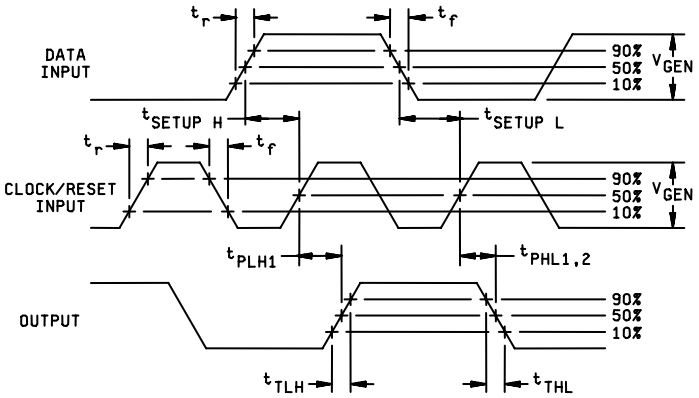

NOTES:

1. The pulse generators have the following characteristics: $V_{GEN} = V_{DD} \pm 1$ percent, t_f and $t_r \leq 20$ ns, duty cycle = 50 percent, $Z_{OUT} = 50\ \Omega$.
2. When measuring t_{PHL1}, t_{PLH1}, t_{THL}, and t_{TLH}, set switch S1 to clock position. Momentarily set switch S2 to position 2 to set outputs low and return to position 1.
3. When measuring t_{PHL2} set switch S2 to reset position. Momentarily set switch S2 to position 2 to set outputs low and return to position 1.
4. $t_{SETUP}H = t_{SETUP}L = 350$ ns at $T_A = 25°C$ and -55°C; $t_{SETUP}H = t_{SETUP}L = 500$ ns at $T_A = 125°C$. For device types 03 and 53, $t_{SETUP}H = t_{SETUP}L = 108$ ns at $T_A = 25°C$ and -55°C; 150 ns at $T_A = 125°C$.
5. For f_{CL}, set switch S1 to clock. Requirements for MAX clock frequency (f_{CL}) are established by setting the parameter to the limits given in table III and observing proper output state changes.

FIGURE 4. Switching time test circuit and waveforms – Continued.

Device types 04 and 54

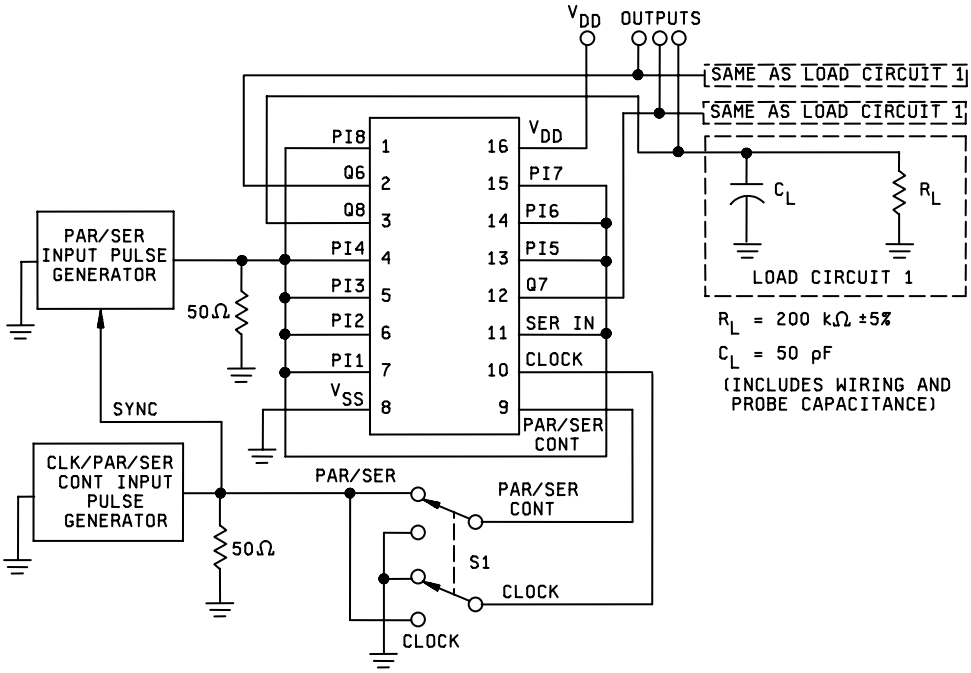

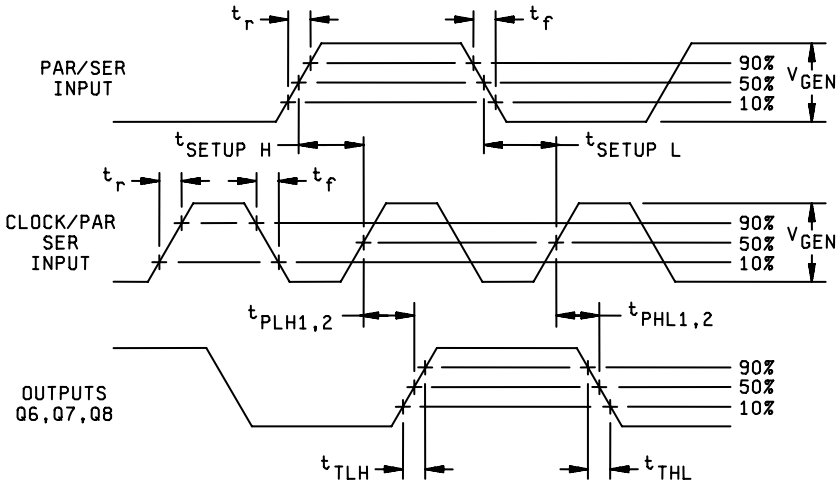

NOTES:

1. The pulse generators have the following characteristics: $V_{GEN} = V_{DD} \pm 1$ percent, t_f and $t_r \leq 20$ ns, duty cycle = 50 percent, $Z_{OUT} = 50\Omega$.
2. When measuring t_{PHL1} and t_{PLH1}, set switch S1 to parallel/serial position.
3. When measuring t_{PHL2}, t_{PLH2}, t_{THL}, and t_{TLH}, set switch S1 to clock position.
4. $t_{SETUP}H = t_{SETUP}L = 350$ ns at $T_A = 25°C$ and -55°C; $t_{SETUP}H = t_{SETUP}L = 500$ ns at $T_A = 125°C$. For device types 04 and 54, $t_{SETUP}H = t_{SETUP}L = 130$ ns at $T_A = 25°C$ and -55°C; 180 ns at $T_A = 125°C$.
5. For f_{CL}, set switch S1 to clock. Requirements for MAX clock frequency (f_{CL}) are established by setting the parameter to the limits given in table III and observing proper output state changes.

FIGURE 4. Switching time test circuit and waveforms – Continued.

Device type 05 and 55

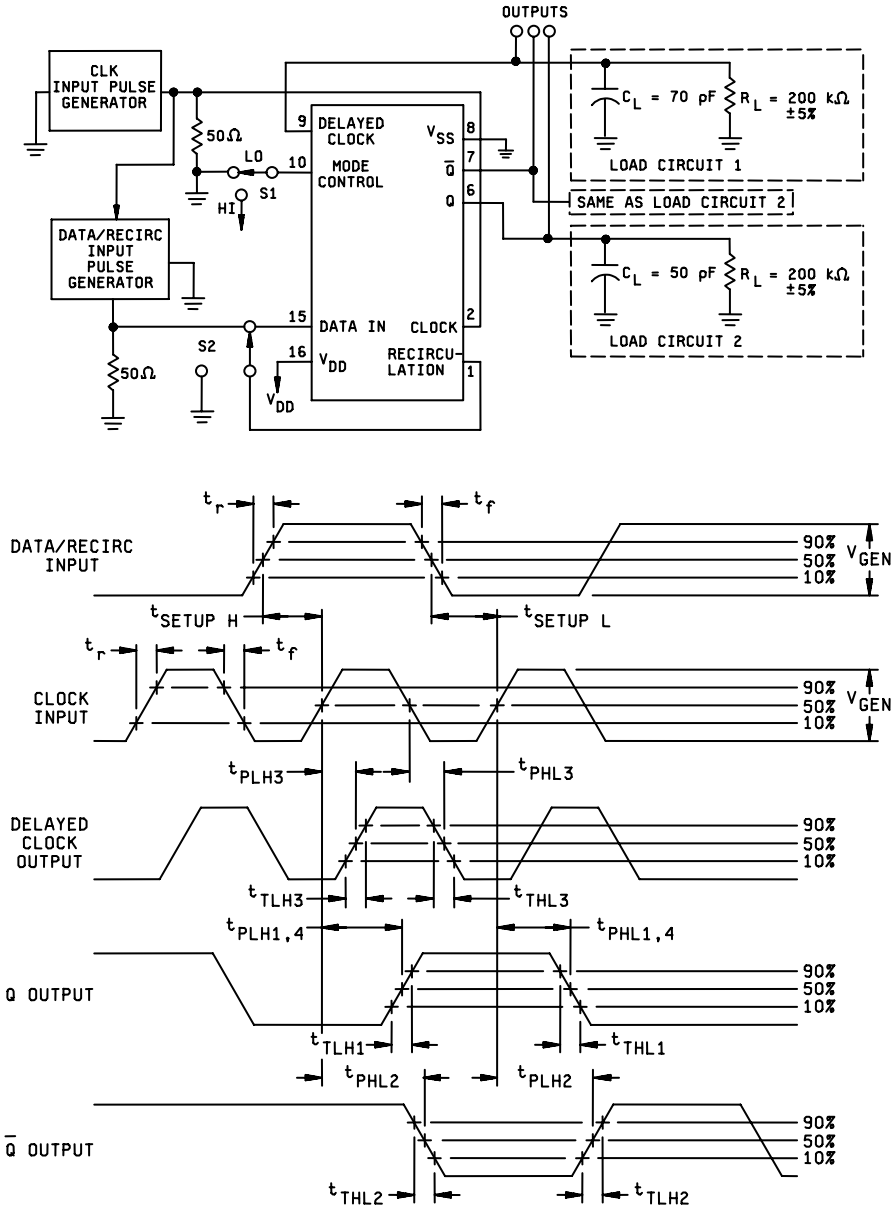

NOTES:

1. The pulse generators have the following characteristics: $V_{GEN} = V_{DD} \pm 1$ percent, t_f and $t_r \leq 20$ ns, duty cycle = 50 percent, $Z_{OUT} = 50\Omega$.
2. When measuring t_{PHL1}, t_{PHL2}, t_{PHL3}, t_{PLH1}, t_{PLH2}, t_{PLH3}, t_{THL1}, t_{THL2}, t_{THL3}, t_{TLH1}, t_{TLH2}, and t_{TLH3}, set switch S1 to low position.
3. When measuring t_{PHL4} and t_{PLH4}, set switch S2 to high position.
4. $t_{SETUP}H = t_{SETUP}L = 400$ ns at $T_A = 25°C$ and -55°C; $t_{SETUP}H = t_{SETUP}L = 680$ ns at $T_A = 125°C$. For device types 05 and 55, $t_{SETUP}H = t_{SETUP}L = 215$ ns at $T_A = 25°C$ and -55°C; 300 ns at $T_A = 125°C$.
5. For f_{CL}, set switch S1 to low position. Requirements for MAX clock frequency (f_{CL}) are established by setting the parameter to the limits given in table III and observing proper output state changes.

FIGURE 4. Switching time test circuit and waveforms – Continued.

Device types 06 and 56

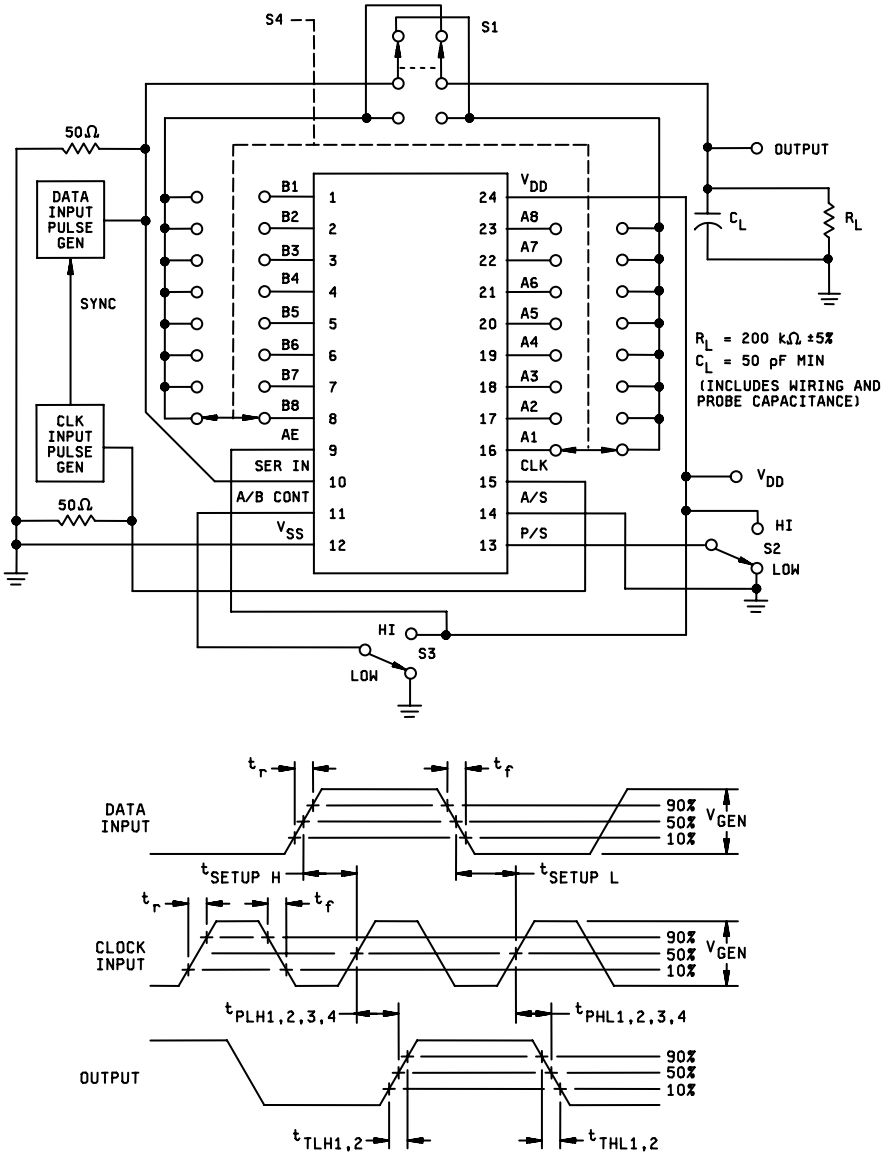

NOTES:

1. The pulse generators have the following characteristics: $V_{GEN} = V_{DD} \pm 1$ percent, t_f and $t_r \leq 20$ ns, duty cycle = 50 percent, $Z_{OUT} = 50\Omega$.
2. When measuring t_{PHL1}, t_{PLH1}, t_{THL1}, and t_{TLH1}, set switch S2 and S3 to high position.
3. When measuring t_{PHL2}, t_{PLH2}, t_{THL2}, and t_{TLH2}, set switch S2 to high position and S3 to low position.
4. When measuring t_{PHL3} and t_{PLH3}, set switch S2 to low position and S3 to high position.
5. When measuring t_{PHL4} and t_{PLH4}, set switch S2 to low position and S3 to low position.
6. $t_{SETUP}H = t_{SETUP}L = 500$ ns at $T_A = 25°C$ and -55°C; $t_{SETUP}H = t_{SETUP}L = 650$ ns at $T_A = 125°C$. For device types 06 and 56, $t_{SETUP}H = t_{SETUP}L = 172$ ns at $T_A = 25°C$ and -55°C; 240 ns at $T_A = 125°C$.
7. For f_{CL}, set switch S2 to low position and S3 to low position and then high position. Requirements for MAX clock frequency (f_{CL}) are established by setting the parameter to the limits given in table III and observing proper output state changes.

FIGURE 4. Switching time test circuit and waveforms – Continued.

4. VERIFICATION

4.1 Sampling and inspection. Sampling and inspection procedures shall be in accordance with MIL-PRF-38535 or as modified in the device manufacturer's Quality Management (QM) plan. The modification in the QM plan shall not affect the form, fit, or function as described herein.

4.2 Screening. Screening shall be in accordance with MIL-PRF-38535 and shall be conducted on all devices prior to qualification and conformance inspection. The following additional criteria shall apply:

a. The burn-in test duration, test condition, and test temperature, or approved alternatives shall be as specified in the device manufacturer's QM plan in accordance with MIL-PRF-38535. The burn-in test circuit shall be maintained under document control by the device manufacturer's Technology Review Board (TRB) in accordance with MIL-PRF-38535 and shall be made available to the acquiring or preparing activity upon request. The test circuit shall specify the inputs, outputs, biases, and power dissipation, as applicable, in accordance with the intent specified in test method 1015 of MIL-STD-883.

b. Delete the sequence specified as interim (pre-burn-in) electrical parameters through interim (post-burn-in) electrical parameters of table IA of MIL-PRF-38535 and substitute lines 1 through 7 of table II herein.

c. Burn-in (method 1015 of MIL-STD-883).

(1) Unless otherwise specified in the manufacturers QM plan for static tests (test condition A), ambient temperature (T_A) shall be +125°C minimum. Test duration for each static test shall be 24 hours minimum for class S devices and in accordance with table I of method 1015 for class B devices.

i. For static burn-in I, all inputs shall be connected to 0.0 V.

ii. For static burn-in II, all inputs shall be connected to V_{DD}.

iii. Except for V_{DD} and V_{SS}, the terminal shall be connected through resistors whose value is 2 kΩ to 47 kΩ. The actual measured value of the resistor selected shall not exceed ±20% of its branded value due to use, heat or age.

iv. Output may be open or connected to $V_{DD}/2$.

v. V_{DD} = 12.5 V minimum, 15 V maximum for device types 01 through 06.
V_{DD} = 15 V minimum, 18 V maximum for device types 51 through 56.
$V_{DD}/2 = V_{DD}/2 \pm 1.0$ V for all devices.
V_{SS} = 0.0 V.

(2) Unless otherwise specified in the manufacturers QM plan for dynamic test (test condition D), ambient temperature shall be +125°C minimum. Test duration shall be in accordance with table I of method 1015.

i. Except for V_{DD} and V_{SS}, the terminals shall be connected through resistors whose value is 2 kΩ to 47 kΩ. The actual measured value of the resistor selected shall not exceed ±20% of its branded value due to use, heat or age.

ii. Input signal requirements: Square wave, 50% duty cycle; 25 kHz < PRR < 1 MHz; t_{TLH} and t_{THL} < 1 μs. Voltage level: Minimum = V_{SS} – 0.5 V, +10% V_{DD};
Maximum = V_{DD} + 0.5 V, -10% V_{DD}.

iii. V_{DD} = 12.5 V minimum, 15 V maximum for device types 01 through 06.
V_{DD} = 15 V minimum, 18 V maximum for device types 51 through 56.
$V_{DD}/2 = V_{DD}/2 \pm 1.0$ V.
V_{SS} = 0.0 V.

d. Interim and final electrical test parameters shall be as specified in table II.

e. For class S devices, post dynamic burn-in, or class B devices, post static burn-in, electrical parameter measurements may, at the manufacturer's option, be performed separately or included in the final electrical parameter requirements.

f. When device types 01 through 06 are qualified by extension (see 4.3.1), they shall be screened in accordance with the requirements for corresponding device types 51 through 56.

TABLE II. Electrical test requirements.

Line no.	MIL-PRF-38535 test requirements	Class S device 1/			Class B device 1/		
		Ref. par.	Table III Subgroups 2/	Table IV delta limits 3/	Ref. par.	Table III subgroups 2/	Table IV delta limits 3/
1	Interim electrical parameters		1			1	
2	Static burn-in I (method 1015)	4.2c 4.5.2					
3	Same as line 1		1	Δ			
4	Static burn-in II (method 1015)	4.2c 4.5.2			4.2c 4.5.2	4/	
5	Same as line 1	4.2e	1*	Δ	4.2e	1*	Δ
6	Dynamic burn-in (method 1015)	4.2c 4.5.2					
7	Same as line 1	4.2e	1*	Δ			
8	Final electrical parameters (method 5004)		1*, 2, 3, 7, 9			1*, 2, 3, 7, 9	
9	Group A test requirements (method 5005)	4.4.1	1, 2, 3, 4, 7, 8, 9, 10, 11		4.4.1	1, 2, 3, 4, 7, 8, 9, 10, 11	
10	Group B test when using method 5005 QCI option	4.4.2	1, 2, 3, 7, 8, 9, 10, 11	Δ			
11	Group C end-point electrical parameters (method 5005)				4.4.3	1, 2, 3	Δ
12	Group D end-point electrical parameters (method 5005)	4.4.4	1, 2, 3		4.4.4	1, 2, 3	

1/ Blank spaces indicate tests are not applicable.

2/ * indicates PDA applies to subgroup 1 (see 4.2.1).

3/ Δ indicates delta limits shall be required only on table III subgroup 1, where specified, and the delta values shall be computed with reference to the previous interim electrical parameters.

4/ The device manufacturer may at his option either perform delta measurements or within 24 hours after burn-in (or removal of bias) perform the final electrical parameter measurements.

4.2.1 Percent defective allowable (PDA).

a. The PDA for class S devices shall be 5 percent for static burn-in and 5 percent for dynamic burn-in, based on the exact number of devices submitted to each separate burn-in.

b. Static burn-in I and II failure shall be cumulative for determining the PDA.

c. The PDA for class B devices shall be in accordance with MIL-PRF-38535 for static burn-in. Dynamic burn-in is not required.

d. Those devices whose measured characteristics, after burn-in, exceed the specified delta (Δ) limits or electrical parameter limits specified in table III, subgroup 1, are defective and shall be removed from the lot. The verified failures divided by the total number of devices in the lot initially submitted to burn-in shall be used to determine the percent defective for the lot and the lot shall be accepted or rejected based on the specified PDA.

4.3 Qualification inspection. Qualification inspection shall be in accordance with MIL-PRF-38535.

4.3.1 Qualification extension. When authorized by the qualifying activity, for qualifying inspection, if a manufacturer qualifies to a 51-56 device type, which is manufactured identically to a 01-06 device type on this specification, then the 01- 06 device type may be part I qualified by conducting only worst case group A electrical tests and any electrical tests specified as additional group C subgroups and submitting data in accordance with MIL-PRF-38535.

4.4 Technology Conformance inspection (TCI). Technology conformance inspection shall be in accordance with MIL-PRF-38535 and herein for groups A, B, C, D, and E inspections (see 4.4.1 through 4.4.5).

4.4.1 Group A inspection. Group A inspection shall be in accordance with table III of MIL-PRF-38535 and as follows:

a. Tests shall be performed in accordance with table II herein.

b. Subgroups 5 and 6 shall be omitted.

c. Subgroup 4 (C_I measurement) shall be measured only for initial qualification and after process or design changes that may affect input capacitance. Capacitance shall be measured between the designated terminal and V_{SS} at a frequency of 1 MHz.

d. Subgroups 9 and 11 shall be measured only for initial qualification and after process or design changes which may affect dynamic performance.

e. At the manufacturers option, test tapes may be programmed simultaneously for each identical section provided that each output is measured and each specified input combination is tested.

f. When device types 01 through 06 are qualified by extension (see 4.3.1), these device types will be inspected (QCI) according to the requirements for device types 51 through 56, respectively.

4.4.2 Group B inspection. Group B inspection shall be in accordance with table II of MIL-PRF-38535.

4.4.3 Group C inspection. Group C inspection shall be in accordance with table IV of MIL-PRF-38535 and as follows:

a. End-point electrical parameters shall be as specified in table II herein. Delta limits shall apply only to subgroup 1 of group C inspection and shall consist of tests specified in table IV herein.

b. The steady-state life test duration, test condition, and test temperature, or approved alternatives shall be as specified in the device manufacturer's QM plan in accordance with MIL-PRF-38535. The burn-in test circuit shall be maintained under document control by the device manufacturer's Technology Review Board (TRB) in accordance with MIL-PRF-38535 and shall be made available to the acquiring or preparing activity upon request. The test circuit shall specify the inputs, outputs, biases, and power dissipation, as applicable, in accordance with the intent specified in test method 1005 of MIL-STD-883.

c. When device types 01 through 06 are qualified by extension (see 4.3.1), these device types will be inspected (QCI) according to the requirements for device types 51 through 56, respectively.

TABLE III. Group A inspection for device type 01.

Symbol	MIL-STD-883 method	Cases A, C,D,T,X,Y Symbol	Terminal conditions and limits 1/ D1	NC	Clock	D2	D3	D4	V_{SS}	D4+4	D4+5	D3+4	D2+4	D2+5	D1+4	V_{DD}	Measured Terminal	Test limits Subgroup 1 T_C = 25°C Min	Subgroup 1 Max	Subgroup 2 T_C = 125°C Min	Subgroup 2 Max	Subgroup 3 T_C = -55°C Min	Subgroup 3 Max	Unit
		Test no.	1	2	3	4	5	6	7	8	9	10	11	12	13	14								
V_{IC} (pos)		1	1mA													GND	D1		1.5					V
		2			1mA											"	Clock		"					"
		3				1mA										"	D2		"					"
		4					1mA									"	D3		"					"
		5						1mA								"	D4		"					"
V_{IC} (neg)		6	-1mA						GND								D1		-6					"
		7			-1mA				"								Clock		"					"
		8				-1mA			"								D2		"					"
		9					-1mA		"								D3		"					"
		10						-1mA	"								D4		"					"
I_{SS} 2/	3005	11	GND		3/	GND	GND	GND	"							15.0V	None		-0.3		-3.0			µA
		12	15.0V		"	15.0V	15.0V	15.0V	"							"	"		"		"			"
		13	GND		"	GND	GND	GND	"							"	"		"		"			"
		14	15.0V		"	15.0V	15.0V	15.0V	"							"	"		"		"			"
		15	GND		"	GND	GND	GND	"							"	"		"		"			"
		16	15.0V		GND	15.0V	15.0V	15.0V	"							"	V_{SS}		"		"			"
		17	15.0V		15.0V	15.0V	15.0V	15.0V	"							"	V_{SS}		"		"			"
		18	15.0V		GND	15.0V	15.0V	15.0V	"							"	None		"		"			"
		19	GND		GND	GND	GND	GND	"							"	V_{SS}		"		"			"
V_{OH1}	3006	20	V_{IH1}		5/	V_{IH1}	V_{IH1}	V_{IH1}	"	I_{OH} 6/						5.0V	D4+4	4.5		4.5		4.5		V
		21	4/		"	4/	4/	4/	"		I_{OH} 6/					"	D4+5	"		"		"		"
		22	"		"	"	"	"	"			I_{OH} 6/				"	D3+4	"		"		"		"
		23	"		"	"	"	"	"				I_{OH} 6/			"	D2+4	"		"		"		"
		24	"		"	"	"	"	"					I_{OH} 6/		"	D2+5	"		"		"		"
		25	"		"	"	"	"	"						I_{OH} 6/	"	D1+4	"		"		"		"
V_{OH2}		26	V_{IH2}		"	V_{IH2}	V_{IH2}	V_{IH2}	"							12.5V	D4+4	11.25		11.25		11.25		"
		27	7/		"	7/	7/	7/	"							"	D4+5	"		"		"		"
		28	"		"	"	"	"	"							"	D3+4	"		"		"		"
		29	"		"	"	"	"	"							"	D2+4	"		"		"		"
		30	"		"	"	"	"	"							"	D2+5	"		"		"		"
		31	"		"	"	"	"	"							"	D1+4	"		"		"		"
V_{OL1}	3007	32	V_{IL1}		"	V_{IL1}	V_{IL1}	V_{IL1}	"	I_{OL} 9/						5.0V	D4+4		0.5		0.5		0.5	"
		33	8/		"	8/	8/	8/	"		I_{OL} 9/					"	D4+5		"		"		"	"
		34	"		"	"	"	"	"			I_{OL} 9/				"	D3+4		"		"		"	"
		35	"		"	"	"	"	"				I_{OL} 9/			"	D2+4		"		"		"	"
		36	"		"	"	"	"	"					I_{OL} 9/		"	D2+5		"		"		"	"
		37	"		"	"	"	"	"						I_{OL} 9/	"	D1+4		"		"		"	"
V_{OL2}		38	V_{IL2}		"	V_{IL2}	V_{IL2}	V_{IL2}	"							12.5V	D4+4		1.25		1.25		1.25	"
		39	10/		"	10/	10/	10/	"							"	D4+5		"		"		"	"
		40	"		"	"	"	"	"							"	D3+4		"		"		"	"
		41	"		"	"	"	"	"							"	D2+4		"		"		"	"
		42	"		"	"	"	"	"							"	D2+5		"		"		"	"
		43	"		"	"	"	"	"							"	D1+4		"		"		"	"

See footnotes at end of device type 01.

TABLE III. Group A inspection for device type 01 - Continued.

Symbol	MIL-STD-883 method	Cases A, C,D,T,X,Y	Terminal conditions and limits 1/														Measured Terminal	Test limits						Unit
		Symbol	D1	NC	Clock	D2	D3	D4	V_{SS}	D4+4	D4+5	D3+4	D2+4	D2+5	D1+4	V_{DD}		Subgroup 1 T_C = 25°C		Subgroup 2 T_C = 125°C		Subgroup 3 T_C = -55°C		
		Test no.	1	2	3	4	5	6	7	8	9	10	11	12	13	14		Min	Max	Min	Max	Min	Max	
I_{IH1} 11/	3010	44	15.0V		15.0V	15.0V	15.0V	15.0V	GND							15.0V	All inputs together		5.0					nA
I_{IH2}		45	15.0V		GND	GND	GND	GND	"							"	D1		1.0		45			"
		46	GND		15.0V	GND	GND	"	"							"	Clock		"		"			"
		47	"		GND	15.0V	GND	"	"							"	D2		"		"			"
		48	"		GND	GND	15.0V	"	"							"	D3		"		"			"
		49	"		GND	GND	GND	15.0V	"							"	D4		"		"			"
I_{IL1} 11/	3009	50	GND		GND	GND	GND	GND	GND							15.0V	All inputs together		-5.0					nA
I_{IL2}		51	"		"	"	"	"	"							"	D1		-1.0		-45			"
		52	"		"	"	"	"	"							"	Clock		"		"			"
		53	"		"	"	"	"	"							"	D2		"		"			"
		54	"		"	"	"	"	"							"	D3		"		"			"
		55	"		"	"	"	"	"							"	D4		"		"			"
																		Subgroup 4 T_C = 25°C						
																		Min	Max					
C_I	3012	56	12/						GND							GND	D1		12					pF
		57			12/				"							"	Clock		70					"
		58				12/			"							"	D2		12					"
		59					12/		"							"	D3		12					"
		60						12/	"							"	D4		12					"
																		Subgroup 7 T_C = 25°C		Subgroup 8 T_C = 125°C		Subgroup 8 T_C = -55°C		
																		Min	Max	Min	Max	Min	Max	
Truth table test	3014 13/	61	GND		14/	GND	GND	GND	GND							5.0V	None	See 15/, 16/						
		62	5.0V		"	5.0V	5.0V	5.0V	"							"	None							
		63	GND		"	GND	GND	GND	"							"	None							
		64	"		"	"	"	"	"	L		L	L		L	"	All outputs							
		65	"		GND	"	"	"	"	"		"	"		"	"								
		66	"		GND	"	"	"	"	"		"	"		"	"	"							
		67	"		GND	"	"	"	"	"		"	"		"	"	"							
		68	5.0V		5.0V	5.0V	5.0V	5.0V	"	"		"	"		"	"	"							
		69	"		"	"	"	"	"	"		"	"		"	"	"							
		70	"		"	"	"	"	"	"		"	"		"	"	"							
		71	"		"	"	"	"	"	"		"	"		"	"	"							
		72	"		GND	"	"	"	"	H	L	H	H	L	H	"	"							
		73	"		5.0V	"	"	"	"	H	L	H	H	L	H	"	"							
		74	"		GND	"	"	"	"	L	H	L	L	H	L	"	"							
		75	"		5.0V	"	"	"	"	L	H	L	L	H	L	"	"							
		76	"		GND	"	"	"	"	L	L	L	L	L	L	"	"							

See footnotes at end of device type 01.

TABLE III. Group A inspection for device type 01 – Continued.

Symbol	MIL-STD-883 method	Cases A, C,D,T,X,Y	Terminal conditions and limits 1/														Measured Terminal	Test limits						Unit
		Symbol	D1	NC	Clock	D2	D3	D4	V_{SS}	D4+4	D4+5	D3+4	D2+4	D2+5	D1+4	V_{DD}		Subgroup 9 T_C = 25°C		Subgroup 10 T_C = 125°C		Subgroup 11 T_C = -55°C		
		Test no.	1	2	3	4	5	6	7	8	9	10	11	12	13	14		Min	Max	Min	Max	Min	Max	
t_{PHL}	3003 Fig. 4	77			IN			IN	GND	OUT						5.0V	Clock to D4+4	20	800	30	1200	20	800	ns
		78			"			IN	"		OUT					"	Clock to D4+5	"	"	"	"	"	"	"
		79			"		IN		"			OUT				"	Clock to D3+4	"	"	"	"	"	"	"
		80			"	IN			"				OUT			"	Clock to D2+4	"	"	"	"	"	"	"
		81			"	IN			"					OUT		"	Clock to D2+5	"	"	"	"	"	"	"
		82	IN		"				"						OUT	"	Clock to D1+4	"	"	"	"	"	"	"
t_{PLH}	3003 Fig. 4	83			IN			IN	GND	OUT						5.0V	Clock to D4+4	20	650	30	975	20	650	ns
		84			"			IN	"		OUT					"	Clock to D4+5	"	"	"	"	"	"	"
		85			"		IN		"			OUT				"	Clock to D3+4	"	"	"	"	"	"	"
		86			"	IN			"				OUT			"	Clock to D2+4	"	"	"	"	"	"	"
		87			"	IN			"					OUT		"	Clock to D2+5	"	"	"	"	"	"	"
		88	IN		"				"						OUT	"	Clock to D1+4	"	"	"	"	"	"	"
t_{THL}	3004 Fig. 4	89			"			IN	"	OUT						"	D4+4	13	760	18	1140	13	760	"
		90			"			IN	"		OUT					"	D4+5	"	"	"	"	"	"	"
		91			"		IN		"			OUT				"	D3+4	"	"	"	"	"	"	"
		92			"	IN			"				OUT			"	D2+4	"	"	"	"	"	"	"
		93			"	IN			"					OUT		"	D2+5	"	"	"	"	"	"	"
		94	IN		"				"						OUT	"	D1+4	"	"	"	"	"	"	"
t_{TLH}		95			"			IN	"	OUT						"	D4+4	"	"	"	"	"	"	"
		96			"			IN	"		OUT					"	D4+5	"	"	"	"	"	"	"
		97			"		IN		"			OUT				"	D3+4	"	"	"	"	"	"	"
		98			"	IN			"				OUT			"	D2+4	"	"	"	"	"	"	"
		99			"	IN			"					OUT		"	D2+5	"	"	"	"	"	"	"
		100	IN		"				"						OUT	"	D1+4	"	"	"	"	"	"	"
f_{CL} (max) 17/		101			"			IN	"	OUT						"	Clock		1.0		1.4		1.0	µs
		102			"			IN	"		OUT					"	"		"		"		"	"
		103			"		IN		"			OUT				"	"		"		"		"	"
		104			"	IN			"				OUT			"	"		"		"		"	"
		105			"	IN			"					OUT		"	"		"		"		"	"
		106	IN		"				"						OUT	"	"		"		"		"	"

See footnotes on next page.

TABLE III. Group A inspection for device type 01 – Continued.

1/ Terminals not designated may be "HIGH" level logic, "LOW" level logic, or open except as follows:
$V_{IC(POS)}$ tests; the V_{SS} terminal shall be open.
$V_{IC(NEG)}$ tests; the V_{DD} terminal shall be open.
I_{SS} tests; the output terminals shall be open.

2/ Test numbers 11 through 19 shall be run in sequence. See 4.5.3.

3/ Apply single clock pulse; V_{IN} = 0 V to V_{DD}.

4/ V_{IH1} = 3.8 V at 25°C, 3.6 V at 125°C, 3.95 V at -55°C.

5/ Apply clock pulse; V_{IN} = 0 V to V_{DD} until proper output state is achieved.

6/ I_{OH} = -100 μA at 25°C, -70 μA at 125°C, -125 μA at -55°C.

7/ V_{IH2} = 9.5 V at 25°C, 9.25 V at 125°C, 9.75 V at -55°C.

8/ V_{IL1} = 1.1 V at 25°C, 0.85 V at 125°C, 1.35 V at -55°C.

9/ I_{OL} = 125 μA at 25°C, 85 μA at 125°C, 155 μA at -55°C.

10/ V_{IL2} = 2.8 V at 25°C, 2.55 V at 125°C, 3.05 V at -55°C.

11/ The device manufacturer may, at his option, measure I_{IL} and I_{IH} at 25°C for each individual input or measure all inputs together.

12/ See 4.4.1c.

13/ Test numbers 61 through 76 shall be run in sequence.

14/ Apply single clock pulse; V_{IN} = 0 V to V_{DD}.

15/ The output voltage limits for each temperature are "H" = V_{DD} –0.5 V min. and "L" = V_{SS} +0.5 V max.

16/ The functional tests shall be performed at V_{IH} and $V_{DD} \leq 5.0$ V and ≥ 15 V.

17/ The maximum clock frequency (f_{CL}) requirement is considered met if proper output state changes occur with the pulse repetition period set to that given in the limits column.

TABLE III. Group A inspection for device type 02.

Symbol	MIL-STD-883 method	Cases E,F,N,Z	Terminal conditions and limits 1/																Measured terminal	Test limits						Unit
			PI8	Q6	Q8	PI4	PI3	PI2	PI1	V_{SS}	P/S Control	Clock	Serial In	Q7	PI5	PI6	PI7	V_{DD}		Subgroup 1 T_C = 25°C		Subgroup 2 T_C = 125°C		Subgroup 3 T_C = -55°C		
		Test no.	1	2	3	4	5	6	7	8	9	10	11	12	13	14	15	16		Min	Max	Min	Max	Min	Max	
V_{IC} (POS)		1	1mA															GND	PI8		1.5					V
		2				1mA												"	PI4		"					"
		3					1mA											"	PI3		"					"
		4						1mA										"	PI2		"					"
		5							1mA									"	PI1		"					"
		6									1mA							"	P/S control		"					"
		7										1mA						"	Clock		"					"
		8											1mA					"	Serial In		"					"
		9													1mA			"	PI5		"					"
		10														1mA		"	PI6		"					"
		11															1mA	"	PI7		"					"
V_{IC} (NEG)		12	-1mA							GND									PI8		-6					"
		13				-1mA				"									PI4		"					"
		14					-1mA			"									PI3		"					"
		15						-1mA		"									PI2		"					"
		16							-1mA	"									PI1		"					"
		17								"	-1mA								P/S control		"					"
		18								"		-1mA							Clock		"					"
		19								"			-1mA						Serial In		"					"
		20								"					-1mA				PI5		"					"
		21								"						-1mA			PI6		"					"
		22								"							-1mA		PI7		"					"
I_{SS} 2/	3005	23	GND			GND	15.0V	GND	15.0V	"	15.0V	15.0V	GND		15.0V	GND	15.0V	15.0V	None		-0.5		-5.0			µA
		24	GND			GND	15.0V	GND	15.0V	"	"	GND	GND		15.0V	GND	15.0V	"	"		"		"			"
		25	GND			GND	15.0V	GND	15.0V	"	"	15.0V	GND		15.0V	GND	15.0V	"	"		"		"			"
		26	15.0V			15.0V	GND	15.0V	GND	"	"	15.0V	15.0V		GND	15.0V	GND	"	"		"		"			"
		27	"			"	"	"	"	"	"	GND	"		"	"	"	"	V_{SS}		"		"			"
		28	"			"	"	"	"	"	"	15.0V	"		"	"	"	"	None		"		"			"
		29	"			"	"	"	"	"	GND	15.0V	"		"	"	"	"	V_{SS}		"		"			"
		30	"			"	"	"	"	"	"	GND	"		"	"	"	"	None		"		"			"
		31	"			"	"	"	"	"	"	15.0V	"		"	"	"	"	None		"		"			"
		32	GND			GND	15.0V	GND	15.0V	"	"	15.0V	GND		15.0V	GND	15.0V	"	V_{SS}		"		"			"
V_{OH1}	3006	33	V_{IH1} 3/	I_{OH} 4/		V_{IH1} 3/	V_{IH1} 3/	V_{IH1} 3/	V_{IH1} 3/	"	V_{IH1} 3/	5/	V_{IH1} 3/		V_{IH1} 3/	V_{IH1} 3/	V_{IH1} 3/	5.0V	Q6	4.5		4.5		4.5		V
		34	V_{IH1} 3/			V_{IH1} 3/	V_{IH1} 3/	V_{IH1} 3/	V_{IH1} 3/	"	V_{IH1} 3/	"	V_{IH1} 3/	I_{OH} 4/	V_{IH1} 3/	V_{IH1} 3/	V_{IH1} 3/	5.0V	Q7	4.5		4.5		4.5		"
		35	V_{IH1} 3/		I_{OH} 4/	V_{IH1} 3/	V_{IH1} 3/	V_{IH1} 3/	V_{IH1} 3/	"	V_{IH1} 3/	"	V_{IH1} 3/		V_{IH1} 3/	V_{IH1} 3/	V_{IH1} 3/	5.0V	Q8	4.5		4.5		4.5		"
V_{OH2}		36	V_{IH2} 6/			V_{IH2} 6/	V_{IH2} 6/	V_{IH2} 6/	V_{IH2} 6/	"	V_{IH2} 6/	"	V_{IH2} 6/		V_{IH2} 6/	V_{IH2} 6/	V_{IH2} 6/	12.5V	Q6	11.25		11.25		11.25		"
		37	V_{IH2} 6/			V_{IH2} 6/	V_{IH2} 6/	V_{IH2} 6/	V_{IH2} 6/	"	V_{IH2} 6/	"	V_{IH2} 6/		V_{IH2} 6/	V_{IH2} 6/	V_{IH2} 6/	12.5V	Q7	11.25		11.25		11.25		"
		38	V_{IH2} 6/			V_{IH2} 6/	V_{IH2} 6/	V_{IH2} 6/	V_{IH2} 6/	"	V_{IH2} 6/	"	V_{IH2} 6/		V_{IH2} 6/	V_{IH2} 6/	V_{IH2} 6/	12.5V	Q8	11.25		11.25		11.25		"
V_{OL1}	3007	39	V_{IL1} 8/	I_{OL} 7/		V_{IL1} 8/	V_{IL1} 8/	V_{IL1} 8/	V_{IL1} 8/	"	V_{IH1} 3/	"	V_{IL1} 8/		V_{IL1} 8/	V_{IL1} 8/	V_{IL1} 8/	5.0V	Q6		0.5		0.5		0.5	"
		40	V_{IL1} 8/			V_{IL1} 8/	V_{IL1} 8/	V_{IL1} 8/	V_{IL1} 8/	"	V_{IH1} 3/	"	V_{IL1} 8/	I_{OL} 7/	V_{IL1} 8/	V_{IL1} 8/	V_{IL1} 8/	5.0V	Q7		0.5		0.5		0.5	"
		41	V_{IL1} 8/		I_{OL} 7/	V_{IL1} 8/	V_{IL1} 8/	V_{IL1} 8/	V_{IL1} 8/	"	V_{IH1} 3/	"	V_{IL1} 8/		V_{IL1} 8/	V_{IL1} 8/	V_{IL1} 8/	5.0V	Q8		0.5		0.5		0.5	"
V_{OL2}		42	V_{IL2} 9/			V_{IL2} 9/	V_{IL2} 9/	V_{IL2} 9/	V_{IL2} 9/	"	V_{IH2} 6/	"	V_{IL2} 9/		V_{IL2} 9/	V_{IL2} 9/	V_{IL2} 9/	12.5V	Q6		1.25		1.25		1.25	"
		43	V_{IL2} 9/			V_{IL2} 9/	V_{IL2} 9/	V_{IL2} 9/	V_{IL2} 9/	"	V_{IH2} 6/	"	V_{IL2} 9/		V_{IL2} 9/	V_{IL2} 9/	V_{IL2} 9/	12.5V	Q7		1.25		1.25		1.25	"
		44	V_{IL2} 9/			V_{IL2} 9/	V_{IL2} 9/	V_{IL2} 9/	V_{IL2} 9/	"	V_{IH2} 6/	"	V_{IL2} 9/		V_{IL2} 9/	V_{IL2} 9/	V_{IL2} 9/	12.5V	Q8		1.25		1.25		1.25	"

See footnotes at end of device type 02.

TABLE III. Group A inspection for device type 02 – Continued.

Symbol	MIL-STD-883 method	Cases E,F,N,Z	Terminal conditions and limits 1/																Measured terminal	Test limits						Unit
			PI8	Q6	Q8	PI4	PI3	PI2	PI1	V_{SS}	P/S Control	Clock	Serial In	Q7	PI5	PI6	PI7	V_{DD}		Subgroup 1 T_C = 25°C		Subgroup 2 T_C = 125°C		Subgroup 3 T_C = -55°C		
		Test no.	1	2	3	4	5	6	7	8	9	10	11	12	13	14	15	16		Min	Max	Min	Max	Min	Max	
I_{IH1} 10/	3010	45	15.0V			15.0V	15.0V	15.0V	15.0V	GND	15.0V	15.0V	15.0V		15.0V	15.0V	15.0V	15.0V	All inputs together		1100					nA
I_{IH2}		46	15.0V			GND	GND	GND	GND	"	GND	GND	GND		GND	GND	GND	"	PI8		100		100			"
		47	"			15.0V	GND	GND	"	"	"	"	"		"	"	"	"	PI4		"		"			"
		48	"			GND	15.0V	GND	"	"	"	"	"		"	"	"	"	PI3		"		"			"
		49	"			"	GND	15.0V	"	"	"	"	"		"	"	"	"	PI2		"		"			"
		50	"			"	"	GND	15.0V	"	"	"	"		"	"	"	"	PI1		"		"			"
		51	"			"	"	"	GND	"	15.0V	"	"		"	"	"	"	P/S control		"		"			"
		52	"			"	"	"	"	"	GND	15.0V	"		"	"	"	"	Clock		"		"			"
		53	"			"	"	"	"	"	"	GND	15.0V		"	"	"	"	Serial In		"		"			"
		54	"			"	"	"	"	"	"	"	GND		15.0V	"	"	"	PI5		"		"			"
		55	"			"	"	"	"	"	"	"	GND		GND	15.0V	"	"	PI6		"		"			"
		56	"			"	"	"	"	"	"	"	GND		GND	GND	15.0V	"	PI7		"		"			"
I_{IL1} 10/	3009	57	GND			GND	GND	GND	GND	GND	GND	GND	GND		GND	GND	GND	15.0V	All inputs together		-1100					nA
I_{IL2}		58	"			"	"	"	"	"	"	"	"		"	"	"	"	PI8		-100		-100			"
		59	"			"	"	"	"	"	"	"	"		"	"	"	"	PI4		"		"			"
		60	"			"	"	"	"	"	"	"	"		"	"	"	"	PI3		"		"			"
		61	"			"	"	"	"	"	"	"	"		"	"	"	"	PI2		"		"			"
		62	"			"	"	"	"	"	"	"	"		"	"	"	"	PI1		"		"			"
		63	"			"	"	"	"	"	"	"	"		"	"	"	"	P/S control		"		"			"
		64	"			"	"	"	"	"	"	"	"		"	"	"	"	Clock		"		"			"
		65	"			"	"	"	"	"	"	"	"		"	"	"	"	Serial In		"		"			"
		66	"			"	"	"	"	"	"	"	"		"	"	"	"	PI5		"		"			"
		67	"			"	"	"	"	"	"	"	"		"	"	"	"	PI6		"		"			"
		68	"			"	"	"	"	"	"	"	"		"	"	"	"	PI7		"		"			"
																				Subgroup 4 T_C = 25°C						
																				Min	Max					
C_i	3012	69	11/							GND								GND	PI8		12					pF
		70				11/				"								"	PI4		"					"
		71					11/			"								"	PI3		"					"
		72						11/		"								"	PI2		"					"
		73							11/	"								"	PI1		"					"
		74								"	11/							"	P/S control		"					"
		75								"		11/						"	Clock		"					"
		76								"			11/					"	Serial In		"					"
		77								"					11/			"	PI5		"					"
		78								"						11/		"	PI6		"					"
		79								"							11/	"	PI7		"					"

See footnotes at end of device type 02.

TABLE III. Group A inspection for device type 02 – Continued.

Symbol	MIL-STD-883 method	Cases E,F,N, Z	Terminal conditions and limits 1/																Measured terminal	Test limits						Unit
			PI8	Q6	Q8	PI4	PI3	PI2	PI1	V_{SS}	P/S Control	Clock	Serial In	Q7	PI5	PI6	PI7	V_{DD}		Subgroup 7 T_C = 25°C		Subgroup 8 T_C = 125°C		Subgroup 8 T_C = 125°C		
		Test no.	1	2	3	4	5	6	7	8	9	10	11	12	13	14	15	16		Min	Max	Min	Max	Min	Max	
Truth table test 12/	3014	80	5.0V			5.0V	5.0V	5.0V	5.0V	GND	5.0V	5.0V	GND		5.0V	5.0V	5.0V	5.0V	None	See 13/ and 14/						
		81	5.0V			5.0V	5.0V	5.0V	5.0V	"	5.0V	GND	"		5.0V	5.0V	5.0V	"	None							
		82	5.0V	H	H	5.0V	5.0V	5.0V	5.0V	"	5.0V	5.0V	"	H	5.0V	5.0V	5.0V	"	All							
		83	GND	"	"	GND	GND	GND	GND	"	GND	5.0V	"	"	GND	GND	GND	"	outputs							
		84	"	"	"	"	"	"	"	"	"	GND	"	"	"	"	"	"	"							
		85	"	"	"	"	"	"	"	"	"	5.0V	"	"	"	"	"	"	"							
		86	"	"	"	"	"	"	"	"	"	5.0V	5.0V	"	"	"	"	"	"							
		87	"	"	"	"	"	"	"	"	"	GND	"	"	"	"	"	"	"							
		88	"	"	"	"	"	"	"	"	"	5.0V	"	"	"	"	"	"	"							
		89	"	"	"	"	"	"	"	"	"	GND	"	"	"	"	"	"	"							
		90	"	"	"	"	"	"	"	"	"	5.0V	"	"	"	"	"	"	"							
		91	"	"	"	"	"	"	"	"	"	GND	"	"	"	"	"	"	"							
		92	"	"	"	"	"	"	"	"	"	5.0V	"	"	"	"	"	"	"							
		93	"	"	"	"	"	"	"	"	"	GND	"	"	"	"	"	"	"							
		94	"	"	"	"	"	"	"	"	"	5.0V	"	"	"	"	"	"	"							
		95	"	"	"	"	"	"	"	"	"	GND	"	"	"	"	"	"	"							
		96	"	L	"	"	"	"	"	"	"	5.0V	"	"	"	"	"	"	"							
		97	"	L	"	"	"	"	"	"	"	GND	"	"	"	"	"	"	"							
		98	"	H	"	"	"	"	"	"	"	5.0V	"	L	"	"	"	"	"							
		99	"	"	"	"	"	"	"	"	"	GND	"	L	"	"	"	"	"							
		100	"	"	L	"	"	"	"	"	"	5.0V	"	H	"	"	"	"	"							
		101	"	"	L	"	"	"	"	"	"	GND	"	"	"	"	"	"	"							
		102	"	"	H	"	"	"	"	"	"	5.0V	"	"	"	"	"	"	"							
		103	"	"	H	"	"	"	"	"	5.0V	5.0V	GND	"	"	"	"	"	"							
		104	"	"	H	"	"	"	"	"	5.0V	GND	"	"	"	"	"	"	"							
		105	"	L	L	"	"	"	"	"	5.0V	5.0V	"	L	"	"	"	"	"							
		106	5.0V	L	L	5.0V	5.0V	5.0V	5.0V	"	GND	GND	"	L	5.0V	5.0V	5.0V	"	"							

See footnotes at end of device type 02.

TABLE III. Group A inspection for device type 02 – Continued.

Symbol	MIL-STD-883 method	Cases E,F,N, Z	Terminal conditions and limits 1/																Measured terminal	Test limits						Unit
			PI8	Q6	Q8	PI4	PI3	PI2	PI1	V_{SS}	P/S Control	Clock	Serial In	Q7	PI5	PI6	PI7	V_{DD}		Subgroup 7 T_C = 25°C		Subgroup 8 T_C = 125°C		Subgroup 8 T_C = -55°C		
		Test no.	1	2	3	4	5	6	7	8	9	10	11	12	13	14	15	16		Min	Max	Min	Max	Min	Max	
Truth table test 12/	3014	107	5.0V	L	L	5.0V	5.0V	5.0V	5.0V	GND	GND	5.0V	GND	L	5.0V	5.0V	5.0V	5.0V	All outputs	See 13/ and 14/						
		108	“	“	“	“	“	“	“	“	“	GND	“	“	“	“	“	“								
		109	“	“	“	“	“	“	“	“	“	5.0V	“	“	“	“	“	“	“							
		110	“	“	“	“	“	“	“	“	“	GND	“	“	“	“	“	“	“							
		111	“	“	“	“	“	“	“	“	“	5.0V	“	“	“	“	“	“	“							
		112	“	“	“	“	“	“	“	“	“	GND	“	“	“	“	“	“	“							
		113	“	“	“	“	“	“	“	“	“	5.0V	“	“	“	“	“	“	“							
		114	“	“	“	“	“	“	“	“	“	GND	“	“	“	“	“	“	“							
		115	“	“	“	“	“	“	“	“	“	5.0V	“	“	“	“	“	“	“							
		116	“	“	“	“	“	“	“	“	5.0V	GND	5.0V	“	“	“	“	“	“							
		117	“	H	H	“	“	“	“	“	5.0V	5.0V	5.0V	H	“	“	“	“	“							
		118	GND	“	“	GND	GND	GND	GND	“	GND	GND	GND	“	GND	GND	GND	“	“							
		119	“	“	“	“	“	“	“	“	“	5.0V	“	“	“	“	“	“	“							
		120	“	“	“	“	“	“	“	“	“	GND	“	“	“	“	“	“	“							
		121	“	“	“	“	“	“	“	“	“	5.0V	“	“	“	“	“	“	“							
		122	“	“	“	“	“	“	“	“	“	GND	“	“	“	“	“	“	“							
		123	“	“	“	“	“	“	“	“	“	5.0V	“	“	“	“	“	“	“							
		124	“	“	“	“	“	“	“	“	“	GND	“	“	“	“	“	“	“							
		125	“	“	“	“	“	“	“	“	“	5.0V	“	“	“	“	“	“	“							
		126	“	“	“	“	“	“	“	“	“	GND	“	“	“	“	“	“	“							
		127	“	“	“	“	“	“	“	“	“	5.0V	“	“	“	“	“	“	“							

See footnotes at end of device type 02.

TABLE III. Group A inspection for device type 02 – Continued.

Symbol	MIL-STD-883 method	Cases E,F,N, Z	Terminal conditions and limits 1/																Measured terminal	Test limits						Unit
			PI8	Q6	Q8	PI4	PI3	PI2	PI1	V_{SS}	P/S Control	Clock	Serial In	Q7	PI5	PI6	PI7	V_{DD}		Subgroup 9 T_C = 25°C		Subgroup 10 T_C = 125°C		Subgroup 11 T_C = -55°C		
		Test no.	1	2	3	4	5	6	7	8	9	10	11	12	13	14	15	16		Min	Max	Min	Max	Min	Max	
t_{PHL1}	3003 Fig. 4	128	IN	OUT		IN	IN	IN	IN	GND	GND	IN	IN		IN	IN	IN	5.0V	Clock to Q6	13	975	18	1465	13	975	ns
		129	"			"	"	"	"	"	"	"	"	OUT	"	"	"	"	Clock to Q7	"	"	"	"	"	"	"
		130	"		OUT	"	"	"	"	"	"	"	"		"	"	"	"	Clock to Q8	"	"	"	"	"	"	"
t_{PLH1}		131	"	OUT		"	"	"	"	"	"	"	"		"	"	"	"	Clock to Q6	"	"	"	"	"	"	"
		132	"			"	"	"	"	"	"	"	"	OUT	"	"	"	"	Clock to Q7	"	"	"	"	"	"	"
		133	"		OUT	"	"	"	"	"	"	"	"		"	"	"	"	Clock to Q8	"	"	"	"	"	"	"
t_{PHL2}		134	"	OUT		"	"	"	"	"	5.0V	"	"		"	"	"	"	Clock to Q6	"	"	"	"	"	"	"
		135	"			"	"	"	"	"	"	"	"	OUT	"	"	"	"	Clock to Q7	"	"	"	"	"	"	"
		136	"		OUT	"	"	"	"	"	"	"	"		"	"	"	"	Clock to Q8	"	"	"	"	"	"	"
t_{PLH2}		137	"	OUT		"	"	"	"	"	"	"	"		"	"	"	"	Clock to Q6	"	"	"	"	"	"	"
		138	"			"	"	"	"	"	"	"	"	OUT	"	"	"	"	Clock to Q7	"	"	"	"	"	"	"
		139	"		OUT	"	"	"	"	"	"	"	"		"	"	"	"	Clock to Q8	"	"	"	"	"	"	"
t_{THL}	3004 Fig. 4	140	"	OUT		"	"	"	"	"	"	"	"		"	"	"	"	Q6	10	650	14	975	10	650	"
		141	"			"	"	"	"	"	"	"	"	OUT	"	"	"	"	Q7	"	650	"	975	"	650	"
		142	"		OUT	"	"	"	"	"	"	"	"		"	"	"	"	Q8	"	650	"	975	"	650	"
t_{TLH}		143	"	OUT		"	"	"	"	"	"	"	"		"	"	"	"	Q6	"	900	"	1350	"	900	"
		144	"			"	"	"	"	"	"	"	"	OUT	"	"	"	"	Q7	"	900	"	1350	"	900	"
		145	"		OUT	"	"	"	"	"	"	"	"		"	"	"	"	Q8	"	900	"	1350	"	900	"
f_{CL} (max) 15/		146		OUT						"	GND	"	"					"	Clock		1.0		1.4		1.0	µs
		147								"	GND	"	"	OUT				"	Clock		1.0		1.4		1.0	µs
		148			OUT					"	GND	"	"					"	Clock		1.0		1.4		1.0	µs

See footnotes on next page.

TABLE III. Group A inspection for device type 02 – Continued.

1/ Terminals not designated may be “HIGH” level logic, “LOW” level logic, or open except as follows:
$V_{IC(POS)}$ tests; the V_{SS} terminal shall be open.
$V_{IC(NEG)}$ tests; the V_{DD} terminal shall be open.
I_{SS} tests; the output terminals shall be open.

2/ Test numbers 23 through 32 shall be run in sequence. See 4.5.3.

3/ V_{IH1} = 3.8 V at 25°C, 3.6 V at 125°C, 3.95 V at -55°C.

4/ I_{OH} = -80 μA at 25°C, -55 μA at 125°C, -100 μA at -55°C.

5/ Apply clock pulse; V_{IN} = 0 V to V_{DD} until proper output state is achieved.

6/ V_{IH2} = 9.5 V at 25°C, 9.25 V at 125°C, 9.75 V at -55°C.

7/ I_{OL} = 120 μA at 25°C, 85 μA at 125°C, 150 μA at -55°C.

8/ V_{IL1} = 1.1 V at 25°C, 0.85 V at 125°C, 1.35 V at -55°C.

9/ V_{IL2} = 2.8 V at 25°C, 2.55 V at 125°C, 3.05 V at -55°C.

10/ The device manufacturer may, at his option, measure I_{IL} and I_{IH} at 25°C for each individual input or measure all inputs together.

11/ See 4.4.1c.

12/ Test numbers 80 through 127 shall be run in sequence.

13/ The output voltage limits for each temperature are “H” = V_{DD} –0.5 V min. and “L” = V_{SS} +0.5 V max.

14/ The functional tests shall be performed at V_{IH} and $V_{DD} \leq 5.0$ V and ≥ 15 V.

15/ The maximum clock frequency (f_{CL}) requirement is considered met if proper output state changes occur with the pulse repetition period set to that given in the limits column.

TABLE III. Group A inspection for device type 03.

Symbol	MIL-STD-883 method	Cases E,F,N,Z	Terminal conditions and limits 1/																Measured terminal	Test limits						Unit
			Clock B	Q4B	Q3A	Q2A	Q1A	Reset A	Data A	V_{SS}	Clock A	Q4A	Q3B	Q2B	Q1B	Reset B	Data B	V_{DD}		Subgroup 1 T_C = 25°C		Subgroup 2 T_C = 125°C		Subgroup 3 T_C = -55°C		
		Test no.	1	2	3	4	5	6	7	8	9	10	11	12	13	14	15	16		Min	Max	Min	Max	Min	Max	
V_{IC} (POS)		1									1mA							GND	Clock A		1.5					V
		2							1mA									"	Data A		"					"
		3						1mA										"	Reset A		"					"
		4	1mA															"	Clock B		"					"
		5															1mA	"	Data B		"					"
		6														1mA		"	Reset B		"					"
V_{IC} (NEG)		7								GND	-1mA								Clock A		-6					"
		8							-1mA	"									Data A		"					"
		9						-1mA		"									Reset A		"					"
		10	-1mA							"									Clock B		"					"
		11								"							-1mA		Data B		"					"
		12								"						-1mA			Reset B		"					"
I_{SS} 2/	3005	13	GND					15.0V	15.0V	"	GND					15.0V	15.0V	15.0V	V_{SS}		-0.5		-5.0			µA
		14	15.0V					15.0V	"	"	15.0V					15.0V	"	"	None		"		"			"
		15	15.0V					GND	"	"	15.0V					GND	"	"	"		"		"			"
		16	GND					"	"	"	GND					"	"	"	"		"		"			"
		17	15.0V					"	"	"	15.0V					"	"	"	"		"		"			"
		18	15.0V					"	GND	"	15.0V					"	GND	"	"		"		"			"
		19	GND					"	GND	"	GND					"	GND	"	"		"		"			"
		20	15.0V					"	GND	"	15.0V					"	GND	"	"		"		"			"
		21	15.0V					"	15.0V	"	15.0V					"	15.0V	"	"		"		"			"
		22	GND					"	15.0V	"	GND					"	15.0V	"	"		"		"			"
		23	15.0V					"	15.0V	"	15.0V					"	15.0V	"	"		"		"			"
		24	15.0V					"	GND	"	15.0V					"	GND	"	V_{SS}		"		"			"
		25	GND					"	GND	"	GND					"	GND	"	V_{SS}		"		"			"
		26	15.0V					"	GND	"	15.0V					"	GND	"	None		"		"			"
		27	15.0V					"	15.0V	"	15.0V					"	15.0V	"	V_{SS}		"		"			"
V_{OH1}	3006	28	GND				I_{OH} 4/	V_{IL1} 5/	V_{IH1} 6/	"	3/					GND	GND	5.0V	Q1A	4.5		4.5		4.5		V
		29	"			I_{OH}		"	"	"	"					"	"	"	Q2A	"		"		"		"
		30	"		I_{OH}			"	"	"	"					"	"	"	Q3A	"		"		"		"
		31	"					"	"	"	"	I_{OH}				"	"	"	Q4A	"		"		"		"
		32	3/					GND	GND	"	GND				I_{OH}	V_{IL1}	V_{IH1}	"	Q1B	"		"		"		"
		33	"					"	"	"	"			I_{OH}		"	"	"	Q2B	"		"		"		"
		34	"					"	"	"	"		I_{OH}			"	"	"	Q3B	"		"		"		"
		35	"	I_{OH}				"	"	"	"					"	"	"	Q4B	"		"		"		"
V_{OH2}		36	GND					V_{IL2} 7/	V_{IH2} 8/	"	3/					GND	GND	12.5V	Q1A	11.25		11.25		11.25		"
		37	"					"	"	"	"					"	"	"	Q2A	"		"		"		"
		38	"					"	"	"	"					"	"	"	Q3A	"		"		"		"
		39	"					"	"	"	"					"	"	"	Q4A	"		"		"		"
		40	3/					GND	GND	"	GND					V_{IL2}	V_{IH2}	"	Q1B	"		"		"		"
		41	"					"	"	"	"					"	"	"	Q2B	"		"		"		"
		42	"					"	"	"	"					"	"	"	Q3B	"		"		"		"
		43	"					"	"	"	"					"	"	"	Q4B	"		"		"		"

See footnotes at end of device type 03.

TABLE III. Group A inspection for device type 03 – Continued.

Symbol	MIL-STD-883 method	Cases E,F,N,Z	Terminal conditions and limits 1/																Measured terminal	Test limits						Unit
			Clock B	Q4B	Q3A	Q2A	Q1A	Reset A	Data A	V_{SS}	Clock A	Q4A	Q3B	Q2B	Q1B	Reset B	Data B	V_{DD}		Subgroup 1 T_C = 25°C		Subgroup 2 T_C = 125°C		Subgroup 3 T_C = -55°C		
		Test no.	1	2	3	4	5	6	7	8	9	10	11	12	13	14	15	16		Min	Max	Min	Max	Min	Max	
V_{OL1}	3007	44	GND				I_{OL} 9/	V_{IL1}	V_{IL1}	GND	3/					GND	GND	5.0V	Q1A		0.5		0.5		0.5	V
		45	"			I_{OL}		"	"	"	"					"	"	"	Q2A		"		"		"	"
		46	"		I_{OL}			"	"	"	"					"	"	"	Q3A		"		"		"	"
		47	"					"	"	"	"	I_{OL}				"	"	"	Q4A		"		"		"	"
		48	3/					GND	GND	"	GND				I_{OL}	V_{IL1}	V_{IL1}	"	Q1B		"		"		"	"
		49	"					"	"	"	"			I_{OL}		"	"	"	Q2B		"		"		"	"
		50	"					"	"	"	"		I_{OL}			"	"	"	Q3B		"		"		"	"
		51	"	I_{OL}				"	"	"	"					"	"	"	Q4B		"		"		"	"
V_{OL2}		52	GND					V_{IL2}	V_{IL2}	"	3/					GND	GND	12.5V	Q1A		1.25		1.25		1.25	"
		53	"					"	"	"	"					"	"	"	Q2A		"		"		"	"
		54	"					"	"	"	"					"	"	"	Q3A		"		"		"	"
		55	"					"	"	"	"					"	"	"	Q4A		"		"		"	"
		56	3/					GND	GND	"	GND					V_{IL2}	V_{IL2}	"	Q1B		"		"		"	"
		57	"					"	"	"	"					"	"	"	Q2B		"		"		"	"
		58	"					"	"	"	"					"	"	"	Q3B		"		"		"	"
		59	"					"	"	"	"					"	"	"	Q4B		"		"		"	"
I_{IH1} 10/	3010	60	15.0V					15.0V	15.0V	GND	15.0V					15.0V	15.0V	15.0V	All inputs together		600					nA
I_{IH2}		61	GND					GND	GND	"	15.0V					GND	GND	"	Clock A		100		100			"
		62	GND					GND	15.0V	"	GND					"	"	"	Data A		"		"			"
		63	GND					15.0V	GND	"	"					"	"	"	Reset A		"		"			"
		64	15.0V					GND	"	"	"					"	"	"	Clock B		"		"			"
		65	GND					"	"	"	"					"	15.0V	"	Data B		"		"			"
		66	"					"	"	"	"					15.0V	GND	"	Reset B		"		"			"
I_{IL1} 10/	3009	67	"					"	"	"	"					GND	GND	"	All inputs together		-600					"
I_{IL2}		68	"					"	"	"	"					"	"	"	Clock A		-100		-100			"
		69	"					"	"	"	"					"	"	"	Data A		"		"			"
		70	"					"	"	"	"					"	"	"	Reset A		"		"			"
		71	"					"	"	"	"					"	"	"	Clock B		"		"			"
		72	"					"	"	"	"					"	"	"	Data B		"		"			"
		73	"					"	"	"	"					"	"	"	Reset B		"		"			"
																				Subgroup 4 T_C = 25°C						Unit
																				Min	Max					
C_i	3012	74								GND	11/							GND	Clock A		12					pF
		75							11/	"								"	Data A		"					"
		76						11/		"								"	Reset A		"					"
		77	11/							"								"	Clock B		"					"
		78								"							11/	"	Data B		"					"
		79								"						11/		"	Reset B		"					"

See footnotes at end of device type 03.

TABLE III. Group A inspection for device type 03 – Continued.

Symbol	MIL-STD-883 method	Cases E,F,N,Z	Terminal conditions and limits 1/																Measured terminal	Test limits						Unit
			Clock B	Q4B	Q3A	Q2A	Q1A	Reset A	Data A	V_{SS}	Clock A	Q4A	Q3B	Q2B	Q1B	Reset B	Data B	V_{DD}		Subgroup 7 T_C = 25°C		Subgroup 8 T_C = 125°C		Subgroup 8 T_C = -55°C		
		Test no.	1	2	3	4	5	6	7	8	9	10	11	12	13	14	15	16		Min	Max	Min	Max	Min	Max	
Truth table test 12/	3014	80	5.0V	L	L	L	L	5.0V	5.0V	GND	5.0V	L	L	L	L	5.0V	5.0V	5.0V	All outputs	See 13/, 14/						
		81	5.0V	"	"	"	L	GND	"	"	5.0V	"	"	"	L	GND	"	"								
		82	GND	"	"	"	L	"	"	"	GND	"	"	"	L	"	"	"	"							
		83	5.0V	"	"	"	H	"	"	"	5.0V	"	"	"	H	"	"	"	"							
		84	5.0V	"	"	"	H	"	GND	"	5.0V	"	"	"	H	"	GND	"	"							
		85	GND	"	"	"	H	"	GND	"	GND	"	"	"	H	"	GND	"	"							
		86	5.0V	"	"	H	L	"	GND	"	5.0V	"	"	H	L	"	GND	"	"							
		87	5.0V	"	"	H	L	"	5.0V	"	5.0V	"	"	H	L	"	5.0V	"	"							
		88	GND	"	"	H	L	"	"	"	GND	"	"	H	L	"	"	"	"							
		89	5.0V	"	H	L	H	"	"	"	5.0V	"	H	L	H	"	"	"	"							
		90	GND	"	H	L	"	"	"	"	GND	"	H	L	"	"	"	"	"							
		91	5.0V	H	L	H	"	"	"	"	5.0V	H	L	H	"	"	"	"	"							
		92	GND	H	L	"	"	"	"	"	GND	H	L	"	"	"	"	"	"							
		93	5.0V	L	H	"	"	"	"	"	5.0V	L	H	"	"	"	"	"	"							
		94	GND	L	"	"	"	"	"	"	GND	L	"	"	"	"	"	"	"							
		95	5.0V	H	"	"	"	"	"	"	5.0V	H	"	"	"	"	"	"	"							
		96	GND	H	"	"	"	"	"	"	GND	H	"	"	"	"	"	"	"							
		97	GND	L	L	L	L	5.0V	"	"	GND	L	L	L	L	5.0V	"	"	"							
		98	5.0V	L	L	L	L	5.0V	"	"	5.0V	L	L	L	L	5.0V	"	"	"							
																				Subgroup 9 T_C = 25°C		Subgroup 10 T_C = 125°C		Subgroup 11 T_C = -55°C		
																				Min	Max	Min	Max	Min	Max	
t_{PHL1}	3003 Fig. 4	99					OUT	GND	IN	GND	IN					GND		5.0V	Clock A to Q1A	20	975	30	1465	20	975	ns
		100				OUT		"	"	"	"					"		"	Clock A to Q2A	"	"	"	"	"	"	"
		101			OUT			"	"	"	"					"		"	Clock A to Q3A	"	"	"	"	"	"	"
		102						"	"	"	"	OUT				"		"	Clock A to Q4A	"	"	"	"	"	"	"
		103	IN					"		"					OUT	"	IN	"	Clock B to Q1B	"	"	"	"	"	"	"
		104	IN					GND		GND				OUT		GND	IN	5.0V	Clock B to Q2B	20	975	30	1465	20	975	ns
		105	"					"		"			OUT			"	"	"	Clock B to Q3B	"	"	"	"	"	"	"
		106	"	OUT				"		"						"	"	"	Clock B to Q4B	"	"	"	"	"	"	"

See footnotes at end of device type 03.

TABLE III. Group A inspection for device type 03 – Continued.

Symbol	MIL-STD-883 method	Cases E,F,N,Z	Terminal conditions and limits 1/																Measured terminal	Test limits						Unit
			Clock B	Q4B	Q3A	Q2A	Q1A	Reset A	Data A	V_{SS}	Clock A	Q4A	Q3B	Q2B	Q1B	Reset B	Data B	V_{DD}		Subgroup 9 T_C = 25°C		Subgroup 10 T_C = 125°C		Subgroup 11 T_C = -55°C		
		Test no.	1	2	3	4	5	6	7	8	9	10	11	12	13	14	15	16		Min	Max	Min	Max	Min	Max	
t_{PLH1}	3003 Fig. 4	107					OUT	GND	IN	GND	IN					GND		5.0V	Clock A to Q1A	20	975	30	1465	20	975	ns
		108				OUT		"	"	"	"					"		"	Clock A to Q2A	"	"	"	"	"	"	"
		109			OUT			"	"	"	"					"		"	Clock A to Q3A	"	"	"	"	"	"	"
		110						"	"	"	"	OUT				"		"	Clock A to Q4A	"	"	"	"	"	"	"
		111	IN					"		"					OUT	"	IN	"	Clock B to Q1B	"	"	"	"	"	"	"
		112	"					"		"				OUT		"	"	"	Clock B to Q2B	"	"	"	"	"	"	"
		113	"					"		"			OUT			"	"	"	Clock B to Q3B	"	"	"	"	"	"	"
		114	"	OUT				"		"						"	"	"	Clock B to Q4B	"	"	"	"	"	"	"
t_{PHL2}	3003 Fig. 4	115	GND				OUT	IN		"	GND							"	Reset to Q1A	"	"	"	"	"	"	"
		116	"			OUT		"		"	"							"	Reset to Q2A	"	"	"	"	"	"	"
		117	"		OUT			"		"	"							"	Reset to Q3A	"	"	"	"	"	"	"
		118	"					"		"	"	OUT						"	Reset to Q4A	"	"	"	"	"	"	"
		119	"							"	"				OUT	IN		"	Reset to Q1B	"	"	"	"	"	"	"
		120	"							"	"			OUT		"		"	Reset to Q2B	"	"	"	"	"	"	"
		121	"							"	"		OUT			"		"	Reset to Q3B	"	"	"	"	"	"	"
		122	"	OUT						"	"					"		"	Reset to Q4B	"	"	"	"	"	"	"
t_{THL}	3004 Fig. 4	123					OUT	GND	IN	"	IN					GND		"	Q1A	13	650	18	975	13	650	"
		124				OUT		"	"	"	"					"		"	Q2A	"	"	"	"	"	"	"
		125			OUT			"	"	"	"					"		"	Q3A	"	"	"	"	"	"	"
		126						"	"	"	"	OUT				"		"	Q4A	"	"	"	"	"	"	"
		127	IN					"		"					OUT	"	IN	"	Q1B	"	"	"	"	"	"	"
		128	"					"		"				OUT		"	"	"	Q2B	"	"	"	"	"	"	"
		129	"					"		"			OUT			"	"	"	Q3B	"	"	"	"	"	"	"
		130	"	OUT				"		"						"	"	"	Q4B	"	"	"	"	"	"	"
t_{TLH}	3004 Fig. 4	131					OUT	"	IN	"	IN					"		"	Q1A	"	975	"	1465	"	975	"
		132				OUT		"	"	"	"					"		"	Q2A	"	"	"	"	"	"	"
		133			OUT			"	"	"	"					"		"	Q3A	"	"	"	"	"	"	"
		134						"	"	"	"	OUT				"		"	Q4A	"	"	"	"	"	"	"
		135	IN					"		"					OUT	"	IN	"	Q1B	"	"	"	"	"	"	"
		136	"					"		"				OUT		"	"	"	Q2B	"	"	"	"	"	"	"
		137	"					"		"			OUT			"	"	"	Q3B	"	"	"	"	"	"	"
		138	"	OUT				"		"						"	"	"	Q4B	"	"	"	"	"	"	"

See footnotes at end of device type 03.

TABLE III. Group A inspection for device type 03 – Continued.

Symbol	MIL-STD-883 method	Cases E,F,N,Z	Terminal conditions and limits 1/																Measured terminal	Test limits						Unit
			Clock B	Q4B	Q3A	Q2A	Q1A	Reset A	Data A	V_{SS}	Clock A	Q4A	Q3B	Q2B	Q1B	Reset B	Data B	V_{DD}		Subgroup 9 T_C = 25°C		Subgroup 10 T_C = 125°C		Subgroup 11 T_C = -55°C		
		Test no.	1	2	3	4	5	6	7	8	9	10	11	12	13	14	15	16		Min	Max	Min	Max	Min	Max	
f_{CL} (max) 15/		139					OUT	GND	IN	GND	IN					GND		5.0V	Clock A		1.0		1.4		1.0	µs
		140				OUT		"	"	"	"					"		"	"		"		"		"	"
		141			OUT			"	"	"	"					"		"	"		"		"		"	"
		142						"	"	"	"	OUT				"		"	"		"		"		"	"
		143	IN					"		"					OUT	"	IN	"	Clock B		"		"		"	"
		144	"					"		"				OUT		"	"	"	"		"		"		"	"
		145	"					"		"			OUT			"	"	"	"		"		"		"	"
		146	"	OUT				"		"						"	"	"	"		"		"		"	"

1/ Terminals not designated may be "HIGH" level logic, "LOW" level logic, or open except as follows:
$V_{IC(POS)}$ tests; the V_{SS} terminal shall be open.
$V_{IC(NEG)}$ tests; the V_{DD} terminal shall be open.
I_{SS} tests; the output terminals shall be open.

2/ Test numbers 13 through 27 shall be run in sequence. See 4.5.3.

3/ Apply clock pulse; V_{IN} = 0 V to V_{DD} until proper output state is achieved.

4/ I_{OH} = -80 µA at 25°C, -55 µA at 125°C, -100 µA at -55°C.

5/ V_{IL1} = 1.1 V at 25°C, 0.85 V at 125°C, 1.35 V at -55°C.

6/ V_{IH1} = 3.8 V at 25°C, 3.6 V at 125°C, 3.95 V at -55°C.

7/ V_{IL2} = 2.8 V at 25°C, 2.55 V at 125°C, 3.05 V at -55°C.

8/ V_{IH2} = 9.5 V at 25°C, 9.25 V at 125°C, 9.75 V at -55°C.

9/ I_{OL} = 120 µA at 25°C, 85 µA at 125°C, 150 µA at -55°C.

10/ The device manufacturer may, at his option, measure I_{IL} and I_{IH} at 25°C for each individual input or measure all inputs together.

11/ See 4.4.1c.

12/ Test numbers 80 through 98 shall be run in sequence.

13/ The output voltage limits for each temperature are "H" = V_{DD} –0.5 V min. and "L" = V_{SS} +0.5 V max.

14/ The functional tests shall be performed at V_{IH} and $V_{DD} \leq 5.0$ V and ≥ 15 V.

15/ The maximum clock frequency (f_{CL}) requirement is considered met if proper output state changes occur with the pulse repetition period set to that given in the limits column.

TABLE III. Group A inspection for device type 04.

Symbol	MIL-STD-883 method	Cases E,F,N, Z	Terminal conditions and limits 1/																Measured terminal	Test limits						Unit
			PI8	Q6	Q8	PI4	PI3	PI2	PI1	V_{SS}	P/S control	Clock	Serial In	Q7	PI5	PI6	PI7	V_{DD}		Subgroup 1 T_C = 25°C		Subgroup 2 T_C = 125°C		Subgroup 3 T_C = -55°C		
		Test no.	1	2	3	4	5	6	7	8	9	10	11	12	13	14	15	16		Min	Max	Min	Max	Min	Max	
V_{IC} (POS)		1	1mA															GND	PI8		1.5					V
		2				1mA												"	PI4		"					"
		3					1mA											"	PI3		"					"
		4						1mA										"	PI2		"					"
		5							1mA									"	PI1		"					"
		6									1mA							"	P/S control		"					"
		7										1mA						"	Clock		"					"
		8											1mA					"	Serial IN		"					"
		9													1mA			"	PI5		"					"
		10														1mA		"	PI6		"					"
		11															1mA	"	PI7		"					"
V_{IC} (NEG)		12	-1mA							GND									PI8		-6					"
		13				-1mA				"									PI4		"					"
		14					-1mA			"									PI3		"					"
		15						-1mA		"									PI2		"					"
		16							-1mA	"									PI1		"					"
		17								"									P/S control		"					"
		18								"		-1mA							Clock		"					"
		19								"			-1mA						Serial IN		"					"
		20								"					-1mA				PI5		"					"
		21								"						-1mA			PI6		"					"
		22								"							-1mA		PI7		"					"
I_{SS} 2/	3005	23	GND			GND	15.0V	GND	15.0V	"	15.0V	GND	GND		15.0V	GND	15.0V	15.0V	V_{SS}		-0.5		-5.0			µA
		24	15.0V			15.0V	GND	15.0V	GND	"	15.0V	GND	15.0V		GND	15.0V	GND	"	V_{SS}		"		"			"
		25	15.0V			15.0V	GND	15.0V	GND	"	15.0V	15.0V	15.0V		GND	15.0V	GND	"	None		"		"			"
		26	15.0V			15.0V	GND	15.0V	GND	"	GND	"	15.0V		GND	15.0V	GND	"	V_{SS}		"		"			"
		27	GND			GND	15.0V	GND	15.0V	"	15.0V	"	GND		15.0V	GND	15.0V	"	None		"		"			"
		28	GND			GND	15.0V	GND	15.0V	"	GND	"	GND		15.0V	GND	15.0V	"	V_{SS}		"		"			"
		29	GND			GND	15.0V	GND	15.0V	"	GND	GND	GND		15.0V	GND	15.0V	"	V_{SS}		"		"			"
V_{OH1}	3006	30	V_{IH1} 3/	I_{OH} 4/		V_{IH1}	V_{IH1}	V_{IH1}	V_{IH1}	"	V_{IH1}	5/	V_{IH1}		V_{IH1}	V_{IH1}	V_{IH1}	5.0V	Q6	4.5		4.5		4.5		V
		31	V_{IH1} 3/			V_{IH1}	V_{IH1}	V_{IH1}	V_{IH1}	"	V_{IH1}	"	V_{IH1}	I_{OH}	V_{IH1}	V_{IH1}	V_{IH1}	5.0V	Q7	4.5		4.5		4.5		"
		32	V_{IH1} 3/		I_{OH}	V_{IH1}	V_{IH1}	V_{IH1}	V_{IH1}	"	V_{IH1}	"	V_{IH1}		V_{IH1}	V_{IH1}	V_{IH1}	5.0V	Q8	4.5		4.5		4.5		"
V_{OH2}		33	V_{IH2} 6/			V_{IH2}	V_{IH2}	V_{IH2}	V_{IH2}	"	V_{IH2}	"	V_{IH2}		V_{IH2}	V_{IH2}	V_{IH2}	12.5V	Q6	11.25		11.25		11.25		"
		34	V_{IH2} 6/			V_{IH2}	V_{IH2}	V_{IH2}	V_{IH2}	"	V_{IH2}	"	V_{IH2}		V_{IH2}	V_{IH2}	V_{IH2}	12.5V	Q7	11.25		11.25		11.25		"
		35	V_{IH2} 6/			V_{IH2}	V_{IH2}	V_{IH2}	V_{IH2}	"	V_{IH2}	"	V_{IH2}		V_{IH2}	V_{IH2}	V_{IH2}	12.5V	Q8	11.25		11.25		11.25		"
V_{OL1}	3007	36	V_{IL1} 7/	I_{OL} 8/		V_{IL1}	V_{IL1}	V_{IL1}	V_{IL1}	"	V_{IL1}	"	V_{IL1}		V_{IL1}	V_{IL1}	V_{IL1}	5.0V	Q6		0.5		0.5		0.5	"
		37	V_{IL1} 7/			V_{IL1}	V_{IL1}	V_{IL1}	V_{IL1}	"	V_{IL1}	"	V_{IL1}	I_{OL}	V_{IL1}	V_{IL1}	V_{IL1}	5.0V	Q7		0.5		0.5		0.5	"
		38	V_{IL1} 7/		I_{OL}	V_{IL1}	V_{IL1}	V_{IL1}	V_{IL1}	"	V_{IL1}	"	V_{IL1}		V_{IL1}	V_{IL1}	V_{IL1}	5.0V	Q8		0.5		0.5		0.5	"
V_{OL2}		39	V_{IL2} 9/			V_{IL2}	V_{IL2}	V_{IL2}	V_{IL2}	"	V_{IL2}	"	V_{IL2}		V_{IL2}	V_{IL2}	V_{IL2}	12.5V	Q6		1.25		1.25		1.25	"
		40	V_{IL2} 9/			V_{IL2}	V_{IL2}	V_{IL2}	V_{IL2}	"	V_{IL2}	"	V_{IL2}		V_{IL2}	V_{IL2}	V_{IL2}	12.5V	Q7		1.25		1.25		1.25	"
		41	V_{IL2} 9/			V_{IL2}	V_{IL2}	V_{IL2}	V_{IL2}	"	V_{IL2}	"	V_{IL2}		V_{IL2}	V_{IL2}	V_{IL2}	12.5V	Q8		1.25		1.25		1.25	"
I_{IH1} 10/	3010	42	15.0V			15.0V	15.0V	15.0V	15.0V	"	15.0V	15.0V	15.0V		15.0V	15.0V	15.0V	15.0V	All inputs together		11.0					nA

See footnotes at end of device type 04.

TABLE III. Group A inspection for device type 04 – Continued.

Symbol	MIL-STD-883 method	Cases E,F,N, Z	Terminal conditions and limits 1/																Measured terminal	Test limits						Unit
			PI8	Q6	Q8	PI4	PI3	PI2	PI1	V_{SS}	P/S control	Clock	Serial In	Q7	PI5	PI6	PI7	V_{DD}		Subgroup 1 T_C = 25°C		Subgroup 2 T_C = 125°C		Subgroup 3 T_C = -55°C		
		Test no.	1	2	3	4	5	6	7	8	9	10	11	12	13	14	15	16		Min	Max	Min	Max	Min	Max	
I_{IH2}	3010	43	15.0V			GND	GND	GND	GND	GND	GND	GND	GND		GND	GND	GND	15.0V	PI8		1.0		45			nA
		44	GND			15.0V	GND	GND	"	"	"	"	"		"	"	"	"	PI4		"		"			"
		45	"			GND	15.0V	GND	"	"	"	"	"		"	"	"	"	PI3		"		"			"
		46	"			"	GND	15.0V	"	"	"	"	"		"	"	"	"	PI2		"		"			"
		47	"			"	"	GND	15.0V	"	"	"	"		"	"	"	"	PI1		"		"			"
		48	"			"	"	"	GND	"	15.0V	"	"		"	"	"	"	P/S control		"		"			"
		49	"			"	"	"	"	"	GND	15.0V	"		"	"	"	"	Clock		"		"			"
		50	"			"	"	"	"	"	"	GND	15.0V		"	"	"	"	Serial IN		"		"			"
		51	"			"	"	"	"	"	"	"	GND		15.0V	"	"	"	PI5		"		"			"
		52	"			"	"	"	"	"	"	"	GND		GND	15.0V	"	"	PI6		"		"			"
		53	"			"	"	"	"	"	"	"	GND		GND	GND	15.0V	"	PI7		"		"			"
I_{IL1} 10/	3010	54	GND			GND	GND	GND	GND	GND	GND	GND	GND		GND	GND	GND	15.0V	All inputs together		-11.0					nA
I_{IL2}		55	"			"	"	"	"	"	"	"	"		"	"	"	"	PI8		-1.0		-45			"
		56	"			"	"	"	"	"	"	"	"		"	"	"	"	PI4		"		"			"
		57	"			"	"	"	"	"	"	"	"		"	"	"	"	PI3		"		"			"
		58	"			"	"	"	"	"	"	"	"		"	"	"	"	PI2		"		"			"
		59	"			"	"	"	"	"	"	"	"		"	"	"	"	PI1		"		"			"
		60	"			"	"	"	"	"	"	"	"		"	"	"	"	P/S control		"		"			"
		61	"			"	"	"	"	"	"	"	"		"	"	"	"	Clock		"		"			"
		62	"			"	"	"	"	"	"	"	"		"	"	"	"	Serial IN		"		"			"
		63	"			"	"	"	"	"	"	"	"		"	"	"	"	PI5		"		"			"
		64	"			"	"	"	"	"	"	"	"		"	"	"	"	PI6		"		"			"
		65	"			"	"	"	"	"	"	"	"		"	"	"	"	PI7		"		"			"
																				Subgroup 4 T_C = 25°C						
																				Min	Max					
C_i	3012	66	11/							GND								GND	PI8		12					pF
		67				11/				"								"	PI4		"					"
		68					11/			"								"	PI3		"					"
		69						11/		"								"	PI2		"					"
		70							11/	"								"	PI1		"					"
		71								"	11/							"	P/S control		"					"
		72								"		11/						"	Clock		"					"
		73								"			11/					"	Serial IN		"					"
		74								"					11/			"	PI5		"					"
		75								"						11/		"	PI6		"					"
		76								"							11/	"	PI7		"					"

See footnotes at end of device type 04.

TABLE III. Group A inspection for device type 04 – Continued.

Symbol	MIL-STD-883 method	Cases E,F,N, Z	Terminal conditions and limits 1/																Measured terminal	Test limits						Unit
			PI8	Q6	Q8	PI4	PI3	PI2	PI1	V_{SS}	P/S control	Clock	Serial In	Q7	PI5	PI6	PI7	V_{DD}		Subgroup 7 T_C = 25°C		Subgroup 8 T_C = 125°C		Subgroup 8 T_C = -55°C		
		Test no.	1	2	3	4	5	6	7	8	9	10	11	12	13	14	15	16		Min	Max	Min	Max	Min	Max	
Truth table test 12/	3014	77	GND	L	L	GND	GND	GND	GND	GND	5.0V	5.0V	GND	L	GND	GND	GND	5.0V	All outputs	See 13/, 14/						
		78	GND	“	“	GND	GND	GND	GND	“	GND	5.0V	GND	“	GND	GND	GND	“								
		79	5.0V	“	“	5.0V	5.0V	5.0V	GND	“	“	15/	5.0V	“	5.0V	5.0V	5.0V	“	“							
		80	“	“	“	5.0V	5.0V	GND	5.0V	“	“	“	GND	“	“	“	“	“	“							
		81	“	“	“	5.0V	GND	5.0V	GND	“	“	“	5.0V	“	“	“	“	“	“							
		82	“	“	“	GND	5.0V	GND	“	“	“	“	“	“	“	“	“	“	“							
		83	“	“	“	5.0V	GND	“	“	“	“	“	“	“	GND	“	“	“	“							
		84	“	“	“	5.0V	“	“	“	“	“	GND	“	“	GND	“	“	“	“							
		85	“	H	“	GND	“	“	“	“	“	5.0V	“	“	5.0V	GND	“	“	“							
		86	“	H	“	“	“	“	“	“	“	GND	“	“	5.0V	GND	“	“	“							
		87	“	L	“	“	“	“	“	“	“	5.0V	“	H	GND	5.0V	GND	“	“							
		88	“	L	“	“	“	“	“	“	“	GND	“	H	“	5.0V	GND	“	“							
		89	GND	H	H	“	“	“	“	“	“	5.0V	“	L	“	GND	5.0V	“	“							
		90	5.0V	“	L	“	“	“	“	“	“	15/	“	H	“	“	GND	“	“							
		91	GND	“	H	“	“	“	“	“	“	15/	“	H	“	“	“	“	“							
		92	“	“	H	“	“	“	“	“	“	GND	“	H	“	“	“	“	“							
		93	“	L	L	“	“	“	“	“	5.0V	GND	“	L	“	“	“	“	“							
		94	“	“	“	“	“	“	“	“	GND	GND	GND	“	“	“	“	“	“							
		95	5.0V	“	“	5.0V	5.0V	5.0V	5.0V	“	“	5.0V	“	“	5.0V	5.0V	5.0V	“	“							
		96	“	“	“	“	“	“	“	“	“	15/	“	“	“	“	“	“	“							
		97	“	“	“	“	“	“	“	“	“	“	“	“	“	“	“	“	“							
		98	“	“	“	“	“	“	“	“	“	“	“	“	“	“	“	“	“							
		99	“	“	“	“	“	“	“	“	“	“	“	“	“	“	“	“	“							
		100	“	“	“	“	“	“	“	“	“	GND	“	“	“	“	“	“	“							
		101	“	H	H	“	“	“	“	“	5.0V	GND	“	H	“	“	“	“	“							
		102	“	“	“	“	“	“	“	“	GND	GND	5.0V	“	“	“	“	“	“							
		103	GND	“	“	GND	GND	GND	“	“	GND	5.0V	5.0V	“	GND	GND	GND	“	“							
		104	GND	“	“	GND	GND	5.0V	“	“	GND	15/	5.0V	“	GND	GND	GND	“	“							

See footnotes at end of device type 04.

TABLE III. Group A inspection for device type 04 – Continued.

Symbol	MIL-STD-883 method	Cases E,F,N, Z	Terminal conditions and limits 1/																Measured terminal	Test limits						Unit
			PI8	Q6	Q8	PI4	PI3	PI2	PI1	V_{SS}	P/S control	Clock	Serial In	Q7	PI5	PI6	PI7	V_{DD}		Subgroup 7 T_C=25°C		Subgroup 8 T_C=125°C		Subgroup 8 T_C=-55°C		
		Test no.	1	2	3	4	5	6	7	8	9	10	11	12	13	14	15	16		Min	Max	Min	Max	Min	Max	
Truth table test 12/	3014	105	GND	H	H	GND	5.0V	5.0V	5.0V	GND	GND	15/	5.0V	H	GND	GND	GND	5.0V	All outputs	See 13/, 14/						
		106	"	H	H	5.0V	5.0V	5.0V	5.0V	"	GND	15/	"	H	GND	"	"	"								
		107	"	H	H	5.0V	5.0V	5.0V	5.0V	"	GND	15/	"	H	5.0V	"	"	"	"							
		108	"	L	L	GND	GND	GND	GND	"	15/	5.0V	"	L	GND	"	"	"	"							
		109	"	"	"	GND	GND	"	"	"	GND	15/	"	"	GND	"	"	"	"							
		110	5.0V	"	"	5.0V	5.0V	"	"	"	"	"	"	"	5.0V	5.0V	5.0V	"	"							
		111	"	"	"	5.0V	GND	"	"	"	"	"	"	"	5.0V	"	"	"	"							
		112	"	"	"	GND	GND	"	"	"	"	"	"	"	5.0V	"	"	"	"							
		113	"	"	"	GND	GND	"	"	"	"	"	"	"	GND	"	"	"	"							
																				Subgroup 9 T_C=25°C		Subgroup 10 T_C=125°C		Subgroup 11 T_C=-55°C		
																				Min	Max	Min	Max	Min	Max	
t_{PHL1}	3003 Fig. 4	114	IN	OUT		GND	GND	GND	GND	GND	IN	GND			GND	IN	IN	5.0V	P/S control to Q6	20	975	30	1465	20	975	ns
		115	"			"	"	"	"	"	"	"		OUT	"	"	"	"	P/S control to Q7	"	"	"	"	"	"	"
		116	"		OUT	"	"	"	"	"	"	"			"	"	"	"	P/S control to Q8	"	"	"	"	"	"	"
t_{PLH1}		117	"	OUT		"	"	"	"	"	"	"			"	"	"	"	P/S control to Q6	"	"	"	"	"	"	"
		118	"			"	"	"	"	"	"	"		OUT	"	"	"	"	P/S control to Q7	"	"	"	"	"	"	"
		119	"		OUT	"	"	"	"	"	"	"			"	"	"	"	P/S control to Q8	"	"	"	"	"	"	"
t_{PHL2}		120		OUT						"	GND	IN	IN					"	Clock to Q6	"	"	"	"	"	"	"
		121								"	"	"	"	OUT				"	Clock to Q7	"	"	"	"	"	"	"
		122			OUT					"	"	"	"					"	Clock to Q8	"	"	"	"	"	"	"
t_{PLH2}		123		OUT						"	"	"	"					"	Clock to Q6	"	"	"	"	"	"	"
		124								"	"	"	"	OUT				"	Clock to Q7	"	"	"	"	"	"	"
		125			OUT					"	"	"	"					"	Clock to Q8	"	"	"	"	"	"	"
t_{THL}	3004 Fig. 4	126		OUT						"	"	"	"					"	Q6	13	700	18	1050	13	700	"
		127								"	"	"	"	OUT				"	Q7	"	700	"	1050	"	700	"
		128			OUT					"	"	"	"					"	Q8	"	700	"	1050	"	700	"
t_{TLH}		129		OUT						"	"	"	"					"	Q6	"	900	"	1350	"	900	"
		130								"	"	"	"	OUT				"	Q7	"	900	"	1350	"	900	"
		131			OUT					"	"	"	"					"	Q8	"	900	"	1350	"	900	"
f_{CL} (max) 13/		132		OUT						"	"	"	"					"	Clock		1.0		1.4		1.0	µs
		133								"	"	"	"	OUT				"	Clock		1.0		1.4		1.0	µs
		134			OUT					"	"	"	"					"	Clock		1.0		1.4		1.0	µs

See footnotes on next page.

TABLE III. Group A inspection for device type 04 – Continued.

1/ Terminals not designated may be “HIGH” level logic, “LOW” level logic, or open except as follows:
$V_{IC(POS)}$ tests; the V_{SS} terminal shall be open.
$V_{IC(NEG)}$ tests; the V_{DD} terminal shall be open.
I_{SS} tests; the output terminals shall be open.

2/ Test numbers 23 through 29 shall be run in sequence. See 4.5.3.

3/ V_{IH1} = 3.8 V at 25°C, 3.6 V at 125°C, 3.95 V at -55°C.

4/ I_{OH} = -80 μA at 25°C, -55 μA at 125°C, -100 μA at -55°C.

5/ Apply clock pulse; V_{IN} = 0 V to V_{DD} until proper output state is achieved.

6/ V_{IH2} = 9.5 V at 25°C, 9.25 V at 125°C, 9.75 V at -55°C.

7/ V_{IL1} = 1.1 V at 25°C, 0.85 V at 125°C, 1.35 V at -55°C.

8/ I_{OL} = 120 μA at 25°C, 85 μA at 125°C, 150 μA at -55°C.

9/ V_{IL2} = 2.8 V at 25°C, 2.55 V at 125°C, 3.05 V at -55°C.

10/ The device manufacturer may, at his option, measure I_{IL} and I_{IH} at 25°C for each individual input or measure all inputs together.

11/ See 4.4.1c.

12/ Test numbers 77 through 113 shall be run in sequence.

13/ The output voltage limits for each temperature are “H” = V_{DD} –0.5 V min. and “L” = V_{SS} +0.5 V max.

14/ The functional tests shall be performed at V_{IH} and $V_{DD} \leq 5.0$ V and ≥ 15 V.

15/ Apply clock pulse; V_{IN} = 0 V dc to V_{DD}.

16/ The maximum clock frequency (f_{CL}) requirement is considered met if proper output state changes occur with the pulse repetition period set to that given in the limits column.

TABLE III. Group A inspection for device type 05.

Symbol	MIL-STD-883 method	Cases E,F,N,Z	Terminal conditions and limits 1/																Measured terminal	Test limits						Unit
			Recirc. in	Clock	NC	NC	NC	Q	$\overline{Q}$	V_{SS}	Delayed clock	Mode cont.	NC	NC	NC	NC	Data in	V_{DD}		Subgroup 1 T_C=25°C		Subgroup 2 T_C=125°C		Subgroup 3 T_C=-55°C		
		Test no.	1	2	3	4	5	6	7	8	9	10	11	12	13	14	15	16		Min	Max	Min	Max	Min	Max	
V_{IC} (POS)		1	1mA															GND	Recirc in		1.5					V
		2		1mA														"	Clock		"					"
		3										1mA						"	Mode cont.		"					"
		4															1mA	"	Data in		"					"
V_{IC} (NEG)		5	-1mA							GND									Recirc in		-6					"
		6		-1mA						"									Clock		"					"
		7								"		-1mA							Mode cont.		"					"
		8								"							-1mA		Data in		"					"
I_{SS} 2/	3005	9	GND	3/						"		GND					15.0V	15.0V	None		-2.0		-20			µA
		10	"	"						"		"					GND	"	"		"		"			"
		11	"	"						"		"					15.0V	"	"		"		"			"
		12	"	"						"		"					GND	"	"		"		"			"
		13	"	"						"		"					15.0V	"	"		"		"			"
		14	"	"						"		"					GND	"	"		"		"			"
		15	"	"						"		"					15.0V	"	"		"		"			"
		16	"	"						"		"					GND	"	"		"		"			"
		17	"	"						"		"					15.0V	"	"		"		"			"
		18	"	"						"		"					GND	"	"		"		"			"
		19	"	"						"		"					15.0V	"	"		"		"			"
		20	"	"						"		"					GND	"	"		"		"			"
		21	"	"						"		"					15.0V	"	"		"		"			"
		22	"	"						"		"					GND	"	"		"		"			"
		23	"	"						"		"					15.0V	"	"		"		"			"
		24	"	"						"		"					GND	"	"		"		"			"
		25	"	"						"		"					15.0V	"	"		"		"			"
		26	"	"						"		"					GND	"	"		"		"			"
		27	"	"						"		"					15.0V	"	"		"		"			"
		28	"	"						"		"					GND	"	"		"		"			"
		29	"	"						"		"					15.0V	"	"		"		"			"
		30	"	"						"		"					GND	"	"		"		"			"
		31	"	"						"		"					15.0V	"	"		"		"			"
		32	"	"						"		"					GND	"	"		"		"			"
		33	"	"						"		"					15.0V	"	"		"		"			"
		34	"	"						"		"					GND	"	"		"		"			"
		35	"	"						"		"					15.0V	"	"		"		"			"
		36	"	"						"		"					GND	"	"		"		"			"
		37	"	"						"		"					15.0V	"	"		"		"			"
		38	"	"						"		"					GND	"	"		"		"			"
		39	"	"						"		"					15.0V	"	"		"		"			"
		40	"	"						"		"					GND	"	"		"		"			"
		41	"	"						"		"					15.0V	"	"		"		"			"
		42	"	"						"		"					GND	"	"		"		"			"
		43	"	"						"		"					15.0V	"	"		"		"			"
		44	"	"						"		"					GND	"	"		"		"			"
		45	"	"						"		"					15.0V	"	"		"		"			"

See footnotes at end of device type 05.

TABLE III. Group A inspection for device type 05 – Continued.

Symbol	MIL-STD-883 method	Cases E,F,N,Z	Terminal conditions and limits 1/																Measured terminal	Test limits						Unit
			Recirc in	Clock	NC	NC	NC	Q	$\overline{Q}$	V_{SS}	Delayed clock	Mode cont.	NC	NC	NC	NC	Data in	V_{DD}		Subgroup 1 T_C = 25°C		Subgroup 2 T_C = 125°C		Subgroup 3 T_C = -55°C		
		Test no.	1	2	3	4	5	6	7	8	9	10	11	12	13	14	15	16		Min	Max	Min	Max	Min	Max	
I_{SS} 2/	3005	46	GND	3/						GND		GND					GND	15.0V	None		-2.0		-20			µA
		47	"	"						"		"					15.0V	"	"		"		"			"
		48	"	"						"		"					GND	"	"		"		"			"
		49	"	"						"		"					15.0V	"	"		"		"			"
		50	"	"						"		"					GND	"	"		"		"			"
		51	"	"						"		"					15.0V	"	"		"		"			"
		52	"	"						"		"					GND	"	"		"		"			"
		53	"	"						"		"					15.0V	"	"		"		"			"
		54	"	"						"		"					GND	"	"		"		"			"
		55	"	"						"		"					15.0V	"	"		"		"			"
		56	"	"						"		"					GND	"	"		"		"			"
		57	"	"						"		"					15.0V	"	"		"		"			"
		58	"	"						"		"					GND	"	"		"		"			"
		59	"	"						"		"					15.0V	"	"		"		"			"
		60	GND	3/						GND		GND					GND	15.0V	None		-2.0		-20			µA
		61	"	"						"		"					15.0V	"	"		"		"			"
		62	"	"						"		"					GND	"	"		"		"			"
		63	"	"						"		"					15.0V	"	"		"		"			"
		64	"	"						"		"					GND	"	"		"		"			"
		65	"	"						"		"					15.0V	"	"		"		"			"
		66	"	"						"		"					GND	"	"		"		"			"
		67	"	"						"		"					15.0V	"	"		"		"			"
		68	"	"						"		"					GND	"	"		"		"			"
		69	"	"						"		"					15.0V	"	"		"		"			"
		70	"	"						"		"					GND	"	"		"		"			"
		71	"	15.0V						"		"					15.0V	"	V_{SS}		"		"			"
		72	"	GND						"		"					GND	"	V_{SS}		"		"			"
		73	"	15.0V						"		"					15.0V	"	None		"		"			"
		74	15.0V	"						"		"					GND	"	V_{SS}		"		"			"
		75	15.0V	"						"		15.0V					GND	"	V_{SS}		"		"			"
		76	GND	"						"		15.0V					15.0V	"	V_{SS}		"		"			"
V_{OH1}	3006	77	V_{IL1} 4/	5/				I_{OH1} 6/		"		V_{IL1}					V_{IH1} 9/	5.0V	Q	4.5		4.5		4.5		V
		78	V_{IL1} 4/	5/					I_{OH2} 7/	"		V_{IL1}					V_{IL1}	5.0V	$\overline{Q}$	4.5		4.5		4.5		"
		79	V_{IL1} 4/	V_{IH1}						"	I_{OH3} 8/	V_{IL1}					V_{IH1}	5.0V	Delayed clock	4.5		4.5		4.5		"
V_{OH2}		80	V_{IL2} 10/	5/						"		V_{IL2}					V_{IH2} 11/	12.5V	Q	11.25		11.25		11.25		"
		81	V_{IL2} 10/	5/						"		V_{IL2}					V_{IL2}	12.5V	$\overline{Q}$	11.25		11.25		11.25		"
		82	V_{IL2} 10/	V_{IH2}						"		V_{IL2}					V_{IH2}	12.5V	Delayed clock	11.25		11.25		11.25		"
V_{OL1}	3007	83	V_{IL1}	5/				I_{OL1} 12/		"		V_{IL1}					V_{IL1}	5.0V	Q		0.5		0.5		0.5	"
		84	V_{IL1}	5/					I_{OL2} 13/	"		V_{IL1}					V_{IH1}	5.0V	$\overline{Q}$		0.5		0.5		0.5	"
		85	V_{IL1}	V_{IL1}						"	I_{OL3} 14/	V_{IL1}					V_{IL1}	5.0V	Delayed clock		0.5		0.5		0.5	"
V_{OL2}		86	V_{IL2}	5/						"		V_{IL2}					V_{IL2}	12.5V	Q		1.25		1.25		1.25	"
		87	V_{IL2}	5/						"		V_{IL2}					V_{IH2}	12.5V	$\overline{Q}$		1.25		1.25		1.25	"
		88	V_{IL2}	V_{IL2}						"		V_{IL2}					V_{IL2}	12.5V	Delayed clock		1.25		1.25		1.25	"

See footnotes at end of device type 05.

TABLE III. Group A inspection for device type 05 – Continued.

Symbol	MIL-STD-883 method	Cases E,F,N,Z	Terminal conditions and limits 1/																Measured terminal	Test limits						Unit
			Recirc. in	Clock	NC	NC	NC	Q	$\overline{Q}$	V_{SS}	Delayed clock	Mode cont.	NC	NC	NC	NC	Data in	V_{DD}		Subgroup 1 T_C = 25°C		Subgroup 2 T_C = 125°C		Subgroup 3 T_C = -55°C		
		Test no.	1	2	3	4	5	6	7	8	9	10	11	12	13	14	15	16		Min	Max	Min	Max	Min	Max	
I_{IH1} 15/	3010	89	15.0V	15.0V						GND		15.0V					15.0V	15.0V	All inputs together		4.0					nA
I_{IH2}		90	15.0V	GND						"		GND					GND	"	Recirc. in		1.0		45			"
		91	GND	15.0V						"		GND					GND	"	Clock		"		"			"
		92	"	GND						"		15.0V					GND	"	Mode control		"		"			"
		93	"	"						"		GND					15.0V	"	Data in		"		"			"
I_{IL1} 15/	3009	94	"	"						"		"					GND	"	All inputs together		-4.0					"
I_{IL2}		95	"	"						"		"					"	"	Recirc. in		-1.0		-45			"
		96	"	"						"		"					"	"	Clock		"		"			"
		97	"	"						"		"					"	"	Mode control		"		"			"
		98	"	"						"		"					"	"	Data in		"		"			"
																				Subgroup 4 T_C = 25°C						
																				Min	Max					
C_i	3012	99	16/							GND								GND	Recirc in		12					pF
		100		16/						"								"	Clock		70					"
		101								"		16/						"	Mode control		12					"
		102								"							16/	"	Data in		12					"
																				Subgroup 7 T_C = 25°C		Subgroup 8 T_C = 125°C		Subgroup 8 T_C = -55°C		
																				Min	Max	Min	Max	Min	Max	
Truth table test 17/	3014	103	GND	5.0V						GND		GND					5.0V	5.0V	None	See 18/, 19/, 20/						
		104	GND	GND						"		"					5.0V	"	"							
		105	GND	5.0V						"		"					5.0V	"	"							
		106	5.0V	GND						"		"					GND	"	"							
		107	5.0V	5.0V						"		"					GND	"	"							
		108	GND	GND						"		"					5.0V	"	"							
		109	"	5.0V						"		"					"	"	"							
		110	"	GND						"		5.0V					"	"	"							
		111	"	5.0V						"		"					"	"	"							
		112	5.0V	GND						"		"					GND	"	"							
		113	"	5.0V						"		"					GND	"	"							
		114	"	21/						"		GND					5.0V	"	"							
		115	"	5.0V				H	L	"	H	"					"	"	All outputs							
		116	"	GND				H	L	"	L	"					"	"								
		117	"	5.0V				L	H	"	H	"					"	"	"							
		118	"	GND				L	H	"	L	"					"	"	"							
		119	"	5.0V				H	L	"	H	"					"	"	"							
		120	"	GND				H	L	"	L	"					"	"	"							
		121	"	5.0V				L	H	"	H	"					"	"	"							
		122	"	GND				L	H	"	L	"					"	"	"							
		123	"	5.0V				H	L	"	H	"					"	"	"							

See footnotes at end of device type 05.

TABLE III. Group A inspection for device type 05 – Continued.

Symbol	MIL-STD-883 method	Cases E,F,N,Z	Terminal conditions and limits 1/																Measured terminal	Test limits						Unit
			Recirc. in	Clock	NC	NC	NC	Q	$\overline{Q}$	V_{SS}	Delayed clock	Mode cont.	NC	NC	NC	NC	Data in	V_{DD}		Subgroup 9 T_C = 25°C		Subgroup 10 T_C = 125°C		Subgroup 11 T_C = -55°C		
		Test no.	1	2	3	4	5	6	7	8	9	10	11	12	13	14	15	16		Min	Max	Min	Max	Min	Max	
t_{PHL1}	3003 Fig. 4	124	GND	IN				OUT		GND		GND					IN	5.0V	Clock to Q	13	1060	18	1590	13	1060	ns
t_{PHL2}		125	GND	"					OUT	"		GND					IN	"	Clock to $\overline{Q}$	"	1320	"	1980	"	1320	"
t_{PHL3}		126	GND	"						"	OUT	GND						"	Clock to delayed clock	"	650	"	975	"	650	"
t_{PHL4}		127	IN	"				OUT		"		5.0V						"	Clock to Q	"	1060	"	1590	"	1060	"
t_{PLH1}		128	GND	"				OUT		"		GND					IN	"	Clock to Q	"	1060	"	1590	"	1060	"
t_{PLH2}		129	GND	"					OUT	"		GND					IN	"	Clock to $\overline{Q}$	"	1320	"	1980	"	1320	"
t_{PLH3}		130	GND	"						"	OUT	GND						"	Clock to delayed clock	"	650	"	975	"	650	"
t_{PLH4}		131	IN	"				OUT		"		5.0V						"	Clock to Q	"	1060	"	1590	"	1060	"
t_{THL1}	3004 Fig. 4	132	GND	"				OUT		"		GND					IN	"	Q	10	290	14	435	10	290	"
t_{THL2}		133	GND	"					OUT	"		GND					IN	"	$\overline{Q}$	"	1400	"	2100	"	1400	"
t_{THL3}		134	GND	"						"	OUT	GND						"	Delayed clock	"	350	"	525	"	350	"
t_{TLH1}	3004 Fig. 4	135	GND	IN				OUT		"		GND					IN	5.0V	Q	10	340	14	510	10	340	ns
t_{TLH2}		136	GND	"					OUT	"		"					IN	"	$\overline{Q}$	"	1400	"	2100	"	1400	"
t_{TLH3}		137	GND	"						"	OUT	"						"	Delayed clock	"	350	"	525	"	350	"
f_{CL} (max) 22/		138		"						"	OUT	"						"	Clock		1.25		1.81		1.25	µs
		139		"				OUT		"		"					IN	"	"		"		"		"	"
		140		"					OUT	"		"					IN	"	"		"		"		"	"
		141	IN	"				OUT		"		5.0V						"	"		"		"		"	"
		142	IN	"					OUT	"		5.0V						"	"		"		"		"	"

See footnotes on next page.

TABLE III. Group A inspection for device type 05 – Continued.

1/ Terminals not designated may be "HIGH" level logic, "LOW" level logic, or open except as follows:
$V_{IC(POS)}$ tests; the V_{SS} terminal shall be open.
$V_{IC(NEG)}$ tests; the V_{DD} terminal shall be open.
I_{SS} tests; the output terminals shall be open.

2/ Test numbers 9 through 76 shall be run in sequence. See 4.5.3.

3/ Apply single clock pulse; V_{IN} = 0 V dc to V_{DD}.

4/ V_{IL1} = 1.1 V at 25°C, 0.85 V at 125°C, 1.35 V at -55°C.

5/ Apply clock pulse; V_{IN} = 0 V to V_{DD} until proper output state is achieved.

6/ I_{OH1} = -320 μA at 25°C, -225 μA at 125°C, -400 μA at -55°C.

7/ I_{OH2} = -90 μA at 25°C, -60 μA at 125°C, -110μA at -55°C.

8/ I_{OH3} = -400 μA at 25°C, -280 μA at 125°C, -480μA at -55°C.

9/ V_{IH1} = 3.8 V at 25°C, 3.6 V at 125°C, 3.95 V at -55°C.

10/ V_{IL2} = 2.8 V at 25°C, 2.55 V at 125°C, 3.05 V at -55°C.

11/ V_{IH2} = 9.5 V at 25°C, 9.25 V at 125°C, 9.75 V at -55°C.

12/ I_{OL1} = 1.3 mA at 25°C, 0.5 mA at 125°C, 1.5 mA at -55°C.

13/ I_{OL2} = 90 μA at 25°C, 60 μA at 125°C, 110 μA at -55°C.

14/ I_{OL3} = 400 μA at 25°C, 280 μA at 125°C, 480 μA at -55°C.

15/ The device manufacturer may, at his option, measure I_{IL} and I_{IH} at 25°C for each individual input or measure all inputs together.

16/ See 4.4.1c.

17/ Test numbers 103 through 123 shall be run in sequence.

18/ The output voltage limits for each temperature are "H" = V_{DD} –0.5 V min. and "L" = V_{SS} +0.5 V max.

19/ For all test conditions, delayed clock (CL_D) is clock delayed by two inverters.

20/ The functional tests shall be performed at V_{IH} and $V_{DD} \leq 5.0$ V and ≥ 15 V.

21/ Apply 59 clock pulses; V_{IN} = 0 V dc to V_{DD}.

22/ The maximum clock frequency (f_{CL}) requirement is considered met if proper output state changes occur with the pulse repetition period set to that given in the limits column.

TABLE III. Group A inspection for device type 06.

Symbol	MIL-STD-883 method	Cases J,K,U	Terminal conditions and limits 1/																								Measured terminal	Test limits						Unit
		Symbol	B8	B7	B6	B5	B4	B3	B2	B1	AE	Serial In	A/B	V_{SS}	P/S	A/S	Clock	A1	A2	A3	A4	A5	A6	A7	A8	V_{DD}		Subgroup 1 T_C = 25°C		Subgroup 2 T_C = 125°C		Subgroup 3 T_C = -55°C		
		Test no.	1	2	3	4	5	6	7	8	9	10	11	12	13	14	15	16	17	18	19	20	21	22	23	24		Min	Max	Min	Max	Min	Max	
V_{IC} (POS)	2/	1									1mA															GND	AE		1.5					V
		2										1mA														"	Ser in		"					"
		3											1mA													"	A/B		"					"
		4													1mA											"	P/S		"					"
		5														1mA										"	A/S		"					"
		6															1mA									"	Clock		"					"
V_{IC} (NEG)		7									-1mA			GND													AE		-6					"
		8										-1mA		"													Ser in		"					"
		9											-1mA	"													A/B		"					"
		10												"	-1mA												P/S		"					"
		11												"		-1mA											A/S		"					"
		12												"			-1mA										Clock		"					"
I_{SS} 3/	3005	13									15.0V	15.0V	15.0V	"	15.0V	15.0V	GND	GND	15.0V	GND	15.0V	GND	15.0V	GND	15.0V	15.0V	V_{SS}		-1.0		-5.0			µA
		14									"	GND	"	"	15.0V	15.0V	15.0V	15.0V	GND	15.0V	GND	15.0V	GND	15.0V	GND	"	V_{SS}		"		"			"
		15									"	"	"	"	15.0V	GND	15.0V	15.0V	GND	15.0V	GND	15.0V	GND	15.0V	GND	"	None		"		"			"
		16									"	"	"	"	GND	GND	15.0V	15.0V	GND	15.0V	GND	15.0V	GND	15.0V	GND	"	V_{SS}		"		"			"
		17									"	"	"	"	GND	15.0V	GND	GND	15.0V	GND	15.0V	GND	15.0V	GND	15.0V	"	V_{SS}		"		"			"
		18									GND	"	"	"	GND	GND	"	"	"	"	"	"	"	"	"	"	None		"		"			"
		19									"	"	"	"	15.0V	"	"	"	"	"	"	"	"	"	"	"	V_{SS}		"		"			"
		20									"	"	GND	"	GND	"	"	"	"	"	"	"	"	"	"	"	V_{SS}		"		"			"
		21									"	"	"	"	GND	"										"	None		"		"			"
		22	15.0V	GND	15.0V	GND	15.0V	GND	15.0V	GND	15.0V	"	"	"	GND	"										"	V_{SS}		"		"			"
		23	15.0V	GND	15.0V	GND	15.0V	GND	15.0V	GND	15.0V	"	"	"	15.0V	"										"	V_{SS}		"		"			"
V_{OH1}	3006	24								4/	5.0V		5.0V	"	5.0V	"	5/	6/								5.0V	B1	4.5		4.5		4.5		V
		25							4/		"		"	"	"	"	"		6/							"	B2	"		"		"		"
		26						4/			"		"	"	"	"	"			6/						"	B3	"		"		"		"
		27					4/				"		"	"	"	"	"				6/					"	B4	"		"		"		"
		28				4/					"		"	"	"	"	"					6/				"	B5	"		"		"		"
		29			4/						"		"	"	"	"	"						6/			"	B6	"		"		"		"
		30		4/							"		"	"	"	"	"							6/		"	B7	"		"		"		"
		31	4/								"		"	"	"	"	"								6/	"	B8	"		"		"		"
		32								6/	"		GND	"	"	"	"	4/								"	A1	"		"		"		"
		33							6/		"		"	"	"	"	"		4/							"	A2	"		"		"		"
		34						6/			"		"	"	"	"	"			4/						"	A3	"		"		"		"
		35					6/				"		"	"	"	"	"				4/					"	A4	"		"		"		"
		36				6/					"		"	"	"	"	"					4/				"	A5	"		"		"		"
		37			6/						"		"	"	"	"	"						4/			"	A6	"		"		"		"
		38		6/							"		"	"	"	"	"							4/		"	A7	"		"		"		"
		39	6/								"		"	"	"	"	"								4/	"	A8	"		"		"		"
		40									"	6/	"	"	GND	"	"	4/								"	A1	"		"		"		"
V_{OH2}		41									12.5V		12.5V	"	12.5V	"	"	7/								12.5V	B1	11.25		11.25		11.25		"
		42									"		"	"	"	"	"		7/							"	B2	"		"		"		"
		43									"		"	"	"	"	"			7/						"	B3	"		"		"		"
		44									"		"	"	"	"	"				7/					"	B4	"		"		"		"
		45									"		"	"	"	"	"					7/				"	B5	"		"		"		"
		46									"		"	"	"	"	"						7/			"	B6	"		"		"		"
		47									"		"	"	"	"	"							7/		"	B7	"		"		"		"
		48									"		"	"	"	"	"								7/	"	B8	"		"		"		"
		49								7/	"		GND	"	"	"	"									"	A1	"		"		"		"
		50							7/		"		"	"	"	"	"									"	A2	"		"		"		"
		51						7/			"		"	"	"	"	"									"	A3	"		"		"		"
		52					7/				"		"	"	"	"	"									"	A4	"		"		"		"
		53				7/					"		"	"	"	"	"									"	A5	"		"		"		"
		54			7/						"		"	"	"	"	"									"	A6	"		"		"		"
		55		7/							"		"	"	"	"	"									"	A7	"		"		"		"
		56	7/								"		"	"	"	"	"									"	A8	"		"		"		"
		57									"	7/	"	"	"	"	"									"	A1	"		"		"		"

See footnotes at end of device type 06.

TABLE III. Group A inspection for device type 06 – Continued.

Symbol	MIL-STD-883 method	Cases J,K,U Symbol	Terminal conditions and limits 1/ B8	B7	B6	B5	B4	B3	B2	B1	AE	Serial In	A/B	V_{SS}	P/S	A/S	Clock	A1	A2	A3	A4	A5	A6	A7	A8	V_{DD}	Measured terminal	Test limits Subgroup 1 T_C = 25°C Min	Subgroup 1 Max	Subgroup 2 T_C = 125°C Min	Subgroup 2 Max	Subgroup 3 T_C = -55°C Min	Subgroup 3 Max	Unit
		Test no.	1	2	3	4	5	6	7	8	9	10	11	12	13	14	15	16	17	18	19	20	21	22	23	24								
V_{OL1}	3007	58								8/	5.0V		5.0V	GND	5.0V	GND	5/	9/								5.0V	B1		0.5		0.5		0.5	V
		59							8/		"		"	"	"	"	"		9/							"	B2		"		"		"	"
		60						8/			"		"	"	"	"	"			9/						"	B3		"		"		"	"
		61					8/				"		"	"	"	"	"				9/					"	B4		"		"		"	"
		62				8/					"		"	"	"	"	"					9/				"	B5		"		"		"	"
		63			8/						"		"	"	"	"	"						9/			"	B6		"		"		"	"
		64		8/							"		"	"	"	"	"							9/		"	B7		"		"		"	"
		65	8/								"		"	"	"	"	"								9/	"	B8		"		"		"	"
		66								9/	"		GND	"	"	"	"	8/								"	A1		"		"		"	"
		67							9/		"		"	"	"	"	"		8/							"	A2		"		"		"	"
		68						9/			"		"	"	"	"	"			8/						"	A3		"		"		"	"
		69					9/				"		"	"	"	"	"				8/					"	A4		"		"		"	"
		70				9/					"		"	"	"	"	"					8/				"	A5		"		"		"	"
		71			9/						"		"	"	"	"	"						8/			"	A6		"		"		"	"
		72		9/							"		"	"	GND	"	"							8/		"	A7		"		"		"	"
		73	9/								"		"	"	GND	"	"								8/	"	A8		"		"		"	"
		74									"	9/	"	"	GND	"	"	8/								"	A1		"		"		"	"
V_{OL2}		75									12.5V		12.5V	"	12.5V	"	"	10/								12.5V	B1		1.25		1.25		1.25	"
		76									"		"	"	"	"	"		10/							"	B2		"		"		"	"
		77									"		"	"	"	"	"			10/						"	B3		"		"		"	"
		78									"		"	"	"	"	"				10/					"	B4		"		"		"	"
		79									"		"	"	"	"	"					10/				"	B5		"		"		"	"
		80									"		"	"	"	"	"						10/			"	B6		"		"		"	"
		81									"		"	"	"	"	"							10/		"	B7		"		"		"	"
		82									"		"	"	"	"	"								10/	"	B8		"		"		"	"
		83								10/	"		GND	"	"	"	"									"	A1		"		"		"	"
		84							10/		"		"	"	"	"	"									"	A2		"		"		"	"
		85						10/			"		"	"	"	"	"									"	A3		"		"		"	"
		86					10/				"		"	"	"	"	"									"	A4		"		"		"	"
		87				10/					"		"	"	"	"	"									"	A5		"		"		"	"
		88			10/						"		"	"	"	"	"									"	A6		"		"		"	"
		89		10/							"		"	"	"	"	"									"	A7		"		"		"	"
		90	10/								"		"	"	"	"	"									"	A8		"		"		"	"
		91									"	10/	"	"	GND	"	"									"	A1		"		"		"	"
I_{IH1} 11/	3010	92									15.0V	15.0V	15.0V	"	15.0V	15.0V	15.0V	15.0V	15.0V	15.0V	15.0V	15.0V	15.0V	15.0V	15.0V	15.0V	All HIGH level inputs together		14					nA
		92A	15.0V	15.0V	15.0V	15.0V	15.0V	15.0V	15.0V	15.0V	GND	15.0V	GND	"	15.0V	15.0V	15.0V									"			12					"
I_{IH2}		93	15.0V	GND	GND	GND	GND	GND	GND	GND	GND	GND	GND	"	GND	GND	GND	GND	GND	GND	GND	GND	GND	GND	GND	"	B8		1.0		45			"
		94	GND	15.0V	GND	GND	"	"	"	"	"	"	"	"	"	"	"	"	"	"	"	"	"	"	"	"	B7		"		"			"
		95	"	GND	15.0V	GND	"	"	"	"	"	"	"	"	"	"	"	"	"	"	"	"	"	"	"	"	B6		"		"			"
		96	"	"	GND	15.0V	"	"	"	"	"	"	"	"	"	"	"	"	"	"	"	"	"	"	"	"	B5		"		"			"
		97	"	"	"	GND	15.0V	"	"	"	"	"	"	"	"	"	"	"	"	"	"	"	"	"	"	"	B4		"		"			"
		98	"	"	"	"	GND	15.0V	"	"	"	"	"	"	"	"	"	"	"	"	"	"	"	"	"	"	B3		"		"			"
		99	"	"	"	"	"	GND	15.0V	"	"	"	"	"	"	"	"	"	"	"	"	"	"	"	"	"	B2		"		"			"
		100	"	"	"	"	"	"	GND	15.0V	"	"	"	"	"	"	"	"	"	"	"	"	"	"	"	"	B1		"		"			"
		101	"	"	"	"	"	"	"	GND	15.0V	"	"	"	"	"	"	"	"	"	"	"	"	"	"	"	AE		"		"			"
		102	"	"	"	"	"	"	"	"	GND	15.0V	"	"	"	"	"	"	"	"	"	"	"	"	"	"	Ser. IN		"		"			"
		103	"	"	"	"	"	"	"	"	"	GND	15.0V	"	"	"	"	"	"	"	"	"	"	"	"	"	A/B		"		"			"
		104	"	"	"	"	"	"	"	"	"	"	GND	"	15.0V	"	"	"	"	"	"	"	"	"	"	"	P/S		"		"			"
		105	"	"	"	"	"	"	"	"	"	"	"	"	GND	15.0V	"	"	"	"	"	"	"	"	"	"	A/S		"		"			"
		106	"	"	"	"	"	"	"	"	"	"	"	"	"	GND	15.0V	"	"	"	"	"	"	"	"	"	Clock		"		"			"
		107	"	"	"	"	"	"	"	"	"	"	"	"	"	"	GND	15.0V	"	"	"	"	"	"	"	"	A1		"		"			"
		108	"	"	"	"	"	"	"	"	"	"	"	"	"	"	"	GND	15.0V	"	"	"	"	"	"	"	A2		"		"			"
		109	"	"	"	"	"	"	"	"	"	"	"	"	"	"	"	"	GND	15.0V	"	"	"	"	"	"	A3		"		"			"
		110	"	"	"	"	"	"	"	"	"	"	"	"	"	"	"	"	"	GND	15.0V	"	"	"	"	"	A4		"		"			"
		111	"	"	"	"	"	"	"	"	"	"	"	"	"	"	"	"	"	"	GND	15.0V	"	"	"	"	A5		"		"			"
		112	"	"	"	"	"	"	"	"	"	"	"	"	"	"	"	"	"	"	"	GND	15.0V	"	"	"	A6		"		"			"
		113	"	"	"	"	"	"	"	"	"	"	"	"	"	"	"	"	"	"	"	GND	GND	15.0V	"	"	A7		"		"			"
		114	"	"	"	"	"	"	"	"	"	"	"	"	"	"	"	"	"	"	"	GND	GND	GND	15.0V	"	A8		"		"			"

See footnotes at end of device type 06.

TABLE III. Group A inspection for device type 06 – Continued.

Symbol	MIL-STD-883 method	Cases J,K,U Symbol	Terminal conditions and limits 1/																								Measured terminal	Test limits						Unit
			B8	B7	B6	B5	B4	B3	B2	B1	AE	Serial In	A/B	V_{SS}	P/S	A/S	Clock	A1	A2	A3	A4	A5	A6	A7	A8	V_{DD}		Subgroup 1 T_C = 25°C		Subgroup 2 T_C = 125°C		Subgroup 3 T_C = -55°C		
		Test no.	1	2	3	4	5	6	7	8	9	10	11	12	13	14	15	16	17	18	19	20	21	22	23	24		Min	Max	Min	Max	Min	Max	
I_{IL1} 11/	3009	115	GND	GND	GND	GND	GND	GND	GND	GND	GND	GND	GND	GND	GND	GND	GND	GND	GND	GND	GND	GND	GND	GND	GND	15.0V	All inputs together		-22					nA
I_{IL2}		116	"	"	"	"	"	"	"	"	"	"	"	"	"	"	"	"	"	"	"	"	"	"	"	"	B8		-1.0		-45			"
		117	"	"	"	"	"	"	"	"	"	"	"	"	"	"	"	"	"	"	"	"	"	"	"	"	B7		"		"			"
		118	"	"	"	"	"	"	"	"	"	"	"	"	"	"	"	"	"	"	"	"	"	"	"	"	B6		"		"			"
		119	"	"	"	"	"	"	"	"	"	"	"	"	"	"	"	"	"	"	"	"	"	"	"	"	B5		"		"			"
		120	"	"	"	"	"	"	"	"	"	"	"	"	"	"	"	"	"	"	"	"	"	"	"	"	B4		"		"			"
		121	"	"	"	"	"	"	"	"	"	"	"	"	"	"	"	"	"	"	"	"	"	"	"	"	B3		"		"			"
		122	"	"	"	"	"	"	"	"	"	"	"	"	"	"	"	"	"	"	"	"	"	"	"	"	B2		"		"			"
		123	"	"	"	"	"	"	"	"	"	"	"	"	"	"	"	"	"	"	"	"	"	"	"	"	B1		"		"			"
		124	"	"	"	"	"	"	"	"	"	"	"	"	"	"	"	"	"	"	"	"	"	"	"	"	AE		"		"			"
		125	"	"	"	"	"	"	"	"	"	"	"	"	"	"	"	"	"	"	"	"	"	"	"	"	Ser IN		"		"			"
		126	"	"	"	"	"	"	"	"	"	"	"	"	"	"	"	"	"	"	"	"	"	"	"	"	A/B		"		"			"
		127	"	"	"	"	"	"	"	"	"	"	"	"	"	"	"	"	"	"	"	"	"	"	"	"	P/S		"		"			"
		128	"	"	"	"	"	"	"	"	"	"	"	"	"	"	"	"	"	"	"	"	"	"	"	"	A/S		"		"			"
		129	"	"	"	"	"	"	"	"	"	"	"	"	"	"	"	"	"	"	"	"	"	"	"	"	Clock		"		"			"
		130	"	"	"	"	"	"	"	"	"	"	"	"	"	"	"	"	"	"	"	"	"	"	"	"	A1		"		"			"
		131	"	"	"	"	"	"	"	"	"	"	"	"	"	"	"	"	"	"	"	"	"	"	"	"	A2		"		"			"
		132	"	"	"	"	"	"	"	"	"	"	"	"	"	"	"	"	"	"	"	"	"	"	"	"	A3		"		"			"
		133	"	"	"	"	"	"	"	"	"	"	"	"	"	"	"	"	"	"	"	"	"	"	"	"	A4		"		"			"
		134	"	"	"	"	"	"	"	"	"	"	"	"	"	"	"	"	"	"	"	"	"	"	"	"	A5		"		"			"
		135	"	"	"	"	"	"	"	"	"	"	"	"	"	"	"	"	"	"	"	"	"	"	"	"	A6		"		"			"
		136	"	"	"	"	"	"	"	"	"	"	"	"	"	"	"	"	"	"	"	"	"	"	"	"	A7		"		"			"
		137	"	"	"	"	"	"	"	"	"	"	"	"	"	"	"	"	"	"	"	"	"	"	"	"	A8		"		"			"
																												Subgroup 4 T_C = 25°C						
																												Min	Max					
C_i	3012	138									12/			GND												GND	AE		12					pF
		139										12/		"												"	Serial In		"					"
		140											12/	"												"	A/B		"					"
		141												"	12/											"	P/S		"					"
		142												"		12/										"	A/S		"					"
		143												"			12/									"	Clock		"					"
																												Subgroup 7 T_C = 25°C		Subgroup 8 T_C = 125°C		Subgroup 8 T_C = -55°C		
																												Min	Max	Min	Max	Min	Max	
Truth table test 13/	3014	144									5.0V	GND	5.0V	GND	5.0V	GND	GND	5.0V	GND	5.0V	GND	5.0V	GND	5.0V	GND	5.0V	All outputs	See 14/, 15/						
		145	L	H	L	H	L	H	L	H	5.0V	"	"	"	5.0V	"	5.0V	"	"	"	"	"	"	"	"	"	"							
		146	"	"	"	"	"	"	"	"	GND	"	"	"	GND	"	5.0V	"	"	"	"	"	"	"	"	"	"	"							
		147	"	"	"	"	"	"	"	"	5.0V	"	"	"	"	"	5.0V	"	"	"	"	"	"	"	"	"	"	"							
		148	"	"	"	"	"	"	"	"	"	"	"	"	"	"	GND	"	"	"	"	"	"	"	"	"	"	"							
		149	H	L	H	L	H	L	H	L	"	"	"	"	"	"	5.0V	"	"	"	"	"	"	"	"	"	"	"							
		150	"	"	"	"	"	"	"	"	"	"	"	"	5.0V	"	5.0V	"	"	"	"	"	"	"	"	"	"	"							
		151	"	"	"	"	"	"	"	"	"	5.0V	"	"	GND	"	5.0V	GND	5.0V	GND	5.0V	GND	5.0V	GND	5.0V	"	"	"							
		152	"	"	"	"	"	"	"	"	"	"	"	"	GND	"	GND	"	"	"	"	"	"	"	"	"	"	"							
		153	L	H	L	H	L	H	L	H	"	"	"	"	GND	"	"	"	"	"	"	"	"	"	"	"	"	"							
		154	H	L	H	L	H	L	H	L	"	"	"	"	5.0V	5.0V	"	"	"	"	"	"	"	"	"	"	"	"							
		155	L	H	L	H	L	H	L	H	"	GND	"	"	"	"	"	5.0V	GND	5.0V	GND	5.0V	GND	5.0V	GND	"	"							
		156	L	H	L	H	L	H	L	H	GND	"	"	"	"	"	"	5.0V	GND	5.0V	GND	5.0V	GND	5.0V	GND	"	"							
		157	L	H	L	H	L	H	L	H	GND	"	"	"	"	"	5.0V	GND	5.0V	GND	5.0V	GND	5.0V	GND	5.0V	"	"							
		158									GND	"	GND	"	GND	"	GND									"	"							
		159	GND	5.0V	GND	5.0V	GND	5.0V	GND	5.0V	5.0V	"	"	"	5.0V	"	"	H	L	H	L	H	L	H	L	"	"							
		160	5.0V	GND	5.0V	GND	5.0V	GND	5.0V	GND	"	5.0V	"	"	"	"	"	L	H	L	H	L	H	L	H	"	"							
		161	5.0V	GND	5.0V	GND	5.0V	GND	5.0V	GND	"	"	"	"	"	GND	"	"	"	"	"	"	"	"	"	"	"							
		162	GND	5.0V	GND	5.0V	GND	5.0V	GND	5.0V	"	"	"	"	"	GND	"	"	"	"	"	"	"	"	"	"	"							
		163	GND	5.0V	GND	5.0V	GND	5.0V	GND	5.0V	"	"	"	"	GND	GND	"	"	"	"	"	"	"	"	"	"	"							

See footnotes at end of device type 06.

TABLE III. Group A inspection for device type 06 – Continued.

Symbol	MIL-STD-883 method	Cases J,K,U Symbol	Terminal conditions and limits 1/ B8	B7	B6	B5	B4	B3	B2	B1	AE	Serial In	A/B	V_{SS}	P/S	A/S	Clock	A1	A2	A3	A4	A5	A6	A7	A8	V_{DD}	Measured terminal	Test limits Subgroup 7 T_C = 25°C Min	Subgroup 7 T_C = 25°C Max	Subgroup 8 T_C = 125°C Min	Subgroup 8 T_C = 125°C Max	Subgroup 8 T_C = -55°C Min	Subgroup 8 T_C = -55°C Max	Unit
		Test no.	1	2	3	4	5	6	7	8	9	10	11	12	13	14	15	16	17	18	19	20	21	22	23	24								
Truth table test 13/	3014	164	GND	5.0V	GND	5.0V	GND	5.0V	GND	5.0V	5.0V	5.0V	GND	GND	GND	5.0V	GND	L	H	L	H	L	H	L	H	5.0V	All outputs	See 14/, 15/						
		165	GND	5.0V	GND	5.0V	GND	5.0V	GND	5.0V	"	"	"	"	5.0V	GND	"	H	L	H	L	H	L	H	L	"	"								
		166	GND	5.0V	GND	5.0V	GND	5.0V	GND	5.0V	"	"	"	"	"	"	"	H	L	H	L	H	L	H	L	"	"								
		167	5.0V	GND	5.0V	GND	5.0V	GND	5.0V	GND	"	"	"	"	"	"	"	H	L	H	L	H	L	H	L	"	"								
		168	"	"	"	"	"	"	"	"	"	"	"	"	"	"	5.0V	L	H	L	H	L	H	L	H	"	"								
		169	"	"	"	"	"	"	"	"	"	"	"	"	GND	"	GND	L	H	L	H	L	H	L	H	"	"								
		170	"	"	"	"	"	"	"	"	"	"	"	"	GND	"	5.0V	H	L	H	L	H	L	H	L	"	"								
																												Subgroup 9 T_C = 25°C Min	Subgroup 9 T_C = 25°C Max	Subgroup 10 T_C = 125°C Min	Subgroup 10 T_C = 125°C Max	Subgroup 11 T_C = -55°C Min	Subgroup 11 T_C = -55°C Max	
t_{PHL1}	3003 Fig. 4	171								OUT	5.0V		5.0V	GND	5.0V	GND	IN	IN								5.0V	Clock to B1	13	1100	18	1300	13	1000	ns
		172							OUT		"		"	"	"	"	"		IN							"	Clock to B2	"	"	"	"	"	"	"
		173						OUT			"		"	"	"	"	"			IN						"	Clock to B3	"	"	"	"	"	"	"
		174					OUT				"		"	"	"	"	"				IN					"	Clock to B4	"	"	"	"	"	"	"
		175				OUT					"		"	"	"	"	"					IN				"	Clock to B5	"	"	"	"	"	"	"
		176			OUT						"		"	"	"	"	"						IN			"	Clock to B6	"	"	"	"	"	"	"
		177		OUT							"		"	"	"	"	"							IN		"	Clock to B7	"	"	"	"	"	"	"
		178	OUT								"		"	"	"	"	"								IN	"	Clock to B8	"	"	"	"	"	"	"
t_{PLH1}		179								OUT	"		"	"	"	"	"	IN								"	Clock to B1	"	1300	"	1500	"	1200	"
		180							OUT		"		"	"	"	"	"		IN							"	Clock to B2	"	"	"	"	"	"	"
		181						OUT			"		"	"	"	"	"			IN						"	Clock to B3	"	"	"	"	"	"	"
		182					OUT				"		"	"	"	"	"				IN					"	Clock to B4	"	"	"	"	"	"	"
		183				OUT					"		"	"	"	"	"					IN				"	Clock to B5	"	"	"	"	"	"	"
		184			OUT						"		"	"	"	"	"						IN			"	Clock to B6	"	"	"	"	"	"	"
		185		OUT							"		"	"	"	"	"							IN		"	Clock to B7	"	"	"	"	"	"	"
		186	OUT								"		"	"	"	"	"								IN	"	Clock to B8	"	"	"	"	"	"	"
t_{PHL2}		187								IN	"		GND	"	"	"	"	OUT								"	Clock to A1	"	1100	"	1300	"	1000	"
		188							IN		"		"	"	"	"	"		OUT							"	Clock to A2	"	"	"	"	"	"	"
		189						IN			"		"	"	"	"	"			OUT						"	Clock to A3	"	"	"	"	"	"	"
		190					IN				"		"	"	"	"	"				OUT					"	Clock to A4	"	"	"	"	"	"	"
		191				IN					"		"	"	"	"	"					OUT				"	Clock to A5	"	"	"	"	"	"	"
		192			IN						"		"	"	"	"	"						OUT			"	Clock to A6	"	"	"	"	"	"	"
		193		IN							"		"	"	"	"	"							OUT		"	Clock to A7	"	"	"	"	"	"	"
		194	IN								"		"	"	"	"	"								OUT	"	Clock to A8	"	"	"	"	"	"	"

See footnotes at end of device type 06.

TABLE III. Group A inspection for device type 06 – Continued.

Symbol	MIL-STD-883 method	Cases J,K,U	Terminal conditions and limits 1/																								Measured terminal	Test limits						Unit
		Symbol	B8	B7	B6	B5	B4	B3	B2	B1	AE	Serial In	A/B	V_{SS}	P/S	A/S	Clock	A1	A2	A3	A4	A5	A6	A7	A8	V_{DD}		Subgroup 9 T_C = 25°C		Subgroup 10 T_C = 125°C		Subgroup 11 T_C = -55°C		
		Test no.	1	2	3	4	5	6	7	8	9	10	11	12	13	14	15	16	17	18	19	20	21	22	23	24		Min	Max	Min	Max	Min	Max	
t_{PLH2}	3003 Fig. 4	195								IN	5.0V		GND	GND	5.0V	GND	IN	OUT								5.0V	Clock to A1	13	1300	18	1500	13	1200	ns
		196							IN		"		"	"	"	"	"		OUT							"	Clock to A2	"	"	"	"	"	"	"
		197						IN			"		"	"	"	"	"			OUT						"	Clock to A3	"	"	"	"	"	"	"
		198					IN				"		"	"	"	"	"				OUT					"	Clock to A4	"	"	"	"	"	"	"
		199				IN					"		"	"	"	"	"					OUT				"	Clock to A5	"	"	"	"	"	"	"
		200			IN						"		"	"	"	"	"						OUT			"	Clock to A6	"	"	"	"	"	"	"
		201		IN							"		"	"	"	"	"							OUT		"	Clock to A7	"	"	"	"	"	"	"
		202	IN								"		"	"	"	"	"								OUT	"	Clock to A8	"	"	"	"	"	"	"
t_{PHL3}		203								OUT	"	IN	5.0V	"	GND	"	"									"	Clock to B1	"	1100	"	1300	"	1000	"
		204							OUT		"	"	"	"	"	"	"									"	Clock to B2	"	"	"	"	"	"	"
		205						OUT			"	"	"	"	"	"	"									"	Clock to B3	"	"	"	"	"	"	"
		206					OUT				"	"	"	"	"	"	"									"	Clock to B4	"	"	"	"	"	"	"
		207				OUT					"	"	"	"	"	"	"									"	Clock to B5	"	"	"	"	"	"	"
		208			OUT						"	"	"	"	"	"	"									"	Clock to B6	"	"	"	"	"	"	"
		209		OUT							"	"	"	"	"	"	"									"	Clock to B7	"	"	"	"	"	"	"
		210	OUT								"	"	"	"	"	"	"									"	Clock to B8	"	"	"	"	"	"	"
t_{PLH3}		211								OUT	"	"	"	"	"	"	"									"	Clock to B1	"	1300	"	1500	"	1200	"
		212						OUT	OUT		"	"	"	"	"	"	"									"	Clock to B2	"	"	"	"	"	"	"
		213						OUT			"	"	"	"	"	"	"									"	Clock to B3	"	"	"	"	"	"	"
		214					OUT				"	"	"	"	"	"	"									"	Clock to B4	"	"	"	"	"	"	"
		215				OUT					"	"	"	"	"	"	"									"	Clock to B5	"	"	"	"	"	"	"
		216			OUT						"	"	"	"	"	"	"									"	Clock to B6	"	"	"	"	"	"	"
		217		OUT							"	"	"	"	"	"	"									"	Clock to B7	"	"	"	"	"	"	"
		218	OUT								"	"	"	"	"	"	"									"	Clock to B8	"	"	"	"	"	"	"
t_{PHL4}		219									"	"	GND	"	"	"	"	OUT								"	Clock to A1	"	1100	"	1300	"	1000	"
		220									"	"	"	"	"	"	"		OUT							"	Clock to A2	"	"	"	"	"	"	"
		221									"	"	"	"	"	"	"			OUT						"	Clock to A3	"	"	"	"	"	"	"
		222									"	"	"	"	"	"	"				OUT					"	Clock to A4	"	"	"	"	"	"	"
		223									"	"	"	"	"	"	"					OUT				"	Clock to A5	"	"	"	"	"	"	"
		224									"	"	"	"	"	"	"						OUT			"	Clock to A6	"	"	"	"	"	"	"
		225									"	"	"	"	"	"	"							OUT		"	Clock to A7	"	"	"	"	"	"	"
		226									"	"	"	"	"	"	"								OUT	"	Clock to A8	"	"	"	"	"	"	"

See footnotes at end of device type 06.

TABLE III. Group A inspection for device type 06 – Continued.

Symbol	MIL-STD-883 method	Cases J,K,U Symbol	Terminal conditions and limits 1/ B8	B7	B6	B5	B4	B3	B2	B1	AE	Serial In	A/B	V_{SS}	P/S	A/S	Clock	A1	A2	A3	A4	A5	A6	A7	A8	V_{DD}	Measured terminal	Test limits Subgroup 9 T_C = 25°C Min	Subgroup 9 T_C = 25°C Max	Subgroup 10 T_C = 125°C Min	Subgroup 10 T_C = 125°C Max	Subgroup 11 T_C = -55°C Min	Subgroup 11 T_C = -55°C Max	Unit
		Test no.	1	2	3	4	5	6	7	8	9	10	11	12	13	14	15	16	17	18	19	20	21	22	23	24								
t_{PLH4}	3003 Fig. 4	227									5.0V	IN	GND	GND	GND	GND	IN	OUT								5.0V	Clock to A1	13	1300	18	1500	13	1200	ns
		228									"	"	"	"	"	"	"		OUT							"	Clock to A2	"	"	"	"	"	"	"
		229									"	"	"	"	"	"	"			OUT						"	Clock to A3	"	"	"	"	"	"	"
		230									"	"	"	"	"	"	"				OUT					"	Clock to A4	"	"	"	"	"	"	"
		231									"	"	"	"	"	"	"					OUT				"	Clock to A5	"	"	"	"	"	"	"
		232									"	"	"	"	"	"	"						OUT			"	Clock to A6	"	"	"	"	"	"	"
		233									"	"	"	"	"	"	"							OUT		"	Clock to A7	"	"	"	"	"	"	"
		234									"	"	"	"	"	"	"								OUT	"	Clock to A8	"	"	"	"	"	"	"
t_{THL1}	3004 Fig. 4	235								OUT	"		5.0V	"	5.0V	"	"	IN								"	B1	10	1100	14	1300	10	1000	"
		236							OUT		"		"	"	"	"	"		IN							"	B2	"	"	"	"	"	"	"
		237						OUT			"		"	"	"	"	"			IN						"	B3	"	"	"	"	"	"	"
		238					OUT				"		"	"	"	"	"				IN					"	B4	"	"	"	"	"	"	"
		239				OUT					"		"	"	"	"	"					IN				"	B5	"	"	"	"	"	"	"
		240			OUT						"		"	"	"	"	"						IN			"	B6	"	"	"	"	"	"	"
		241		OUT							"		"	"	"	"	"							IN		"	B7	"	"	"	"	"	"	"
		242	OUT								"		"	"	"	"	"								IN	"	B8	"	"	"	"	"	"	"
t_{TLH1}		243								OUT	"		"	"	"	"	"	IN								"	B1	"	2000	"	2300	"	1800	"
		244							OUT		"		"	"	"	"	"		IN							"	B2	"	"	"	"	"	"	"
		245						OUT			"		"	"	"	"	"			IN						"	B3	"	"	"	"	"	"	"
		246					OUT				"		"	"	"	"	"				IN					"	B4	"	"	"	"	"	"	"
		247				OUT					"		"	"	"	"	"					IN				"	B5	"	"	"	"	"	"	"
		248			OUT						"		"	"	"	"	"						IN			"	B6	"	"	"	"	"	"	"
		249		OUT							"		"	"	"	"	"							IN		"	B7	"	"	"	"	"	"	"
		250	OUT								"		"	"	"	"	"								IN	"	B8	"	"	"	"	"	"	"
t_{THL2}		251								IN	"		GND	"	"	"	"	OUT								"	A1	"	1100	"	1300	"	1000	"
		252							IN		"		"	"	"	"	"		OUT							"	A2	"	"	"	"	"	"	"
		253						IN			"		"	"	"	"	"			OUT						"	A3	"	"	"	"	"	"	"
		254					IN				"		"	"	"	"	"				OUT					"	A4	"	"	"	"	"	"	"
		255				IN					"		"	"	"	"	"					OUT				"	A5	"	"	"	"	"	"	"
		256			IN						"		"	"	"	"	"						OUT			"	A6	"	"	"	"	"	"	"
		257		IN							"		"	"	"	"	"							OUT		"	A7	"	"	"	"	"	"	"
		258	IN								"		"	"	"	"	"								OUT	"	A8	"	"	"	"	"	"	"
t_{TLH2}		259								IN	"		"	"	"	"	"	OUT								"	A1	"	2000	"	2300	"	1800	"
		260							IN		"		"	"	"	"	"		OUT							"	A2	"	"	"	"	"	"	"
		261						IN			"		"	"	"	"	"			OUT						"	A3	"	"	"	"	"	"	"
		262					IN				"		"	"	"	"	"				OUT					"	A4	"	"	"	"	"	"	"
		263				IN					"		"	"	"	"	"					OUT				"	A5	"	"	"	"	"	"	"
		264			IN						"		"	"	"	"	"						OUT			"	A6	"	"	"	"	"	"	"
		265		IN							"		"	"	"	"	"							OUT		"	A7	"	"	"	"	"	"	"
		266	IN								"		"	"	"	"	"								OUT	"	A8	"	"	"	"	"	"	"

See footnotes at end of device type 06.

TABLE III. Group A inspection for device type 06 – Continued.

Symbol	MIL-STD-883 method	Cases J,K,U	Terminal conditions and limits 1/																								Measured terminal	Test limits						Unit
		Symbol	B8	B7	B6	B5	B4	B3	B2	B1	AE	Serial In	A/B	V_{SS}	P/S	A/S	Clock	A1	A2	A3	A4	A5	A6	A7	A8	V_{DD}		Subgroup 9 T_C = 25°C		Subgroup 10 T_C = 125°C		Subgroup 11 T_C = -55°C		
		Test no.	1	2	3	4	5	6	7	8	9	10	11	12	13	14	15	16	17	18	19	20	21	22	23	24		Min	Max	Min	Max	Min	Max	
f_{CL} (max) 16/		267									5.0V	IN	GND	GND	GND	GND	IN	OUT								5.0V	Clock		1.3		1.9		1.3	µs
		268									"	"	"	"	"	"	"		OUT							"	"		"		"		"	"
		269									"	"	"	"	"	"	"			OUT						"	"		"		"		"	"
		270									"	"	"	"	"	"	"				OUT					"	"		"		"		"	"
		271									"	"	"	"	"	"	"					OUT				"	"		"		"		"	"
		272									"	"	"	"	"	"	"						OUT			"	"		"		"		"	"
		273									"	"	"	"	"	"	"							OUT		"	"		"		"		"	"
		274									"	"	"	"	"	"	"								OUT	"	"		"		"		"	"
		275								OUT	"	"	5.0V	"	"	"	"									"	"		"		"		"	"
		276							OUT		"	"	"	"	"	"	"									"	"		"		"		"	"
		277						OUT			"	"	"	"	"	"	"									"	"		"		"		"	"
		278					OUT				"	"	"	"	"	"	"									"	"		"		"		"	"
		279				OUT					"	"	"	"	"	"	"									"	"		"		"		"	"
		280			OUT						"	"	"	"	"	"	"									"	"		"		"		"	"
		281		OUT							"	"	"	"	"	"	"									"	"		"		"		"	"
		282	OUT								"	"	"	"	"	"	"									"	"		"		"		"	"

1/ Terminals not designated may be "HIGH" level logic, "LOW" level logic, or open except as follows:
$V_{IC(POS)}$ tests; the V_{SS} terminal shall be open.
$V_{IC(NEG)}$ tests; the V_{DD} terminal shall be open.
I_{SS} tests; the output terminals shall be open.
I_{IH1} tests; the undesignated terminals shall be open.

2/ In device type 06, circuit C, all terminals except 12 and 24 are inputs connected to gate structures; therefore, the table III, $V_{IC(POS)}$ and $V_{IC(NEG)}$ tests shall be expanded to include testing terminals 1 through 8, and 16 through 23.

3/ Test numbers 13 through 23 shall be run in sequence. See 4.5.3.

4/ I_{OH} = -50 µA at 25°C, -35 µA at 125°C, -75 µA at -55°C.

5/ Apply clock pulse; V_{IN} = 0 V to V_{DD} until proper output state is achieved.

6/ V_{IH1} = 3.8 V at 25°C, 3.6 V at 125°C, 3.95 V at -55°C.

7/ V_{IH2} = 9.5 V at 25°C, 9.25 V at 125°C, 9.75 V at -55°C.

8/ I_{OL} = 100 µA at 25°C, 70 µA at 125°C, 124 µA at -55°C.

9/ V_{IL1} = 1.1 V at 25°C, 0.85 V at 125°C, 1.35 V at -55°C.

10/ V_{IL2} = 2.8 V at 25°C, 2.55 V at 125°C, 3.05 V at -55°C.

11/ The device manufacturer may, at his option, measure I_{IL} and I_{IH} at 25°C for each individual input or measure all inputs together.

12/ See 4.4.1c.

13/ Test numbers 144 through 170 shall be run in sequence.

14/ The output voltage limits for each temperature are "H" = V_{DD} –0.5 V min. and "L" = V_{SS} +0.5 V max.

15/ The functional tests shall be performed at V_{IH} and $V_{DD} \leq 5.0$ V and ≥ 15 V.

16/ The maximum clock frequency (f_{CL}) requirement is considered met if proper output state changes occur with the pulse repetition period set to that given in the limits column.

TABLE III. Group A inspection for device type 51.

Symbol	MIL-STD-883 method	Cases A C,D,T,X,Y Symbol	Terminal conditions and limits 1/														Measured terminal	Test limits						Unit
			D1	NC	Clock	D2	D3	D4	V_{SS}	D4+4	D4+5	D3+4	D2+4	D2+5	D1+4	V_{DD}		Subgroup 1 T_C = 25°C		Subgroup 2 T_C = 125°C		Subgroup 3 T_C = -55°C		
		Test no.	1	2	3	4	5	6	7	8	9	10	11	12	13	14		Min	Max	Min	Max	Min	Max	
V_{IC} (POS)		1	1mA													GND	D1		1.5					V
		2			1mA											"	Clock		"					"
		3				1mA										"	D2		"					"
		4					1mA									"	D3		"					"
		5						1mA								"	D4		"					"
V_{IC} (NEG)		6	-1mA						GND								D1		-6.0					"
		7			-1mA				"								Clock		"					"
		8				-1mA			"								D2		"					"
		9					-1mA		"								D3		"					"
		10						-1mA	"								D4		"					"
I_{SS} 2/	3005	11	GND		3/	GND	GND	GND	"							18.0V	None		-0.3		-3.0			µA
		12	18.0V		"	18.0V	18.0V	18.0V	"							"	"		"		"			"
		13	GND		"	GND	GND	GND	"							"	"		"		"			"
		14	18.0V		"	18.0V	18.0V	18.0V	"							"	"		"		"			"
		15	GND		"	GND	GND	GND	"							"	"		"		"			"
		16	18.0V		GND	18.0V	18.0V	18.0V	"							"	V_{SS}		"		"			"
		17	18.0V		18.0V	18.0V	18.0V	18.0V	"							"	V_{SS}		"		"			"
		18	18.0V		GND	18.0V	18.0V	18.0V	"							"	None		"		"			"
		19	GND		GND	GND	GND	GND	"							"	V_{SS}		"		"			"
V_{OH3}	3006	20	15.0V		4/	15.0V	15.0V	15.0V	"							15.0V	D4+4	14.95		14.95		14.95		V
		21	"		"	"	"	"	"							"	D4+5	"		"		"		"
		22	"		"	"	"	"	"							"	D3+4	"		"		"		"
		23	"		"	"	"	"	"							"	D2+4	"		"		"		"
		24	"		"	"	"	"	"							"	D2+5	"		"		"		"
		25	"		"	"	"	"	"							"	D1+4	"		"		"		"
V_{OL3}	3007	26	GND		"	GND	GND	GND	"							"	D4+4		0.05		0.05		0.05	"
		27	"		"	"	"	"	"							"	D4+5		"		"		"	"
		28	"		"	"	"	"	"							"	D3+4		"		"		"	"
		29	"		"	"	"	"	"							"	D2+4		"		"		"	"
		30	"		"	"	"	"	"							"	D2+5		"		"		"	"
		31	"		"	"	"	"	"							"	D1+4		"		"		"	"
V_{IH1} 11/		32	5/		5/	5/	5/	5/	"	5/	5/	5/	5/	5/	5/	5/	All outputs	5/	5/	5/	5/	5/	5/	5/
V_{IH2} 11/		33	"		"	"	"	"	"	"	"	"	"	"	"	"	"	"	"	"	"	"	"	"	"
V_{IH3} 11/		34	"		"	"	"	"	"	"	"	"	"	"	"	"	"	"	"	"	"	"	"	"	"
V_{IL1} 11/		35	"		"	"	"	"	"	"	"	"	"	"	"	"	"	"	"	"	"	"	"	"	"
V_{IL2} 11/		36	"		"	"	"	"	"	"	"	"	"	"	"	"	"	"	"	"	"	"	"	"	"
V_{IL3} 11/		37	"		"	"	"	"	"	"	"	"	"	"	"	"	"	"	"	"	"	"	"	"	"
I_{OL1}		38	GND		4/	GND	GND	GND	"	0.4V						5.0V	D4+4		0.51		0.36		0.64	mA
		39	"		"	"	"	"	"		0.4V					"	D4+5		"		"		"	"
		40	"		"	"	"	"	"			0.4V				"	D3+4		"		"		"	"
		41	"		"	"	"	"	"				0.4V			"	D2+4		"		"		"	"
		42	"		"	"	"	"	"					0.4V		"	D2+5		"		"		"	"
		43	"		"	"	"	"	"						0.4V	"	D1+4		"		"		"	"
I_{OL2}		44	"		"	"	"	"	"	1.5V						15.0V	D4+4		3.4		2.4		4.2	"
		45	"		"	"	"	"	"		1.5V					"	D4+5		"		"		"	"
		46	"		"	"	"	"	"			1.5V				"	D3+4		"		"		"	"
		47	"		"	"	"	"	"				1.5V			"	D2+4		"		"		"	"
		48	"		"	"	"	"	"					1.5V		"	D2+5		"		"		"	"
		49	"		"	"	"	"	"						1.5V	"	D1+4		"		"		"	"

See footnotes at end of device type 51.

TABLE III. Group A inspection for device type 51 - Continued.

Symbol	MIL-STD-883 method	Cases A C,D,T,X,Y Symbol	Terminal conditions and limits 1/														Measured terminal	Test limits						Unit
			D1	NC	Clock	D2	D3	D4	V_{SS}	D4+4	D4+5	D3+4	D2+4	D2+5	D1+4	V_{DD}		Subgroup 1 T_C = 25°C		Subgroup 2 T_C = 125°C		Subgroup 3 T_C = -55°C		
		Test no.	1	2	3	4	5	6	7	8	9	10	11	12	13	14		Min	Max	Min	Max	Min	Max	
I_{OH1}		50	5.0V		4/	5.0V	5.0V	5.0V	GND	4.6V						5.0V	D4+4	-0.51		-0.36		-0.64		mA
		51	"		"	"	"	"	"		4.6V					"	D4+5	"		"		"		"
		52	"		"	"	"	"	"			4.6V				"	D3+4	"		"		"		"
		53	"		"	"	"	"	"				4.6V			"	D2+4	"		"		"		"
		54	"		"	"	"	"	"					4.6V		"	D2+5	"		"		"		"
		55	"		"	"	"	"	"						4.6V	"	D1+4	"		"		"		"
I_{OH2}		56	15.0V		"	15.0V	15.0V	15.0V	"	13.5V						15.0V	D4+4	-3.4		-2.4		-4.2		"
		57	"		"	"	"	"	"		13.5V					"	D4+5	"		"		"		"
		58	"		"	"	"	"	"			13.5V				"	D3+4	"		"		"		"
		59	"		"	"	"	"	"				13.5V			"	D2+4	"		"		"		"
		60	"		"	"	"	"	"					13.5V		"	D2+5	"		"		"		"
		61	"		"	"	"	"	"						13.5V	"	D1+4	"		"		"		"
I_{IH1} 6/	3010	62	18.0V		18.0V	18.0V	18.0V	18.0V	"							18.0V	All inputs together		5.0					nA
I_{IH2}		63	18.0V		GND	GND	GND	GND	"							"	D1		1.0		45			"
		64	GND		18.0V	GND	GND	"	"							"	Clock		"		"			"
		65	"		GND	18.0V	GND	"	"							"	D2		"		"			"
		66	"		GND	GND	18.0V	"	"							"	D3		"		"			"
		67	"		GND	GND	GND	18.0V	"							"	D4		"		"			"
I_{IL1} 6/	3009	68	GND		GND	GND	GND	GND	"							"	All inputs together		-5.0					"
I_{IL2}		69	GND		18.0V	18.0V	18.0V	18.0V	"							"	D1		-1.0		-45			"
		70	18.0V		GND	18.0V	18.0V	"	"							"	Clock		"		"			"
		71	"		18.0V	GND	18.0V	"	"							"	D2		"		"			"
		72	"		18.0V	18.0V	GND	"	"							"	D3		"		"			"
		73	"		18.0V	18.0V	18.0V	GND	"							"	D4		"		"			"
																		Subgroup 4 T_C = 25°C						
																		Min	Max					
C_i	3012	74	7/						GND							GND	D1		12.0					pF
		75			7/				"							"	Clock		"					"
		76				7/			"							"	D2		"					"
		77					7/		"							"	D3		"					"
		78						7/	"							"	D4		"					"
																		Subgroup 7 T_C = 25°C		Subgroup 8 T_C = 125°C		Subgroup 8 T_C = -55°C		
																		Min	Max	Min	Max	Min	Max	
Truth table test 8/	3014	79	GND		3/	GND	GND	GND	GND							5.0V	None	See 9/						
		80	5.0V		"	5.0V	5.0V	5.0V	"							"	None							
		81	GND		"	GND	GND	GND	"							"	None							
		82	"		"	"	"	"	"	L		L	L		L	"	All							
		83	"		GND	"	"	"	"	"		"	"		"	"	outputs							
		84	"		GND	"	"	"	"	"		"	"		"	"	"							
		85	"		GND	"	"	"	"	"		"	"		"	"	"							
		86	5.0V		5.0V	5.0V	5.0V	5.0V	"	"		"	"		"	"	"							
		87	"		"	"	"	"	"	"		"	"		"	"	"							
		88	"		"	"	"	"	"	"		"	"		"	"	"							
		89	"		"	"	"	"	"	"		"	"		"	"	"							
		90	"		GND	"	"	"	"	H	L	H	H	L	H	"	"							
		91	"		5.0V	"	"	"	"	H	L	H	H	L	H	"	"							
		92	"		GND	"	"	"	"	L	H	L	L	H	L	"	"							
		93	"		5.0V	"	"	"	"	L	H	L	L	H	L	"	"							
		94	"		GND	"	"	"	"	L	L	L	L	L	L	"	"							

See footnotes at end of device type 51.

TABLE III. Group A inspection for device type 51 – Continued.

Symbol	MIL-STD-883 method	Cases A C,D,T,X,Y Symbol	Terminal conditions and limits 1/														Measured terminal	Test limits						Unit
			D1	NC	Clock	D2	D3	D4	V_{SS}	D4+4	D4+5	D3+4	D2+4	D2+5	D1+4	V_{DD}		Subgroup 9 T_C = 25°C		Subgroup 10 T_C = 125°C		Subgroup 11 T_C = -55°C		
		Test no.	1	2	3	4	5	6	7	8	9	10	11	12	13	14		Min	Max	Min	Max	Min	Max	
t_{PHL}	3003 Fig. 4	95			IN			IN	GND	OUT						5.0V	Clock to D4+4	20	421	30	560	20	421	ns
		96			"			IN	"		OUT					"	Clock to D4+5	"	"	"	"	"	"	"
		97			"		IN		"			OUT				"	Clock to D3+4	"	"	"	"	"	"	"
		98			"	IN			"				OUT			"	Clock to D2+4	"	"	"	"	"	"	"
		99			"	IN			"					OUT		"	Clock to D2+5	"	"	"	"	"	"	"
		100	IN		"				"						OUT	"	Clock to D1+4	"	"	"	"	"	"	"
t_{PLH}		101			"			IN	"	OUT						"	Clock to D4+4	"	"	"	"	"	"	"
		102			"			IN	"		OUT					"	Clock to D4+5	"	"	"	"	"	"	"
		103			"		IN		"			OUT				"	Clock to D3+4	"	"	"	"	"	"	"
		104			"	IN			"				OUT			"	Clock to D2+4	"	"	"	"	"	"	"
		105			"	IN			"					OUT		"	Clock to D2+5	"	"	"	"	"	"	"
		106	IN		"				"						OUT	"	Clock to D1+4	"	"	"	"	"	"	"
t_{THL}	3004 Fig. 4	107			"			IN	"	OUT						"	D4+4	13	150	18	200	13	150	"
		108			"			IN	"		OUT					"	D4+5	"	"	"	"	"	"	"
		109			"		IN		"			OUT				"	D3+4	"	"	"	"	"	"	"
		110			"	IN			"				OUT			"	D2+4	"	"	"	"	"	"	"
		111			"	IN			"					OUT		"	D2+5	"	"	"	"	"	"	"
		112	IN		"				"						OUT	"	D1+4	"	"	"	"	"	"	"
t_{TLH}		113			"			IN	"	OUT						"	D4+4	"	"	"	"	"	"	"
		114			"			IN	"		OUT					"	D4+5	"	"	"	"	"	"	"
		115			"		IN		"			OUT				"	D3+4	"	"	"	"	"	"	"
		116			"	IN			"				OUT			"	D2+4	"	"	"	"	"	"	"
		117			"	IN			"					OUT		"	D2+5	"	"	"	"	"	"	"
		118	IN		"				"						OUT	"	D1+4	"	"	"	"	"	"	"
f_{CL} (max) 10/		119			"			IN	"	OUT						"	Clock		.54		.714		.54	µs
		120			"			IN	"		OUT					"	"		"		"		"	"
		121			"		IN		"			OUT				"	"		"		"		"	"
		122			"	IN			"				OUT			"	"		"		"		"	"
		123			"	IN			"					OUT		"	"		"		"		"	"
		124	IN		"				"						OUT	"	"		"		"		"	"

See footnotes on next page.

TABLE III. Group A inspection for device type 51 – Continued.

1/ Terminals not designated may be "HIGH" level logic, "LOW" level logic, or open except as follows:
$V_{IC(pos)}$ tests; the V_{SS} terminal shall be open.
$V_{IC(neg)}$ tests; the V_{DD} terminal shall be open.
I_{SS} tests; the output terminals shall be open.

2/ The I_{SS} test measurements shall be run in sequence.

3/ Apply single clock pulse; V_{IN} = 0 V to V_{DD}.

4/ Apply clock pulse; V_{IN} = 0 V dc to V_{DD} until proper output state is achieved.

5/ V_{IH} and V_{IL} tests are performed by repeating the truth table test (numbers 79 through 94) using the input and output conditions as follows:

Test	V_{DD}	Input levels		Output levels	
		H	L	H	L
V_{IL1} V_{IH1}	5.0V	3.5V	1.5V	Min 4.5V	Max 0.5V
V_{IL2} V_{IH2}	10.0V	7.0V	3.0V	9.0V	1.0V
V_{IL3} V_{IH3}	15.0V	11.0V	4.0V	13.5V	1.5V

6/ The device manufacturer may, at his option, measure I_{IL} and I_{IH} at 25°C for each individual input or measure all inputs together.

7/ See 4.4.1c.

8/ The truth table test shall be performed in sequence.

9/ The truth table tests shall be performed at V_{IH} and $V_{DD} \leq 5$ V dc and ≥ 18 V dc.
L = V_{SS} +0.5 V maximum, and H = V_{DD} –0.50 V dc minimum.

10/ The maximum clock frequency (f_{CL}) requirement is considered met if proper output state changes occur with the pulse repetition period set to that given in the limits column.

11/ The device manufacturer may perform V_{IL}/V_{IH} tests as functional tests.

TABLE III. Group A inspection for device type 52.

Symbol	MIL-STD-883 method	Cases E,F,N,Z	Terminal conditions and limits 1/																Measured terminal	Test limits						Unit
			PI8	Q6	Q8	PI4	PI3	PI2	PI1	V_{SS}	P/S control	Clock	Serial In	Q7	PI5	PI6	PI7	V_{DD}		Subgroup 1 T_C = 25°C		Subgroup 2 T_C = 125°C		Subgroup 3 T_C = -55°C		
		Test no.	1	2	3	4	5	6	7	8	9	10	11	12	13	14	15	16		Min	Max	Min	Max	Min	Max	
V_{IC} (pos)		1	1mA															GND	PI8		1.5					V
		2				1mA												"	PI4		"					"
		3					1mA											"	PI3		"					"
		4						1mA										"	PI2		"					"
		5							1mA									"	PI1		"					"
		6									1mA							"	P/S control		"					"
		7										1mA						"	Clock		"					"
		8											1mA					"	Serial In		"					"
		9													1mA			"	PI5		"					"
		10														1mA		"	PI6		"					"
		11															1mA	"	PI7		"					"
V_{IC} (neg)		12	-1mA							GND									PI8		-6					"
		13				-1mA				"									PI4		"					"
		14					-1mA			"									PI3		"					"
		15						-1mA		"									PI2		"					"
		16							-1mA	"									PI1		"					"
		17								"	-1mA								P/S control		"					"
		18								"		-1mA							Clock		"					"
		19								"			-1mA						Serial In		"					"
		20								"					-1mA				PI5		"					"
		21								"						-1mA			PI6		"					"
		22								"							-1mA		PI7		"					"
I_{SS} 2/	3005	23	GND			GND	18.0V	GND	18.0V	"	18.0V	18.0V	GND		18.0V	GND	18.0V	18.0V	None		-0.5		-5.0			µA
		24	GND			GND	18.0V	GND	18.0V	"	"	GND	GND		18.0V	GND	18.0V	"	"		"		"			"
		25	GND			GND	18.0V	GND	18.0V	"	"	18.0V	GND		18.0V	GND	18.0V	"	"		"		"			"
		26	18.0V			18.0V	GND	18.0V	GND	"	"	18.0V	18.0V		GND	18.0V	GND	"	"		"		"			"
		27	"			"	"	"	"	"	"	GND	"		"	"	"	"	V_{SS}		"		"			"
		28	"			"	"	"	"	"	"	18.0V	"		"	"	"	"	None		"		"			"
		29	"			"	"	"	"	"	GND	18.0V	"		"	"	"	"	V_{SS}		"		"			"
		30	"			"	"	"	"	"	"	GND	"		"	"	"	"	None		"		"			"
		31	"			"	"	"	"	"	"	18.0V	"		"	"	"	"	None		"		"			"
		32	GND			GND	18.0V	GND	18.0V	"	"	18.0V	GND		18.0V	GND	18.0V	"	V_{SS}		"		"			"
V_{OH3}	3006	33	15.0V			15.0V	15.0V	15.0V	15.0V	"	15.0V	3/	15.0V		15.0V	15.0V	15.0V	15.0V	Q6	14.95		14.95		14.95		V
		34	15.0V			15.0V	15.0V	15.0V	15.0V	"	"	3/	15.0V		15.0V	15.0V	15.0V	"	Q7	14.95		14.95		14.95		"
		35	15.0V			15.0V	15.0V	15.0V	15.0V	"	"	3/	15.0V		15.0V	15.0V	15.0V	"	Q8	14.95		14.95		14.95		"
V_{OL3}	3007	36	GND			GND	GND	GND	GND	"	"	GND	GND		GND	GND	GND	"	Q6		0.05		0.05		0.05	"
		37	GND			GND	GND	GND	GND	"	"	GND	GND		GND	GND	GND	"	Q7		0.05		0.05		0.05	"
		38	GND			GND	GND	GND	GND	"	"	GND	GND		GND	GND	GND	"	Q8		0.05		0.05		0.05	"
V_{IH1} 12/		39	4/	4/	4/	4/	4/	4/	4/	"	4/	4/	4/	4/	4/	4/	4/	4/	All outputs	4/	4/	4/	4/	4/	4/	4/
V_{IH2} 12/		40	"	"	"	"	"	"	"	"	"	"	"	"	"	"	"	"	"	"	"	"	"	"	"	"
V_{IH3} 12/		41	"	"	"	"	"	"	"	"	"	"	"	"	"	"	"	"	"	"	"	"	"	"	"	"
V_{IL1} 12/		42	"	"	"	"	"	"	"	"	"	"	"	"	"	"	"	"	"	"	"	"	"	"	"	"
V_{IL2} 12/		43	"	"	"	"	"	"	"	"	"	"	"	"	"	"	"	"	"	"	"	"	"	"	"	"
V_{IL3} 12/		44	"	"	"	"	"	"	"	"	"	"	"	"	"	"	"	"	"	"	"	"	"	"	"	"
I_{OL1}		45	GND	0.4V		GND	GND	GND	GND	"	5.0V	3/	GND		GND	GND	GND	5.0V	Q6	0.51		0.36		0.64		mA
		46	"			"	"	"	"	"	5.0V	"	"	0.4V	"	"	"	5.0V	Q7	0.51		0.36		0.64		"
		47	"		0.4V	"	"	"	"	"	5.0V	"	"		"	"	"	5.0V	Q8	0.51		0.36		0.64		"
I_{OL2}		48	"	1.5V		"	"	"	"	"	15.0V	"	"		"	"	"	15.0V	Q6	3.4		2.4		4.2		"
		49	"			"	"	"	"	"	15.0V	"	"	1.5V	"	"	"	15.0V	Q7	3.4		2.4		4.2		"
		50	"		1.5V	"	"	"	"	"	15.0V	"	"		"	"	"	15.0V	Q8	3.4		2.4		4.2		"

See footnotes at end of device type 52.

TABLE III. Group A inspection for device type 52 – Continued.

Symbol	MIL-STD-883 method	Cases E,F,N,Z	Terminal conditions and limits 1/																Measured terminal	Test limits						Unit
			PI8	Q6	Q8	PI4	PI3	PI2	PI1	V_{SS}	P/S control	Clock	Serial In	Q7	PI5	PI6	PI7	V_{DD}		Subgroup 1 T_C = 25°C		Subgroup 2 T_C = 125°C		Subgroup 3 T_C = -55°C		
		Test no.	1	2	3	4	5	6	7	8	9	10	11	12	13	14	15	16		Min	Max	Min	Max	Min	Max	
I_{OH1}		51	5.0V	4.6V		5.0V	5.0V	5.0V	5.0V	GND	5.0V	3/	5.0V		5.0V	5.0V	5.0V	5.0V	Q6	-0.51		-0.36		-0.64		mA
		52	5.0V			5.0V	5.0V	5.0V	5.0V	"	5.0V	"	5.0V	4.6V	5.0V	5.0V	5.0V	5.0V	Q7	-0.51		-0.36		-0.64		"
		53	5.0V		4.6V	5.0V	5.0V	5.0V	5.0V	"	5.0V	"	5.0V		5.0V	5.0V	5.0V	5.0V	Q8	-0.51		-0.36		-0.64		"
I_{OH2}		54	15.0V	13.5V		15.0V	15.0V	15.0V	15.0V	"	15.0V	"	15.0V		15.0V	15.0V	15.0V	15.0V	Q6	-3.4		-2.4		-4.2		"
		55	15.0V			15.0V	15.0V	15.0V	15.0V	"	15.0V	"	15.0V	13.5V	15.0V	15.0V	15.0V	15.0V	Q7	-3.4		-2.4		-4.2		"
		56	15.0V		13.5V	15.0V	15.0V	15.0V	15.0V	"	15.0V	"	15.0V		15.0V	15.0V	15.0V	15.0V	Q8	-3.4		-2.4		-4.2		"
I_{IH1} 5/	3010	57	18.0V			18.0V	18.0V	18.0V	18.0V	"	18.0V	18.0V 6/	18.0V		18.0V	18.0V	18.0V	18.0V	All inputs together		11					nA
I_{IH2}		58	18.0V			GND	GND	GND	GND	"	GND	GND	GND		GND	GND	GND	"	PI8		1		45			"
		59	GND			18.0V	GND	GND	"	"	"	"	"		"	"	"	"	PI4		"		"			"
		60	"			GND	18.0V	GND	"	"	"	"	"		"	"	"	"	PI3		"		"			"
		61	"			"	GND	18.0V	"	"	"	"	"		"	"	"	"	PI2		"		"			"
		62	"			"	"	GND	18.0V	"	"	"	"		"	"	"	"	PI1		"		"			"
		63	"			"	"	"	GND	"	18.0V	"	"		"	"	"	"	P/S control		"		"			"
		64	"			"	"	"	"	"	GND	18.0V	"		"	"	"	"	Clock		"		"			"
		65	"			"	"	"	"	"	"	GND	18.0V		"	"	"	"	Serial In		"		"			"
		66	"			"	"	"	"	"	"	"	GND		18.0V	"	"	"	PI5		"		"			"
		67	"			"	"	"	"	"	"	"	"		GND	18.0V	"	"	PI6		"		"			"
		68	"			"	"	"	"	"	"	"	"		"	GND	18.0V	"	PI7		"		"			"
I_{IL1} 5/	3009	69	"			"	"	"	"	"	"	"	"		"	"	GND	"	All inputs together		-11					"
I_{IL2}		70	"			"	"	"	"	"	"	"	"		"	"	"	"	PI8		-1		-45			"
		71	"			"	"	"	"	"	"	"	"		"	"	"	"	PI4		"		"			"
		72	"			"	"	"	"	"	"	"	"		"	"	"	"	PI3		"		"			"
		73	"			"	"	"	"	"	"	"	"		"	"	"	"	PI2		"		"			"
		74	"			"	"	"	"	"	"	"	"		"	"	"	"	PI1		"		"			"
		75	"			"	"	"	"	"	"	"	"		"	"	"	"	P/S control		"		"			"
		76	"			"	"	"	"	"	"	"	"		"	"	"	"	Clock		"		"			"
		77	"			"	"	"	"	"	"	"	"		"	"	"	"	Serial In		"		"			"
		78	"			"	"	"	"	"	"	"	"		"	"	"	"	PI5		"		"			"
		79	"			"	"	"	"	"	"	"	"		"	"	"	"	PI6		"		"			"
		80	"			"	"	"	"	"	"	"	"		"	"	"	"	PI7		"		"			"
																				Subgroup 4 T_C = 25°C						
																				Min	Max					
C_i	3012	81	7/							GND								GND	PI8		12					pF
		82				7/				"								"	PI4		"					"
		83					7/			"								"	PI3		"					"
		84						7/		"								"	PI2		"					"
		85							7/	"								"	PI1		"					"
		86								"	7/							"	P/S control		"					"
		87								"		7/						"	Clock		"					"
		88								"			7/					"	Serial In		"					"
		89								"					7/			"	PI5		"					"
		90								"						7/		"	PI6		"					"
		91								"							7/	"	PI7		"					"

See footnotes at end of device type 52.

TABLE III. Group A inspection for device type 52 – Continued.

Symbol	MIL-STD-883 method	Cases E,F,N,Z	Terminal conditions and limits 1/																Measured terminal	Test limits						Unit
			PI8	Q6	Q8	PI4	PI3	PI2	PI1	V_{SS}	P/S control	Clock	Serial In	Q7	PI5	PI6	PI7	V_{DD}		Subgroup 7 T_C = 25°C		Subgroup 8 T_C = 125°C		Subgroup 8 T_C = -55°C		
		Test no.	1	2	3	4	5	6	7	8	9	10	11	12	13	14	15	16		Min	Max	Min	Max	Min	Max	
Truth table test	3014 8/	92	5.0V			5.0V	5.0V	5.0V	5.0V	GND	5.0V	5.0V	GND		5.0V	5.0V	5.0V	5.0V	None	See 9/, 10/						
		93	5.0V			5.0V	5.0V	5.0V	5.0V	"	5.0V	GND	"		5.0V	5.0V	5.0V	"	None							
		94	5.0V	H	H	5.0V	5.0V	5.0V	5.0V	"	5.0V	5.0V	"	H	5.0V	5.0V	5.0V	"	All							
		95	GND	"	"	GND	GND	GND	GND	"	GND	5.0V	"	"	GND	GND	GND	"	outputs							
		96	"	"	"	"	"	"	"	"	"	GND	"	"	"	"	"	"	"							
		97	"	"	"	"	"	"	"	"	"	5.0V	"	"	"	"	"	"	"							
		98	"	"	"	"	"	"	"	"	"	5.0V	5.0V	"	"	"	"	"	"							
		99	"	"	"	"	"	"	"	"	"	GND	"	"	"	"	"	"	"							
		100	"	"	"	"	"	"	"	"	"	5.0V	"	"	"	"	"	"	"							
		101	"	"	"	"	"	"	"	"	"	GND	"	"	"	"	"	"	"							
		102	"	"	"	"	"	"	"	"	"	5.0V	"	"	"	"	"	"	"							
		103	"	"	"	"	"	"	"	"	"	GND	"	"	"	"	"	"	"							
		104	"	"	"	"	"	"	"	"	"	5.0V	"	"	"	"	"	"	"							
		105	"	"	"	"	"	"	"	"	"	GND	"	"	"	"	"	"	"							
		106	"	"	"	"	"	"	"	"	"	5.0V	"	"	"	"	"	"	"							
		107	"	"	"	"	"	"	"	"	"	GND	"	"	"	"	"	"	"							
		108	"	L	"	"	"	"	"	"	"	5.0V	"	"	"	"	"	"	"							
		109	"	L	"	"	"	"	"	"	"	GND	"	"	"	"	"	"	"							
		110	"	H	"	"	"	"	"	"	"	5.0V	"	L	"	"	"	"	"							
		111	"	"	"	"	"	"	"	"	"	GND	"	L	"	"	"	"	"							
		112	"	"	L	"	"	"	"	"	"	5.0V	"	H	"	"	"	"	"							
		113	"	"	L	"	"	"	"	"	"	GND	"	"	"	"	"	"	"							
		114	"	"	H	"	"	"	"	"	"	5.0V	"	"	"	"	"	"	"							
		115	"	"	H	"	"	"	"	"	5.0V	5.0V	GND	"	"	"	"	"	"							
		116	"	"	H	"	"	"	"	"	5.0V	GND	"	"	"	"	"	"	"							
		117	"	L	L	"	"	"	"	"	5.0V	5.0V	"	L	"	"	"	"	"							
		118	5.0V	"	"	5.0V	5.0V	5.0V	5.0V	"	GND	GND	"	"	5.0V	5.0V	5.0V	"	"							
		119	"	"	"	"	"	"	"	"	"	5.0V	"	"	"	"	"	"	"							
		120	"	"	"	"	"	"	"	"	"	GND	"	"	"	"	"	"	"							
		121	"	"	"	"	"	"	"	"	"	5.0V	"	"	"	"	"	"	"							
		122	"	"	"	"	"	"	"	"	"	GND	"	"	"	"	"	"	"							
		123	"	"	"	"	"	"	"	"	"	5.0V	"	"	"	"	"	"	"							
		124	"	"	"	"	"	"	"	"	"	GND	"	"	"	"	"	"	"							
		125	"	"	"	"	"	"	"	"	"	5.0V	"	"	"	"	"	"	"							
		126	"	"	"	"	"	"	"	"	"	GND	"	"	"	"	"	"	"							
		127	"	"	"	"	"	"	"	"	"	5.0V	"	"	"	"	"	"	"							
		128	"	"	"	"	"	"	"	"	5.0V	GND	5.0V	"	"	"	"	"	"							
		129	"	H	H	"	"	"	"	"	5.0V	5.0V	5.0V	H	"	"	"	"	"							
		130	GND	"	"	GND	GND	GND	GND	"	GND	GND	GND	"	GND	GND	GND	"	"							
		131	"	"	"	"	"	"	"	"	"	5.0V	"	"	"	"	"	"	"							
		132	"	"	"	"	"	"	"	"	"	GND	"	"	"	"	"	"	"							
		133	"	"	"	"	"	"	"	"	"	5.0V	"	"	"	"	"	"	"							
		134	"	"	"	"	"	"	"	"	"	GND	"	"	"	"	"	"	"							
		135	"	"	"	"	"	"	"	"	"	5.0V	"	"	"	"	"	"	"							
		136	"	"	"	"	"	"	"	"	"	GND	"	"	"	"	"	"	"							
		137	"	"	"	"	"	"	"	"	"	5.0V	"	"	"	"	"	"	"							
		138	"	"	"	"	"	"	"	"	"	GND	"	"	"	"	"	"	"							
		139	"	"	"	"	"	"	"	"	"	5.0V	"	"	"	"	"	"	"							

See footnotes at end of device type 52.

TABLE III. Group A inspection for device type 52 – Continued.

Symbol	MIL-STD-883 method	Cases E,F,N,Z	Terminal conditions and limits 1/																Measured terminal	Test limits						Unit
			PI8	Q6	Q8	PI4	PI3	PI2	PI1	V_{SS}	P/S control	Clock	Serial In	Q7	PI5	PI6	PI7	V_{DD}		Subgroup 9 T_C = 25°C		Subgroup 10 T_C = 125°C		Subgroup 11 T_C = -55°C		
		Test no.	1	2	3	4	5	6	7	8	9	10	11	12	13	14	15	16		Min	Max	Min	Max	Min	Max	
t_{PHL1}	3003 Fig. 4	140	IN	OUT		IN	IN	IN	IN	GND	GND	IN	IN		IN	IN	IN	5.0V	Clock to Q6	13	338	18	450	13	338	ns
		141	IN			IN	IN	IN	IN	GND	GND	IN	IN	OUT	IN	IN	IN	5.0V	Clock to Q7	"	"	"	"	"	"	ns
		142	IN		OUT	IN	IN	IN	IN	GND	GND	IN	IN		IN	IN	IN	5.0V	Clock to Q8	"	"	"	"	"	"	ns
t_{PLH1}	3003 Fig. 4	143	IN	OUT		IN	IN	IN	IN	GND	GND	IN	IN		IN	IN	IN	5.0V	Clock to Q6	13	338	18	450	13	338	ns
		144	"			"	"	"	"	"	GND	"	"	OUT	"	"	"	"	Clock to Q7	"	"	"	"	"	"	"
		145	"		OUT	"	"	"	"	"	GND	"	"		"	"	"	"	Clock to Q8	"	"	"	"	"	"	"
t_{PHL2}		146	"	OUT		"	"	"	"	"	5.0V	"	"		"	"	"	"	Clock to Q6	"	"	"	"	"	"	"
		147	"			"	"	"	"	"	"	"	"	OUT	"	"	"	"	Clock to Q7	"	"	"	"	"	"	"
		148	"		OUT	"	"	"	"	"	"	"	"		"	"	"	"	Clock to Q8	"	"	"	"	"	"	"
t_{PLH2}		149	"	OUT		"	"	"	"	"	"	"	"		"	"	"	"	Clock to Q6	"	"	"	"	"	"	"
		150	"			"	"	"	"	"	"	"	"	OUT	"	"	"	"	Clock to Q7	"	"	"	"	"	"	"
		151	"		OUT	"	"	"	"	"	"	"	"		"	"	"	"	Clock to Q8	"	"	"	"	"	"	"
t_{THL}	3004 Fig. 4	152	"	OUT		"	"	"	"	"	"	"	"		"	"	"	"	Q6	10	210	14	280	10	210	"
		153	"			"	"	"	"	"	"	"	"	OUT	"	"	"	"	Q7	"	"	"	"	"	"	"
		154	"		OUT	"	"	"	"	"	"	"	"		"	"	"	"	Q8	"	"	"	"	"	"	"
t_{TLH}		155	"	OUT		"	"	"	"	"	"	"	"		"	"	"	"	Q6	"	"	"	"	"	"	"
		156	"			"	"	"	"	"	"	"	"	OUT	"	"	"	"	Q7	"	"	"	"	"	"	"
		157	"		OUT	"	"	"	"	"	"	"	"		"	"	"	"	Q8	"	"	"	"	"	"	"
f_{CL} (max) 11/		158		OUT						"	GND	"	"					"	Clock		.625		.833		.625	µs
		159								"	GND	"	"	OUT				"	Clock		"		"		"	µs
		160			OUT					"	GND	"	"					"	Clock		"		"		"	µs

1/ Terminals not designated may be "HIGH" level logic, "LOW" level logic, or open except as follows: $V_{IC(pos)}$ tests; the V_{SS} terminal shall be open. $V_{IC(neg)}$ tests; the V_{DD} terminal shall be open. I_{SS} test; the output terminal shall be open.
2/ I_{SS} tests; the output terminals shall be performed in sequence.
3/ Apply a single clock pulse; V_{IN} = 0 V dc to V_{DD}.
4/ V_{IH} and V_{IL} tests are performed by repeating the truth table test (numbers 92 through 139) using the input and output conditions as follows:

Test	V_{DD}	Input		Output	
		H	L	H	L
V_{IH1} V_{IL1}	5.0V	3.5V	1.5V	4.5V min	0.5V max
V_{IH2} V_{IL2}	10.0V	7.0V	3.0V	9.0V min	1.0V max
V_{IH3} V_{IL3}	15.0V	11.0V	4.0V	13.5V min	1.5V max

5/ The device manufacturer may, at his option, measure I_{IL} and I_{IH} at 25°C for each individual input or measure all inputs together.
6/ Apply six (6) clock pulses, V_{IN} = 0 V dc to V_{DD}.
7/ See 4.4.1c.
8/ Truth table test shall be run in sequence.
9/ The output voltage limits for each temperature are "H" = V_{DD} –0.5 V min and "L" = V_{SS} +0.5 V max.
10/ The truth table tests shall be performed at V_{IH} and $V_{DD} \leq 5$ V dc and ≥ 18 V dc.
11/ The maximum clock frequency (f_{CL}) requirement is considered met if proper output state changes occur with the pulse repetition period set to that given in the limits column.
12/ The device manufacturer may perform V_{IL}/V_{IH} tests as functional tests.

TABLE III. Group A inspection for device type 53.

Symbol	MIL-STD-883 method	Cases E,F,N,Z	Terminal conditions and limits 1/																Measured terminal	Test limits						Unit
			Clock B	Q4B	Q3A	Q2A	Q1A	Reset A	Data A	V_{SS}	Clock A	Q4A	Q3B	Q2B	Q1B	Reset B	Data B	V_{DD}		Subgroup 1 T_C = 25°C		Subgroup 2 T_C = 125°C		Subgroup 3 T_C = -55°C		
		Test no.	1	2	3	4	5	6	7	8	9	10	11	12	13	14	15	16		Min	Max	Min	Max	Min	Max	
V_{IC} (pos)		1									1mA							GND	Clock A		1.5					V
		2							1mA									"	Data A		"					"
		3						1mA										"	Reset A		"					"
		4	1mA															"	Clock B		"					"
		5															1mA	"	Data B		"					"
		6														1mA		"	Reset B		"					"
V_{IC} (neg)		7								GND	-1mA								Clock A		-6					"
		8							-1mA	"									Data A		"					"
		9						-1mA		"									Reset A		"					"
		10	-1mA							"									Clock B		"					"
		11								"							-1mA		Data B		"					"
		12								"						-1mA			Reset B		"					"
I_{SS} 2/	3005	13	GND					18.0V	18.0V	"	GND					18.0V	18.0V	18.0V	V_{SS}		-0.5		-5.0			µA
		14	18.0V					18.0V	"	"	18.0V					18.0V	"	"	None		"		"			"
		15	18.0V					GND	"	"	18.0V					GND	"	"	"		"		"			"
		16	GND					"	"	"	GND					"	"	"	"		"		"			"
		17	18.0V					"	"	"	18.0V					"	"	"	"		"		"			"
		18	18.0V					"	GND	"	18.0V					"	GND	"	"		"		"			"
		19	GND					"	GND	"	GND					"	GND	"	"		"		"			"
		20	18.0V					"	GND	"	18.0V					"	GND	"	"		"		"			"
		21	18.0V					"	18.0V	"	18.0V					"	18.0V	"	"		"		"			"
		22	GND					"	18.0V	"	GND					"	18.0V	"	"		"		"			"
		23	18.0V					"	18.0V	"	18.0V					"	18.0V	"	"		"		"			"
		24	18.0V					"	GND	"	18.0V					"	GND	"	V_{SS}		"		"			"
		25	GND					"	GND	"	GND					"	GND	"	V_{SS}		"		"			"
		26	18.0V					"	GND	"	18.0V					"	GND	"	None		"		"			"
		27	18.0V					"	18.0V	"	18.0V					"	18.0V	"	V_{SS}		"		"			"
V_{OH3}	3006	28	GND					"	15.0V	"	3/					"	GND	15.0V	Q1A	14.95		14.95		14.95		V
		29	"					"	"	"	"					"	"	"	Q2A	"		"		"		"
		30	"					"	"	"	"					"	"	"	Q3A	"		"		"		"
		31	"					"	"	"	"					"	"	"	Q4A	"		"		"		"
		32	3/					"	GND	"	GND					"	15.0V	"	Q1B	"		"		"		"
		33	"					"	"	"	"					"	"	"	Q2B	"		"		"		"
		34	"					"	"	"	"					"	"	"	Q3B	"		"		"		"
		35	"					"	"	"	"					"	"	"	Q4B	"		"		"		"
V_{OL3}	3007	36	GND					"	"	"	3/					"	GND	"	Q1A		0.05		0.05		0.05	"
		37	"					"	"	"	"					"	"	"	Q2A		"		"		"	"
		38	"					"	"	"	"					"	"	"	Q3A		"		"		"	"
		39	"					"	"	"	"					"	"	"	Q4A		"		"		"	"
		40	3/					"	"	"	GND					"	"	"	Q1B		"		"		"	"
		41	"					"	"	"	"					"	"	"	Q2B		"		"		"	"
		42	"					"	"	"	"					"	"	"	Q3B		"		"		"	"
		43	"					"	"	"	"					"	"	"	Q4B		"		"		"	"
V_{IH1}		44	4/	4/	4/	4/	4/	4/	4/	"	4/	4/	4/	4/	4/	4/	4/	4/	All outputs	4/	4/	4/	4/	4/	4/	4/
V_{IH2}		45	"	"	"	"	"	"	"	"	"	"	"	"	"	"	"	"	"	"	"	"	"	"	"	"
V_{IH3}		46	"	"	"	"	"	"	"	"	"	"	"	"	"	"	"	"	"	"	"	"	"	"	"	"
V_{IL1}		47	"	"	"	"	"	"	"	"	"	"	"	"	"	"	"	"	"	"	"	"	"	"	"	"
V_{IL2}		48	"	"	"	"	"	"	"	"	"	"	"	"	"	"	"	"	"	"	"	"	"	"	"	"
V_{IL3}		49	"	"	"	"	"	"	"	"	"	"	"	"	"	"	"	"	"	"	"	"	"	"	"	"

See footnotes at end of device type 53.

TABLE III. Group A inspection for device type 53 – Continued.

Symbol	MIL-STD-883 method	Cases E,F,N,Z	Terminal conditions and limits 1/																Measured terminal	Test limits						Unit
			Clock B	Q4B	Q3A	Q2A	Q1A	Reset A	Data A	V_{SS}	Clock A	Q4A	Q3B	Q2B	Q1B	Reset B	Data B	V_{DD}		Subgroup 1 T_C = 25°C		Subgroup 2 T_C = 125°C		Subgroup 3 T_C = -55°C		
		Test no.	1	2	3	4	5	6	7	8	9	10	11	12	13	14	15	16		Min	Max	Min	Max	Min	Max	
I_{OL1}		50	GND				0.4V	GND	GND	GND	3/					GND	GND	5.0V	Q1A	0.51		0.36		0.64		mA
		51	"			0.4V		"	"	"	"					"	"	"	Q2A	"		"		"		"
		52	"		0.4V			"	"	"	"					"	"	"	Q3A	"		"		"		"
		53	"					"	"	"	"	0.4V				"	"	"	Q4A	"		"		"		"
		54	3/					"	"	"	GND				0.4V	"	"	"	Q1B	"		"		"		"
		55	"					"	"	"	"			0.4V		"	"	"	Q2B	"		"		"		"
		56	"					"	"	"	"		0.4V			"	"	"	Q3B	"		"		"		"
		57	"	0.4V				"	"	"	"					"	"	"	Q4B	"		"		"		"
I_{OL2}		58	GND				1.5V	"	"	"	3/					"	"	15.0V	Q1A	3.4		2.4		4.2		"
		59	"			1.5V		"	"	"	"					"	"	"	Q2A	"		"		"		"
		60	"		1.5V			"	"	"	"					"	"	"	Q3A	"		"		"		"
		61	"					"	"	"	"	1.5V				"	"	"	Q4A	"		"		"		"
		62	3/					"	"	"	GND				1.5V	"	"	"	Q1B	"		"		"		"
		63	"					"	"	"	"			1.5V		"	"	"	Q2B	"		"		"		"
		64	"					"	"	"	"		1.5V			"	"	"	Q3B	"		"		"		"
		65	"	1.5V				"	"	"	"					"	"	"	Q4B	"		"		"		"
I_{OH1}		66	GND				4.6V	"	5.0V	"	3/					"	"	5.0V	Q1A	-0.51		-0.36		-0.64		"
		67	"			4.6V		"	"	"	"					"	"	"	Q2A	"		"		"		"
		68	"		4.6V			"	"	"	"					"	"	"	Q3A	"		"		"		"
		69	"					"	"	"	"	4.6V				"	"	"	Q4A	"		"		"		"
		70	3/					"	GND	"	GND				4.6V	"	5.0V	"	Q1B	"		"		"		"
		71	"					"	"	"	"			4.6V		"	"	"	Q2B	"		"		"		"
		72	"					"	"	"	"		4.6V			"	"	"	Q3B	"		"		"		"
		73	"	4.6V				"	"	"	"					"	"	"	Q4B	"		"		"		"
I_{OH2}		74	GND				13.5V	"	15.0V	"	3/					"	GND	15.0V	Q1A	-3.4		-2.4		-4.2		"
		75	"			13.5V		"	"	"	"					"	"	"	Q2A	"		"		"		"
		76	"		13.5V			"	"	"	"					"	"	"	Q3A	"		"		"		"
		77	"					"	"	"	"	13.5V				"	"	"	Q4A	"		"		"		"
		78	3/					"	GND	"	GND				13.5V	"	15.0V	"	Q1B	"		"		"		"
		79	"					"	"	"	"			13.5V		"	"	"	Q2B	"		"		"		"
		80	"					"	"	"	"		13.5V			"	"	"	Q3B	"		"		"		"
		81	"	13.5V				"	"	"	"					"	"	"	Q4B	"		"		"		"
I_{IH1} 5/	3010	82	18.0V					18.0V	18.0V	"	18.0V					18.0V	18.0V	18.0V	All inputs together		6.0					nA
I_{IH2}		83	GND					GND	GND	"	18.0V					GND	GND	"	Clock A		1.0		45			"
		84	GND					GND	18.0V	"	GND					"	"	"	Data A		"		"			"
		85	GND					18.0V	GND	"	"					"	"	"	Reset A		"		"			"
		86	18.0V					GND	"	"	"					"	"	"	Clock B		"		"			"
		87	GND					"	"	"	"					"	18.0V	"	Data B		"		"			"
		88	"					"	"	"	"					18.0V	GND	"	Reset B		"		"			"
I_{IL1} 5/	3009	89	"					"	"	"	"					GND	"	"	All inputs together		-6.0					"
I_{IL2}		90	"					"	"	"	"					"	"	"	Clock A		-1.0		-45			"
		91	"					"	"	"	"					"	"	"	Data A		"		"			"
		92	"					"	"	"	"					"	"	"	Reset A		"		"			"
		93	"					"	"	"	"					"	"	"	Clock B		"		"			"
		94	"					"	"	"	"					"	"	"	Data B		"		"			"
		95	"					"	"	"	"					"	"	"	Reset B		"		"			"

See footnotes at end of device type 53.

TABLE III. Group A inspection for device type 53 – Continued.

Symbol	MIL-STD-883 method	Cases E,F,N,Z	Terminal conditions and limits 1/																Measured terminal	Test limits						Unit
			Clock B	Q4B	Q3A	Q2A	Q1A	Reset A	Data A	V_{SS}	Clock A	Q4A	Q3B	Q2B	Q1B	Reset B	Data B	V_{DD}		Subgroup 4 T_C = 25°C						
		Test no.	1	2	3	4	5	6	7	8	9	10	11	12	13	14	15	16		Min	Max					
C_i	3012	96								GND	6/							GND	Clock A		12					pF
		97							6/	"								"	Data A		"					"
		98						6/		"								"	Reset A		"					"
		99	6/							"								"	Clock B		"					"
		100								"							6/	"	Data B		"					"
		101								"						6/		"	Reset B		"					"
																				Subgroup 7 T_C = 25°C		Subgroup 8 T_C = 125°C		Subgroup 8 T_C = -55°C		Unit
																				Min	Max	Min	Max	Min	Max	
Truth table test 7/	3014	102	5.0V	L	L	L	L	5.0V	5.0V	GND	5.0V	L	L	L	L	5.0V	5.0V	5.0V	All outputs	See 8/, 9/						
		103	5.0V	"	"	"	L	GND	"	"	5.0V	"	"	"	L	GND	"	"	"							
		104	GND	"	"	"	L	"	"	"	GND	"	"	"	L	"	"	"	"							
		105	5.0V	"	"	"	H	"	"	"	5.0V	"	"	"	H	"	"	"	"							
		106	5.0V	"	"	"	H	"	GND	"	5.0V	"	"	"	H	"	GND	"	"							
		107	GND	"	"	"	H	"	GND	"	GND	"	"	"	H	"	GND	"	"							
		108	5.0V	"	"	H	L	"	GND	"	5.0V	"	"	H	L	"	GND	"	"							
		109	5.0V	"	"	H	L	"	5.0V	"	5.0V	"	"	H	L	"	5.0V	"	"							
		110	GND	"	"	H	L	"	"	"	GND	"	"	H	L	"	"	"	"							
		111	5.0V	"	H	L	H	"	"	"	5.0V	"	H	L	H	"	"	"	"							
		112	GND	"	H	L	"	"	"	"	GND	"	H	L	"	"	"	"	"							
		113	5.0V	H	L	H	"	"	"	"	5.0V	H	L	H	"	"	"	"	"							
		114	GND	H	L	"	"	"	"	"	GND	H	L	"	"	"	"	"	"							
		115	5.0V	L	H	"	"	"	"	"	5.0V	L	H	"	"	"	"	"	"							
		116	GND	L	H	"	"	"	"	"	GND	L	H	"	"	"	"	"	"							
		117	5.0V	H	H	"	"	"	"	"	5.0V	H	H	"	"	"	"	"	"							
		118	GND	H	H	"	"	"	"	"	GND	H	H	"	"	"	"	"	"							
		119	GND	L	L	L	L	5.0V	"	"	GND	L	L	L	L	5.0V	"	"	"							
		120	5.0V	L	L	L	L	5.0V	"	"	5.0V	L	L	L	L	5.0V	"	"	"							
																				Subgroup 9 T_C = 25°C		Subgroup 10 T_C = 125°C		Subgroup 11 T_C = -55°C		
																				Min	Max	Min	Max	Min	Max	
t_{PHL1}	3003 Fig. 4	121	IN				OUT	GND	IN	GND	IN					GND	IN	5.0V	Clock A to Q1A	20	421	30	560	20	421	ns
		122	"			OUT		"	"	"	"					"	"	"	Clock A to Q2A	"	"	"	"	"	"	"
		123	"		OUT			"	"	"	"					"	"	"	Clock A to Q3A	"	"	"	"	"	"	"
		124	"					"	"	"	"	OUT				"	"	"	Clock A to Q4A	"	"	"	"	"	"	"
		125	"					"	"	"	"				OUT	"	"	"	Clock B to Q1B	"	"	"	"	"	"	"
		126	"					"	"	"	"			OUT		"	"	"	Clock B to Q2B	"	"	"	"	"	"	"
		127	"					"	"	"	"		OUT			"	"	"	Clock B to Q3B	"	"	"	"	"	"	"
		128	"	OUT				"	"	"	"					"	"	"	Clock B to Q4B	"	"	"	"	"	"	"

See footnotes at end of device type 53.

TABLE III. Group A inspection for device type 53 – Continued.

Symbol	MIL-STD-883 method	Cases E,F,N,Z	Terminal conditions and limits 1/																Measured terminal	Test limits						Unit
			Clock B	Q4B	Q3A	Q2A	Q1A	Reset A	Data A	V_{SS}	Clock A	Q4A	Q3B	Q2B	Q1B	Reset B	Data B	V_{DD}		Subgroup 9 T_C = 25°C		Subgroup 10 T_C = 125°C		Subgroup 11 T_C = -55°C		
		Test no.	1	2	3	4	5	6	7	8	9	10	11	12	13	14	15	16		Min	Max	Min	Max	Min	Max	
t_{PLH1}	3003 Fig. 4	129	IN				OUT	GND	IN	GND	IN					GND	IN	5.0V	Clock A to Q1A	20	421	30	560	20	421	ns
		130	"			OUT		"	"	"	"					"	"	"	Clock A to Q2A	"	"	"	"	"	"	"
		131	"		OUT			"	"	"	"					"	"	"	Clock A to Q3A	"	"	"	"	"	"	"
		132	"					"	"	"	"	OUT				"	"	"	Clock A to Q4A	"	"	"	"	"	"	"
		133	"					"	"	"	"				OUT	"	"	"	Clock B to Q1B	"	"	"	"	"	"	"
		134	"					"	"	"	"			OUT		"	"	"	Clock B to Q2B	"	"	"	"	"	"	"
		135	"					"	"	"	"		OUT			"	"	"	Clock B to Q3B	"	"	"	"	"	"	"
		136	"	OUT				"	"	"	"					"	"	"	Clock B to Q4B	"	"	"	"	"	"	"
t_{PHL2}	3003 Fig. 4	137	GND				OUT	IN	IN	GND	GND					IN	IN	5.0V	Reset A to Q1A	20	368	30	490	20	368	ns
		138	"			OUT		"	"	"	"					"	"	"	Reset A to Q2A	"	"	"	"	"	"	"
		139	"		OUT			"	"	"	"					"	"	"	Reset A to Q3A	"	"	"	"	"	"	"
		140	"					"	"	"	"	OUT				"	"	"	Reset A to Q4A	"	"	"	"	"	"	"
		141	"					"	"	"	"				OUT	"	"	"	Reset B to Q1B	"	"	"	"	"	"	"
		142	"					"	"	"	"			OUT		"	"	"	Reset B to Q2B	"	"	"	"	"	"	"
		143	"					"	"	"	"		OUT			"	"	"	Reset B to Q3B	"	"	"	"	"	"	"
		144	"	OUT				"	"	"	"					"	"	"	Reset B to Q4B	"	"	"	"	"	"	"
t_{THL}	3004 Fig. 4	145	IN				OUT	GND	"	"	IN					GND	"	"	Q1A	13	210	18	280	13	210	"
		146	"			OUT		"	"	"	"					"	"	"	Q2A	"	"	"	"	"	"	"
		147	"		OUT			"	"	"	"					"	"	"	Q3A	"	"	"	"	"	"	"
		148	"					"	"	"	"	OUT				"	"	"	Q4A	"	"	"	"	"	"	"
		149	"					"	"	"	"				OUT	"	"	"	Q1B	"	"	"	"	"	"	"
		150	"					"	"	"	"			OUT		"	"	"	Q2B	"	"	"	"	"	"	"
		151	"					"	"	"	"		OUT			"	"	"	Q3B	"	"	"	"	"	"	"
		152	"	OUT				"	"	"	"					"	"	"	Q4B	"	"	"	"	"	"	"
t_{TLH}		153	"				OUT	"	"	"	"					"	"	"	Q1A	"	"	"	"	"	"	"
		154	"			OUT		"	"	"	"					"	"	"	Q2A	"	"	"	"	"	"	"
		155	"		OUT			"	"	"	"					"	"	"	Q3A	"	"	"	"	"	"	"
		156	"					"	"	"	"	OUT				"	"	"	Q4A	"	"	"	"	"	"	"
		157	"					"	"	"	"				OUT	"	"	"	Q1B	"	"	"	"	"	"	"
		158	"					"	"	"	"			OUT		"	"	"	Q2B	"	"	"	"	"	"	"
		159	"					"	"	"	"		OUT			"	"	"	Q3B	"	"	"	"	"	"	"
		160	"	OUT				"	"	"	"					"	"	"	Q4B	"	"	"	"	"	"	"

See footnotes at end of device type 53.

TABLE III. Group A inspection for device type 53 – Continued.

Symbol	MIL-STD-883 method	Cases E,F,N,Z	Terminal conditions and limits 1/																Measured terminal	Test limits						Unit
			Clock B	Q4B	Q3A	Q2A	Q1A	Reset A	Data A	V_{SS}	Clock A	Q4A	Q3B	Q2B	Q1B	Reset B	Data B	V_{DD}		Subgroup 9 T_C = 25°C		Subgroup 10 T_C = 125°C		Subgroup 11 T_C = -55°C		
		Test no.	1	2	3	4	5	6	7	8	9	10	11	12	13	14	15	16		Min	Max	Min	Max	Min	Max	
f_{CL} (max) 10/		161	IN				OUT	GND	IN	GND	IN					GND	IN	5.0v	Clock A		.5		.667		.5	µs
		162	"			OUT		"	"	"	"					"	"	"	"		"		"		"	"
		163	"		OUT			"	"	"	"					"	"	"	"		"		"		"	"
		164	"					"	"	"	"	OUT				"	"	"	"		"		"		"	"
		165	"					"	"	"	"				OUT	"	"	"	Clock B		"		"		"	"
		166	"					"	"	"	"			OUT		"	"	"	"		"		"		"	"
		167	"					"	"	"	"		OUT			"	"	"	"		"		"		"	"
		168	"	OUT				"	"	"	"					"	"	"	"		"		"		"	"

1/ Terminals not designated may be "HIGH" level logic, "LOW" level logic, or open except as follows: $V_{IC(pos)}$ tests; the V_{SS} terminal shall be open. $V_{IC(neg)}$ tests; the V_{DD} terminal shall be open. I_{SS} test; the output terminal shall be open.

2/ I_{SS} test measurements shall be performed in sequence.

3/ Apply a clock pulse; V_{IN} = 0 V dc to V_{DD} until proper output state is achieved.

4/ V_{IH} and V_{IL} tests are performed by repeating the truth table tests (numbers 102 through 120) using the input conditions as follows:

Test	V_{DD}	Input		Output	
		H	L	H	L
V_{IH1} V_{IL1}	5.0V	3.5V	1.5V	4.5V min	0.5 max
V_{IH2} V_{IL2}	10.0V	7.0V	3.0V	9.0V min	1.0V max
V_{IH3} V_{IL3}	15.0V	11.0V	4.0V	13.5V min	1.5V max

5/ The device manufacturer may, at his option, measure I_{IL} and I_{IH} at 25°C for each individual input or measure all inputs together.

6/ See 4.4.1c.

7/ Truth table test shall run in sequence.

8/ The truth table test shall be performed at V_{IH} and $V_{DD} \leq 5.0$ V dc and ≥ 18.0 V dc.

9/ The output voltage limits for each temperature are "H" = V_{DD} –0.5 V min and "L" = V_{SS} +0.5 V max.

10/ The maximum clock frequency (f_{CL}) requirement is considered met if proper output state changes occur with the pulse repetition period set to that given in the limits column.

TABLE III. Group A inspection for device type 54.

Symbol	MIL-STD-883 method	Cases E,F,N,Z	Terminal conditions and limits 1/																Measured terminal	Test limits						Unit
			PI8	Q6	Q8	PI4	PI3	PI2	PI1	V_{SS}	P/S control	Clock	Serial In	Q7	PI5	PI6	PI7	V_{DD}		Subgroup 1 T_C = 25°C		Subgroup 2 T_C = 125°C		Subgroup 3 T_C = -55°C		
		Test no.	1	2	3	4	5	6	7	8	9	10	11	12	13	14	15	16		Min	Max	Min	Max	Min	Max	
V_{IC} (pos)		1	1mA															GND	PI8		1.5					V
		2				1mA												"	PI4		"					"
		3					1mA											"	PI3		"					"
		4						1mA										"	PI2		"					"
		5							1mA									"	PI1		"					"
		6									1mA							"	P/S control		"					"
		7										1mA						"	Clock		"					"
		8											1mA					"	Serial In		"					"
		9													1mA			"	PI5		"					"
		10														1mA		"	PI6		"					"
		11															1mA	"	PI7		"					"
V_{IC} (neg)		12	-1mA							GND									PI8		-6					"
		13				-1mA				"									PI4		"					"
		14					-1mA			"									PI3		"					"
		15						-1mA		"									PI2		"					"
		16							-1mA	"									PI1		"					"
		17								"	-1mA								P/S control		"					"
		18								"		-1mA							Clock		"					"
		19								"			-1mA						Serial In		"					"
		20								"					-1mA				PI5		"					"
		21								"						-1mA			PI6		"					"
		22								"							-1mA		PI7		"					"
I_{SS} 2/	3005	23	GND			GND	18.0V	GND	18.0V	"	18.0V	GND	GND		18.0V	GND	18.0V	18.0V	V_{SS}		-0.5		-5.0			µA
		24	18.0V			18.0V	GND	18.0V	GND	"	18.0V	GND	18.0V		GND	18.0V	GND	"	V_{SS}		"		"			"
		25	18.0V			18.0V	GND	18.0V	GND	"	18.0V	18.0V	18.0V		GND	18.0V	GND	"	None		"		"			"
		26	18.0V			18.0V	GND	18.0V	GND	"	GND	"	18.0V		GND	18.0V	GND	"	V_{SS}		"		"			"
		27	GND			GND	18.0V	GND	18.0V	"	18.0V	"	GND		18.0V	GND	18.0V	"	None		"		"			"
		28	GND			GND	18.0V	GND	18.0V	"	GND	"	GND		18.0V	GND	18.0V	"	V_{SS}		"		"			"
		29	GND			GND	18.0V	GND	18.0V	"	GND	GND	GND		18.0V	GND	18.0V	"	V_{SS}		"		"			"
V_{OH3}	3006	30	15.0V			15.0V	15.0V	15.0V	15.0V	"	15.0V	3/	15.0V		15.0V	15.0V	15.0V	15.0V	Q6	14.95		14.95		14.95		V
		31	15.0V			15.0V	15.0V	15.0V	15.0V	"	"	"	15.0V		15.0V	15.0V	15.0V	"	Q7	14.95		14.95		14.95		"
		32	15.0V			15.0V	15.0V	15.0V	15.0V	"	"	"	15.0V		15.0V	15.0V	15.0V	"	Q8	14.95		14.95		14.95		"
V_{OL3}	3007	33	GND			GND	GND	GND	GND	"	"	"	GND		GND	GND	GND	"	Q6		.05		.05		.05	"
		34	GND			GND	GND	GND	GND	"	"	"	GND		GND	GND	GND	"	Q7		.05		.05		.05	"
		35	GND			GND	GND	GND	GND	"	"	"	GND		GND	GND	GND	"	Q8		.05		.05		.05	"
V_{IH1}		36	4/	4/	4/	4/	4/	4/	4/	"	4/	4/	4/	4/	4/	4/	4/	4/	All outputs	4/	4/	4/	4/	4/	4/	4/
V_{IH2}		37	"	"	"	"	"	"	"	"	"	"	"	"	"	"	"	"	"	"	"	"	"	"	"	"
V_{IH3}		38	"	"	"	"	"	"	"	"	"	"	"	"	"	"	"	"	"	"	"	"	"	"	"	"
V_{IL1}		39	"	"	"	"	"	"	"	"	"	"	"	"	"	"	"	"	"	"	"	"	"	"	"	"
V_{IL2}		40	"	"	"	"	"	"	"	"	"	"	"	"	"	"	"	"	"	"	"	"	"	"	"	"
V_{IL3}		41	"	"	"	"	"	"	"	"	"	"	"	"	"	"	"	"	"	"	"	"	"	"	"	"
I_{OL1}		42	GND	0.4V		GND	GND	GND	GND	"	5.0V	3/	GND		GND	GND	GND	5.0V	Q6	0.51		0.36		0.64		mA
		43	"			"	"	"	"	"	5.0V	"	"	0.4V	"	"	"	5.0V	Q7	0.51		0.36		0.64		"
		44	"		0.4V	"	"	"	"	"	5.0V	"	"		"	"	"	5.0V	Q8	0.51		0.36		0.64		"
I_{OL2}		45	"	1.5V		"	"	"	"	"	15.0V	"	"		"	"	"	15.0V	Q6	3.4		2.4		4.2		"
		46	"			"	"	"	"	"	15.0V	"	"	1.5V	"	"	"	15.0V	Q7	3.4		2.4		4.2		"
		47	"		1.5V	"	"	"	"	"	15.0V	"	"		"	"	"	15.0V	Q8	3.4		2.4		4.2		"
I_{OH1}		48	5.0V	4.6V		5.0V	5.0V	5.0V	5.0V	"	5.0V	"	5.0V		5.0V	5.0V	5.0V	5.0V	Q6	-0.51		-0.36		-0.64		"
		49	5.0V			5.0V	5.0V	5.0V	5.0V	"	5.0V	"	5.0V	4.6V	5.0V	5.0V	5.0V	5.0V	Q7	-0.51		-0.36		-0.64		"
		50	5.0V		4.6V	5.0V	5.0V	5.0V	5.0V	"	5.0V	"	5.0V		5.0V	5.0V	5.0V	5.0V	Q8	-0.51		-0.36		-0.64		"

See footnotes at end of device type 54.

TABLE III. Group A inspection for device type 54 – Continued.

Symbol	MIL-STD-883 method	Cases E,F,N,Z	Terminal conditions and limits 1/																Measured terminal	Test limits						Unit
			PI8	Q6	Q8	PI4	PI3	PI2	PI1	V_{SS}	P/S control	Clock	Serial In	Q7	PI5	PI6	PI7	V_{DD}		Subgroup 1 T_C = 25°C		Subgroup 2 T_C = 125°C		Subgroup 3 T_C = -55°C		
		Test no.	1	2	3	4	5	6	7	8	9	10	11	12	13	14	15	16		Min	Max	Min	Max	Min	Max	
I_{OH2}		51	15.0V	13.5V		15.0V	15.0V	15.0V	15.0V	GND	15.0V	3/	15.0V		15.0V	15.0V	15.0V	15.0V	Q6	-3.4		-2.4		-4.2		mA
		52	15.0V			15.0V	15.0V	15.0V	15.0V	"	15.0V	3/	15.0V	13.5V	15.0V	15.0V	15.0V	15.0V	Q7	-3.4		-2.4		-4.2		mA
		53	15.0V		13.5V	15.0V	15.0V	15.0V	15.0V	"	15.0V	3/	15.0V		15.0V	15.0V	15.0V	15.0V	Q8	-3.4		-2.4		-4.2		mA
I_{IH1} 5/	3010	54	18.0V			18.0V	18.0V	18.0V	18.0V	"	18.0V	18.0V	18.0V		18.0V	18.0V	18.0V	18.0V	All inputs together		1100					nA
I_{IH2}		55	18.0V			GND	GND	GND	GND	"	GND	GND	GND		GND	GND	GND	"	PI8		100		100			"
		56	GND			18.0V	GND	GND	"	"	"	"	"		"	"	"	"	PI4		"		"			"
		57	"			GND	18.0V	GND	"	"	"	"	"		"	"	"	"	PI3		"		"			"
		58	"			"	GND	18.0V	"	"	"	"	"		"	"	"	"	PI2		"		"			"
		59	"			"	"	GND	18.0V	"	"	"	"		"	"	"	"	PI1		"		"			"
		60	"			"	"	"	GND	"	18.0V	"	"		"	"	"	"	P/S control		"		"			"
		61	"			"	"	"	"	"	GND	18.0V	"		"	"	"	"	Clock		"		"			"
		62	"			"	"	"	"	"	"	GND	18.0V		"	"	"	"	Serial In		"		"			"
		63	"			"	"	"	"	"	"	"	GND		18.0V	"	"	"	PI5		"		"			"
		64	"			"	"	"	"	"	"	"	"		GND	18.0V	"	"	PI6		"		"			"
		65	"			"	"	"	"	"	"	"	"		"	GND	18.0V	"	PI7		"		"			"
I_{IL1} 5/	3009	66	"			"	"	"	"	"	"	"	"		"	"	GND	"	All inputs together		-1100					"
I_{IL2}		67	"			"	"	"	"	"	"	"	"		"	"	"	"	PI8		-100		-100			"
		68	"			"	"	"	"	"	"	"	"		"	"	"	"	PI4		"		"			"
		69	"			"	"	"	"	"	"	"	"		"	"	"	"	PI3		"		"			"
		70	"			"	"	"	"	"	"	"	"		"	"	"	"	PI2		"		"			"
		71	"			"	"	"	"	"	"	"	"		"	"	"	"	PI1		"		"			"
		72	"			"	"	"	"	"	"	"	"		"	"	"	"	P/S control		"		"			"
		73	"			"	"	"	"	"	"	"	"		"	"	"	"	Clock		"		"			"
		74	"			"	"	"	"	"	"	"	"		"	"	"	"	Serial In		"		"			"
		75	"			"	"	"	"	"	"	"	"		"	"	"	"	PI5		"		"			"
		76	"			"	"	"	"	"	"	"	"		"	"	"	"	PI6		"		"			"
		77	"			"	"	"	"	"	"	"	"		"	"	"	"	PI7		"		"			"
																				Subgroup 4 T_C=25°C						
																				Min	Max					
C_i	3012	78	6/							GND								GND	PI8		12					pF
		79				6/				"								"	PI4		"					"
		80					6/			"								"	PI3		"					"
		81						6/		"								"	PI2		"					"
		82							6/	"								"	PI1		"					"
		83								"	6/							"	P/S control		"					"
		84								"		6/						"	Clock		"					"
		85								"			6/					"	Serial In		"					"
		86								"					6/			"	PI5		"					"
		87								"						6/		"	PI6		"					"
		88								"							6/	"	PI7		"					"

See footnotes at end of device type 54.

TABLE III. Group A inspection for device type 54 – Continued.

Symbol	MIL-STD-883 method	Cases E,F,N,Z	Terminal conditions and limits 1/																Measured terminal	Test limits						Unit
			PI8	Q6	Q8	PI4	PI3	PI2	PI1	V_{SS}	P/S control	Clock	Serial In	Q7	PI5	PI6	PI7	V_{DD}		Subgroup 7 T_C = 25°C		Subgroup 8 T_C = 125°C		Subgroup 8 T_C = -55°C		
		Test no.	1	2	3	4	5	6	7	8	9	10	11	12	13	14	15	16		Min	Max	Min	Max	Min	Max	
Truth table test 7/	3014	89	GND	L	L	GND	GND	GND	GND	GND	5.0V	5.0V	GND	L	GND	GND	GND	5.0V	All outputs	See 9/, 10/						
		90	GND	"	"	GND	GND	GND	GND	"	GND	5.0V	GND	"	GND	GND	GND	"	"							
		91	5.0V	"	"	5.0V	5.0V	5.0V	GND	"	GND	8/	5.0V	"	5.0V	5.0V	5.0V	"	"							
		92	5.0V	"	"	5.0V	5.0V	GND	5.0V	"	GND	8/	GND	"	5.0V	5.0V	5.0V	"	"							
		93	5.0V	"	"	5.0V	GND	5.0V	GND	"	GND	8/	5.0V	"	5.0V	5.0V	"	"	"							
		94	"	"	"	GND	5.0V	GND	"	"	"	8/	"	"	5.0V	"	"	"	"							
		95	"	"	"	5.0V	GND	"	"	"	"	8/	"	"	GND	"	"	"	"							
		96	"	"	"	5.0V	"	"	"	"	"	GND	"	"	GND	"	"	"	"							
		97	"	H	"	GND	"	"	"	"	"	5.0V	"	"	5.0V	GND	"	"	"							
		98	"	H	"	"	"	"	"	"	"	GND	"	"	5.0V	GND	"	"	"							
		99	"	L	"	"	"	"	"	"	"	5.0V	"	H	GND	5.0V	GND	"	"							
		100	"	L	"	"	"	"	"	"	"	GND	"	H	"	5.0V	GND	"	"							
		101	GND	H	H	"	"	"	"	"	"	5.0V	"	L	"	GND	5.0V	"	"							
		102	5.0V	"	L	"	"	"	"	"	"	8/	"	H	"	"	GND	"	"							
		103	GND	"	H	"	"	"	"	"	"	8/	"	H	"	"	"	"	"							
		104	"	"	H	"	"	"	"	"	"	GND	"	H	"	"	"	"	"							
		105	"	L	L	"	"	"	"	"	5.0V	GND	"	L	"	"	"	"	"							
		106	"	"	"	"	"	"	"	"	GND	GND	GND	"	"	"	"	"	"							
		107	5.0V	"	"	5.0V	5.0V	5.0V	5.0V	"	"	5.0V	"	"	5.0V	5.0V	5.0V	"	"							
		108	"	"	"	"	"	"	"	"	"	8/	"	"	"	"	"	"	"							
		109	"	"	"	"	"	"	"	"	"	"	"	"	"	"	"	"	"							
		110	"	"	"	"	"	"	"	"	"	"	"	"	"	"	"	"	"							
		111	"	"	"	"	"	"	"	"	"	"	"	"	"	"	"	"	"							
		112	"	"	"	"	"	"	"	"	"	GND	"	"	"	"	"	"	"							
		113	"	H	H	"	"	"	"	"	5.0V	GND	"	H	"	"	"	"	"							
		114	"	"	"	"	"	"	"	"	GND	GND	5.0V	"	"	"	"	"	"							
		115	GND	"	"	GND	GND	GND	"	"	"	5.0V	"	"	GND	GND	GND	"	"							
		116	"	"	"	GND	GND	5.0V	"	"	"	8/	"	"	"	"	"	"	"							
		117	"	"	"	GND	5.0V	"	"	"	"	"	"	"	"	"	"	"	"							
		118	"	"	"	5.0V	5.0V	"	"	"	"	"	"	"	"	"	"	"	"							
		119	"	"	"	5.0V	5.0V	"	"	"	"	"	"	"	5.0V	"	"	"	"							
		120	"	L	L	GND	GND	GND	GND	"	8/	5.0V	"	L	GND	"	"	"	"							
		121	"	"	"	GND	GND	"	"	"	GND	8/	"	"	GND	"	"	"	"							
		122	5.0V	"	"	5.0V	5.0V	"	"	"	"	"	"	"	5.0V	5.0V	5.0V	"	"							
		123	"	"	"	5.0V	GND	"	"	"	"	"	"	"	5.0V	"	"	"	"							
		124	"	"	"	GND	GND	"	"	"	"	"	"	"	5.0V	"	"	"	"							
		125	"	"	"	GND	GND	"	"	"	"	"	"	"	GND	"	"	"	"							
																				Subgroup 9 T_C = 25°C		Subgroup 10 T_C = 125°C		Subgroup 11 T_C = -55°C		
																				Min	Max	Min	Max	Min	Max	
t_{PHL1}	3003 Fig. 4	126		OUT		IN	IN	IN	IN	GND	IN	GND			IN	IN		5.0V	P/S to Q6	20	368	30	490	20	368	ns
		127								"	"	"		OUT			IN	"	P/S to Q7	"	"	"	"	"	"	"
		128	IN		OUT					"	"	"						"	P/S to Q8	"	"	"	"	"	"	"
t_{PLH1}		129		OUT		IN	IN	IN	IN	"	"	"			IN	IN		5.0V	P/S to Q6	"	"	"	"	"	"	"
		130								"	"	"		OUT			IN	"	P/S to Q7	"	"	"	"	"	"	"
		131	IN		OUT					"	"	"						"	P/S to Q8	"	"	"	"	"	"	"
t_{PHL2}		132		OUT						"	GND	IN	IN					"	Clock to Q6	"	"	"	"	"	"	"
		133								"	"	"	"	OUT				"	Clock to Q7	"	"	"	"	"	"	"
		134			OUT					"	"	"	"					"	Clock to Q8	"	"	"	"	"	"	"
t_{PLH2}		135		OUT						"	"	"	"					"	Clock to Q6	"	"	"	"	"	"	"
		136								"	"	"	"	OUT				"	Clock to Q7	"	"	"	"	"	"	"
		137			OUT					"	"	"	"					"	Clock to Q8	"	"	"	"	"	"	"

See footnotes at end of device type 54.

TABLE III. Group A inspection for device type 54 – Continued.

Symbol	MIL-STD-883 method	Cases E,F,N,Z	Terminal conditions and limits 1/																Measured terminal	Test limits						Unit
			PI8	Q6	Q8	PI4	PI3	PI2	PI1	V_{SS}	P/S control	Clock	Serial In	Q7	PI5	PI6	PI7	V_{DD}		Subgroup 9 T_C = 25°C		Subgroup 10 T_C = 125°C		Subgroup 11 T_C = -55°C		
		Test no.	1	2	3	4	5	6	7	8	9	10	11	12	13	14	15	16		Min	Max	Min	Max	Min	Max	
t_{THL}	3004 Fig. 4	138		OUT						GND	GND	IN	IN					5.0V	Q6	13	210	18	280	13	210	ns
		139								"	"	"	"	OUT				"	Q7	"	"	"	"	"	"	"
		140			OUT					"	"	"	"					"	Q8	"	"	"	"	"	"	"
t_{TLH}		141		OUT						"	"	"	"					"	Q6	"	"	"	"	"	"	"
		142								"	"	"	"	OUT				"	Q7	"	"	"	"	"	"	"
		143			OUT					"	"	"	"					"	Q8	"	"	"	"	"	"	"
f_{CL} (max) 11/		144		OUT						"	"	"	"					"	Clock		.75		1.0		.75	µs
		145								"	"	"	"	OUT				"	Clock		"		"		"	µs
		146			OUT					"	"	"	"					"	Clock		"		"		"	µs

1/ Terminals not designated may be "HIGH" level logic, "LOW" level logic, or open except as follows: $V_{IC(pos)}$ tests; the V_{SS} terminal shall be open. $V_{IC(neg)}$ tests; the V_{DD} terminal shall be open. I_{SS} tests; the output terminals shall be open.
2/ The I_{SS} test measurements shall be performed in sequence.
3/ Apply clock pulse; V_{IN} = 0 V dc to V_{DD} until proper state is achieved.
4/ V_{IH} and V_{IL} tests are performed by repeating the truth table tests (numbers 89 through 125) using the input and output conditions as shown below:

Test	V_{DD}	Input		Output	
		H	L	H	L
V_{IH1}				Min	Max
V_{IL1}	5.0V	3.5V	1.5V	4.5V	0.5V
V_{IH2}	10.0V	7.0V	3.0V	9.0V	1.0V
V_{IL2}					
V_{IH3}	15.0V	11.0V	4.0V	13.5V	1.5V
V_{IL3}					

5/ The device manufacturer may, at his option, measure I_{IL} and I_{IH} at 25°C for each individual input or measure all inputs together.
6/ See 4.4.1c.
7/ The truth table test shall be performed in sequence.
8/ Apply clock pulse, V_{IN} = 0 V dc to V_{DD}, t_p = 500 ns (min), t_{THL} = 10 ns ± 10%.
9/ The output voltage limits for each temperature are "H" = V_{DD} –0.5 V min and "L" = V_{SS} +0.5 V max.
10/ The truth table tests shall be performed at V_{IH} and $V_{DD} \leq$ 5 V dc and $\geq$ 18 V dc.
11/ The maximum clock frequency (f_{CL}) requirement is considered met if proper output state changes occur with the pulse repetition period set to that given in the limits column.

TABLE III. Group A inspection for device type 55.

Symbol	MIL-STD-883 method	Cases E,F,N,Z	Terminal conditions and limits 1/																Measured terminal	Test limits						Unit
			Recir In	Clock	NC	NC	NC	Q	$\overline{Q}$	V_{SS}	Delayed clock	Mode cont	NC	NC	NC	NC	Data In	V_{DD}		Subgroup 1 T_C = 25°C		Subgroup 2 T_C = 125°C		Subgroup 3 T_C = -55°C		
		Test no.	1	2	3	4	5	6	7	8	9	10	11	12	13	14	15	16		Min	Max	Min	Max	Min	Max	
V_{IC} (POS)		1	1mA															GND	Recir In		1.5					V
		2		1mA														"	Clock		"					"
		3										1mA						"	Mode Cont		"					"
		4															1mA	"	Data In		"					"
V_{IC} (NEG)		5	-1mA							GND									Recir In		-6					"
		6		-1mA						"									Clock		"					"
		7								"		-1mA							Mode Cont		"					"
		8								"							-1mA		Data In		"					"
I_{SS} 2/	3005	9	GND	3/						"		GND					18.0V	18.0V	None		-2		-20			µA
		10	"	"						"		"					GND	"	"		"		"			"
		11	"	"						"		"					18.0V	"	"		"		"			"
		12	"	"						"		"					GND	"	"		"		"			"
		13	"	"						"		"					18.0V	"	"		"		"			"
		14	"	"						"		"					GND	"	"		"		"			"
		15	"	"						"		"					18.0V	"	"		"		"			"
		16	"	"						"		"					GND	"	"		"		"			"
		17	"	"						"		"					18.0V	"	"		"		"			"
		18	"	"						"		"					GND	"	"		"		"			"
		19	"	"						"		"					18.0V	"	"		"		"			"
		20	"	"						"		"					GND	"	"		"		"			"
		21	"	"						"		"					18.0V	"	"		"		"			"
		22	"	"						"		"					GND	"	"		"		"			"
		23	"	"						"		"					18.0V	"	"		"		"			"
		24	"	"						"		"					GND	"	"		"		"			"
		25	"	"						"		"					18.0V	"	"		"		"			"
		26	"	"						"		"					GND	"	"		"		"			"
		27	"	"						"		"					18.0V	"	"		"		"			"
		28	"	"						"		"					GND	"	"		"		"			"
		29	"	"						"		"					18.0V	"	"		"		"			"
		30	"	"						"		"					GND	"	"		"		"			"
		31	"	"						"		"					18.0V	"	"		"		"			"
		32	"	"						"		"					GND	"	"		"		"			"
		33	"	"						"		"					18.0V	"	"		"		"			"
		34	"	"						"		"					GND	"	"		"		"			"
		35	"	"						"		"					18.0V	"	"		"		"			"
		36	"	"						"		"					GND	"	"		"		"			"
		37	"	"						"		"					18.0V	"	"		"		"			"
		38	"	"						"		"					GND	"	"		"		"			"
		39	"	"						"		"					18.0V	"	"		"		"			"
		40	"	"						"		"					GND	"	"		"		"			"
		41	"	"						"		"					18.0V	"	"		"		"			"
		42	"	"						"		"					GND	"	"		"		"			"
		43	"	"						"		"					18.0V	"	"		"		"			"
		44	"	"						"		"					GND	"	"		"		"			"
		45	"	"						"		"					18.0V	"	"		"		"			"

See footnotes at end of device type 55.

TABLE III. Group A inspection for device type 55 – Continued.

Symbol	MIL-STD-883 method	Cases E,F,N,Z	Terminal conditions and limits 1/																Measured terminal	Test limits						Unit
			Recir In	Clock	NC	NC	NC	Q	$\overline{Q}$	V_{SS}	Delayed clock	Mode cont	NC	NC	NC	NC	Data In	V_{DD}		Subgroup 1 T_C = 25°C		Subgroup 2 T_C = 125°C		Subgroup 3 T_C = -55°C		
		Test no.	1	2	3	4	5	6	7	8	9	10	11	12	13	14	15	16		Min	Max	Min	Max	Min	Max	
I_{SS} 2/	3005	46	GND	3/						GND		GND					GND	18.0V	None		-2		-20			µA
		47	"	"						"		"					18.0V		"		"		"			"
		48	"	"						"		"					GND	"	"		"		"			"
		49	"	"						"		"					18.0V	"	"		"		"			"
		50	"	"						"		"					GND	"	"		"		"			"
		51	"	"						"		"					18.0V	"	"		"		"			"
		52	"	"						"		"					GND	"	"		"		"			"
		53	"	"						"		"					18.0V	"	"		"		"			"
		54	"	"						"		"					GND	"	"		"		"			"
		55	"	"						"		"					18.0V	"	"		"		"			"
		56	"	"						"		"					GND	"	"		"		"			"
		57	"	"						"		"					18.0V	"	"		"		"			"
		58	"	"						"		"					GND	"	"		"		"			"
		59	"	"						"		"					18.0V	"	"		"		"			"
		60	"	"						"		"					GND	"	"		"		"			"
		61	"	"						"		"					18.0V	"	"		"		"			"
		62	"	"						"		"					GND	"	"		"		"			"
		63	GND	3/						GND		GND					18.0V	18.0V	None		-2		-20			µA
		64	"	"						"		"					GND	"	"		"		"			"
		65	"	"						"		"					18.0V	"	"		"		"			"
		66	"	"						"		"					GND	"	"		"		"			"
		67	"	"						"		"					18.0V	"	"		"		"			"
		68	"	"						"		"					GND	"	"		"		"			"
		69	"	"						"		"					18.0V	"	"		"		"			"
		70	"	"						"		"					GND	"	"		"		"			"
		71	"	18.0V						"		"					18.0V	"	V_{SS}		"		"			"
		72	"	GND						"		"					18.0V	"	V_{SS}		"		"			"
		73	"	18.0V						"		"					18.0V	"	None		"		"			"
		74	18.0V	"						"		"					GND	"	V_{SS}		"		"			"
		75	18.0V	"						"		18.0V					GND	"	V_{SS}		"		"			"
		76	GND	"						"		18.0V					18.0V	"	V_{SS}		"		"			"
V_{OH3}	3006	77	GND	4/						"		GND					15.0V	15.0V	$\overline{Q}$	14.95		14.95		14.95		V
		78	GND	4/						"		"					GND	"	$\overline{Q}$	"		"		"		"
		79	GND	15.0V						"		"					15.0V	"	Delayed clock	"		"		"		"
V_{OL3}	3007	80	GND	4/						"		"					GND	"	$\overline{Q}$		0.05		0.05		0.05	"
		81	GND	4/						"		"					15.0V	"	$\overline{Q}$		"		"		"	"
		82	GND	GND						"		"					GND	"	Delayed clock		"		"		"	"
V_{IH1}		83	5/	5/				5/	5/	"	5/	5/					5/	5/	All outputs	5/	5/	5/	5/	5/	5/	5/
V_{IH2}		84	"	"				"	"	"	"	"					"	"	"	"	"	"	"	"	"	"
V_{IH3}		85	"	"				"	"	"	"	"					"	"	"	"	"	"	"	"	"	"
V_{IL1}		86	"	"				"	"	"	"	"					"	"	"	"	"	"	"	"	"	"
V_{IL2}		87	"	"				"	"	"	"	"					"	"	"	"	"	"	"	"	"	"
V_{IL3}		88	"	"				"	"	"	"	"					"	"	"	"	"	"	"	"	"	"
I_{OL1}		89	GND	4/				0.4V		"		GND					GND	5.0V	$\overline{Q}$	0.51		0.36		0.64		mA
		90	"	4/					0.4V	"		"					5.0V	5.0V	$\overline{Q}$	0.51		0.36		0.64		"
		91	"	GND						"	0.4V	"					GND	5.0V	Delayed clock	0.51		0.36		0.64		"
I_{OL2}		92	"	4/				1.5V		"		"					GND	15.0V	$\overline{Q}$	3.4		2.4		4.2		"
		93	"	4/					1.5V	"		"					15.0V	15.0V	$\overline{Q}$	3.4		2.4		4.2		"
		94	"	GND						"	1.5V	"					GND	15.0V	Delayed clock	3.4		2.4		4.2		"

See footnotes at end of device type 55.

TABLE III. Group A inspection for device type 55 – Continued.

Symbol	MIL-STD-883 method	Cases E,F,N,Z	Terminal conditions and limits 1/																Measured terminal	Test limits						Unit
			Recir In	Clock	NC	NC	NC	Q	$\overline{Q}$	V_{SS}	Delayed clock	Mode cont	NC	NC	NC	NC	Data In	V_{DD}		Subgroup 1 T_C = 25°C		Subgroup 2 T_C = 125°C		Subgroup 3 T_C = -55°C		
		Test no.	1	2	3	4	5	6	7	8	9	10	11	12	13	14	15	16		Min	Max	Min	Max	Min	Max	
I_{OH1}		95	GND	4/						GND		GND					5.0V	5.0V	Q	-0.51		-0.36		-0.64		mA
		96	"	4/						"		"					GND	5.0V	$\overline{Q}$	-0.51		-0.36		-0.64		"
		97	"	5.0V						"		"					5.0V	5.0V	Delayed clock	-0.51		-0.36		-0.64		"
I_{OH2}		98	"	4/						"		"					15.0V	15.0V	Q	-3.4		-2.4		-4.2		"
		99	"	4/						"		"					GND	15.0V	$\overline{Q}$	-3.4		-2.4		-4.2		"
		100	"	15.0V						"		"					15.0V	15.0V	Delayed clock	-3.4		-2.4		-4.2		"
I_{IH1} 6/	3010	101	18.0V	18.0V						"		18.0V					18.0V	18.0V	All inputs together		4					nA
I_{IH2}	3010	102	18.0V	GND						GND		GND					GND	18.0V	Recir In		1		45			nA
		103	GND	18.0V						"		GND					GND	"	Clock		"		"			"
		104	"	GND						"		18.0V					GND	"	Mode cont		"		"			"
		105	"	"						"		GND					18.0V	"	Data In		"		"			"
I_{IL1} 6/	3009	106	"	"						"		"					GND	"	All inputs together		-4					"
I_{IL2}		107	"	"						"		"					"	"	Recir In		-1		-45			"
		108	"	"						"		"					"	"	Clock		"		"			"
		109	"	"						"		"					"	"	Mode cont		"		"			"
		110	"	"						"		"					"	"	Data In		"		"			"
																				Subgroup 4 T_C = 25°C						
																				Min	Max					
C_i	3012	111	7/							GND								GND	Recir In		12					pF
		112		7/						"								"	Clock		70					"
		113								"		7/						"	Mode cont		12					"
		114								"							7/	"	Data In		12					"
																				Subgroup 7 T_C = 25°C		Subgroup 8 T_C = 125°C		Subgroup 8 T_C = -55°C		
																				Min	Max	Min	Max	Min	Max	
Truth table test 8/	3014	115	GND	5.0V						GND		GND					5.0V	5.0V	None	See 9/, 10/, 11/						
		116	GND	GND						"		"					5.0V	"	"							
		117	GND	5.0V						"		"					5.0V	"	"							
		118	5.0V	GND						"		"					GND	"	"							
		119	5.0V	5.0V						"		"					GND	"	"							
		120	GND	GND						"		"					5.0V	"	"							
		121	"	5.0V						"		"					"	"	"							
		122	"	GND						"		5.0V					"	"	"							
		123	"	5.0V						"		"					"	"	"							
		124	5.0V	GND						"		"					GND	"	"							
		125	"	5.0V						"		"					GND	"	"							
		126	"	12/						"		GND					5.0V	"	"							
		127	"	5.0V				H	L	"	H	"					"	"	All outputs							
		128	"	GND				H	L	"	L	"					"	"	"							
		129	"	5.0V				L	H	"	H	"					"	"	"							
		130	"	GND				L	H	"	L	"					"	"	"							
		131	"	5.0V				H	L	"	H	"					"	"	"							
		132	"	GND				H	L	"	L	"					"	"	"							
		133	"	5.0V				L	H	"	H	"					"	"	"							
		134	"	GND				L	H	"	L	"					"	"	"							
		135	"	5.0V				H	L	"	H	"					"	"	"							

See footnotes at end of device type 55.

TABLE III. Group A inspection for device type 55 – Continued.

Symbol	MIL-STD-883 method	Cases E,F,N,Z	Terminal conditions and limits 1/																Measured terminal	Test limits						Unit
			Recir In	Clock	NC	NC	NC	Q	$\overline{Q}$	V_{SS}	Delayed clock	Mode cont	NC	NC	NC	NC	Data In	V_{DD}		Subgroup 9 T_C=25°C		Subgroup 10 T_C=125°C		Subgroup 11 T_C=-55°C		
		Test no.	1	2	3	4	5	6	7	8	9	10	11	12	13	14	15	16		Min	Max	Min	Max	Min	Max	
t_{PHL1}	3003 Fig. 4	136	GND	IN				OUT		GND		GND					IN	5.0V	Clock to Q	13	632	18	840	13	632	ns
t_{PHL2}		137	GND	IN					OUT	GND		GND					IN	5.0V	Clock to $\overline{Q}$	"	632	"	840	"	632	ns
t_{PHL3}		138	GND	IN						GND	OUT	GND						5.0V	Clock to Delayed clock	"	263	"	350	"	263	ns
t_{PHL4}	3003 Fig. 4	139	IN	IN				OUT		GND		5.0V						5.0V	Clock to Q	13	632	18	840	13	632	ns
t_{PLH1}		140	GND	"				OUT		"		GND					IN	"	Clock to Q	"	"	"	"	"	"	"
t_{PLH2}		141	GND	"					OUT	"		GND					IN	"	Clock to $\overline{Q}$	"	"	"	"	"	"	"
t_{PLH3}		142	GND	"						"	OUT	GND						"	Clock to Delayed clock	"	263	"	350	"	263	"
t_{PLH4}		143	IN	"				OUT		"		5.0V						"	Clock to Q	"	632	"	840	"	632	"
t_{THL1}	3004 Fig. 4	144	GND	"				OUT		"		GND					IN	"	Q	10	210	14	280	10	210	"
t_{THL2}		145	"	"					OUT	"		"					IN	"	$\overline{Q}$	"	210	"	280	"	210	"
t_{THL3}		146	"	"						"	OUT	"						"	Delayed clock	"	150	"	200	"	150	"
t_{TLH1}		147	"	"				OUT		"		"					IN	"	Q	"	210	"	280	"	210	"
t_{TLH2}		148	"	"					OUT	"		"					IN	"	$\overline{Q}$	"	210	"	280	"	210	"
t_{TLH3}		149	"	"						"	OUT	"						"	Delayed clock	"	150	"	200	"	150	"
f_{CL} (max) 13/		150		"						"	OUT	"							Clock		.94		1.25		.94	µs
		151		"				OUT		"		"					IN	"	"		"		"		"	"
		152		"					OUT	"		"					IN	"	"		"		"		"	"
		153	IN	"				OUT		"		5.0V						"	"		"		"		"	"
		154	IN	"					OUT	"		5.0V						"	"		"		"		"	"

See footnotes on next page.

TABLE III. Group A inspection for device type 55 – Continued.

1/ Terminals not designated may be "HIGH" level logic, "LOW" level logic, or open except as follows: $V_{IC(POS)}$ tests; the V_{SS} terminal shall be open. $V_{IC(NEG)}$ tests; the V_{DD} terminal shall be open. I_{SS} test, the output terminal shall be open.
2/ The I_{SS} tests shall be performed in sequence.
3/ Apply a single clock pulse; V_{IN} = 0 V dc to V_{DD}.
4/ Apply clock pulse: V_{IN} = 0 V dc to V_{DD}, until proper output state is achieved.
5/ V_{IH} and V_{IL} tests are performed by repeating the truth table tests (numbers 115 through 135) using the input and output conditions as follows:

Test	V_{DD}	Input		Output	
		H	L	H	L
V_{IH1} V_{IL1}	5.0V	3.5V	1.5V	4.5V min	0.5V max
V_{IH2} V_{IL2}	10.0V	7.0V	3.0V	9.0V min	1.0V max
V_{IH3} V_{IL3}	15.0V	11.0V	4.0V	13.5V min	1.5V max

6/ The device manufacturer may, at his option, measure I_{IL} and I_{IH} at 25°C for each individual input or measure all inputs together.
7/ See 4.4.1c.
8/ Test numbers 115 through 135 shall be run in sequence.
9/ For all test conditions, delayed clock (C_{LD}) is clock delayed by two inverters.
10/ The output voltage limits for each temperature are "H" = V_{DD} –0.5 V min and "L" = V_{SS} +0.5 V max.
11/ The functional test shall be performed at V_{IH} and $V_{DD} \leq$ 5.0 V dc and $\geq$ 18.0 V dc.
12/ Apply 59 clock pulses: V_{IN} = 0 V dc to V_{DD}, t_p = 500 ns (min) and $t_{TLH} = t_{THL}$ = 10 ns $\pm$ 10%.
13/ The maximum clock frequency (f_{CL}) requirement is considered met if proper output state changes occur with the pulse repetition period set to that given in the limits column.

TABLE III. Group A inspection for device type 56.

Symbol	MIL-STD-883 method	Cases J,K,U Symbol	Terminal conditions and limits 1/																								Measured terminal	Test limits						Unit
			B8	B7	B6	B5	B4	B3	B2	B1	AE	Serial In	A/B	V_{SS}	P/S	A/S	Clock	A1	A2	A3	A4	A5	A6	A7	A8	V_{DD}		Subgroup 1 T_C = 25°C		Subgroup 2 T_C = 125°C		Subgroup 3 T_C = -55°C		
		Test no.	1	2	3	4	5	6	7	8	9	10	11	12	13	14	15	16	17	18	19	20	21	22	23	24		Min	Max	Min	Max	Min	max	
V_{IC} (POS)	2/	1									1mA															5.0V	AE		1.5					V
		2										1mA														"	Ser In		"					"
		3											1mA													"	A/B		"					"
		4													1mA											"	P/S		"					"
		5														1mA										"	A/S		"					"
		6															1mA									"	Clock		"					"
V_{IC} (NEG)		7									-1mA			GND													AE		-6					"
		8										-1mA		"													Ser In		"					"
		9											-1mA	"													A/B		"					"
		10												"	-1mA												P/S		"					"
		11												"		-1mA											A/S		"					"
		12												"			-1mA										Clock		"					"
I_{SS} 3/	3005	13									18.0V	18.0V	18.0V	"	18.0V	18.0V	GND	GND	18.0V	GND	18.0V	GND	18.0V	GND	18.0V	18.0V	V_{SS}		-1.0		-5.0			µA
		14									"	GND	"	"	18.0V	18.0V	18.0V	18.0V	GND	18.0V	GND	18.0V	GND	18.0V	GND	"	V_{SS}		"		"			"
		15									"	"	"	"	18.0V	GND	18.0V	18.0V	GND	18.0V	GND	18.0V	GND	18.0V	GND	"	None		"		"			"
		16									"	"	"	"	GND	GND	18.0V	18.0V	GND	18.0V	GND	18.0V	GND	18.0V	GND	"	V_{SS}		"		"			"
		17									"	"	"	"	GND	18.0V	GND	GND	18.0V	GND	18.0V	GND	18.0V	GND	18.0V	"	V_{SS}		"		"			"
		18									GND	"	"	"	GND	GND	"	"	"	"	"	"	"			"	None		"		"			"
		19									"	"	"	"	18.0V	"	"	"	"	"	"	"	"			"	V_{SS}		"		"			"
		20									"	"	GND	"	GND	"	"	"	"	"	"	"	"			"	V_{SS}		"		"			"
		21									"	"	"	"	GND	"	"	"								"	None		"		"			"
		22	18.0V	GND	18.0V	GND	18.0V	GND	18.0V	GND	18.0V	"	"	"	GND	"	"	"								"	V_{SS}		"		"			"
		23	18.0V	GND	18.0V	GND	18.0V	GND	18.0V	GND	18.0V	"	"	"	18.0V	"	"	"								"	V_{SS}		"		"			"
V_{OH3}	3006	24									15.0V		15.0V	"	15.0V	"	4/									15.0V	B1	14.95		14.95		14.95		V
		25									"		"	"	"	"	"									"	B2	"		"		"		"
		26									"		"	"	"	"	"									"	B3	"		"		"		"
		27									"		"	"	"	"	"									"	B4	"		"		"		"
		28									"		"	"	"	"	"									"	B5	"		"		"		"
		29									"		"	"	"	"	"									"	B6	"		"		"		"
		30									"		"	"	"	"	"									"	B7	"		"		"		"
		31									"		"	"	"	"	"									"	B8	"		"		"		"
		32									"		GND	"	"	"	"									"	A1	"		"		"		"
		33									"		"	"	"	"	"									"	A2	"		"		"		"
		34									"		"	"	"	"	"									"	A3	"		"		"		"
		35									"		"	"	"	"	"									"	A4	"		"		"		"
		36									"		"	"	"	"	"									"	A5	"		"		"		"
		37									"		"	"	"	"	"									"	A6	"		"		"		"
		38									"		"	"	"	"	"									"	A7	"		"		"		"
		39									"		"	"	"	"	"									"	A8	"		"		"		"
		40									"		"	"	GND	"	"									"	A1	"		"		"		"
V_{OL3}	3007	41									15.0V		15.0V	"	15.0V	"	"									"	B1		.05		.05		.05	"
		42									"		"	"	"	"	"									"	B2		"		"		"	"
		43									"		"	"	"	"	"									"	B3		"		"		"	"
		44									"		"	"	"	"	"									"	B4		"		"		"	"
		45									"		"	"	"	"	"									"	B5		"		"		"	"
		46									"		"	"	"	"	"									"	B6		"		"		"	"
		47									"		"	"	"	"	"									"	B7		"		"		"	"
		48									"		"	"	"	"	"									"	B8		"		"		"	"
		49									"		GND	"	"	"	"									"	A1		"		"		"	"
		50									"		"	"	"	"	"									"	A2		"		"		"	"
		51									"		"	"	"	"	"									"	A3		"		"		"	"
		52									"		"	"	"	"	"									"	A4		"		"		"	"
		53									"		"	"	"	"	"									"	A5		"		"		"	"
		54									"		"	"	"	"	"									"	A6		"		"		"	"
		55									"		"	"	"	"	"									"	A7		"		"		"	"
		56									"		"	"	"	"	"									"	A8		"		"		"	"
		57									"		"	"	GND	"	"									"	A1		"		"		"	"

See footnotes at end of device type 56.

TABLE III. Group A inspection for device type 56 – Continued.

Symbol	MIL-STD-883 method	Cases J,K,U	Terminal conditions and limits 1/																								Measured terminal	Test limits						Unit
		Symbol	B8	B7	B6	B5	B4	B3	B2	B1	AE	Serial In	A/B	V_{SS}	P/S	A/S	Clock	A1	A2	A3	A4	A5	A6	A7	A8	V_{DD}		Subgroup 1 T_C = 25°C		Subgroup 2 T_C = 125°C		Subgroup 3 T_C = -55°C		
		Test no.	1	2	3	4	5	6	7	8	9	10	11	12	13	14	15	16	17	18	19	20	21	22	23	24		Min	Max	Min	Max	Min	max	
V_{IH1}		58	5/	5/	5/	5/	5/	5/	5/	5/	5/	5/	5/	GND	5/	5/	5/	5/	5/	5/	5/	5/	5/	5/	5/	5/	All outputs	5/	5/	5/	5/	5/	5/	5/
V_{IH1}		59	“	“	“	“	“	“	“	“	“	“	“	“	“	“	“	“	“	“	“	“	“	“	“	“	“	“	“	“	“	“	“	“
V_{IH3}		60	“	“	“	“	“	“	“	“	“	“	“	“	“	“	“	“	“	“	“	“	“	“	“	“	“	“	“	“	“	“	“	“
V_{IL1}		61	“	“	“	“	“	“	“	“	“	“	“	“	“	“	“	“	“	“	“	“	“	“	“	“	“	“	“	“	“	“	“	“
V_{IL2}		62	“	“	“	“	“	“	“	“	“	“	“	“	“	“	“	“	“	“	“	“	“	“	“	“	“	“	“	“	“	“	“	“
V_{IL3}		63	“	“	“	“	“	“	“	“	“	“	“	“	“	“	“	“	“	“	“	“	“	“	“	“	“	“	“	“	“	“	“	“
I_{OL1}		64								0.4V	5.0V		5.0V	“	5.0V	GND	4/	GND								5.0V	B1	0.51		0.36		0.64		mA
		65							0.4V		“		“	“	“	“	“		GND							“	B2	“		“		“		“
		66						0.4V			“		“	“	“	“	“			GND						“	B3	“		“		“		“
		67					0.4V				“		“	“	“	“	“				GND					“	B4	“		“		“		“
		68				0.4V					“		“	“	“	“	“					GND				“	B5	“		“		“		“
		69			0.4V						“		“	“	“	“	“						GND			“	B6	“		“		“		“
		70		0.4V							“		“	“	“	“	“							GND		“	B7	“		“		“		“
		71	0.4V								“		“	“	“	“	“								GND	“	B8	“		“		“		“
		72								GND	“		GND	“	“	“	“	0.4V								“	A1	“		“		“		“
		73							GND		“		“	“	“	“	“		0.4V							“	A2	“		“		“		“
		74						GND			“		“	“	“	“	“			0.4V						“	A3	“		“		“		“
		75					GND				“		“	“	“	“	“				0.4V					“	A4	“		“		“		“
		76				GND					“		“	“	“	“	“					0.4V				“	A5	“		“		“		“
		77			GND						“		“	“	“	“	“						0.4V			“	A6	“		“		“		“
		78		GND							“		“	“	“	“	“							0.4V		“	A7	“		“		“		“
		79	GND								“		“	“	“	“	“								0.4V	“	A8	“		“		“		“
		80									“	GND	“	“	GND	“	“	0.4V								“	A1	“		“		“		“
I_{OL2}		81								1.5V	15.0V		15.0V	“	15.0V	“	“	GND								15.0V	B1	3.4		2.4		4.2		“
		82							1.5V		“		“	“	“	“	“		GND							“	B2	“		“		“		“
		83						1.5V			“		“	“	“	“	“			GND						“	B3	“		“		“		“
		84					1.5V				“		“	“	“	“	“				GND					“	B4	“		“		“		“
		85				1.5V					“		“	“	“	“	“					GND				“	B5	“		“		“		“
		86			1.5V						“		“	“	“	“	“						GND			“	B6	“		“		“		“
		87		1.5V							“		“	“	“	“	“							GND		“	B7	“		“		“		“
		88	1.5V								“		“	“	“	“	“								GND	“	B8	“		“		“		“
		89								GND	“		GND	“	“	“	“	1.5V								“	A1	“		“		“		“
		90							GND		“		“	“	“	“	“		1.5V							“	A2	“		“		“		“
		91						GND			“		“	“	“	“	“			1.5V						“	A3	“		“		“		“
		92					GND				“		“	“	“	“	“				1.5V					“	A4	“		“		“		“
		93				GND					“		“	“	“	“	“					1.5V				“	A5	“		“		“		“
		94			GND						“		“	“	“	“	“						1.5V			“	A6	“		“		“		“
		95		GND							“		“	“	“	“	“							1.5V		“	A7	“		“		“		“
		96	GND								“		“	“	“	“	“								1.5V	“	A8	“		“		“		“
		97									“	GND	“	“	GND	“	“	1.5V								“	A1	“		“		“		“
I_{OH1}		98								4.6V	5.0V		5.0V	“	5.0V	“	“	5.0V								5.0V	B1	-.51		-.36		-.64		“
		99							4.6V		“		“	“	“	“	“		5.0V							“	B2	“		“		“		“
		100						4.6V			“		“	“	“	“	“			5.0V						“	B3	“		“		“		“
		101					4.6V				“		“	“	“	“	“				5.0V					“	B4	“		“		“		“
		102				4.6V					“		“	“	“	“	“					5.0V				“	B5	“		“		“		“
		103			4.6V						“		“	“	“	“	“						5.0V			“	B6	“		“		“		“
		104		4.6V							“		“	“	“	“	“							5.0V		“	B7	“		“		“		“
		105	4.6V								“		“	“	“	“	“								5.0V	“	B8	“		“		“		“
		106								5.0V	“		GND	“	“	“	“	4.6V								“	A1	“		“		“		“
		107							5.0V		“		“	“	“	“	“		4.6V							“	A2	“		“		“		“
		108						5.0V			“		“	“	“	“	“			4.6V						“	A3	“		“		“		“
		109					5.0V				“		“	“	“	“	“				4.6V					“	A4	“		“		“		“
		110				5.0V					“		“	“	“	“	“					4.6V				“	A5	“		“		“		“
		111			5.0V						“		“	“	“	“	“						4.6V			“	A6	“		“		“		“
		112		5.0V							“		“	“	“	“	“							4.6V		“	A7	“		“		“		“
		113	5.0V								“		“	“	“	“	“								4.6V	“	A8	“		“		“		“
		114									“	5.0V	“	“	GND	“	“	4.6V								“	A1	“		“		“		“

See footnotes at end of device type 56.

TABLE III. Group A inspection for device type 56 – Continued.

Symbol	MIL-STD-883 method	Cases J,K,U	Terminal conditions and limits 1/																									Measured terminal	Test limits						Unit
		Symbol	B8	B7	B6	B5	B4	B3	B2	B1	AE	Serial In	A/B	V_{SS}	P/S	A/S	Clock	A1	A2	A3	A4	A5	A6	A7	A8	V_{DD}		Subgroup 1 T_C = 25°C		Subgroup 2 T_C = 125°C		Subgroup 3 T_C = -55°C		
		Test no.	1	2	3	4	5	6	7	8	9	10	11	12	13	14	15	16	17	18	19	20	21	22	23	24		Min	Max	Min	Max	Min	max	
I_{OH2}		115								13.5V	15.0V		15.0V	GND	15.0V	GND	4/	15.0V								15.0V	B1	-3.4		-2.4		-4.2		mA
		116							13.5V		"		"	"	"	"	"		15.0V							"	B2	"		"		"		"
		117						13.5V			"		"	"	"	"	"			15.0V						"	B3	"		"		"		"
		118					13.5V				"		"	"	"	"	"				15.0V					"	B4	"		"		"		"
		119				13.5V					"		"	"	"	"	"					15.0V				"	B5	"		"		"		"
		120			13.5V						"		"	"	"	"	"						15.0V			"	B6	"		"		"		"
		121		13.5V							"		"	"	"	"	"							15.0V		"	B7	"		"		"		"
		122	13.5V								"		"	"	"	"	"								15.0V	"	B8	"		"		"		"
		123								15.0V	"		GND	"	"	"	"	13.5V								"	A1	"		"		"		"
		124							15.0V		"		"	"	"	"	"		13.5V							"	A2	"		"		"		"
		125						15.0V			"		"	"	"	"	"			13.5V						"	A3	"		"		"		"
		126					15.0V				"		"	"	"	"	"				13.5V					"	A4	"		"		"		"
		127				15.0V					"		"	"	"	"	"					13.5V				"	A5	"		"		"		"
		128			15.0V						"		"	"	"	"	"						13.5V			"	A6	"		"		"		"
		129		15.0V							"		"	"	"	"	"							13.5V		"	A7	"		"		"		"
		130	15.0V								"		"	"	"	"	"								13.5V	"	A8	"		"		"		"
		131									"	15.0V	"	"	GND	"	"	13.5V								"	A1	"		"		"		"
I_{IH1} 6/	3010	132									18.0V	18.0V	18.0V	"	18.0V	18.0V	18.0V	18.0V	18.0V	18.0V	18.0V	18.0V	18.0V	18.0V	18.0V	18.0V	All HIGH level inputs together		14					nA
		133	18.0V	18.0V	18.0V	18.0V	18.0V	18.0V	18.0V	18.0V	GND	18.0V	GND	"	18.0V	18.0V	18.0V									"			12					"
I_{IH2}		134	18.0V	GND	GND	GND	GND	GND	GND	GND	GND	GND	GND	"	GND	GND	GND	GND	GND	GND	GND	GND	GND	GND	GND	18.0V	B8		1.0		45			"
		135	GND	18.0V	GND	GND	"	"	"	"	"	"	"	"	"	"	"	"	"	"	"	"	"	"	"	"	B7		"		"			"
		136	"	GND	18.0V	GND	"	"	"	"	"	"	"	"	"	"	"	"	"	"	"	"	"	"	"	"	B6		"		"			"
		137	"	"	GND	18.0V	"	"	"	"	"	"	"	"	"	"	"	"	"	"	"	"	"	"	"	"	B5		"		"			"
		138	"	"	"	GND	18.0V	"	"	"	"	"	"	"	"	"	"	"	"	"	"	"	"	"	"	"	B4		"		"			"
		139	"	"	"	"	GND	18.0V	"	"	"	"	"	"	"	"	"	"	"	"	"	"	"	"	"	"	B3		"		"			"
		140	"	"	"	"	"	GND	18.0V	"	"	"	"	"	"	"	"	"	"	"	"	"	"	"	"	"	B2		"		"			"
		141	"	"	"	"	"	"	GND	18.0V	"	"	"	"	"	"	"	"	"	"	"	"	"	"	"	"	B1		"		"			"
		142	"	"	"	"	"	"	"	GND	18.0V	"	"	"	"	"	"	"	"	"	"	"	"	"	"	"	AE		"		"			"
		143	"	"	"	"	"	"	"	"	GND	18.0V	"	"	"	"	"	"	"	"	"	"	"	"	"	"	Serial In		"		"			"
		144	"	"	"	"	"	"	"	"	"	GND	18.0V	"	"	"	"	"	"	"	"	"	"	"	"	"	A/B		"		"			"
		145	"	"	"	"	"	"	"	"	"	"	GND	"	18.0V	"	"	"	"	"	"	"	"	"	"	"	P/S		"		"			"
		146	"	"	"	"	"	"	"	"	"	"	"	"	GND	18.0V	"	"	"	"	"	"	"	"	"	"	A/S		"		"			"
		147	"	"	"	"	"	"	"	"	"	"	"	"	"	GND	18.0V	"	"	"	"	"	"	"	"	"	Clock		"		"			"
		148	"	"	"	"	"	"	"	"	"	"	"	"	"	"	GND	18.0V	"	"	"	"	"	"	"	"	A1		"		"			"
		149	"	"	"	"	"	"	"	"	"	"	"	"	"	"	"	GND	18.0V	"	"	"	"	"	"	"	A2		"		"			"
		150	"	"	"	"	"	"	"	"	"	"	"	"	"	"	"	"	GND	18.0V	"	"	"	"	"	"	A3		"		"			"
		151	"	"	"	"	"	"	"	"	"	"	"	"	"	"	"	"	"	GND	18.0V	"	"	"	"	"	A4		"		"			"
		152	"	"	"	"	"	"	"	"	"	"	"	"	"	"	"	"	"	"	GND	18.0V	"	"	"	"	A5		"		"			"
		153	"	"	"	"	"	"	"	"	"	"	"	"	"	"	"	"	"	"	"	GND	18.0V	"	"	"	A6		"		"			"
		154	"	"	"	"	"	"	"	"	"	"	"	"	"	"	"	"	"	"	"	"	GND	18.0V	"	"	A7		"		"			"
		155	"	"	"	"	"	"	"	"	"	"	"	"	"	"	"	"	"	"	"	"	"	GND	18.0V	"	A8		"		"			"
I_{IL1} 6/	3009	156	"	"	"	"	"	"	"	"	"	"	"	"	"	"	"	"	"	"	"	"	"	"	GND	"	All inputs together		-22						"
I_{IL2}		157	"	"	"	"	"	"	"	"	"	"	"	"	"	"	"	"	"	"	"	"	"	"	"	"	B8		-1.0		-45				"
		158	"	"	"	"	"	"	"	"	"	"	"	"	"	"	"	"	"	"	"	"	"	"	"	"	B7		"		"				"
		159	"	"	"	"	"	"	"	"	"	"	"	"	"	"	"	"	"	"	"	"	"	"	"	"	B6		"		"				"
		160	"	"	"	"	"	"	"	"	"	"	"	"	"	"	"	"	"	"	"	"	"	"	"	"	B5		"		"				"
		161	"	"	"	"	"	"	"	"	"	"	"	"	"	"	"	"	"	"	"	"	"	"	"	"	B4		"		"				"
		162	"	"	"	"	"	"	"	"	"	"	"	"	"	"	"	"	"	"	"	"	"	"	"	"	B3		"		"				"
		163	"	"	"	"	"	"	"	"	"	"	"	"	"	"	"	"	"	"	"	"	"	"	"	"	B2		"		"				"
		164	"	"	"	"	"	"	"	"	"	"	"	"	"	"	"	"	"	"	"	"	"	"	"	"	B1		"		"				"
		165	"	"	"	"	"	"	"	"	"	"	"	"	"	"	"	"	"	"	"	"	"	"	"	"	AE		"		"				"
		166	"	"	"	"	"	"	"	"	"	"	"	"	"	"	"	"	"	"	"	"	"	"	"	"	Serial In		"		"				"
		167	"	"	"	"	"	"	"	"	"	"	"	"	"	"	"	"	"	"	"	"	"	"	"	"	A/B		"		"				"
		168	"	"	"	"	"	"	"	"	"	"	"	"	"	"	"	"	"	"	"	"	"	"	"	"	P/S		"		"				"

See footnotes at end of device type 56.

TABLE III. Group A inspection for device type 56 – Continued.

Symbol	MIL-STD-883 method	Cases J,K,U	Terminal conditions and limits 1/																								Measured terminal	Test limits						Unit
		Symbol	B8	B7	B6	B5	B4	B3	B2	B1	AE	Serial In	A/B	V_{SS}	P/S	A/S	Clock	A1	A2	A3	A4	A5	A6	A7	A8	V_{DD}		Subgroup 1 T_C = 25°C		Subgroup 2 T_C = 125°C		Subgroup 3 T_C = -55°C		
		Test no.	1	2	3	4	5	6	7	8	9	10	11	12	13	14	15	16	17	18	19	20	21	22	23	24		Min	Max	Min	Max	Min	max	
I_{IL2}	3009	169	GND	GND	GND	GND	GND	GND	GND	GND	GND	GND	GND	GND	GND	GND	GND	GND	GND	GND	GND	GND	GND	GND	GND	18.0V	A/S		-1.0		-45			nA
		170	"	"	"	"	"	"	"	"	"	"	"	"	"	"	"	"	"	"	"	"	"	"	"	"	"	Clock		"		"			"
		171	"	"	"	"	"	"	"	"	"	"	"	"	"	"	"	"	"	"	"	"	"	"	"	"	A1		"		"			"
		172	"	"	"	"	"	"	"	"	"	"	"	"	"	"	"	"	"	"	"	"	"	"	"	"	A2		"		"			"
		173	"	"	"	"	"	"	"	"	"	"	"	"	"	"	"	"	"	"	"	"	"	"	"	"	A3		"		"			"
		174	"	"	"	"	"	"	"	"	"	"	"	"	"	"	"	"	"	"	"	"	"	"	"	"	A4		"		"			"
		175	"	"	"	"	"	"	"	"	"	"	"	"	"	"	"	"	"	"	"	"	"	"	"	"	A5		"		"			"
		176	"	"	"	"	"	"	"	"	"	"	"	"	"	"	"	"	"	"	"	"	"	"	"	"	A6		"		"			"
		177	"	"	"	"	"	"	"	"	"	"	"	"	"	"	"	"	"	"	"	"	"	"	"	"	A7		"		"			"
		178	"	"	"	"	"	"	"	"	"	"	"	"	"	"	"	"	"	"	"	"	"	"	"	"	A8		"		"			"
																												Subgroup 4 T_C = 25°C						
																												Min	Max					
C_i	3012	179									7/			GND												GND	AE		12					pF
		180										7/		"												"	Serial In		"					"
		181											7/	"												"	A/B		"					"
		182												"	7/											"	P/S		"					"
		183												"		7/										"	A/S		"					"
		184												"			7/									"	Clock		"					"
																												Subgroup 7 T_C = 25°C		Subgroup 8 T_C = 125°C		Subgroup 8 T_C = -55°C		
																												Min	Max	Min	Max	Min	Max	
Truth table test 8/	3014	185									5.0V	GND	5.0V	GND	5.0V	GND	GND	5.0V	GND	5.0V	GND	5.0V	GND	5.0V	GND	5.0V	All outputs	See 8/, 9/						
		186	L	H	L	H	L	H	L	H	5.0V	"	"	"	5.0V	"	5.0V	"	"	"	"	"	"	"	"	"	"								
		187	"	"	"	"	"	"	"	"	GND	"	"	"	GND	"	5.0V	"	"	"	"	"	"	"	"	"	"								
		188	"	"	"	"	"	"	"	"	5.0V	"	"	"	"	"	5.0V	"	"	"	"	"	"	"	"	"	"								
		189	"	"	"	"	"	"	"	"	"	"	"	"	"	"	GND	"	"	"	"	"	"	"	"	"	"								
		190	H	L	H	L	H	L	H	L	"	"	"	"	"	"	5.0V	"	"	"	"	"	"	"	"	"	"								
		191	"	"	"	"	"	"	"	"	"	"	"	"	5.0V	"	5.0V	"	"	"	"	"	"	"	"	"	"								
		192	"	"	"	"	"	"	"	"	"	5.0V	"	"	GND	"	5.0V	GND	5.0V	GND	5.0V	GND	5.0V	GND	5.0V	"	"								
		193	"	"	"	"	"	"	"	"	"	"	"	"	GND	"	GND	"	"	"	"	"	"	"	"	"	"								
		194	L	H	L	H	L	H	L	H	"	"	"	"	GND	"	"	"	"	"	"	"	"	"	"	"	"								
		195	H	L	H	L	H	L	H	L	"	"	"	"	5.0V	5.0V	"	"	"	"	"	"	"	"	"	"	"								
		196	L	H	L	H	L	H	L	H	"	GND	"	"	"	"	"	5.0V	GND	5.0V	GND	5.0V	GND	5.0V	GND	"	"								
		197	L	H	L	H	L	H	L	H	GND	GND	"	"	"	"	"	5.0V	GND	5.0V	GND	5.0V	GND	5.0V	GND	"	"								
		198	L	H	L	H	L	H	L	H			"	"	"	"	5.0V	GND	5.0V	GND	5.0V	GND	5.0V	GND	5.0V	"	"								
		199									GND	GND	5.0V	"	GND	"	GND									"	"								
		200	GND	5.0V	GND	5.0V	GND	5.0V	GND	5.0V	GND	GND	GND	"	5.0V	"	"	H	L	H	L	H	L	H	L	"	"								
		201	5.0V	GND	5.0V	GND	5.0V	GND	5.0V	GND	5.0V	GND	"	"	"	"	"	L	H	L	H	L	H	L	H	"	"								
		202	5.0V	GND	5.0V	GND	5.0V	GND	5.0V	GND	"	5.0V	"	"	"	GND	"	"	"	"	"	"	"	"	"	"	"								
		203	GND	5.0V	GND	5.0V	GND	5.0V	GND	5.0V	"	"	"	"	"	GND	"	"	"	"	"	"	"	"	"	"	"								
		204	"	"	"	"	"	"	"	"	"	"	"	"	GND	GND	"	"	"	"	"	"	"	"	"	"	"								
		205	"	"	"	"	"	"	"	"	"	"	"	"	GND	5.0V	"	"	"	"	"	"	"	"	"	"	"								
		206	"	"	"	"	"	"	"	"	"	"	"	"	5.0V	GND	"	H	L	H	L	H	L	H	L	"	"								
		207	"	"	"	"	"	"	"	"	"	"	"	"	"	"	"	H	L	H	L	H	L	H	L	"	"								
		208	5.0V	GND	5.0V	GND	5.0V	GND	5.0V	GND	"	"	"	"	"	"	"	H	L	H	L	H	L	H	L	"	"								
		209	"	"	"	"	"	"	"	"	"	"	"	"	"	"	5.0V	L	H	L	H	L	H	L	H	"	"								
		210	"	"	"	"	"	"	"	"	"	"	"	"	GND	"	GND	L	H	L	H	L	H	L	H	"	"								
		211	"	"	"	"	"	"	"	"	"	"	"	"	GND	"	5.0V	H	L	H	L	H	L	H	L	"	"								
																												Subgroup 9 T_C = 25°C		Subgroup 10 T_C = 125°C		Subgroup 11 T_C = -55°C		
																												Min	Max	Min	Max	Min	Max	
t_{PHL1}	3003 Fig. 4	212								OUT	5.0V		5.0V	GND	5.0V	GND	IN	IN								5.0V	Clock to B1	13	737	18	980	13	737	ns
		213							OUT		"		"	"	"	"	"		IN							"	Clock to B2	"	"	"	"	"	"	"
		214						OUT			"		"	"	"	"	"			IN						"	Clock to B3	"	"	"	"	"	"	"
		215					OUT				"		"	"	"	"	"				IN					"	Clock to B4	"	"	"	"	"	"	"

See footnotes at end of device type 56.

TABLE III. Group A inspection for device type 56 – Continued.

Symbol	MIL-STD-883 method	Cases J,K,U Symbol	Terminal conditions and limits 1/ B8	B7	B6	B5	B4	B3	B2	B1	AE	Serial In	A/B	V_{SS}	P/S	A/S	Clock	A1	A2	A3	A4	A5	A6	A7	A8	V_{DD}	Measured terminal	Test limits Subgroup 9 T_C = 25°C Min	Subgroup 9 Max	Subgroup 10 T_C = 125°C Min	Subgroup 10 Max	Subgroup 11 T_C = -55°C Min	Subgroup 11 max	Unit
		Test no.	1	2	3	4	5	6	7	8	9	10	11	12	13	14	15	16	17	18	19	20	21	22	23	24								
t_{PHL1}	3003 Fig. 4	216				OUT					5.0V		5.0V	GND	5.0V	GND	IN					IN				5.0V	Clock to B5	13	737	18	980	13	737	ns
		217			OUT						"		"	"	"	"	"						IN			"	Clock to B6	"	"	"	"	"	"	"
		218		OUT							"		"	"	"	"	"							IN		"	Clock to B7	"	"	"	"	"	"	"
		219	OUT								"		"	"	"	"	"								IN	"	Clock to B8	"	"	"	"	"	"	"
t_{PLH1}		220								OUT	"		GND	"	"	"	"	IN								"	Clock to B1	"	"	"	"	"	"	"
		221							OUT		"		"	"	"	"	"		IN							"	Clock to B2	"	"	"	"	"	"	"
		222						OUT			"		"	"	"	"	"			IN						"	Clock to B3	"	"	"	"	"	"	"
		223					OUT				"		"	"	"	"	"				IN					"	Clock to B4	"	"	"	"	"	"	"
		224				OUT					"		"	"	"	"	"					IN				"	Clock to B5	"	"	"	"	"	"	"
		225			OUT						"		"	"	"	"	"						IN			"	Clock to B6	"	"	"	"	"	"	"
		226		OUT							"		"	"	"	"	"							IN		"	Clock to B7	"	"	"	"	"	"	"
		227	OUT								"		"	"	"	"	"								IN	"	Clock to B8	"	"	"	"	"	"	"
t_{PHL2}		228								OUT	"		"	"	"	"	"	IN								"	Clock to B1	"	"	"	"	"	"	"
		229							OUT		"		"	"	"	"	"		IN							"	Clock to B2	"	"	"	"	"	"	"
		230						OUT			"		"	"	"	"	"			IN						"	Clock to B3	"	"	"	"	"	"	"
		231					OUT				"		"	"	"	"	"				IN					"	Clock to B4	"	"	"	"	"	"	"
		232				OUT					"		"	"	"	"	"					IN				"	Clock to B5	"	"	"	"	"	"	"
		233			OUT						"		"	"	"	"	"						IN			"	Clock to B6	"	"	"	"	"	"	"
		234		OUT							"		"	"	"	"	"							IN		"	Clock to B7	"	"	"	"	"	"	"
		235	OUT								"		"	"	"	"	"								IN	"	Clock to B8	"	"	"	"	"	"	"
t_{PLH2}		236								IN	"		"	"	"	"	"	OUT								"	Clock to A1	"	"	"	"	"	"	"
		237							IN		"		"	"	"	"	"		OUT							"	Clock to A2	"	"	"	"	"	"	"
		238						IN			"		"	"	"	"	"			OUT						"	Clock to A3	"	"	"	"	"	"	"
		239					IN				"		"	"	"	"	"				OUT					"	Clock to A4	"	"	"	"	"	"	"
		240				IN					"		"	"	"	"	"					OUT				"	Clock to A5	"	"	"	"	"	"	"
		241			IN						"		"	"	"	"	"						OUT			"	Clock to A6	"	"	"	"	"	"	"
		242		IN							"		"	"	"	"	"							OUT		"	Clock to A7	"	"	"	"	"	"	"
		243	IN								"		"	"	"	"	"								OUT	"	Clock to A8	"	"	"	"	"	"	"
t_{PHL3}	3003 Fig. 4	244								OUT	5.0V	IN	5.0V	GND	GND	GND	IN									5.0V	Clock to B1	13	737	18	980	13	737	ns
		245							OUT		"	"	"	"	"	"	"									"	Clock to B2	"	"	"	"	"	"	"
		246						OUT			"	"	"	"	"	"	"									"	Clock to B3	"	"	"	"	"	"	"
		247					OUT				"	"	"	"	"	"	"									"	Clock to B4	"	"	"	"	"	"	"
		248				OUT					"	"	"	"	"	"	"									"	Clock to B5	"	"	"	"	"	"	"
		249			OUT						"	"	"	"	"	"	"									"	Clock to B6	"	"	"	"	"	"	"
		250		OUT							"	"	"	"	"	"	"									"	Clock to B7	"	"	"	"	"	"	"
		251	OUT								"	"	"	"	"	"	"									"	Clock to B8	"	"	"	"	"	"	"
t_{PLH3}		252								OUT	"	"	"	"	"	"	"									"	Clock to B1	"	"	"	"	"	"	"
		253							OUT		"	"	"	"	"	"	"									"	Clock to B2	"	"	"	"	"	"	"
		254						OUT			"	"	"	"	"	"	"									"	Clock to B3	"	"	"	"	"	"	"
		255					OUT				"	"	"	"	"	"	"									"	Clock to B4	"	"	"	"	"	"	"
		256				OUT					"	"	"	"	"	"	"									"	Clock to B5	"	"	"	"	"	"	"
		257			OUT						"	"	"	"	"	"	"									"	Clock to B6	"	"	"	"	"	"	"
		258		OUT							"	"	"	"	"	"	"									"	Clock to B7	"	"	"	"	"	"	"
		259	OUT								"	"	"	"	"	"	"									"	Clock to B8	"	"	"	"	"	"	"
t_{PHL4}		260									"	"	GND	"	"	"	"	OUT								"	Clock to A1	"	"	"	"	"	"	"
		261									"	"	"	"	"	"	"		OUT							"	Clock to A2	"	"	"	"	"	"	"
		262									"	"	"	"	"	"	"			OUT						"	Clock to A3	"	"	"	"	"	"	"
		263									"	"	"	"	"	"	"				OUT					"	Clock to A4	"	"	"	"	"	"	"
		264									"	"	"	"	"	"	"					OUT				"	Clock to A5	"	"	"	"	"	"	"
		265									"	"	"	"	"	"	"						OUT			"	Clock to A6	"	"	"	"	"	"	"
		266									"	"	"	"	"	"	"							OUT		"	Clock to A7	"	"	"	"	"	"	"
		267									"	"	"	"	"	"	"								OUT	"	Clock to A8	"	"	"	"	"	"	"
t_{PLH4}		268									"	"	"	"	"	"	"	OUT								"	Clock to A1	"	"	"	"	"	"	"
		269									"	"	"	"	"	"	"		OUT							"	Clock to A2	"	"	"	"	"	"	"
		270									"	"	"	"	"	"	"			OUT						"	Clock to A3	"	"	"	"	"	"	"
		271									"	"	"	"	"	"	"				OUT					"	Clock to A4	"	"	"	"	"	"	"
		272									"	"	"	"	"	"	"					OUT				"	Clock to A5	"	"	"	"	"	"	"
		273									"	"	"	"	"	"	"						OUT			"	Clock to A6	"	"	"	"	"	"	"
		274									"	"	"	"	"	"	"							OUT		"	Clock to A7	"	"	"	"	"	"	"
		275									"	"	"	"	"	"	"								OUT	"	Clock to A8	"	"	"	"	"	"	"

See footnotes at end of device type 56.

TABLE III. Group A inspection for device type 56 – Continued.

Symbol	MIL-STD-883 method	Cases J,K,U	Terminal conditions and limits 1/																								Measured terminal	Test limits						Unit
		Symbol	B8	B7	B6	B5	B4	B3	B2	B1	AE	Serial In	A/B	V_{SS}	P/S	A/S	Clock	A1	A2	A3	A4	A5	A6	A7	A8	V_{DD}		Subgroup 9 T_C = 25°C		Subgroup 10 T_C = 125°C		Subgroup 11 T_C = -55°C		
		Test no.	1	2	3	4	5	6	7	8	9	10	11	12	13	14	15	16	17	18	19	20	21	22	23	24		Min	Max	Min	Max	Min	max	
t_{THL1}	3004 Fig. 4	276								OUT	5.0V		5.0V	GND	5.0V	GND	IN	IN								5.0V	B1	10	210	14	280	10	210	ns
		277							OUT		"		"	"	"	"	"		IN							"	B2	"	"	"	"	"	"	"
		278						OUT			"		"	"	"	"	"			IN						"	B3	"	"	"	"	"	"	"
		279					OUT				"		"	"	"	"	"				IN					"	B4	"	"	"	"	"	"	"
		280				OUT					"		"	"	"	"	"					IN				"	B5	"	"	"	"	"	"	"
		281			OUT						"		"	"	"	"	"						IN			"	B6	"	"	"	"	"	"	"
		282		OUT							"		"	"	"	"	"							IN		"	B7	"	"	"	"	"	"	"
		283	OUT								"		"	"	"	"	"								IN	"	B8	"	"	"	"	"	"	"
t_{TLH1}		284								OUT	"		"	"	"	"	"	IN								"	B1	"	"	"	"	"	"	"
		285							OUT		"		"	"	"	"	"		IN							"	B2	"	"	"	"	"	"	"
		286						OUT			"		"	"	"	"	"			IN						"	B3	"	"	"	"	"	"	"
		287					OUT				"		"	"	"	"	"				IN					"	B4	"	"	"	"	"	"	"
		288				OUT					"		"	"	"	"	"					IN				"	B5	"	"	"	"	"	"	"
		289			OUT						"		"	"	"	"	"						IN			"	B6	"	"	"	"	"	"	"
		290		OUT							"		"	"	"	"	"							IN		"	B7	"	"	"	"	"	"	"
		291	OUT								"		"	"	"	"	"								IN	"	B8	"	"	"	"	"	"	"
t_{THL2}		292								IN	"		GND	"	"	"	"	OUT								"	A1	"	"	"	"	"	"	"
		293							IN		"		"	"	"	"	"		OUT							"	A2	"	"	"	"	"	"	"
		294						IN			"		"	"	"	"	"			OUT						"	A3	"	"	"	"	"	"	"
		295					IN				"		"	"	"	"	"				OUT					"	A4	"	"	"	"	"	"	"
		296				IN					"		"	"	"	"	"					OUT				"	A5	"	"	"	"	"	"	"
		297			IN						"		"	"	"	"	"						OUT			"	A6	"	"	"	"	"	"	"
		298		IN							"		"	"	"	"	"							OUT		"	A7	"	"	"	"	"	"	"
		299	IN								"		"	"	"	"	"								OUT	"	A8	"	"	"	"	"	"	"
t_{TLH2}		300								IN	"		"	"	"	"	"	OUT								"	A1	"	"	"	"	"	"	"
		301							IN		"		"	"	"	"	"		OUT							"	A2	"	"	"	"	"	"	"
		302						IN			"		"	"	"	"	"			OUT						"	A3	"	"	"	"	"	"	"
		303					IN				"		"	"	"	"	"				OUT					"	A4	"	"	"	"	"	"	"
		304				IN					"		"	"	"	"	"					OUT				"	A5	"	"	"	"	"	"	"
		305			IN						"		"	"	"	"	"						OUT			"	A6	"	"	"	"	"	"	"
		306		IN							"		"	"	"	"	"							OUT		"	A7	"	"	"	"	"	"	"
		307	IN								"		"	"	"	"	"								OUT	"	A8	"	"	"	"	"	"	"
f_{CL} (max) 10/		308									"	IN	"	"	GND	"	"	OUT								"	Clock		1.0		1.3		1.0	µs
		309									"	"	"	"	"	"	"		OUT							"	"		"		"		"	"
		310									"	"	"	"	"	"	"			OUT						"	"		"		"		"	"
		311									"	"	"	"	"	"	"				OUT					"	"		"		"		"	"
		312									"	"	"	"	"	"	"					OUT				"	"		"		"		"	"
		313									"	"	"	"	"	"	"						OUT			"	"		"		"		"	"
		314									"	"	"	"	"	"	"							OUT		"	"		"		"		"	"
		315									"	"	"	"	"	"	"								OUT	"	"		"		"		"	"
		316								OUT	"	"	5.0V	"	"	"	"									"	"		"		"		"	"
		317							OUT		"	"	"	"	"	"	"									"	"		"		"		"	"
		318						OUT			"	"	"	"	"	"	"									"	"		"		"		"	"
		319					OUT				"	"	"	"	"	"	"									"	"		"		"		"	"
		320				OUT					"	"	"	"	"	"	"									"	"		"		"		"	"
		321			OUT						"	"	"	"	"	"	"									"	"		"		"		"	"
		322		OUT							"	"	"	"	"	"	"									"	"		"		"		"	"
		323	OUT								"	"	"	"	"	"	"									"	"		"		"		"	"

See footnotes on next page.

TABLE III. Group A inspection for device type 56 – Continued.

1/ Pins not designated may be "HIGH" level logic, "LOW" level logic, or open. Exceptions are as follows: $V_{IC(POS)}$ tests, the V_{SS} terminal shall be open; $V_{IC(NEG)}$ tests, the V_{DD} terminal shall be open; I_{SS} tests, the output terminals shall be open; I_{IH1} tests, the undesignated terminals shall be open.

2/ In device type 56, circuit B, all terminals except 12 and 14, are inputs connected to gate structures; therefore, the table III, $V_{IC(POS)}$ and $V_{IC(NEG)}$ tests shall be expanded to include testing terminals 1 through 8 and 16 through 23.

3/ The I_{SS} test measurements shall be performed in sequence.

4/ Apply clock pulse V_{IN} = 0 V dc to V_{DD} until proper output state is achieved.

5/ V_{IH} and V_{IL} tests are performed by repeating the truth table tests (numbers 185 through 211) using the input and output conditions as follows:

Test	V_{DD}	Input		Output	
		H	L	H	L
V_{IH1} V_{IL1}	5.0V	3.5V	1.5V	4.5V min	0.5V max
V_{IH2} V_{IL2}	10.0V	7.0V	3.0V	9.0V min	1.0V max
V_{IH3} V_{IL3}	15.0V	11.0V	4.0V	13.5V min	1.5V max

6/ The device manufacturer may, at his option, measure I_{IL} and I_{IH} at 25°C for individual input or measure all inputs together.

7/ See 4.4.1c.

8/ The truth table tests shall be performed in sequence.

9/ The truth table test shall be performed at V_{IH} and $V_{DD} \leq 5$ V dc and ≥ 18 V dc. L = V_{SS} +0.50 V dc maximum and H = V_{DD} –0.5 V dc minimum.

10/ The maximum clock frequency (f_{CL}) requirements are considered met if proper output state changes occur with the pulse repetition period set to that given in the limits column.

4.4.4 Group D inspection. Group D inspection shall be in accordance with table V of MIL-PRF-38535. End-point electrical parameters shall be as specified in table II herein.

4.4.5 Group E inspection. Group E inspection is required only for parts intended to be marked as radiation hardness assured (see 3.7 herein). RHA levels for device classes B and S shall be as specified in MIL-PRF-38535 and 4.5.4 herein.

4.5 Methods of inspection. Methods of inspection shall be specified and as follows:

4.5.1 Voltage and current. Unless otherwise specified, all voltages given are referenced to the microcircuit V_{SS} terminal. Currents given are conventional current and positive when flowing into the referenced terminal.

4.5.2 Burn-in and life test cool down procedures. When the burn-in and life tests are completed and prior to removal of bias voltages, the devices under test (DUT) shall be cooled to a temperature of 25°C ±3°C; then, electrical parameter end-point measurements shall be performed.

TABLE IV. Delta limits at 25°C.

Parameter 1/	Device types					
	01	02	03	04	05	06
I_{SS}	±60 nA	±100 nA	±100 nA	±100 nA	±400 nA	±100 nA
V_{OL1}	±0.04 V	±0.04 V	±0.04 V	±0.04 V	±0.04 V	±0.04 V
V_{OH1}	±0.08 V	±0.08 V	±0.08 V	±0.08 V	±0.08 V	±0.08 V

Parameter 1/	Device types					
	51	52	53	54	55	56
I_{SS}	±60 nA	±100 nA	±100 nA	±100 nA	±400 nA	±100 nA
I_{OL1}	±15%	±15%	±15%	±15%	±15%	±15%
I_{OH1}	±15%	±15%	±15%	±15%	±15%	±15%

1/ Each of the above parameters shall be recorded before and after the required burn-in and life tests to determine delta (Δ).

4.5.3 Quiescent supply current (I_{SS} test). When performing quiescent supply current measurements (I_{SS}), the meter shall be placed so that all currents flow through the meter.

4.5.4 Radiation hardness assurance (RHA) testing. The RHA testing shall be performed in accordance with test procedures and sampling specified in MIL-PRF-38535 and herein.

a. Before irradiation, selected samples shall be assembled in qualified packages and pass the governing electrical parameters (group A subgroup 1 at 25°C) and also be subjected to the threshold-voltage test in table VII in order to calculate the delta threshold (ΔV_T) after irradiation.

b. The devices shall be subjected to a total radiation dose as specified in MIL-PRF-38535 for the radiation hardness assurance level being tested, and meet the end-point electrical parameters as defined in table V at 25°C, after exposure. The start and completion of the end-point electrical parameter measurements shall not exceed 2 hours following irradiation.

c. Threshold-voltage test circuit conditions shall be as specified in table VII and on figure 5. In situ and remote testing, the tests shall be performed with the devices biased in accordance with table VI and the bias may be interrupted for up to 1 minute to remove devices to the remote bias fixture.

d. After irradiation, the devices shall pass the truth table test as specified in subgroup 7 in table III or if subgroup 7 is not required, then an equivalent truth table test shall be performed.

TABLE V. Radiation hardened end-point electrical parameters at 25°C.

Parameter	Test limits (All device types)	V_{DD}	
		Device types	
		01-06	51-56
V_{TN}	0.3 V min	10 V	10 V
V_{TP}	2.8 V max	10 V	10 V
ΔV_T	1.4 V max	10 V	10 V
I_{SS}	100 x max limit	15 V	18 V
t_{PLH}	1.35 x max limit	5 V	5 V
t_{PHL}	1.35 x max limit	5 V	5 V

TABLE VI. Bias during exposure to radiation.

Device type	Pin connections 1/		
	V_{DD} = 10 V dc (through a 30 kΩ to 60 kΩ resistor)	V_{SS} = GND	V_{DD} = 10 V dc
01, 51	1, 3, 4, 5, 6	7	14
02, 52	1, 4, 5, 6, 7, 9, 10, 11, 13, 14, 15	8	16
03, 53	1, 6, 7, 9, 14, 15	8	16
04, 54	1, 4, 5, 6, 7, 9, 10, 11, 13, 14, 15	8	16
05, 55	1, 2, 10, 15	8	16
06, 56	9, 10, 11, 13, 14, 15	12	24

1/ Pins not designated are open or tied to 10 V dc through a 30 kΩ to 60 kΩ resistor.

5. PACKAGING

5.1 Packaging. For acquisition purposes, the packaging requirements are as specified in the contract or order (see 6.2). When actual packaging of materiel is to be performed by DoD or in-house contractor personnel, these personnel need to contact the responsible packaging activity to ascertain packaging requirements. Packaging requirements are maintained by the Inventory Control Point's packaging activity within the Military Service or Defense Agency, or within the military service's system commands. Packaging data retrieval is available from the managing Military Department's or Defense Agency's automated packaging files, CD-ROM products, or by contacting the responsible packaging activity.

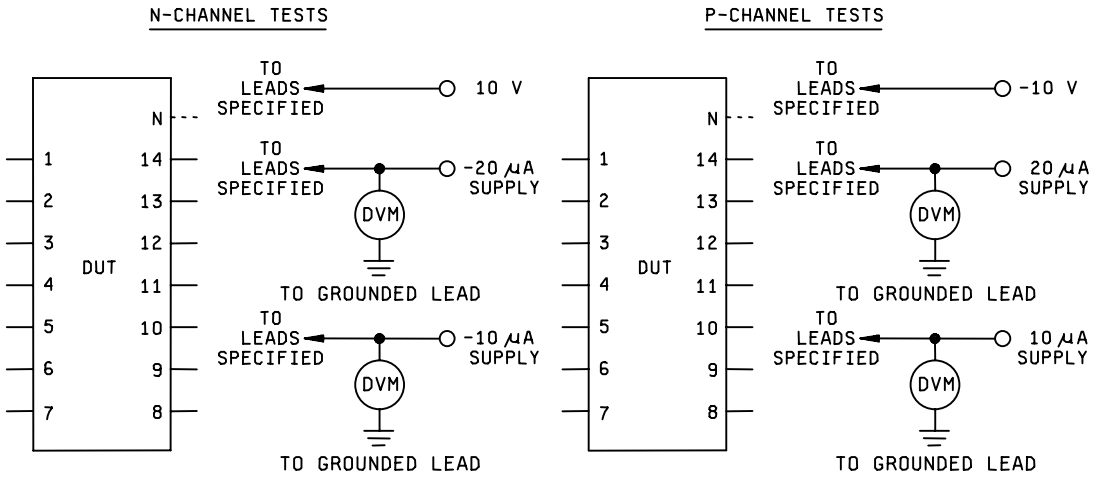

FIGURE 5. Threshold-voltage test circuit.

TABLE VII. Threshold-voltage test circuit conditions.

Device	GND	10 V	V_{TN} measured at		GND	-10 V	V_{TP} measured at	
			-20 µA supply	-10 µA supply			20 µA supply	10 µA supply
01, 51	3	14	1, 4, 5, 6, 7		3	1, 4, 5, 6, 7	14	
02, 52	10	16	1, 4, 5, 6, 7, 8, 9, 11, 13, 14, 15		10	1, 4, 5, 6, 7, 8, 9, 11, 13, 14, 15	16	
03, 53	1	16	6, 7, 8, 9, 14, 15		1	6, 7, 8, 9, 14, 15	16	
04, 54	10	16	1, 4, 5, 6, 7, 8, 9, 11, 12,13, 14, 15		10	1, 4, 5, 6, 7, 8, 9, 11, 13, 14, 15	16	
05, 55	2	1, 10, 15, 16	8		2	1, 8, 10, 15	16	
06, 56	10	9, 11, 13, 14, 15, 16, 17, 18, 19, 20, 21, 22, 23, 24		12	10	1, 2, 3, 4, 5, 6, 7, 8, 9, 11, 12, 13, 14, 15		24

6. NOTES

(This section contains information of a general or explanatory nature that may be helpful, but is not mandatory.)

6.1 Intended use. Microcircuits conforming to this specification are intended for original equipment design applications and logistic support of existing equipment.

6.2 Acquisition requirements. Acquisition documents should specify the following:

a. Title, number, and date of the specification.

b. PIN and compliance identifier, if applicable (see 1.2).

c. Requirements for delivery of one copy of the quality conformance inspection data pertinent to the device inspection lot to be supplied with each shipment by the device manufacturer, if applicable.

d. Requirements for certificate of compliance, if applicable.

e. Requirements for notification of change of product or process to contracting activity in addition to notification to the qualifying activity, if applicable.

f. Requirements for failure analysis (including required test condition of method 5003 of MIL-STD-883), corrective action, and reporting of results, if applicable.

g. Requirements for product assurance and radiation hardness assurance options.

h. Requirements for special carriers, lead lengths, or lead forming, if applicable. These requirements should not affect the part number. Unless otherwise specified, these requirements will not apply to direct purchase by or direct shipment to the Government.

i. Requirements for "JAN" marking.

j. Packaging requirements. (see 5.1)

6.3 Superseding information. The requirements of MIL-M-38510 have been superseded to take advantage of the available Qualified Manufacturer Listing (QML) system provided by MIL-PRF-38535. Previous references to MIL-M-38510 in this document have been replaced by appropriate references to MIL-PRF-38535. All technical requirements now consist of this specification and MIL-PRF-38535. The MIL-M-38510 specification sheet number and PIN have been retained to avoid adversely impacting existing government logistics systems and contractors parts lists.

6.4 Qualification. With respect to products requiring qualification, awards will be made only for products which are, at the time of award of contract, qualified for inclusion in Qualified Manufacturers List QML-38535 whether or not such products have actually been so listed by that date. The attention of the contractors is called to these requirements, and manufacturers are urged to arrange to have the products that they propose to offer to the Federal Government tested for qualification in order that they may be eligible to be awarded contracts or purchase orders for the products covered by this specification. Information pertaining to qualification of products may be obtained from DSCC-VQ, P.O. Box 3990, Columbus, Ohio 43218-3990.

6.5 Abbreviations, symbols, and definitions. The abbreviations, symbols, and definitions used herein are defined in MIL-PRF-38535, MIL-HDBK-1331, and as follows:

C_I ..... Input terminal-to-GND capacitance.
GND ..... Ground zero voltage potential.
T_A ..... Free air temperature.
V_{IC}(pos)..... Positive clamping input to V_{DD}.
V_{IC}(neg) ..... Negative clamping input to V_{SS}.
V_{DD}..... Positive supply voltage.
V_{SS} ..... Negative supply voltage.
I_{SS} ..... Quiescent supply current.

6.6 Logistic support. Lead materials and finishes (see 3.4) are interchangeable. Unless otherwise specified, microcircuits acquired for Government logistic support will be acquired to device class S for National Aeronautics and Space Administration or class B for Department of Defense (see 1.2.2), lead material and finish A (see 3.4). Longer length leads and lead forming should not affect the part number.

6.7 Data reporting. When specified in the purchase order or contract, a copy of the following data, as applicable, will be supplied.

a. Attributes data for all screening tests (see 4.2) and variables data for all static burn-in, dynamic burn-in, and steady-state life tests (see 3.6).

b. A copy of each radiograph.

c. The technology conformance inspection (TCI) data (see 4.4).

d. Parameter distribution data on parameters evaluated during burn-in (see 3.6).

e. Final electrical parameters data (see 4.2d).

f. RHA delta limits.

6.8 Substitutability. The cross-reference information below is presented for the convenience of users. Microcircuits covered by this specification will functionally replace the listed generic-industry type. Generic-industry microcircuit types may not have equivalent operational performance characteristics across military temperature ranges, post irradiation performance or reliability factors equivalent to MIL-M-38510 device types and may have slight physical variations in relation to case size. The presence of this information should not be deemed as permitting substitution of generic-industry types for MIL-M-38510 types or as a waiver of any of the provisions of MIL-PRF-38535.

Military device type	Generic-industry type
01	4006A
02	4014A
03	4015A
04	4021A
05	4031A
06	4034A
51	4006B
52	4014B
53	4015B
54	4021B
55	4031B
56	4034B

6.9 Changes from previous issue. Marginal notations are not used in this revision to identify changes with respect to the previous issue due to the extent of the changes.

Custodians:
Army - CR
Navy - EC
Air Force - 11
DLA - CC

Preparing activity:
DLA - CC

(Project 5962-2080)

Review activities:
Army - MI, SM
Navy - AS, CG, MC, SH, TD
Air Force – 03, 19, 99

NOTE: The activities listed above were interested in this document as of the date of this document. Since organizations and responsibilities can change, you should verify the currency of the information above using ASSIST Online database at http://assist.daps.dla.mil.